Water & Environmental
TECHNOLOGIES

September 29, 2020

Clay Riehl
County Commissioner
Choteau County Courthouse
PO Box 459
Fort Benton, Montana 59442

RE: Abbreviated Work Plan and Budget for Additional Corrective Action at the Petroleum Release at the Choteau County Maintenance Yard, 26th and Main Street, Fort Benton, Montana; Facility ID 08-05931, Release 3645, Work Plan 34099.

Dear Mr. Riehl:

This work plan presents Water & Environmental Technologies' (WET's) proposed approach and budget for corrective actions at the above-referenced Facility, as required in the Montana Department of Environmental Quality (DEQ) Work Plan Request letter dated June 17, 2020.

The proposed scope of work includes bioventing system design, monitoring well installation, groundwater monitoring, bioventing system air monitoring, and project reporting. The objective of this phase of work is to reduce petroleum hydrocarbon concentrations to below Human Health Standards and/or Risk Based Screening Levels (HHS/RBSLs). Given the depth of the contamination, and the challenging physical characteristics of the subsurface, such as the relatively high hydraulic conductivity, reduction of petroleum hydrocarbons by means of a bioventing system can be a relatively low cost/low impact path for promoting biodegradation of smear-zone impacts, removing petroleum and other VOCs from soil gas, and achieving closure for the facility.

WET's approach to complete the required work, except workplan preparation, is detailed below.

Project Management
Project management activities will include routine communication with DEQ throughout the project, scheduling field activities and staff, project invoicing, and meeting with prospective contractors to discuss the scope of work (pre-bid and pre-construction meetings).

Mobilization
WET personnel will mobilize to the Facility approximately 20 times to implement this CAP. The Facility location is provided in **Figure 1**. WET will utilize personnel from our Great Falls office as often as possible to control mobilization costs. When estimating total project costs, WET assumed a 50/50 split between Great Falls and Butte office staff to complete the project.

Health and Safety Plan
WET personnel will prepare a health and safety plan addressing specific safety protocol for the work conducted under this work plan.

Utility Locates

Prior to installing monitoring or bioventing wells, locations will be cleared of utilities through the Montana One Call system and the use of a private utility contractor. GeoSearch Inc. has been selected to conduct the private utility locations. The three additional down gradient wells proposed in this work plan are located on the public right-of-way, however, should locations be contested by local landowners, an alternative location will be discussed with DEQ prior to installation. The existing and proposed wells are shown on **Figure 1**.

Monitoring Well Installation and Construction

The installation of three additional groundwater monitoring wells is proposed to define the downgradient extent of the contamination south and east of the Facility. Proposed locations for the three monitoring wells are shown on **Figure 1**. Soils will be continuously screened using a photoionization detector (PID) and will be characterized using the Unified Soil Classification System (USCS). After the boring is complete, monitoring wells will be constructed with 2-inch, schedule 40 PVC casing and 0.010-inch factory slotted screen installed across the water table, with a total of approximately 10 feet of well screen. Exact screen lengths and intervals will be determined in the field based on observed zones of contamination, lithology, and historical product and water level data. Monitoring wells will be developed following installation using a surge block, submersible pump, and/or buffalo pump. Three bids were solicited for well installation; Boland Construction was the low bidder and will be awarded the work. Subcontractor bids are included as **Attachment A**.

Bioventing System Design Basis

The bioventing system design is based on the results of a pilot test conducted at the site in October 2019 and the 1997 Soil Bioventing: Principles and Practice guidance document: "Principles and Practices of Bioventing Volume II Bioventing Design." A vacuum test was performed during the pilot test to estimate a zone of influence (ZOI). The test was performed by applying a vacuum to well RW-3-3 and measuring the induced vacuum in nearby wells. The results of the pilot test suggest that a ZOI with a 40-ft radius can be expected for each bioventing well in the area. The pilot test also involved a respirometry test. During this test, as a progressively higher vacuum was applied to the extraction well by closing a relief valve plumbed into the system. During the test, the oxygen, carbon dioxide, and volatile organic compound concentrations in the extracted air stream were monitored. After the relief valve was fully closed, the system was shut off, and the air concentrations were monitored as they returned to the initial equilibrium of the system. This test is used to estimate the biodegradation rate in milligrams of hydrocarbons per kilogram soil per day (mg/kg-day). This value describes the rate at which the microbes in the soil can breakdown contamination under an aerobic environment.

According to the guidance document, the slope of the graph of percent oxygen over time during this interval can be used to estimate the oxygen utilization rate (%/day) of the subsurface. Based on the average of three slopes from successful respirometry testing completed during the pilot study, the oxygen utilization rate is estimated to be 3%. Other factors taken into consideration were estimates on soil properties such as gas-filled pore space and bulk density, as well as a stoichiometric mass ratio of hydrocarbons to oxygen. Hexane was used as a surrogate for mass ratios and stoichiometric relationships because it approximated the average physical and chemical behavior of common petroleum contamination. Following Equation 1-2 of the guidance document, it is estimated that the biodegradation rate at this site can be expected to be between 0.21- to 0.64-mg/kg-soil. Combined with the ZOI of 40-ft and an estimated overall contamination thickness of 10-ft, this would result in a contamination removal rate of about 500 to 1600 grams per well per day, or 2 to 6.5-kg removed across the four system wells per day. The range of removal rates is a product of the varying oxygen utilization rate between 1% and 3%. It is also important to note that these equations assume that removal will happen uniformly across the entire ZOI, when in practice the oxygenation and contaminant degradation will be most efficient near the well and will decrease with increased distance from the well.

Bioventing System Installation

The bioventing system will be comprised of four bioventing wells will be located across the center to northeast corner of the Facility parcel. The proposed well locations and their expected zones of influence (ZOI) are displayed on **Figure 1**. These locations have been selected to treat the area exhibiting the greatest groundwater impacts, while repurposing existing product recovery wells to the extent practicable and reducing the need to drill additional wells.

Existing product recovery wells RW3-1 and RW3-2 will be converted into bioventing wells and have total depths of 38-ft and 43-ft, respectively. The bottom ten feet of RW-3-1 and bottom 20-ft of RW-3-2 are screened with 0.020 factory slotted screen.

The proposed two new bioventing wells will have anticipated total depths of 38-ft and a 10-ft screen interval from 28-ft to 38-ft bgs. This screen interval extends 2-3-feet above the historical high groundwater level (30-ft bgs) and 4 feet below the historical low groundwater level (36-ft bgs). Exact screen lengths and intervals will be determined in the field based on observed zones of contamination, lithology, and historical product and water level data. The primary objective during well construction will be to select screened intervals that will provide adequate air flow in the portion of the vadose zone with hydrocarbon impacts, while minimizing short circuiting in un-impacted, shallower zones, where enhanced air flow would not be beneficial.

Wells will be constructed with 4-inch schedule 40 polyvinyl chloride (PVC) well casing and 0.020-inch factory slotted screen. The annular space will be filled with 10-20 silica sand to approximately one foot above the screened intervals and sealed to approximately three to five feet below the surface with hydrated bentonite chips. The upper three to five feet of annulus will be backfilled with unimpacted drill cuttings or silica sand.

Each well will be completed with a 4x4x4-inch PVC T fitting, attached to the well casing and the 4-inch lateral connected to the blower manifold. The top of the T fitting will house a threaded cap should access to the well or water level measurements be required. The cap will also be fitted with a quick connect fitting for pressure readings. The laterals will be trenched to the blower manifold that will be housed inside of a small shed. Trenching and manifold details are provided in **Figure 2**. Typical bioventing well completion details are provided in **Figure 3**. The well heads will be completed with flush monuments and cemented in place. Three bids were solicited for well installation; Boland Construction was the low bidder and will be awarded the work. Subcontractor bids are included as **Attachment A.**

Piping will be installed in a trench, approximately 3-feet deep and 2-feet wide, which will extend from each well to a new remediation shed placed in the northeast corner of the facility lot. Piping will be bedded in appropriate pipe bedding material such as sand, pea gravel, or road mix to at least 6" above the top of the pipe. The remainder of the trench will be backfilled and compacted using the native soils removed during excavation.

A 4-inch PVC manifold header will connect each lateral line to a moisture separator drum followed by the vacuum blower located in the shed. The laterals will be installed at a gradient of approximately 1%, sloping up from the individual wells to the shed. This downward slope into the well will help limit the amount of water that enters the moisture separator drum and improve the longevity of the system. A 4-inch PVC ball valve will be installed on each well leg allowing discreet flow adjustments to individual wells. Sample ports and gauges will be installed on each well leg, the main manifold and the exhaust to allow photoionization detector (PID), vacuum pressure, and flow rate measurements to be collected at several locations. Three bids were solicited for trenching and system construction. M&D Construction,

Inc. was the low bidder and will be awarded the work. Subcontractor bids are included as **Attachment A**.

Field screening using a photoionization detector (PID) and soil characterization using the Unified Soil Classification System (USCS) will be performed for both bioventing wells using samples collected from continuous split spoon sleeves driven in front of the drill auger. After the boring is complete, the wells will be constructed with 4-inch, schedule 40 PVC casing and 0.020-inch factory slotted screen installed across the water table, with an expected total of approximately 10 feet of well screen, as discussed above.

As part of system installation, and new single-phase electrical service will be installed on-site to provide power to the bioventing system shed. Three bids were solicited for electrical installation and are included as **Attachment A**. United Electric was the low bidder and will be awarded the work.

Air containing condensate from the bioventing wells will enter a condenser/separator (knock-out drum) before entering the bioventing blower. The system will be installed and operated such that the expected amount of condensate encountered is minimal.

The proposed vacuum blower is a Republic Manufacturing HRC 501 regenerative vacuum blower (**Attachment B**), capable of producing 195-cubic feet per minute (cfm) at a vacuum pressure of 60-inches of water at 60 Hz. Based on data collected during the bioventing pilot test conducted in October 2019, these operating parameters will result in a zone of influence that captures the residual petroleum plume.

Investigation Derived Waste (IDW)

Drill cuttings will be continuously screened for evidence of petroleum contamination using a sheen test and a photoionization detector (PID) and the heated headspace method. If cuttings display evidence of petroleum contamination including visible sheen, discoloration, and/or elevated PID readings (>50 ppm), soils will be containerized in 55-gallon drums and one sample per drum will be collected to characterize soil for disposal. Once soils are characterized, WET will request permission for landfill disposal. Excess excavation spoils will be stockpiled onsite and will undergo field PID screening. If all results of field screening are below 50 parts per million (ppm), the material will be land spread on site. If any results of field screening are above 50 ppm, the material will be placed on plastic sheeting and either bermed so that runoff will not occur or covered with a tarp. One five-point composite sample will be collected for each 400 cubic yards of material. IDW will be analyzed for EPH, VPH, and lead scavengers. Following receipt of analytical results, the material will be characterized and scheduled for disposal at an appropriate facility. Purge water generated from well development and groundwater monitoring will be disposed of in accordance with the DEQ purge water disposal guidance. The site is located on pervious loose gravel and wells containing free product will not be sampled; therefore, purge water will be discharged to the ground. Should conditions exist that preclude purge water disposal (i.e. impervious ground), purge water will be containerized and properly disposed of.

Well Survey

Newly installed bioventing and monitoring wells will be surveyed for location and top-of-casing elevations by a licensed surveyor. The location coordinates will be presented in the 1983 North American Datum (NAD83), Montana State Plane with units of international feet. Elevations will be expressed in units of feet above sea level (AMSL) relative to the 1988 North American Vertical Datum (NAVD88).

Bioventing Startup and Optimization, System Checks, Operation and Maintenance

WET will conduct monitoring of the remediation system during startup, including both pre-startup baseline monitoring and subsequent quarterly routine system monitoring. Monitoring activities will include a combination of field and laboratory measurements to establish a baseline to evaluate system performance and future monitoring needs.

Bioventing system monitoring will take place on the following schedule:

- Baseline laboratory air sampling conducted immediately after system optimization, along with PID, vacuum, and flow rate measurements.
- Quarterly checks thereafter, with laboratory air sampling completed each quarter.

Flow and velocity at all sample locations will be measured using a handheld air velocity meter. Concentrations of volatile organic compounds (VOCs) in the vapor stream will be collected using a Mini Rae 3000 Photoionization Detector (PID) at all locations during regular O&M events. Vacuum, pressure, and temperature readings will be measured using inline factory gauges.

In addition to laboratory air sample collection and routine PID, vacuum, and flow measurements, one respirometry testing event is proposed following approximately one year of continuous system operation. Respirometry measurements will be collected using the procedures outlined in the bioventing pilot test work plan, which was submitted to DEQ on February 7, 2019. Data acquired from respirometry measurements will be used to assess the performance of the bioventing system and may aid in estimating the time to release closure and/or determining other future remedial actions at the site.

Operation and maintenance costs are estimated for one year following the initial year of operation as the system will continue to run and be maintained during the reporting period and for the duration of any subsequent workplan request, submittal, approval, and fund obligation.

Bioventing System Air Monitoring

An air sample will be collected from the system vapor stream immediately after startup and quarterly thereafter for one year from the combined influent line, likely between the vacuum blower and the discharge stack. The sample will be collected in a certified clean Summa canister and submitted to Pace Laboratory in Minneapolis, MN for analysis of the following methods:
3C-Fixed Gas %, TO-3, TO-3M (Methane), TO-13 (PAH), TO-14, TO-15 (Full VOCs), and TO-15 Short List. These analyses will provide results for a wide range of volatile organic compounds, including major BTEX constituents, and lead scavengers.

Groundwater Monitoring and Water Level Measurements

Following installation and development of wells, WET personnel will conduct a baseline groundwater monitoring event of existing facility wells MW-7, MW-8, MW-11, MW-13, MW-14, MW-16, MW-17, MW-18, MW-21, MW-25R, MW-26, MW-30 along with the three proposed monitoring wells (MW-32, 33, and 34). Monitoring will include measuring depth-to-water and depth-to-product (if present) of all facility wells and collecting groundwater samples from the monitoring wells specified above. If product is detected in a well, that well will not be sampled. Samples will be collected using a 12-volt submersible pump and disposable polyethylene tubing. Groundwater field parameters including temperature, dissolved oxygen, pH, specific conductivity, and oxidation reduction potential will be measured during purging, and once parameters stabilize, a groundwater sample will be collected in laboratory-supplied bottles and analyzed for volatile petroleum hydrocarbons (VPH), extractable petroleum hydrocarbons (EPH) and the lead scavengers ethylene dibromide and 1,2-dichloroethane. Samples will be submitted to Energy Laboratories in Helena, Montana.

WET personnel will conduct a total of three groundwater monitoring events: one prior to bioventing system startup (baseline), and two semiannual groundwater monitoring events following bioventing system startup. The first semi-annual monitoring event will be conducted approximately 6 months after the bioventing system startup, and the second event will be conducted approximately 12 months after the bioventing system startup.

Project Reporting

Within 90 days of receipt of the last laboratory analytical results, WET will submit a Standardized Generic Applications Report (Report_AR-07) that summarizes the field activities discussed in this work plan. The report will contain:

- a discussion of project goals and how the system is achieving those goals;
- discussion for system installation and how the system could be improved or optimized;
- tabulated PID and soil sampling results;
- tabulated bioventing effluent air sample results;
- tabulated new and historical groundwater sampling results;
- a discussion of follow-up reports that will be necessary to report on the remediation system's effectiveness; and
- a discussion of a path to closure for the release.

Schedule

WET will begin implementing this work plan upon DEQ approval and funds obligation by the Petroleum Tank Release Compensation Board and will notify DEQ prior to conducting the first field activities.

Budget

The costs to implement this work plan are estimated to be $162,391.26. A detailed cost estimate is included as **Attachment C**.

If you have any questions or concerns regarding this work plan or its implementation, please contact me at (406) 782-5220 or lsurratt@waterenvtech.com.

Sincerely,

Laura Surratt, MS, EI
Project Engineer

Cc Bob Stevenson, Choteau County Sanitarm

Leeson, A., & Hinchee, R. E. (1997). Soil bioventing: Principles and practice (No. BATT-0024/XAB). Battelle, Columbus, OH (United States).

Figures:

Figure 1	Site Location and Bioventing System Layout
Figure 2	Bioventing Lateral Layout and Shed Construction
Figure 3	Typical Biovent Well Completion Details

Attachments:

Attachment A	Vendor and Subcontractor Cost Estimates
Attachment B	Blower Specifications
Attachment C	Project Cost Estimate

Figures

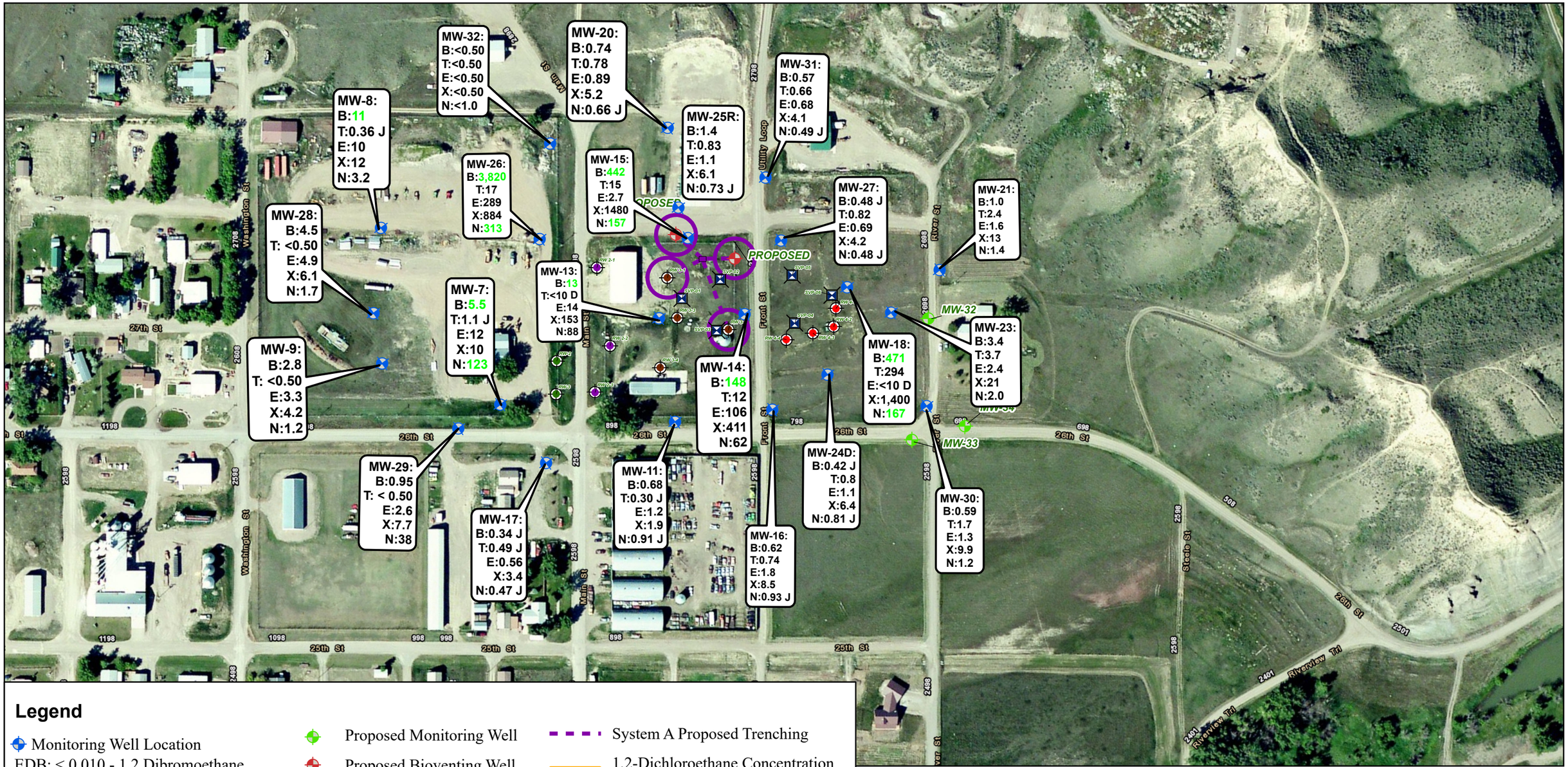

Legend

- Monitoring Well Location
- EDB: < 0.010 - 1,2 Dibromoethane Concentration
- 1,2 DCA: <5.0 -1,2 Dichloroethane Concentraion
- 5.5 - Green text indicates analyte concentration exceeds the RBSL
- J- Indicates an estimated value, the analyte was present but less than the reporting limit
- < - indicates analyte not detected at indicated reporting limit
- Proposed Monitoring Well
- Proposed Bioventing Well
- Product Recovery System #1
- Product Recovery System #2
- Product Recovery System #3
- Product Recovery System #4
- Vapor Point
- System Shed Location
- System A Proposed Trenching
- 1,2-Dichloroethane Concentration Contour (µg/L.)
- System A Zone of Influence

Notes:
Concentrations reported in µg/L.

0 125 250 500 Feet

Water & Environmental TECHNOLOGIES

SITE LOCATION AND BIOVENTING SYSTEM LAYOUT

Fort Benton, MT, Chouteau County

Job#: CHOTOM01

Date: 9/24/2020

Path: \

FIGURE 1

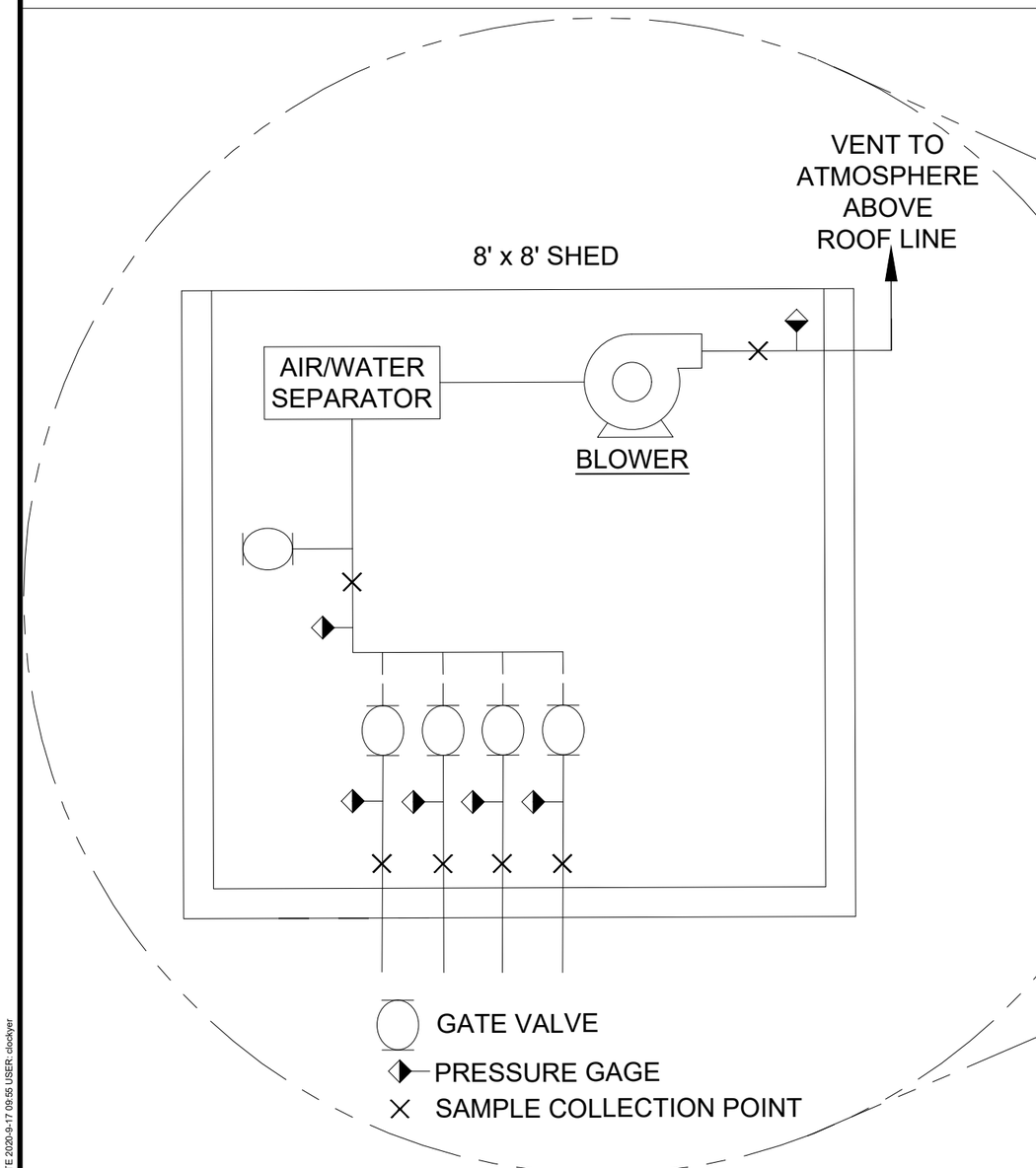

1 BIOVENT SYSTEM
Scale: NTS

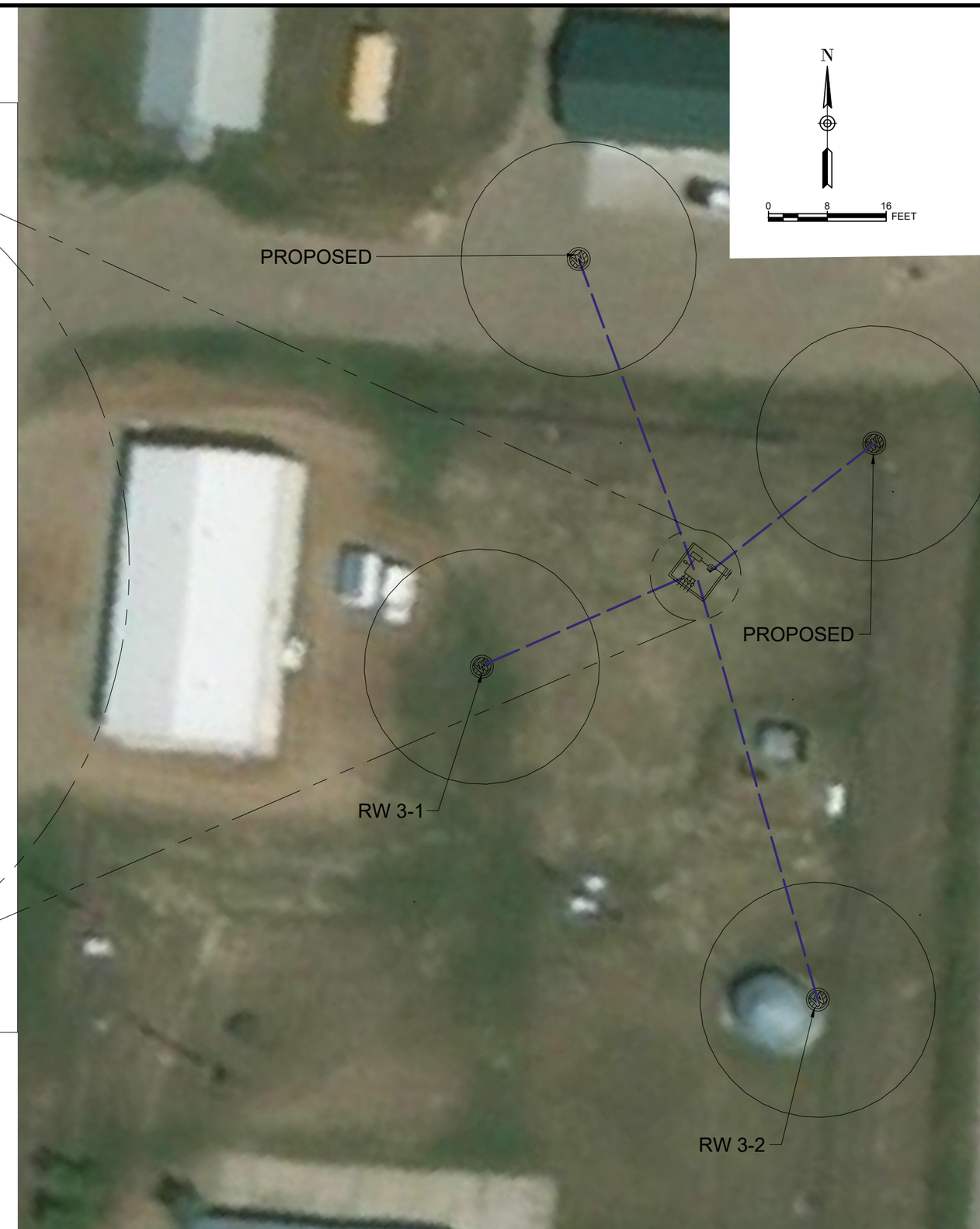

No.	Description	Date	Drawn By

COPYRIGHT 2020
Water & Environmental Technologies PC hereby reserves our common law copyright in this document and the ideas and designs incorporated herein as an instrument of professional service which shall not be used in whole or part for any other projects or other use without our express written authorization.

Water & Environmental TECHNOLOGIES
480 E. Park Street
Butte, MT 59701
(406) 782-5220
WATERENVTECH.COM

BIOVENTING LATERAL LAYOUT AND SHED CONSTRUCTION

PROJECT NAME: BIOVENT SYSTEM
LOCATION: FORT BENTON, MT
FILE NO. SC-FI01-CHOTOMO1.dwg

JOB NO:	CHOTOMO1
DATE:	9/17/20
DRAFTER:	CL
CHECKED BY:	----

SHEET
Figure 2

M:\CHOTOMO1\CAD\SC-FI01-CHOTOMO1.dwg PLOT DATE 2020-9-17 09:55 USER: clockyer

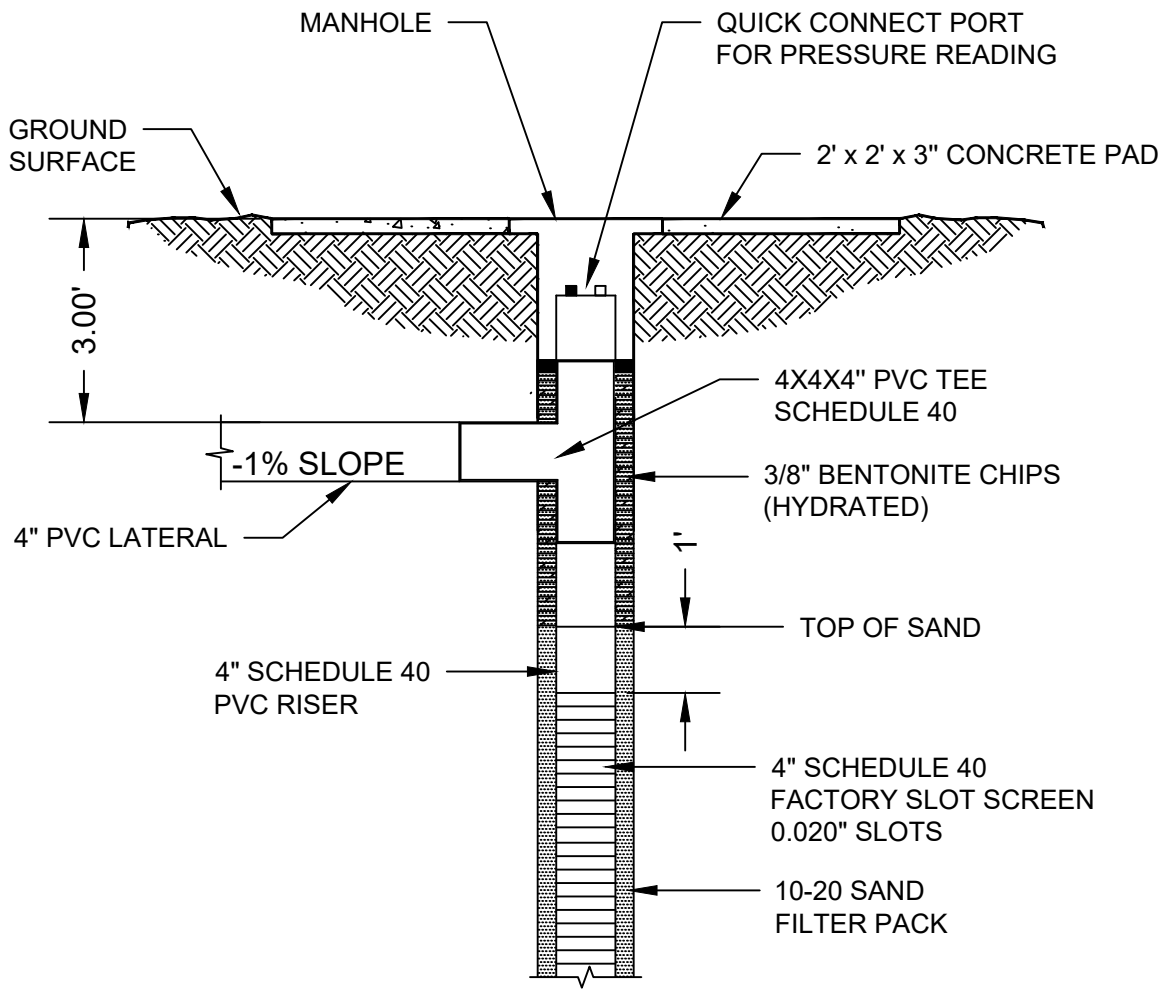

1 BIOVENT WELL TYP.

Scale: NTS

M:\CHOTOMO01\CAD\SC-FI01-CHOTOMO1.dwg PLOT DATE 2020-9-17 09:06 USER: clockyer

Water & Environmental
TECHNOLOGIES
480 E. Park Street
Butte, MT 59701
(406) 782-5220
WATERENVTECH.COM

TYPICAL BIOVENT WELL
COMPLETION DETAILS

PROJECT NAME: BIOVENT SYSTEM
LOCATION: FORT BENTON, MT
FILE NO. SC-FI01-CHOTOMO1.dwg

JOB NO:	CHOTOMO1
DATE:	9/17/20
DRAFTER:	CL
CHECKED BY:	----

SHEET
F3

Attachment A - Vendor and Subcontractor Cost Estimates

Soil Boring/Monitoring Well Installation Unit Cost Worksheet

TASK		UNIT COST		NUMBER OF UNITS		TOTAL COST
Mobilization/Demobilization (1)						
Mobilization/Demobilization: Drilling Rig	$	2.00	/mile	80	$	160.00
Mobilization/Demobilization: Support Vehicle	$	2.50	/mile	320	$	800.00
Soil Boring Installation (2)						
Drilling (0'-50' range per boring)	$	34.00	/foot	200	$	6,800.00
Drilling (50'-100' range per boring)			/foot		$	-
Other (please specify) _____					$	-
Monitoring Well Installation (3)						
Drilling (0'-50' range per well)	$	30.00	/foot	200	$	6,000.00
Drilling (50'-100' range per well)			/foot		$	-
Other (please specify) _____					$	-
Drilling Standby (4)						
-prior approval needed	$	125.00	/hour		$	-
Well Development (5)						
Well Development	$	150.00	/hour		$	-
Monitoring Well Abandonment (6)						
Abandonment	$	350.00	/well		$	-
Lodging may only be paid at actual costs when documented by receipts.						
Per Diem						
Lodging: number of individuals =	2	$ 125.00	/person per day	0	$	-
Food: number of individuals =	2	$ 23.00	/person per day	0	$	-
(Breakfast 5.00, Lunch 6.00, Dinner 12.00)						
			TOTAL PROJECT EXPENSE		**$**	**13,760.00**

D.O.T. Drums (Approximately) _____ $95.00 _____ 15 ######## 1,425.00

Additional Conditions/Comments/Costs:

Drill 5 soil borings to 40' and construct 2" and 4" wells at Fort Benton. Transport and dispose of drill cuttings (if requested) after receiving nonhazordous waste manifest. $1,350.00.

If you require assistance, call 406-841-5090.

Submit completed form to:

Petroleum Tank Release Compensation Board PO Box 200902, Helena MT 59620-0902

Petroleum Tank Release Compensation Board

Soil Boring/Monitoring Well Installation Unit Cost Worksheet

Contractor Information

Company Name: Boland Drilling
Address: 4701 N Star Blvd
City, State, Zip: Great Falls, MT 59405
Cost Estimator: Chris Boland — Phone: 406-761-1063
Signature: — 7/17/2027

Project Information and Specifications

Holiday Station — Facility ID #
Reserve Street and South Avenue W — Release #
Missoula — WP ID #

Type of Drilling Equipment

Hollow-Stem Augers	x
Air Rotary	
Direct Push	
Other (please specify)	

Soil Boring

Number of Borings	5
Boring Diameter (inches)	8&10
Depth (per boring - ft)	40

Surface: Concrete Asphalt Barren
Soil Disposal: Onsite Stockpile Drums
Abandonment: Bentonite Soil Cuttings

Soil Sampling

Continuous Soil Sampling	
Interval Soil Sampling (specify interval)	
No Sampling	

Monitoring Well Specifications

Number of Wells	5
Surface: Concrete Asphalt Barren	
Depth (per well)	40
Estimated Depth to Groundwater (ft)	
Boring Diameter (inches)	8&10
Casing Diameter and type (inches)	2"& 4" pvc

Surface Completion: Flush Mount Aboveground

Cost Estimate Explanation:

(1) Mobilization/Demobilization: Includes all costs and mileage to transport equipment, materials, and personnel to and from the site location. More than one mobilization event of either the drilling rig or support vehicle will require justification and pre-approval by the DEQ-PRS and Board staffs. This item should be estimated on a per mile unit rate

(2) Soil Boring Installation: Includes all costs (labor, equipment, and materials) to drill, collect soil samples and abandon soil borings, as well as decontaminate equipment. Drilling costs should be estimated using a per foot unit rate. Unit cost should include handling of contaminated soil by stockpiling or placing in drums. Assume level "C" personal protective equipment.

(3) Monitoring Well Installation: Includes all costs (labor, equipment, and materials) to drill, collect soil samples, and complete monitoring well to specifications and according to Montana Well Drillers Board rules, as well as decontaminate equipment. Drilling costs should be estimated using a per foot unit rate. Unit cost should include handling of contaminated soil by stockpiling or placing in drums. Assume level "C" personal protective equipment.

(4) Drilling Standy: Drilling standby should be estimated on an hourly basis. Prior approval and justification for accumulating standby time is needed prior to billing.

(5) Well Development: Includes all costs (labor, equipment, and materials) to develop monitoring wells. This task should be estimated using a per well unit rate.

(6) Monitoring Well Abandonment: Includes all costs (labor, equipment, and materials) to properly abandon a well location according to the Montana Well Drillers Board rules. Abandonment costs should be estimated using a per well unit rate.

O'KEEFE DRILLING
Environmental

P.O. Box 3810 - Butte, MT 59702
Office: (406) 494-3310 Fax: (406) 494-3301
Email: info@okeefedrilling.com

Client:	Water and Environmental Technologies	Date:	16-Jul-20
Attention:	Tim Driscoll	Phone:	406-299-9854
Project:	Fort Benton	Cell:	406-498-1568

PROJECT SPECIFICATIONS:

Type of Rig:	Mobile B-61 Auger	**Number of Wells:**	3
Location:	Fort Benton	**Expected Footage:**	40
Formation:	Sands/small gravels	**Screen Length:**	15
Sampling:	Yes, continuous	**Well Size:**	2
Decontamination:	Yes	**Screen Size:**	0.01
Other Details:	Flushmount	**Number of Wells:**	2
		Expected Footage:	40
		Screen Length:	15
		Well Size:	4

Bid for Soil Boring/Monitor Well Installation

Unit Cost Worksheet

	Task			Unit Cost		Number of Units		Total Cost
Mobilization/Demobilization								
	Drill Rig: Butte		$	2.00	Miles	200	$	400.00
	Support Vehicle/Crew Travel: Butte		$	1.50	Miles	200	$	300.00
	Interim travel		$	1.50	Miles	200	$	300.00
Per Diem		*Crew Members*						
	Motel	2	$	115.00	Per Person Per Day	4	$	920.00
	Food	2	$	40.00	Per Person Per Day	5	$	400.00
Soil Boring Installation								
8.25"	Drilling 0-50 ft range		$	28.00	Per Foot	120	$	3,360.00
10.25"	Drilling 0-50 ft range		$	34.00	Per Foot	80	$	2,720.00
Monitor Well Installation								
2"	Drilling 0-50 ft range		$	30.00	Per Foot	120	$	3,600.00
4"	Drilling 0-50 ft range		$	38.00	Per Foot	80	$	3,040.00
Drilling Standby & Safety Meeting								
	Prior Approval Needed		$	180.00	Per Hour		$	-
				Total Project Expenses			**$**	**15,040.00**

***Client is responsible for any line locates. Locate number can then me given to O'Keefe Drilling who then will request a ticket default.

****This bid is subject to change as warranted when the addition of prior unexpressed need for additional certifications, medical monitoring, sampling, containerization or other unforeseen change in the scope of work.

HAZ TECH Drilling, Inc.

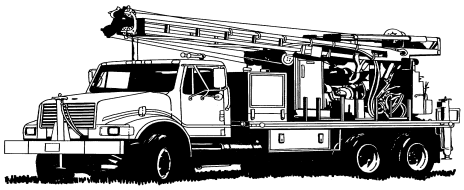

P.O. Box 30622
2910 Hannon Road, Suite #6
Billings, MT 59107
Phone: 406-896-1164 or 800-359-1502
Fax: 406-896-1462

Proposal

TO: Water & Environmental Technologies
ATTN: Tim Driscoll
480 E Park Street, Suite 200
Butte, MT 59701
Ph: 406-782-5220

DATE: 8/13/2020
Revised
PROJECT: Ft. Benton, MT

Description:
3-2" wells to 40' with 15' of .010 screen and flush mount covers. 2-4" wells to 40' with 15' of .010 screen and flush mount covers. Wells are sampled continuously.

TERMS: Net 30 Days

	UNITS EST.	UNIT PRICE	AMOUNT EST.
**********	**********	**********	**********
Mob/ Demob, Per Mile	500	$3.25	$1,625.00
Support Truck, Per Day	5	$150.00	$750.00
Perdiem, Per Crew Day	5	$61.00	$305.00
Lodging, Per Night, Estimated	4	$250.00	$1,000.00
Auger Drilling, Per Ft	200	$21.50	$4,300.00
Well Installation, Per Ft	120	$23.50	$2,820.00
Well Installation, Per Ft	80	$36.75	$2,940.00
Flush Mount Vaults 8" X 12", Each	3	$100.00	$300.00
Flush Mount Vaults 12" X 12", Each	2	$150.00	$300.00
Drums, Each	15	$100.00	$1,500.00
			**********
	ESTIMATED TOTAL:		$15,840.00

Notes:
1) Client is responsible to clear location of utilities.
2) Client is responsible for disposal of drill cuttings.
3) Client will be invoiced only the amounts used.
4) We assume that site is accessible by truck mount drill rig.

Proposal By: Paul Bray

M&D Construction, Inc. 4415 18th Ave. North Great Falls MT 59405
406.452.8825 phone 406.452.0144 fax mdconstruct1@bresnan.net

August 11, 2020

Tim Driscoll
1321 8th Ave. N. Ste. 201-A
Great Falls, MT 59401

Subject: Fort Benton Remediation

M&D Construction is pleased to provide a quote for the following scope of work for the Fort Benton Remediation Trench Project:

1. Mobilization
2. Excavate/Lay/Backfill 330 LF of 4" Schedule 40 Pipe - 2' Wide x3' Deep Trench
3. Set Shed and Cut Hole for Pipe Penetrations

TOTAL PROPOSAL = $12,650.00

Notes:

1. Proposal does not include any compaction testing or quality control testing.
2. Layout provided by others.

Thank you for the opportunity to provide our services. I look forward to hearing from you.

Best Regards,

Josh Picking

Josh Picking

Tim Driscoll

From: Joe Horner <mrte.joe@gmail.com>
Sent: Thursday, August 13, 2020 5:24 PM
To: Tim Driscoll
Subject: RE: Fort Benton Remediation Trench Project.

Follow Up Flag: Follow up
Flag Status: Flagged

Tim my price to do this work would be 13500.00
Call if you have any questions.
thanks

Joe

From: Tim Driscoll <tdriscoll@waterenvtech.com>
Sent: Thursday, August 13, 2020 2:02 PM
To: mrte.joe@gmail.com
Subject: RE: Fort Benton Remediation Trench Project.

From: Tim Driscoll
Sent: Monday, August 10, 2020 11:27 AM
To: mrte.joe@gmail.com
Subject: Fort Benton Remediation Trench Project.

Hey Joe,
I spoke to your admin assistant and she gave me your email. I was wondering if you could provide me with a bid for the following work in Fort Benton.

Attached is a working map of the area we will be working on. The purple lines are the trench lines we will need to dig. The project design is still in progress but we will need 4 trenches, all total around 330 ft of 2 wide by 3ft deep trenchs, from the wells into the shed. The lateral will need to be at approximately a 1% slope from the well up to into our shed, similar to the one in the photo below. Then they will need to 90 up and stub out of the ground.

Can you provide me with a quote for the following

Tasks:
- Excavate trenches and lay laterals at approximately 1% slope.
- Backfill and compact
- Lift shed onto laterals sticking out of ground

Materials
- Approximately 330 ft of sch 40 4 inch PVC
- 4 4in slip T PVC fittings
- 4 4in slip 90 fittings.

The shed will be purchased and delivered by us on a separate task. Ours will be 8x8 ft

Give me a call or email with any questions. Have a good weekend!
Tim

Water & Environmental TECHNOLOGIES

Tim Driscoll, MS, EI

Staff Hydrogeologist

P: (406) 299-9854
C: (406) 498-1568
tdriscoll@waterenvtech.com

CAUTION: This email originated from outside of the organization. Do not click links or open attachments unless you recognize the sender and know the content is safe.

Tim Driscoll

From: Chris Sullivan <csully38@gmail.com>
Sent: Monday, August 31, 2020 8:59 AM
To: Tim Driscoll
Subject: WET FORT BENTON

WET FORT BENTON

MOBE $3500
Rooms meals $3000
Piping and materials $2500
Excavate and labor $9000
Attention Tim
(All prices subject to change for weather and or prevailing wages or utility crossings thanks)

Chris Sullivan
CAUTION: This email originated from outside of the organization. Do not click links or open attachments unless you recognize the sender and know the content is safe.

• Residential
• Commercial
• Industrial

(406) 452-0550
2127 Vaughn Road
Great Falls, MT 59404
Fax (406) 727-3738
E-mail: service@unitedelectricnow.com
www.unitedelectricnow.com

Fort Benton

Project for W.E.T

Scope of Work:

Provide and install electrical conduit, wire, light, service outlet, breakers for a new blower for a separator system. Trenching to be don't by prime contractor.

For the described above, completing all as defined in the specifications, we propose the sum

Of: Three thousand, six hundred dollars.....$3,600.00
Payment to be made as follows: 30 days net, unless other agreements have been made in Advance.
All material used in this contract are guaranteed to be as specified * all work done in a clean and neat fashion.

Accepted by,
Date:

United Electric LLC

Date:8-26-2020

Proposed by Tory

This Quote is not valid if not accepted within 30 days

"Your Local Electrician"

700 Dewey Blvd.
Suite B
Butte, MT 59701

Bid

DATE	NUMBER
8/26/2020	2079

Bid Prepared For:

WET: Fort Benton

trademark electric
406-782-6698

PROJECT

Fort Benton

DESCRIPTION	QTY	COST	TOTAL
WET- Fort Benton			
Labor, Materials, Equipment and Travel Expenses for Installation of Electrical Circuitry in Blower Shed		4,750.00	4,750.00
*Does Not Include Power Feeds Going to Shed			

Thank you for the opportunity to bid this project.

TOTAL $4,750.00

From:	Tim Driscoll
To:	"duke@cascadelectric.com"
Subject:	RE: Fort Benton Petrofund Job
Date:	Wednesday, August 26, 2020 12:10:00 PM
Attachments:	image001.png

Hey Duke,
I'm just following up on the bid for the Fort Benton Project.
Do you need any more info from us?
Thanks,
Tim

From: Tim Driscoll
Sent: Wednesday, August 19, 2020 11:38 AM
To: 'duke@cascadelectric.com' <duke@cascadelectric.com>
Subject: FW: Fort Benton Petrofund Job

Hey Duke,
Thanks for taking my call. Attached are two documents. The first is a spec sheet of the blower we need installed (the 501 series) and the second is a working map of where the shed will be located. This is at the country shops up on the corner of 26th and main.

We will have the blower, shed, and piping installed ourselves, and we will have the electrical service trenched from the building to the shed. We would need you guys to hook into the building's power, and wire up the blower in the shed as well as a basic service light, and a power outlet.

If you could provide me with a rough cost estimate on what you think this would take, that would be great.

Let me know if you need more info.

Thanks,
Tim

Water & Environmental TECHNOLOGIES
Tim Driscoll, MS, EI
Staff Hydrogeologist
P: (406) 299-9854
C: (406) 498-1568
tdriscoll@waterenvtech.com

Attachment B – Blower Specifications

HRC 500/501/600/700

REGENERATIVE BLOWERS

Republic offers a complete line of regenerative blowers for high vacuum or compressed air applications in both horizontal and vertical mounted positions. TEFC motors are rated for 50/60 Hz operation and are cUL, UL, and CE certified. The impeller is directly connected to the motor shaft, providing powerful air force without undue friction. The bearings are outside the compression chamber, ensuring maximum operational reliability under high differential pressure. Constructed in robust die-cast aluminum, this low-maintenance, oil-free design provides continuous, dependable service to our customers.

PERFORMANCE

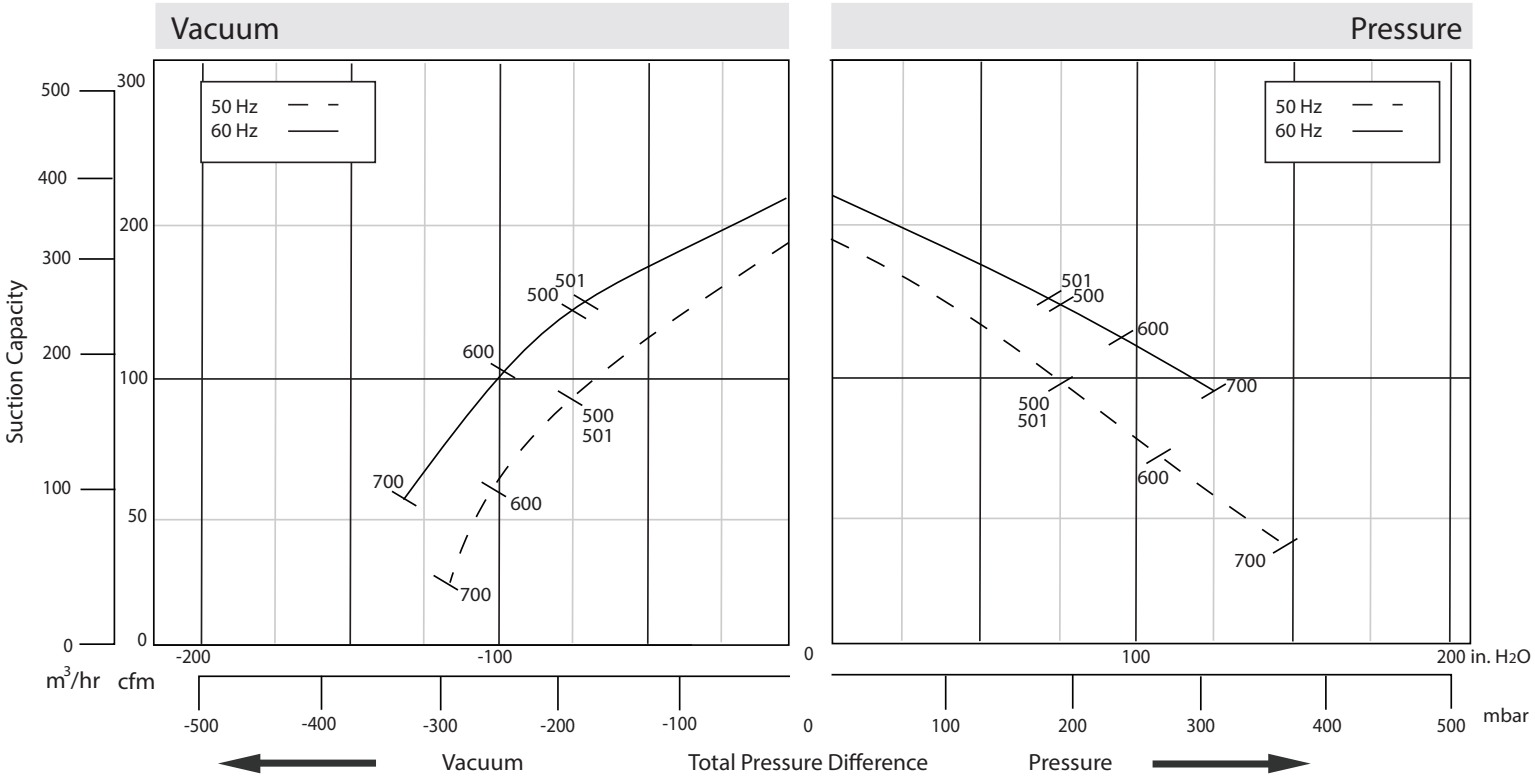

Model	Phase	Frequency (Hz)	Air flow (CFM/m³/hr)	Rated Vacuum (in. H_2O/mbar)	Rated Pressure (in. H_2O/mbar)	Motor (HP/kW)	Voltage (V)	Current (A)	Sound Level (dB)	Weight (lb/kg)
HRC 500	3	50	187/318	76/190	76/190	3.0/2.2	200-240 △/345-415 Y	9.7 △/5.6 Y	69	68/31
		60	221/376	76/190	76/190	3.4/2.5	220-275 △/380-480 Y	10.3 △/6.0 Y	72	
HRC 600	3	50	187/318	104/260	108/270	4.0/3.0	200-240 △/345-415 Y	12.5 △/7.2 Y	69	79/36
		60	221/376	96/240	92/230	4.6/3.4	220-275 △/380-480 Y	12.6 △/7.3 Y	72	
HRC 700	3	50	187/318	116/290	132/330	5.4/4.0	200-240 △/345-415 Y	17.3 △/10.0 Y	69	88/40
		60	221/376	128/320	124/310	6.2/4.6	220-275 △/380-480 Y	17.1 △/9.9 Y	72	
HRC 501	1	50	187/318	76/190	76/190	3.0/2.2	220	15.5	72	66/30
		60	221/376	72/180	72/180	3.4/2.5	220	15.5	74	

The performance curves are based on air at a temperature of 59 °F and an atmospheric pressure of 29.91 inch Hg with a tolerance of +/-10%. The total pressure differences are valid for inlet and ambient temperatures up to 77 °F. Suction capacity relates to inlet conditions. Pressure capacity relates to atmospheric conditions. For other conditions please contact Republic. Three phase motor tolerances are +/-10% for fixed voltage motors and +/-5% for voltage range motors. Single phase machines are designed with a +/-5% tolerance. The frequency tolerance is +/-2% maximum.

©Republic Manufacturing

APPROXIMATE DIMENSIONS

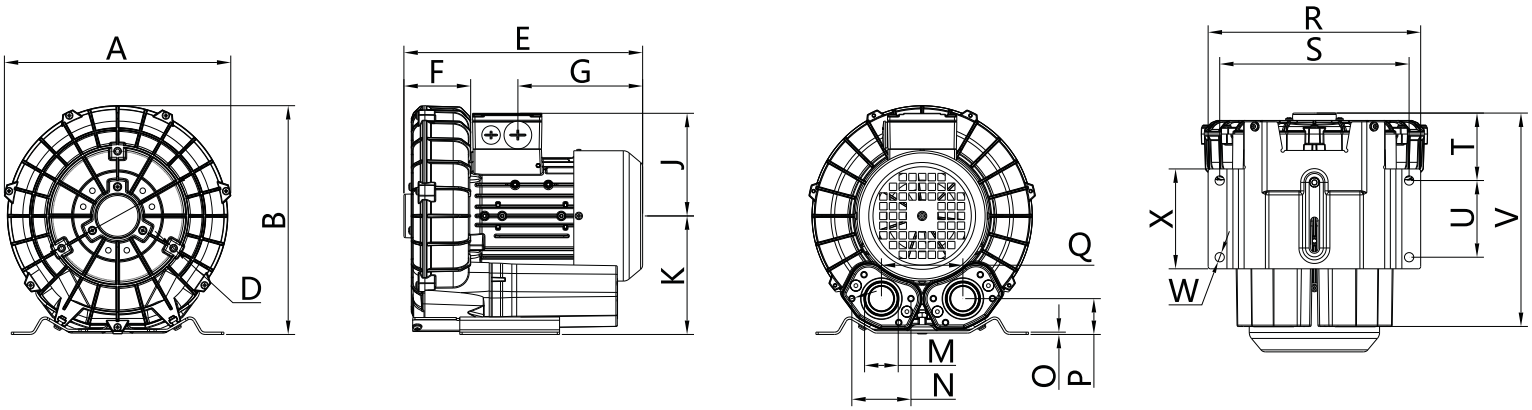

Model	Unit	A	B	D	E	F	G	J	K	M	N	O	P	Q	R	S	T	U	V	W
HRC 500	in	15.04	16.54	M10	14.84	5.12	7.48	5.04	7.68	2.00	3.27	0.18	2.00	7.09	12.80	11.42	4.29	5.51	13.07	0.59
	mm	382	420		377	130	190	128	195		83	4.5	51	180	325	290	109	140	332	15
HRC 600	in	15.04	16.54	M10	16.10	5.12	7.40	5.31	7.68	2.00	3.27	0.18	2.00	7.09	12.80	11.42	4.29	5.51	13.07	0.59
	mm	382	420		409	130	188	135	195		83	4.5	51	180	325	290	109	140	332	15
HRC 700	in	15.04	16.54	M10	16.10	5.12	7.40	5.31	7.68	2.00	3.27	0.18	2.00	7.09	12.80	11.42	4.29	5.51	13.07	0.59
	mm	382	420		409	130	188	135	195		83	4.5	51	180	325	290	109	140	332	15
HRC 501	in	15.04	16.54	M10	14.84	5.12	7.48	5.04	7.68	2.00	3.27	0.18	2.00	7.09	12.80	11.42	4.29	5.51	13.07	0.59
	mm	382	420		377	130	190	128	195		83	4.5	51	180	325	290	109	140	332	15

Available Options

All Republic Regenerative Blowers are available in pre-assembled kits for either pressure or vacuum applications. These kits include an inlet filter, gauge and relief valve, and are factory tested prior to shipment. Optional items for these kits include check valve, and tube adaptor; washdown motors, explosion proof motors, or other specialty motors; noise enclosures; and control panels such as VFD's, PLC's, or starter panels.

VACUUM KIT

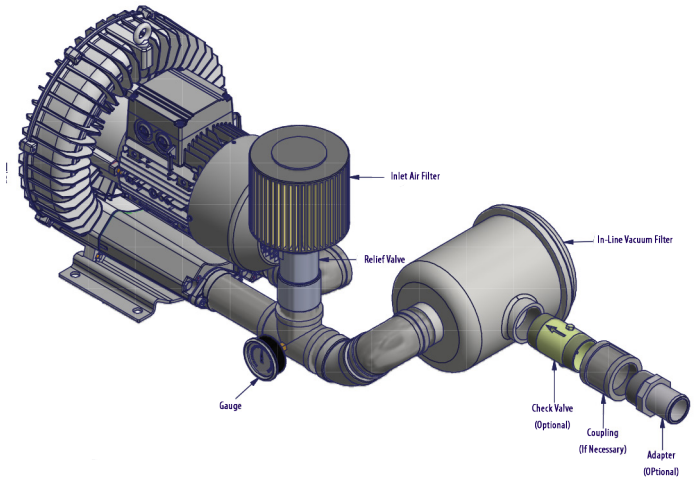

PRESSURE KIT

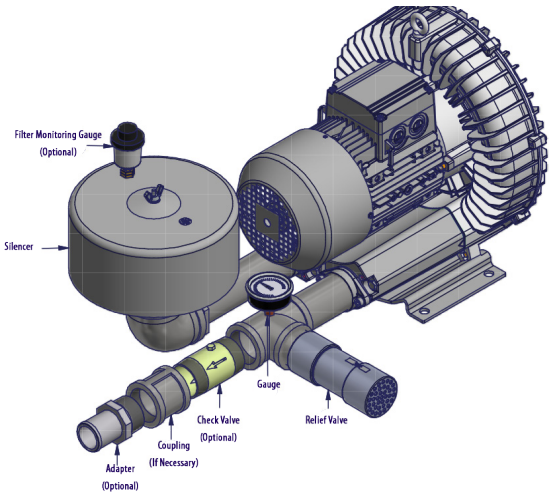

REPUBLIC MANUFACTURING

5131 Cash Road, Dallas, TX 75247, USA
800.847.0380 • info@republic-mfg.com • republic-mfg.com

©Republic Manufacturing • Revised 20181218

Attachment C – Project Cost Estimate

Water & Environmental TECHNOLOGIES

Project Cost Estimate
24-Sep-20

Choteau County Maintenance Yard
26th and Main Street, Ft Benton
Facility ID 08-05931, Release 3645,
Work Plan 34099

TASK DESCRIPTION	PRICE	UNITS	QTY	PRICE
TASK 1. Project Management				
Project Engineer	$125.00	HOUR	100	$12,500.00
		TASK 1 SUBTOTAL:		**$12,500.00**
TASK 2. Work Plan Preparation (CAP-AC-07)				
Senior Engineer	$135.00	HOUR	3	$405.00
Project Engineer	$125.00	HOUR	14	$1,750.00
Staff Engineer	$108.00	HOUR	42	$4,536.00
GIS Specialist	$97.00	HOUR	8	$776.00
		TASK 2 SUBTOTAL:		**$7,467.00**
TASK 3. Mobilization (20 trips)				
Staff Engineer (Butte)	$108.00	HOUR	80	$8,640.00
Mileage (Butte)	$0.575	MILE	4000	$2,300.00
Staff Engineer (Great Falls)	$108.00	HOUR	80	$8,640.00
Mileage (Great Falls)	$0.575	MILE	900	$517.50
		TASK 3 SUBTOTAL:		**$20,097.50**
TASK 4. Health and Safety Plan				
Project Engineer	$125.00	HOUR	1	$125.00
Staff Engineer	$108.00	HOUR	4	$432.00
		TASK 4 SUBTOTAL:		**$557.00**
TASK 5. Utility Locates				
GeoSearch Services	$1,183.00	LUMP	1	$1,183.00
Subcontractor Markup	7%	LUMP	1	$82.81
Staff Engineer	$108.00	HOUR	4	$432.00
		TASK 5 SUBTOTAL:		**$1,697.81**
TASK 6. Well Installation (5 wells)				
Boland Construction	$14,250.00	LUMP	1	$14,250.00
Subcontractor Markup	7%	LUMP	1	$997.50
		TASK 6 SUBTOTAL:		**$15,247.50**
TASK 7. Field Work (Drilling/Trenching Oversight, manifold construction)				
Staff Engineer	$108.00	HOUR	90	$9,720.00
		TASK 7 SUBTOTAL:		**$9,720.00**
TASK 8. Bioventing System Equipment				
Blower (includes shipping)	$2,157.82	LUMP	1	$2,157.82
Knock Out Drum (with high level alarm, shipping)	$1,269.00	LUMP	1	$1,269.00
System shed (8'X8')	$1,865.00	LUMP	1	$1,865.00
System Gauges (vaccuum, pressure, temp)	$560.00	LUMP	1	$560.00
Shed Piping, Valves	$760.45	LUMP	1	$760.45
		TASK 8 SUBTOTAL:		**$6,612.27**
TASK 9. Bioventing System Assembly				
Trenching, piping, backfill (M&D Construction)	$12,650.00	LUMP	1	$12,650.00
Subcontractor Markup	7%	LUMP	1	$885.50
Power Installation - Bioventing Shed (United Elec.)	$3,600.00	LUMP	1	$3,600.00
Subcontractor Markup	7%	LUMP	1	$252.00
		TASK 9 SUBTOTAL:		**$17,387.50**
TASK 10. Investigation Derived Waste				
Staff Engineer	$108.00	HOUR	6	$648.00
Disposal fees	$50.00	LUMP	1	$50.00
		TASK 10 SUBTOTAL:		**$698.00**

TASK DESCRIPTION	PRICE	UNITS	QTY	PRICE
TASK 11. Well Survey				
Staff Engineer	$108.00	HOUR	4	$432.00
Proffesional Land Surveyor	$95.00	HOUR	10	$950.00
GNSS Surevy Unit	$125.00	HOUR	10	$1,250.00
Survey Equipment	$10.50	HOUR	10	$105.00
Senior Engineer	$135.00	HOUR	1	$135.00
		TASK 11 SUBTOTAL:		**$2,872.00**
TASK 12. Bioventing System Startup/Optimization				
Staff Engineer	$108.00	HOUR	32	$3,456.00
PID	$15.00	HOUR	32	$480.00
Anemometer	$5.00	HOUR	32	$160.00
Magnehelic gauge	$5.00	HOUR	32	$160.00
Tedlar Bags	$20.00	EACH	10	$200.00
		TASK 12 SUBTOTAL:		**$4,456.00**
TASK 13. Bioventing System Checks, Operation and Maintenance (Two Years Quarterly)* **				
Staff Engineer	$108.00	HOUR	80	$8,640.00
PID	$5.00	HOUR	80	$400.00
Anemometer	$5.00	HOUR	80	$400.00
Electricity Consumption (1-years)****	$7,769.34	LUMP	2	$15,538.68
		TASK 13 SUBTOTAL:		**$24,978.68**
TASK 14. Bioventing System Air Monitoring (Four Quarterly Events)				
Staff Engineer	$108.00	HOUR	18	$1,944.00
		TASK 14 SUBTOTAL:		**$1,944.00**
Task 15. Groundwater Monitoring (15 Wells, 3 Events)				
Staff Engineer	$108.00	HOUR	70	$7,560.00
YSI Combo Meter w/Flow Through Cell	$10.00	HOUR	50	$500.00
Submersible Pump	$5.00	HOUR	50	$250.00
Oil/water Interface Probe	$10.00	HOUR	50	$500.00
Well Consumables	$5.00	WELL	45	$225.00
		TASK 15 SUBTOTAL:		**$9,035.00**
Task 16. Water Level Measurements (8 Wells, 3 Events)				
Staff Engineer	$108.00	HOUR	9	$972.00
Oil/water Interface Probe	$10.00	HOUR	9	$90.00
		TASK 16 SUBTOTAL:		**$1,062.00**
Task 17. Laboratory Analysis				
APH MADEP (Air)	$240.00	SAMPLE	4	$960.00
PTRCB Sampling Fee	$10.00	SAMPLE	4	$40.00
VPH (Water)	$120.00	SAMPLE	45	$5,400.00
EPH Screen (Water)	$75.00	SAMPLE	45	$3,375.00
EPH Fractions w/o PAHs (Water)	$150.00	SAMPLE	45	$6,750.00
VPH (Soil)	$120.00	SAMPLE	4	$480.00
EPH Screen (Soil)	$75.00	SAMPLE	4	$300.00
EPH Fractions w/o PAHs (Soil)	$150.00	SAMPLE	4	$600.00
PTRCB Sampling Fee	$10.00	SAMPLE	49	$490.00
		TASK 17 SUBTOTAL:		**$18,395.00**
Task 18. Project Reporting (Report AR-07)				
Project Engineer/Hydrogeologist	$115.50	HOUR	8	$924.00
Staff Engineer	$108.00	HOUR	56	$6,048.00
GIS Specialist	$86.50	HOUR	8	$692.00
		TASK 18 SUBTOTAL:		**$7,664.00**
TOTAL COST :				**$162,391.26**

Notes:

**Vapor point manhole found damaged, needs replacement
***Operation and Maintenance costs do not include non-routine maintenance items including but not limited to motorized equipment repair or replacement
****Electricity consumption is estimated, invoice will reflect actual costs