# Appendix A: Montana Pollutant Discharge Elimination System Permit for the Butte Highlands Joint Venture Mine (MT0031755)

Major Industrial
Permit No.: MT0031755

# MONTANA DEPARTMENT OF ENVIRONMENTAL QUALITY

## AUTHORIZATION TO DISCHARGE UNDER THE MONTANA POLLUTANT DISCHARGE ELIMINATION SYSTEM

In compliance with Montana Water Quality Act, Title 75, Chapter 5, Montana Code Annotated (MCA) and the Federal Water Pollution Control Act (the "Clean Water Act"), 33 U.S.C. § 1251 *et seq.*,

**Butte Highlands JV, LLC**

is authorized to discharge from its **Butte Highlands Mine**

located at **Intersection of Highlands Road and Camp Creek Road, Latitude 45° 47' 31" N, Longitude 112° 30' 55"**

to receiving waters named, **Basin Creek, tributary to Fish Creek, Middle Fork of Moose Creek, and tributary to Middle Fork of Moose Creek**

in accordance with discharge point(s), effluent limitations, monitoring requirements and other conditions set forth herein. Authorization for discharge is limited to those outfalls specifically listed in the permit.

This permit shall become effective: **August 1, 2013.**

This permit and the authorization to discharge shall expire at midnight, **July 31, 2018 .**

FOR THE MONTANA DEPARTMENT OF
ENVIRONMENTAL QUALITY

Bob Habeck

Bob Habeck, Chief
Water Protection Bureau
Permitting & Compliance Division

Issuance Date: 6/30/13

# TABLE OF CONTENTS

Cover Sheet--Issuance and Expiration Dates

**I. EFFLUENT LIMITATIONS, MONITORING REQUIREMENTS & OTHER CONDITIONS 3**

A. Description of Discharge Points and Mixing Zone ..... 3
B. Effluent Limitations ..... 4
C. Monitoring Requirements ..... 7
D. Special Conditions ..... 10

**II. MONITORING, RECORDING AND REPORTING REQUIREMENTS ..... 12**

A. Representative Sampling ..... 12
B. Monitoring Procedures ..... 12
C. Penalties for Tampering ..... 12
D. Reporting of Monitoring Results ..... 12
E. Compliance Schedules ..... 12
F. Additional Monitoring by the Permittee ..... 13
G. Records Contents ..... 13
H. Retention of Records ..... 13
I. Twenty-four Hour Notice of Noncompliance Reporting ..... 13
J. Other Noncompliance Reporting ..... 14
K. Inspection and Entry ..... 14

**III. COMPLIANCE RESPONSIBILITIES ..... 16**

A. Duty to Comply ..... 16
B. Penalties for Violations of Permit Conditions ..... 16
C. Need to Halt or Reduce Activity not a Defense ..... 16
D. Duty to Mitigate ..... 16
E. Proper Operation and Maintenance ..... 16
F. Removed Substances ..... 17
G. Bypass of Treatment Facilities ..... 17
H. Upset Conditions ..... 18
I. Toxic Pollutants ..... 18
J. Changes in Discharge of Toxic Substances ..... 18

**IV. GENERAL REQUIREMENTS ..... 20**

A. Planned Changes ..... 20
B. Anticipated Noncompliance ..... 20
C. Permit Actions ..... 20
D. Duty to Reapply ..... 20
E. Duty to Provide Information ..... 20
F. Other Information ..... 20
G. Signatory Requirements ..... 20
H. Penalties for Falsification of Reports ..... 21
I. Availability of Reports ..... 22
J. Oil and Hazardous Substance Liability ..... 22
K. Property or Water Rights ..... 22
L. Severability ..... 22
M. Transfers ..... 22
N. Fees ..... 23
O. Reopener Provisions ..... 23

**V. DEFINITIONS ..... 25**

# I. EFFLUENT LIMITATIONS, MONITORING REQUIREMENTS & OTHER CONDITIONS

## A. Description of Discharge Points and Mixing Zone

The authorization to discharge provided under this permit is limited to those outfalls specially designated below as discharge locations. Discharges at any location not authorized under an MPDES permit is a violation of the Montana Water Quality Act and could subject the person(s) responsible for such discharge to penalties under the Act. Knowingly discharging from an unauthorized location or failing to report an unauthorized discharge within a reasonable time from first learning of an unauthorized discharge could subject such person to criminal penalties as provided under Section 75-5-632 of the Montana Water Quality Act.

| Outfall | Description |
|---|---|
| 001 | **Location:** At the end of the pipe/ditch, discharging into Basin Creek, located at 45° 47' 45" N latitude, 112° 30' 54" W longitude.<br><br>**Mixing Zone:** A mixing zone has not been granted for this outfall.<br><br>**Treatment Works**: Hyperfiltration (Reverse Osmosis) |
| 002 | **Location:** At the end of the pipe/ditch, discharging into a tributary of Fish Creek, located at 45° 47' 34" N latitude, 112° 29' 50" W longitude.<br><br>**Mixing Zone:** A mixing zone has not been granted for this outfall.<br><br>**Treatment Works**: Hyperfiltration (Reverse Osmosis) |
| 003 | **Location:** At the end of the pipe/ditch, discharging into Middle Fork of Moose Creek, located at 45° 47' 09" N latitude, 112° 31' 37" W longitude.<br><br>**Mixing Zone:** A mixing zone has not been granted for this outfall.<br><br>**Treatment Works**: Hyperfiltration (Reverse Osmosis) |
| 004 | **Location:** At the end of the pipe/ditch, discharging into a tributary of Middle Fork of Moose Creek, located at 45° 47' 00" N latitude, 112° 31' 31" W longitude. |

**Mixing Zone:** A mixing zone has not been granted for this outfall.

**Treatment Works**: Hyperfiltration (Reverse Osmosis)

005

**Location:** At the beginning of the land application system, located at approximately 45° 47' 28" N latitude, 112° 31' 11" W longitude with a hydraulic connection to Middle Fork of Moose Creek.

**Mixing Zone:** A mixing zone has not been granted for this outfall.

**Treatment Works**: Hyperfiltration (Reverse Osmosis)

006

**Location:** At the beginning of the infiltration pipe, located at approximately 45° 47' 08" N latitude, 112° 31' 27" W longitude with a hydraulic connection to Middle Fork of Moose Creek.

**Mixing Zone:** A mixing zone has not been granted for this outfall.

**Treatment Works**: Hyperfiltration (Reverse Osmosis)

B. Effluent Limitations

**Outfall 001-006**

Beginning on the effective date of this permit and lasting through the term of the permit, the quality of effluent discharged by the facility shall, as a minimum, meet the limitations as set forth below:

**Numeric Discharge Limitations: Outfall 001 [1]**

| Parameter and Code | Units | Average Monthly | Daily Maximum |
|---|---|---|---|
| Ammonia, Total (as N) (00610) | mg/L | 0.011[2] | 0.021[2] |
| Arsenic, Total Recoverable (00978) | µg/L | 5.0 | 10.0 |
| Cadmium, Total Recoverable (01113) | µg/L | 0.02[3] | 0.05 |
| Chromium, Total Recoverable (01118) | µg/L | 0.29[4] | 0.59[4] |
| Copper, Total Recoverable (01119) | µg/L | 1.1[5] | 2.1 |
| Fluoride (00951) | µg/L | 65[6] | 131[6] |
| Lead, Total Recoverable (01114) | µg/L | 0.12[7] | 0.25[7] |
| Mercury, Total Recoverable (71901) | µg/L | 0.006 | 0.012 |
| Nickel, Total Recoverable (01074) | µg/L | 0.13[8] | 0.26[8] |
| Nitrite + Nitrate (as N) (00630) | mg/L | 0.11 | 0.23 |
| Nitrogen, Total (as N) (00600) | mg/L | 0.18 | -- |
| pH (00400) | S.U. | 7.6 | 8.3 |
| Phosphorus, Total (as P) (00665) | mg/L | 0.012 | -- |
| Selenium, Total Recoverable (00981) | µg/L | 0.17[9] | 0.34[9] |
| Total Suspended Solids (TSS) (00530) | mg/L | 3.0 | 6.1 |
| Zinc, Total Recoverable (01094) | µg/L | 2.0[10] | 4.1[10] |

Footnotes:
1. See Definitions section at end of permit for explanation of terms.
2. The permittee will be in compliance with the applicable effluent limitation if ammonia does not exceed the RRV of 0.07 mg/L.
3. The permittee will be in compliance with the applicable effluent limitation if cadmium does not exceed the RRV of 0.03 µg/L.
4. The permittee will be in compliance with the applicable effluent limitation if chromium does not exceed the RRV of 10 µg/L.
5. The permittee will be in compliance with the applicable effluent limitation if copper does not exceed the RRV of 2 µg/L.
6. The permittee will be in compliance with the applicable effluent limitation if fluoride does not exceed the RRV of 200 µg/L.
7. The permittee will be in compliance with the applicable effluent limitation if lead does not exceed the RRV of 0.3 µg/L.
8. The permittee will be in compliance with the applicable effluent limitation if nickel does not exceed the RRV of 2 µg/L.
9. The permittee will be in compliance with the applicable effluent limitation if selenium does not exceed the RRV of 1 µg/L.
10. The permittee will be in compliance with the applicable effluent limitation if zinc does not exceed the RRV of 8 µg/L.

| Numeric Discharge Limitations: Outfall 002 [1] | | | |
|---|---|---|---|
| Parameter and Code | Units | Average Monthly | Daily Maximum |
| Cadmium, Total Recoverable (01113) | µg/L | 0.02[2] | 0.03 |
| Copper, Total Recoverable (01119) | µg/L | 0.4[3] | 0.7[3] |
| Lead, Total Recoverable (01114) | µg/L | 0.1[4] | 0.1[4] |
| Mercury, Total Recoverable (71901) | µg/L | 0.006 | 0.012 |
| Nitrogen, Total (as N) (00600) | mg/L | 0.08 | -- |
| pH (00400) | S.U. | 7 | 8.5 |
| Phosphorus, Total (as P) (00665) | mg/L | 0.02 | -- |
| Selenium, Total Recoverable (00981) | µg/L | 0.61[3] | 1.23 |
| Total Suspended Solids (TSS) (00530) | mg/L | 0.4 | 0.9 |
| Zinc, Total Recoverable (01094) | µg/L | 4.6[6] | 9.2 |

Footnotes:
1. See Definitions section at end of permit for explanation of terms.
2. The permittee will be in compliance with the applicable effluent limitation if cadmium does not exceed the RRV of 0.03 µg/L.
3. The permittee will be in compliance with the applicable effluent limitation if copper does not exceed the RRV of 2 µg/L.
4. The permittee will be in compliance with eh applicable effluent limitation if lead does not exceed the RRV of 0.3 µg/L.
5. The permittee will be in compliance with the applicable effluent limitation if selenium does not exceed the RRV of 1 µg/L.
6. The permittee will be in compliance with the applicable effluent limitation if zinc does not exceed the RRV of 8 µg/L.

| Numeric Discharge Limitations: Outfall 003, 005, 006 [1] | | | |
|---|---|---|---|
| Parameter and Code | Units | Average Monthly | Daily Maximum |
| Arsenic, Total Recoverable (00978) | µg/L | 2.0 | 3.9 |
| Cadmium, Total Recoverable (01113) | µg/L | 0.06 | 0.11 |
| Copper, Total Recoverable (01119) | µg/L | 2.1 | 4.3 |
| Lead, Total Recoverable (01114) | µg/L | 1 | 2 |
| Mercury, Total Recoverable (71901) | µg/L | 0.006 | 0.012 |
| Nitrogen, Total (as N) (00600) | mg/L | 0.27 | -- |
| pH (00400) | S.U. | 7 | 8.5 |
| Phosphorus, Total (as P) (00665) | mg/L | 0.008 | -- |
| Selenium, Total Recoverable (00981) | µg/L | 0.61[2] | 1.23 |
| Total Suspended Solids (TSS) (00530) | mg/L | 1.0 | 2.0 |
| Zinc, Total Recoverable (01094) | µg/L | 27.6 | 55.5 |

Footnotes:
1. See Definitions section at end of permit for explanation of terms.
2. The permittee will be in compliance with the applicable effluent limitation if selenium does not exceed the RRV of 1 µg/L.

| Numeric Discharge Limitations: Outfall 004 [1] | | | |
|---|---|---|---|
| Parameter and Code | Units | Average Monthly | Daily Maximum |
| Arsenic, Total Recoverable (00978) | µg/L | 3.0 | 6.1 |
| Cadmium, Total Recoverable (01113) | µg/L | 0.04 | 0.08 |
| Copper, Total Recoverable (01119) | µg/L | 1.4[2] | 2.8 |
| Lead, Total Recoverable (01114) | µg/L | 0.5 | 1.0 |
| Mercury, Total Recoverable (71901) | µg/L | 0.006 | 0.012 |
| Nitrogen, Total (as N) (00600) | mg/L | 0.14 | -- |
| pH (00400) | S.U. | 7 | 8.5 |
| Phosphorus, Total (as P) (00665) | mg/L | 0.012 | -- |
| Selenium, Total Recoverable (00981) | µg/L | 0.61[3] | 1.23 |
| Total Suspended Solids (TSS) (00530) | mg/L | 1.5 | 3.0 |
| Zinc, Total Recoverable (01094) | µg/L | 14.7 | 29.5 |

Footnotes:
1. See Definitions section at end of permit for explanation of terms.
2. The permittee will be in compliance with the applicable effluent limitation if copper does not exceed the RRV of 2 µg/L.
3. The permittee will be in compliance with the applicable effluent limitation if selenium does not exceed the RRV of 1 µg/L.

C. Monitoring Requirements

**Outfalls 001-006**

As a minimum, upon the effective date of this permit, the following constituents shall be monitored at the frequency and with the type of measurement indicated; samples or measurements shall be representative of the volume and nature of the monitored discharge. With the exception of flow measurements (see Monitoring Requirements table Footnote No. 2 below), effluent monitoring samples shall be taken from the distribution valve box prior to the pipes routing to each outfall. Continuous flow monitoring for total effluent flow and Outfalls 001 through 004 must occur. If no discharge occurs during the entire monitoring period, it shall be stated on the Discharge Monitoring Report Form (EPA No. 3320-1) that no discharge or overflow occurred.

All effluent and ambient monitoring must be conducted in accordance with test procedures approved under 40 CFR 136, unless another method is specified in 40 CFR Subchapter N. Analytical methods must achieve the required reporting value (RRV) specified in Circular DEQ-7, unless otherwise specified in the permit. The permittee may use any approved analytical method capable of achieving the RRV specified in the permit.

| Monitoring Requirements–Monitoring Location 001–006[1] | | | | |
|---|---|---|---|---|
| **Parameter and Code** | **Units** | **Minimum Monitoring Frequency** | **Sample Type** | **Basis** |
| Flow rate[2] (00056) | mgd | Continuous | Recorded | ARM 17.30.1351 |
| pH, maximum (00400) | SU | Weekly | Instantaneous | Effluent Limitation |
| pH, minimum (00400) | SU | Weekly | Instantaneous | Effluent Limitation |
| Temperature (00011) | °C | Weekly | Instantaneous | Monitor |
| Ammonia, Total (as N) (00610) | mg/L | Weekly | Grab | Effluent Limitation |
| Arsenic, Total Recoverable (00978) | µg/L | Weekly | Grab | Effluent Limitation |
| Cadmium, Total Recoverable (01113) | µg/L | Weekly | Grab | Effluent Limitation |
| Chromium, Total Recoverable (01118) | µg/L | Weekly | Grab | Effluent Limitation |
| Copper, Total Recoverable (01119) | µg/L | Weekly | Grab | Effluent Limitation |
| Fluoride (00951) | µg/L | Weekly | Grab | Effluent Limitation |
| Hardness, Total (as CaCO3) (00900) | mg/L | Quarterly | Grab | Monitor |
| Lead, Total Recoverable (01114) | µg/L | Weekly | Grab | Effluent Limitation |
| Mercury, Total Recoverable (71901) | µg/L | Weekly | Grab | Effluent Limitation |
| Nickel, Total Recoverable (01074) | µg/L | Weekly | Grab | Effluent Limitation |
| Total Kjeldahl Nitrogen (00625) | mg/L | Weekly | Grab | Monitor (part of Eff. Limit) |
| Nitrite-Nitrate (as N) (00630) | mg/L | Weekly | Grab | Effluent Limitation |
| Nitrogen, Total (as N)[3] (00600) | mg/L | Weekly | Calculate | Effluent Limitation |
| | lbs/day | -- | -- | |
| Phosphorus, Total (as P) (00665) | mg/L | Weekly | Grab | Effluent Limitation |
| | lbs/day | -- | -- | |
| Oil & Grease – Total Recoverable (00552) | mg/L | Quarterly | Grab | Monitor |
| Selenium, Total Recoverable (00981) | µg/L | Weekly | Grab | Effluent Limitation |
| Sulfate, Total (as SO4) (00945) | mg/L | Quarterly | Grab | Monitor |
| Total Suspended Solids (TSS) (00530) | mg/L | Weekly | Grab | Effluent Limitation |
| Zinc, Total Recoverable (01094) | µg/L | Weekly | Grab | Effluent Limitation |

1. Effluent samples for Outfalls 001–006 will be taken at the distribution valve box.
2. Total effluent flow and individual flow for each of Outfalls 001 through 004 must be recorded continuously. Average and maximum weekly flow will be reported on DMRs.
3. An RRV of 0.15 mg/L must be achieved for total nitrogen (i.e. if the sum of nitrite-nitrate plus total Kjeldahl nitrogen is used to calculate total nitrogen, each component parameter analysis must achieve an RRV of 0.15 mg/L).

1. Whole Effluent Toxicity Monitoring – Chronic Toxicity

Starting in the first 6 months following the effective date of the permit, the permittee shall, at least semiannually conduct a chronic toxicity static renewal test on a grab sample of the effluent from Outfall 001. Testing will employ two species and will consist of 5 effluent concentrations (100, 50, 25, 12.5, 6.25 percent effluent) and a control. Dilution water and the control shall consist of receiving water collected upstream from Outfall 003 (tributary to Fish Creek). If the tributary to Fish Creek upstream of Outfall 003 is shown to be toxic or dry, moderately hard reconstituted laboratory water may be substituted. Samples shall be collected on a two day progression; i.e., if the first semiannual sample is on a Monday, the second quarter sample shall be on a Wednesday, etc. Saturdays, Sundays and Holidays will be skipped in the progression.

The static toxicity tests shall be conducted in general accordance with the procedures set out in the latest revision of Methods for Measuring the Chronic Toxicity of Effluent to Freshwater and Marine Organisms, EPA-821-R-02-013 and the "*Region VIII NPDES Whole Effluent Toxics Control Program, August 1997*". The permittee shall conduct a three-brood (seven day) survival and reproduction static renewal toxicity test using *Ceriodaphnia dubia* (test method 1002.0) and a seven day growth and survival static renewal toxicity test using *Pimephales promelas* (test method 1000.0). The control of pH in the toxicity test utilizing $CO_2$ enriched atmospheres is allowed to prevent rising pH drift. The target pH selected must represent the pH value of the receiving water at the time of sample collection.

There is not a chronic toxicity limit in this permit, but the effluent is being screened for toxicity. Chronic toxicity occurs when, during a chronic toxicity test, the 25% inhibition concentration ($IC_{25}$) for any tested species is less than or equal to 100% effluent.

If chronic toxicity occurs in a routine test, an additional test shall be conducted within 14 days of the date of the initial sample. Should chronic toxicity occur in the second test, testing shall occur once a month until further notified by the Department. In all cases, the results of all toxicity tests must be submitted to the Department in accordance with Part II of this permit.

Semiannual results from the laboratory shall be reported along with the Discharge Monitoring Report (DMR) form submitted for the end of the reporting six month period (e.g., whole effluent results for the reporting period ending June 30 shall be reported with the June DMR due July 28th and the remaining semiannual report submitted with the December DMR's due January 28 of the following year). The format for the laboratory report shall be consistent with the

latest revision of Region VIII Guidance for Chronic Whole Effluent Reporting, and shall include all chemical and physical data as specified.

D. Special Conditions

1. Toxicity Reduction Evaluation / Toxicity Identification Evaluation

Should chronic toxicity be detected in the required resample, a TIE-TRE shall be undertaken by the permittee within 14 days to establish the cause of the toxicity, locate the source(s) of the toxicity, and develop control or treatment for the toxicity. Failure to initiate or conduct an adequate TIE-TRE, or delays in the conduct of such tests, shall not be considered a justification for noncompliance with this permit.

The permittee shall initiate a TRE using as guidance, based on the type of treatment facility, EPA manual *Toxicity Reduction Evaluation Guidance for Municipal Wastewater Treatment Plants* (EPA/833/B-99/002, 1999) or EPA manual *Generalized Methodology for Conducting Industrial Toxicity Reduction Evaluations* (EPA/600/2-88/070, 1989).

2. Best Management Practices:

The permit establishes the requirement that the permittee develop and implement a BMP Plan that achieves the objectives and specific requirements listed below. A copy of the plan must be submitted to DEQ within six months of the effective date of the permit. The Plan must be implemented as soon as possible but no later than nine months from the effective date of the permit. The purpose of the plan is to control runoff from land application areas.

Objectives:

The discharge from Outfall 005 meets the nondegradation water quality standards, so the normal requirements for land application of waste water do not apply. For Outfall 005, the BMP plan will document:

a. the land application procedures that ensure that runoff from the land application area does not contribute to excessive sedimentation of the stream.
b. how the permittee will prevent the soil's water holding capacity from being exceeded.

3. Ambient Monitoring Requirements:

For Outfalls 001-006, the permittee is required to collect at a minimum, baseline conditions of stream bed composition at two locations for each receiving stream and conduct annual monitoring of stream bed composition at each monitoring location. The annual monitoring reports must be included

with the renewal application and will be used to evaluate discharge volume during the permit renewal.

4. Plan Submission

Within 90 days of issuance of this permit or prior to commencing discharge from the facility, whichever is sooner, the permittee will submit:

- plans detailing how continuous flow monitoring for total effluent flow and individual effluent flow for Outfalls 1 through 4 will be performed and
- an updated engineering drawing(s) showing the treatment system, distribution valve box location (effluent sampling location), and flow measurement locations.

## II. MONITORING, RECORDING AND REPORTING REQUIREMENTS

### A. Representative Sampling

Samples taken in compliance with the monitoring requirements established under Part I of the permit shall be collected from the effluent stream prior to discharge into the receiving waters. Samples and measurements shall be representative of the volume and nature of the monitored discharge.

### B. Monitoring Procedures

Monitoring must be conducted according to test procedures approved under Part 136, Title 40 of the Code of Federal Regulations, unless other test procedures have been specified in this permit. All flow-measuring and flow-recording devices used in obtaining data submitted in self-monitoring reports must indicate values within 10 percent of the actual flow being measured.

### C. Penalties for Tampering

The Montana Water Quality Act provides that any person who falsifies, tampers with, or knowingly renders inaccurate, any monitoring device or method required to be maintained under this permit shall, upon conviction, be punished by a fine of not more than $10,000, or by imprisonment for not more than six months, or by both.

### D. Reporting of Monitoring Results

Self-Monitoring results will be reported monthly. Monitoring results obtained during the previous reporting period shall be summarized and reported on a Discharge Monitoring Report Form (EPA No. 3320-1), postmarked no later than the 28th day of the month following the completed reporting period. Whole effluent toxicity (biomonitoring) results must be reported on forms from the most recent version of EPA Region VIII's "Guidance for Whole Effluent Reporting" with copies of the laboratory analysis report. If no discharge occurs during the reporting period, "no discharge" shall be reported. Legible copies of these, and all other reports required herein, shall be signed and certified in accordance with the "Signatory Requirements" (see Part IV.G of this permit), and submitted to the Department and the Regional Administrator at the following addresses:

(a) Montana Department of Environmental Quality
Water Protection Bureau
PO Box 200901
Helena, Montana 59620-0901
Phone: (406) 444-3080

(b) U.S. Environmental Protection Agency
301 South Park Avenue
Drawer 10096
Helena, Montana 59626
Phone: (406) 441-1123

### E. Compliance Schedules

Reports of compliance or noncompliance with, or any progress reports on interim and final requirements contained in any Compliance Schedule of this permit shall be submitted no later than 14 days following each schedule date.

F. Additional Monitoring by the Permittee

If the permittee monitors any pollutant more frequently than required by this permit, using approved analytical methods as specified in this permit, the results of this monitoring shall be included in the calculation and reporting of the data submitted in the Discharge Monitoring Report. Such increased frequency shall also be indicated.

G. Records Contents

Records of monitoring information shall include:

1. The date, exact place, and time of sampling or measurements;

2. The initials or name(s) of the individual(s) who performed the sampling or measurements;

3. The date(s) analyses were performed;

4. The time analyses were initiated;

5. The initials or name(s) of individual(s) who performed the analyses;

6. References and written procedures, when available, for the analytical techniques or methods used; and

7. The results of such analyses, including the bench sheets, instrument readouts, computer disks or tapes, etc., used to determine these results.

H. Retention of Records

The permittee shall retain records of all monitoring information, including all calibration and maintenance records and all original strip chart recordings for continuous monitoring instrumentation, copies of all reports required by this permit, and records of all data used to complete the application for this permit, for a period of at least three years from the date of the sample, measurement, report or application. This period may be extended by request of the Department at any time. Data collected on site, copies of Discharge Monitoring Reports, and a copy of this MPDES permit must be maintained on site during the duration of activity at the permitted location.

I. Twenty-four Hour Notice of Noncompliance Reporting

1. The permittee shall report any serious incidents of noncompliance as soon as possible, but no later than twenty-four (24) hours from the time the permittee first became aware of the circumstances. The report shall be made to the Water Protection Bureau at (406) 444-3080 or the Office of Disaster and Emergency Services at (406) 324-4777. The following examples are considered serious incidents:

a. Any noncompliance which may seriously endanger health or the environment;

b. Any unanticipated bypass which exceeds any effluent limitation in the permit (See Part III.G of this permit, "Bypass of Treatment Facilities"); or

c. Any upset which exceeds any effluent limitation in the permit (see Part III.H of this permit, "Upset Conditions").

2. A written submission shall also be provided within five days of the time that the permittee becomes aware of the circumstances. The written submission shall contain:

a. a description of the noncompliance and its cause;

b. the period of noncompliance, including exact dates and times;

c. the estimated time noncompliance is expected to continue if it has not been corrected; and

d. steps taken or planned to reduce, eliminate, and prevent reoccurrence of the noncompliance.

3. The Department may waive the written report on a case-by-case basis if the oral report has been received within 24 hours by the Water Protection Bureau, by phone, (406) 444-3080.

4. Reports shall be submitted to the addresses in Part II.D of this permit, "Reporting of Monitoring Results".

J. Other Noncompliance Reporting

Instances of noncompliance not required to be reported within 24 hours shall be reported at the time that monitoring reports for Part II.D of this permit are submitted. The reports shall contain the information listed in Part II.I.2 of this permit.

K. Inspection and Entry

The permittee shall allow the head of the Department or the Director, or an authorized representative thereof, upon the presentation of credentials and other documents as may be required by law, to:

1. Enter upon the permittee's premises where a regulated facility or activity is located or conducted, or where records must be kept under the conditions of this permit;

2. Have access to and copy, at reasonable times, any records that must be kept under the conditions of this permit;

3. Inspect at reasonable times any facilities, equipment (including monitoring and control equipment), practices, or operations regulated or required under this permit; and

4. Sample or monitor at reasonable times, for the purpose of assuring permit compliance, any substances or parameters at any location.

## III. COMPLIANCE RESPONSIBILITIES

### A. Duty to Comply

The permittee must comply with all conditions of this permit. Any permit noncompliance constitutes a violation of the Act and is grounds for enforcement action; for permit termination, revocation and reissuance, or modification; or for denial of a permit renewal application. The permittee shall give the Department or the Regional Administrator advance notice of any planned changes at the permitted facility or of an activity which may result in permit noncompliance.

### B. Penalties for Violations of Permit Conditions

The Montana Water Quality Act provides that any person who violates a permit condition of the Act is subject to civil or criminal penalties not to exceed $10,000 per day of such violation. Any person who willfully or negligently violates permit conditions of the Act is subject to a fine of not more than $50,000 per day of violation, or by imprisonment for not more than 2 years, or both, for subsequent convictions. MCA 75-5-611(a) also provides for administrative penalties not to exceed $10,000 for each day of violation and up to a maximum not to exceed $100,000 for any related series of violations. Except as provided in permit conditions on Part III.G of this permit, "Bypass of Treatment Facilities" and Part III.H of this permit, "Upset Conditions", nothing in this permit shall be construed to relieve the permittee of the civil or criminal penalties for noncompliance.

### C. Need to Halt or Reduce Activity not a Defense

It shall not be a defense for a permittee in an enforcement action that it would have been necessary to halt or reduce the permitted activity in order to maintain compliance with the conditions of this permit.

### D. Duty to Mitigate

The permittee shall take all reasonable steps to minimize or prevent any discharge in violation of this permit which has a reasonable likelihood of adversely affecting human health or the environment.

### E. Proper Operation and Maintenance

The permittee shall at all times properly operate and maintain all facilities and systems of treatment and control (and related appurtenances) which are installed or used by the permittee to achieve compliance with the conditions of this permit. Proper operation and maintenance also includes adequate laboratory controls and appropriate quality assurance procedures. This provision requires the operation of back-up or auxiliary facilities or similar systems which are installed by a permittee only when the operation is necessary to achieve compliance with the conditions of the permit. However, the permittee shall operate, as a minimum, one complete set of each main line unit treatment process whether or not this process is needed to achieve permit effluent compliance.

F. Removed Substances

Collected screenings, grit, solids, sludges, or other pollutants removed in the course of treatment shall be disposed of in such a manner so as to prevent any pollutant from entering any waters of the state or creating a health hazard.

G. Bypass of Treatment Facilities

1. Bypass not exceeding limitations. The permittee may allow any bypass to occur which does not cause effluent limitations to be exceeded, but only if it also is for essential maintenance to assure efficient operation. These bypasses are not subject to the provisions of Parts III.G.2 and III.G.3 of this permit.

2. Notice:

   a. Anticipated bypass. If the permittee knows in advance of the need for a bypass, it shall submit prior notice, if possible at least 10 days before the date of the bypass.

   b. Unanticipated bypass. The permittee shall submit notice of an unanticipated bypass as required under Part II.I of this permit, "Twenty-four Hour Reporting".

3. Prohibition of bypass:

   a. Bypass is prohibited and the Department may take enforcement action against a permittee for a bypass, unless:

      1) The bypass was unavoidable to prevent loss of life, personal injury, or severe property damage;

      2) There were no feasible alternatives to the bypass, such as the use of auxiliary treatment facilities, retention of untreated wastes, or maintenance during normal periods of equipment downtime. This condition is not satisfied if adequate back-up equipment should have been installed in the exercise of reasonable engineering judgment to prevent a bypass which occurred during normal periods of equipment downtime or preventive maintenance; and

      3) The permittee submitted notices as required under Part III.G.2 of this permit.

   b. The Department may approve an anticipated bypass, after considering its adverse effects, if the Department determines that it will meet the three conditions listed above in Part III.G.3.a of this permit.

H. Upset Conditions

1. Effect of an upset. An upset constitutes an affirmative defense to an action brought for noncompliance with technology based permit effluent limitations if the requirements of Part III.H.2 of this permit are met. No determination made during administrative review of claims that noncompliance was caused by upset, and before an action for noncompliance, is final administrative action subject to judicial review (i.e. Permittees will have the opportunity for a judicial determination on any claim of upset only in an enforcement action brought for noncompliance with technology-based permit effluent limitations).

2. Conditions necessary for a demonstration of upset. A permittee who wishes to establish the affirmative defense of upset shall demonstrate, through properly signed, contemporaneous operating logs, or other relevant evidence that:

   a. An upset occurred and that the permittee can identify the cause(s) of the upset;

   b. The permitted facility was at the time being properly operated;

   c. The permittee submitted notice of the upset as required under Part II.I of this permit, "Twenty-four Hour Notice of Noncompliance Reporting"; and

   d. The permittee complied with any remedial measures required under Part III.D of this permit, "Duty to Mitigate".

3. Burden of proof. In any enforcement proceeding, the permittee seeking to establish the occurrence of an upset has the burden of proof.

I. Toxic Pollutants

The permittee shall comply with effluent standards or prohibitions established under Section 307(a) of the Clean Water Act for toxic pollutants within the time provided in the regulations that establish those standards or prohibitions, even if the permit has not yet been modified to incorporate the requirement.

J. Changes in Discharge of Toxic Substances

Notification shall be provided to the Department as soon as the permittee knows of, or has reason to believe:

1. That any activity has occurred or will occur which would result in the discharge, on a routine or frequent basis, of any toxic pollutant which is not limited in the permit, if that discharge will exceed the highest of the following "notification levels":

   a. One hundred micrograms per liter (100 mg/L);

b. Two hundred micrograms per liter (200 mg/L) for acrolein and acrylonitrile; five hundred micrograms per liter (500 mg/L) for 2,4-dinitrophenol and for 2-methyl-4, 6-dinitrophenol; and one milligram per liter (1 mg/L) for antimony;

c. Five (5) times the maximum concentration value reported for that pollutant in the permit application in accordance with 40 CFR 122.21(g)(7); or

d. The level established by the Department in accordance with 40 CFR 122.44(f).

2. That any activity has occurred or will occur which would result in any discharge, on a non-routine or infrequent basis, of a toxic pollutant which is not limited in the permit, if that discharge will exceed the highest of the following "notification levels":

a. Five hundred micrograms per liter (500 mg/L);

b. One milligram per liter (1 mg/L) for antimony;

c. Ten (10) times the maximum concentration value reported for that pollutant in the permit application in accordance with 40 CFR 122.21(g)(7); or

d. The level established by the Department in accordance with 40 CFR 122.44(f).

# IV. GENERAL REQUIREMENTS

A. Planned Changes

The permittee shall give notice to the Department as soon as possible of any planned physical alterations or additions to the permitted facility. Notice is required only when the alteration or addition could significantly change the nature or increase the quantity of pollutant discharged. This notification applies to pollutants which are not subject to effluent limitations in the permit.

B. Anticipated Noncompliance

The permittee shall give advance notice to the Department of any planned changes in the permitted facility or activity which may result in noncompliance with permit requirements.

C. Permit Actions

This permit may be modified, revoked and reissued, or terminated for cause. The filing of a request by the permittee for a permit modification, revocation and reissuance, or termination, or a notification of planned changes or anticipated noncompliance, does not stay any permit condition.

D. Duty to Reapply

If the permittee wishes to continue an activity regulated by this permit after the expiration date of this permit, the permittee must apply for and obtain a new permit. The application must be submitted at least 180 days before the expiration date of this permit.

E. Duty to Provide Information

The permittee shall furnish to the Department, within a reasonable time, any information which the Department may request to determine whether cause exists for revoking, modifying and reissuing, or terminating this permit, or to determine compliance with this permit. The permittee shall also furnish to the Department, upon request, copies of records required to be kept by this permit.

F. Other Information

When the permittee becomes aware that it failed to submit any relevant facts in a permit application, or submitted incorrect information in a permit application or any report to the Department, it shall promptly submit such facts or information with a narrative explanation of the circumstances of the omission or incorrect submittal and why they weren't supplied earlier.

G. Signatory Requirements

All applications, reports or information submitted to the Department or the EPA shall be signed and certified.

1. All permit applications shall be signed as follows:

   a. For a corporation: by a responsible corporate officer;

b. For a partnership or sole proprietorship: by a general partner or the proprietor, respectively;

c. For a municipality, State, Federal, or other public agency: by either a principal executive officer or ranking elected official.

2. All reports required by the permit and other information requested by the Department shall be signed by a person described above or by a duly authorized representative of that person. A person is considered a duly authorized representative only if:

a. The authorization is made in writing by a person described above and submitted to the Department; and

b. The authorization specified either an individual or a position having responsibility for the overall operation of the regulated facility or activity, such as the position of plant manager, operator of a well or a well field, superintendent, position of equivalent responsibility, or an individual or position having overall responsibility for environmental matters for the company. (A duly authorized representative may thus be either a named individual or an individual occupying a named position.)

3. Changes to authorization. If an authorization under Part IV.G.2 of this permit is no longer accurate because a different individual or position has responsibility for the overall operation of the facility, a new authorization satisfying the requirements of Part IV.G.2 of this permit must be submitted to the Department prior to or together with any reports, information, or applications to be signed by an authorized representative.

4. Certification. Any person signing a document under this section shall make the following certification:

> "I certify under penalty of law that this document and all attachments were prepared under my direction or supervision in accordance with a system designed to assure that qualified personnel properly gather and evaluate the information submitted. Based on my inquiry of the person or persons who manage the system, or those persons directly responsible for gathering the information, the information submitted is, to the best of my knowledge and belief, true, accurate, and complete. I am aware that there are significant penalties for submitting false information, including the possibility of fine and imprisonment for knowing violations."

H. Penalties for Falsification of Reports

The Montana Water Quality Act provides that any person who knowingly makes any false statement, representation, or certification in any record or other document

submitted or required to be maintained under this permit, including monitoring reports or reports of compliance or noncompliance shall, upon conviction be punished by a fine of not more than $25,000 per violation, or by imprisonment for not more than six months per violation, or by both.

I. Availability of Reports

Except for data determined to be confidential under 40 CFR Part 2, all reports prepared in accordance with the terms of this permit shall be available for public inspection at the offices of the Department. As required by the Clean Water Act, permit applications, permits and effluent data shall not be considered confidential.

J. Oil and Hazardous Substance Liability

Nothing in this permit shall be construed to preclude the institution of any legal action or relieve the permittee from any responsibilities, liabilities, or penalties to which the permittee is or may be subject under Section 311 of the Clean Water Act.

K. Property or Water Rights

The issuance of this permit does not convey any property or water rights of any sort, or any exclusive privileges, nor does it authorize any injury to private property or any invasion of personal rights, nor any infringement of federal, state or local laws or regulations.

L. Severability

The provisions of this permit are severable, and if any provision of this permit, or the application of any provision of this permit to any circumstance, is held invalid, the application of such provision to other circumstances, and the remainder of this permit, shall not be affected thereby.

M. Transfers

This permit may be automatically transferred to a new permittee if:

1. The current permittee notifies the Department at least 30 days in advance of the proposed transfer date;

2. The notice includes a written agreement between the existing and new permittees containing a specific date for transfer of permit responsibility, coverage, and liability between them;

3. The Department does not notify the existing permittee and the proposed new permittee of an intent to revoke or modify and reissue the permit. If this notice is not received, the transfer is effective on the date specified in the agreement mentioned in Part IV.M.2 of this permit; and

4. Required annual and application fees have been paid.

N. Fees

The permittee is required to submit payment of an annual fee as set forth in ARM 17.30.201. If the permittee fails to pay the annual fee within 90 days after the due date for the payment, the Department may:

1. Impose an additional assessment computed at the rate established under ARM 17.30.201; and,

2. Suspend the processing of the application for a permit or authorization or, if the nonpayment involves an annual permit fee, suspend the permit, certificate or authorization for which the fee is required. The Department may lift suspension at any time up to one year after the suspension occurs if the holder has paid all outstanding fees, including all penalties, assessments and interest imposed under this sub-section. Suspensions are limited to one year, after which the permit will be terminated.

O. Reopener Provisions

This permit may be reopened and modified (following proper administrative procedures) to include the appropriate effluent limitations (and compliance schedule, if necessary), or other appropriate requirements if one or more of the following events occurs:

1. Water Quality Standards: The water quality standards of the receiving water(s) to which the permittee discharges are modified in such a manner as to require different effluent limits than contained in this permit.

2. Water Quality Standards are Exceeded: If it is found that water quality standards or trigger values in the receiving stream are exceeded either for parameters included in the permit or others, the department may modify the effluent limits or water management plan.

3. TMDL or Wasteload Allocation: TMDL requirements or a wasteload allocation is developed and approved by the Department and/or EPA for incorporation in this permit.

4. Water Quality Management Plan: A revision to the current water quality management plan is approved and adopted which calls for different effluent limitations than contained in this permit.

5. Toxic Pollutants: A toxic standard or prohibition is established under Section 307(a) of the Clean Water Act for a toxic pollutant which is present in the discharge and such standard or prohibition is more stringent than any limitation for such pollutant in this permit.

6. Toxicity Limitation: Change in the whole effluent protocol, or any other conditions related to the control of toxicants have taken place, or if one or more of the following events have occurred:

a. Toxicity was detected late in the life of the permit near or past the deadline for compliance.

b. The TRE/TIE results indicated that compliance with the toxic limits will require an implementation schedule past the date for compliance.

c. The TRE/TIE results indicated that the toxicant(s) represent pollutant(s) that may be controlled with specific numerical limits.

d. Following the implementation of numerical controls on toxicants, a modified whole effluent protocol is needed to compensate for those toxicants that are controlled numerically.

e. The TRE/TIE revealed other unique conditions or characteristics which, in the opinion of the Department, justify the incorporation of unanticipated special conditions in the permit.

## V. DEFINITIONS

1. **"Act"** means the Montana Water Quality Act, Title 75, chapter 5, MCA.

2. **"Administrator"** means the administrator of the United States Environmental Protection Agency.

3. **"Acute Toxicity"** occurs when 50 percent or more mortality is observed for either species (See Part I.C of this permit) at any effluent concentration. Mortality in the control must simultaneously be 10 percent or less for the effluent results to be considered valid.

4. **"Arithmetic Mean" or "Arithmetic Average"** for any set of related values means the summation of the individual values divided by the number of individual values.

5. **"Average Monthly Limitation"** means the highest allowable average of daily discharges over a calendar month, calculated as the sum of all daily discharges measured during a calendar month divided by the number of daily discharges measured during that month.

6. **"Bypass"** means the intentional diversion of waste streams from any portion of a treatment facility.

7. **"Chronic Toxicity"** means when the survival, growth, or reproduction, as applicable, for either test species, at the effluent dilution(s) designated in this permit (see Part I.C.), is significantly less (at the 95 percent confidence level) than that observed for the control specimens.

8. **"Composite samples"** means a sample composed of two or more discrete aliquots (samples). The aggregate sample will reflect the average quality of the water or wastewater in the compositing or sample period. Composite sample may be composed of constant volume aliquots collected at regular intervals (simple composite) or flow proportioned.

9. **"Daily Discharge"** means the discharge of a pollutant measured during a calendar day or any 24-hour period that reasonably represents the calendar day for purposes of sampling. For pollutants with limitations expressed in units of mass, the daily discharge is calculated as the total mass of the pollutant discharged over the day. For pollutants with limitations expressed in other units of measurement, the daily discharge is calculated as the average measurement of the pollutant over the day.

10. **"Daily Maximum Limit"** means the maximum allowable discharge of a pollutant during a calendar day. Expressed as units of mass, the daily discharge is cumulative mass discharged over the course of the day. Expressed as a concentration, it is the arithmetic average of all measurements taken that day.

11. **"Department"** means the Montana Department of Environmental Quality (MDEQ). Established by 2-15-3501, MCA.

12. **"Director"** means the Director of the Montana Department of Environmental Quality.

13. **"Discharge"** means the injection, deposit, dumping, spilling, leaking, placing, or failing to remove any pollutant so that it or any constituent thereof may enter into state waters, including ground water.

14. **"EPA"** means the United States Environmental Protection Agency.

15. **"Federal Clean Water Act"** means the federal legislation at 33 USC 1251, *et seq.*

16. **"Grab Sample"** means a sample which is taken from a waste stream on a one-time basis without consideration of flow rate of the effluent or without consideration for time.

17. **"Instantaneous Maximum Limit"** means the maximum allowable concentration of a pollutant determined from the analysis of any discrete or composite sample collected, independent of the flow rate and the duration of the sampling event.

18. **"Instantaneous Measurement"**, for monitoring requirements, means a single reading, observation, or measurement.

19. **"Minimum Level"** (ML) of quantitation means the lowest level at which the entire analytical system gives a recognizable signal and acceptable calibration point for the analyte, as determined by the procedure set forth at 40 CFR 136. In most cases the ML is equivalent to the Required Reporting Value (RRV) unless otherwise specified in the permit. (ARM 17.30.702(22))

19. **"Mixing zone"** means a limited area of a surface water body or aquifer where initial dilution of a discharge takes place and where certain water quality standards may be exceeded.

20. **"Nondegradation"** means the prevention of a significant change in water quality that lowers the quality of high-quality water for one or more parameters. Also, the prohibition of any increase in discharge that exceeds the limits established under or determined from a permit or approval issued by the Department prior to April 29, 1993.

21. **"Regional Administrator"** means the administrator of Region VIII of EPA, which has jurisdiction over federal water pollution control activities in the state of Montana.

22. **"Severe property damage"** means substantial physical damage to property, damage to the treatment facilities which causes them to become inoperable, or

substantial and permanent loss of natural resources which can reasonably be expected to occur in the absence of a bypass. Severe property damage does not mean economic loss caused by delays in production.

23. **"TIE"** means a toxicity identification evaluation.

24. **"TMDL"** means the total maximum daily load limitation of a parameter, representing the estimated assimilative capacity for a water body before other designated uses are adversely affected. Mathematically, it is the sum of wasteload allocations for point sources, load allocations for non-point and natural background sources, and a margin of safety.

25. **"TRE"** means a toxicity reduction evaluation.

26. **"TSS"** means the pollutant parameter total suspended solids.

27. **"Upset"** means an exceptional incident in which there is unintentional and temporary noncompliance with technology-based permit effluent limitations because of factors beyond the reasonable control of the permittee. An upset does not include noncompliance to the extent caused by operational error, improperly designed treatment facilities, inadequate treatment facilities, lack of preventive maintenance, or careless or improper operation.

# MONTANA DEPARTMENT OF ENVIRONMENTAL QUALITY

## Permitting and Compliance Division

## Montana Pollutant Discharge Elimination System (MPDES)

# FACT SHEET

**Permittee:** **Butte Highlands JV, LLC**

**Permit No.:** **MT0031755**

**Receiving Waters:** **Basin Creek, Tributary to Fish Creek, Middle Fork of Moose Creek, Tributary to Middle Fork of Moose Creek**

**Facility Information**

| | |
|---|---|
| Name: | Butte Highlands Mine |
| Contact: | Steve Osterberg, VP Exploration |
| Phone: | (208) 664-4859 |
| County: | Silver Bow |
| Location: | Intersection of Highlands Road and Camp Creek Road<br>Latitude 45° 47’ 31” N, Longitude 112° 30’ 55” W |

**Fee Information**

| | |
|---|---|
| Major/Minor: | Major |
| Type: | Private |
| Number of Outfalls: | 4 (for fee determination only) |

# TABLE OF CONTENTS

**1 BACKGROUND ..... 4**

1.1 PERMIT AND APPLICATION INFORMATION ..... 4
1.2 DESCRIPTION OF FACILITY AND DISCHARGE POINTS ..... 4
*1.2.1 Description and Location of Facility ..... 5*
*1.2.2 Wastewater Treatment or Controls ..... 6*
*1.2.3 Discharge Points ..... 6*
*1.2.4 Permit Fee Determination ..... 7*
*1.2.5 Effluent Characteristics ..... 7*
*1.2.6 Planned Changes – Not Applicable ..... 8*
*1.2.7 Other Information ..... 8*
1.3 COMPLIANCE SUMMARY – NOT APPLICABLE ..... 8
*1.3.1 Compliance History ..... 8*
*1.3.2 Inspection Results ..... 8*

**2 RATIONALE FOR EFLUENT LIMITATIONS ..... 9**

2.1 TECHNOLOGY-BASED EFFLUENT LIMITATIONS (TBELS) ..... 9
*2.1.1 Scope and Authority ..... 9*
*2.1.2 Applicable Technology Standards ..... 10*
*2.1.3 TBEL Calculations ..... 11*
2.2 WATER QUALITY-BASED EFFLUENT LIMITATIONS (WQBELS) ..... 14
*2.2.1 Scope and Authority ..... 14*
*2.2.2 Applicable Water Quality Standards ..... 14*
*2.2.3 Impaired Waters ..... 17*
*2.2.4 Pollutants and Parameters of Concern ..... 19*
*2.2.5 Nondegradation Analysis ..... 21*
*2.2.6 Mixing Zones ..... 24*
*2.2.7 Reasonable Potential Analysis (RPA) and Design Conditions ..... 27*
*2.2.8 Water Quality-based Effluent Limitations (WQBELs) ..... 35*
*2.2.9 Whole Effluent Toxicity Limitations - Not Applicable ..... 38*
2.3 FINAL EFFLUENT LIMITATIONS ..... 39
*2.3.1 Anti-backsliding Analysis ..... 39*
*2.3.2 Stringency Analysis ..... 39*
*2.3.3 Additional Effluent Limitations and Conditions – Not Applicable ..... 44*
*2.3.4 Narrative Prohibitions—Outfalls 001-006 ..... 44*
2.4 INTERIM EFFLUENT LIMITATIONS – NOT APPLICABLE ..... 45
2.5 COMPLIANCE SCHEDULES – NOT APPLICABLE ..... 45

**3 RATIONALE FOR MONITORING AND REPORTING REQUIREMENTS ..... 46**

3.1 MONITORING LOCATIONS AND FREQUENCY ..... 46
*3.1.1 Storm Water Monitoring Requirements – Not Applicable ..... 53*
*3.1.2 Whole Effluent Toxicity Testing ..... 53*
*3.1.3 Reporting Requirements ..... 53*

**4 RATIONALE FOR SPECIAL CONDITIONS ..... 54**

4.1 ADDITIONAL MONITORING AND SPECIAL STUDIES ..... 54
*4.1.1 Ambient Monitoring ..... 54*
*4.1.2 Supplemental Effluent Monitoring – Not Applicable ..... 54*
*4.1.3 Ground Water Monitoring – Not Applicable ..... 54*
4.2 BEST MANAGEMENT PRACTICES AND POLLUTION PREVENTION ..... 54
*4.2.1 Land Application ..... 54*

*4.2.2 Storm Water Management – Not Applicable ..... 55*
4.3 REOPENER PROVISIONS ..... 55
**5 STANDARD CONDITIONS ..... 56**
**6 NONSIGNIFICANT DETERMINATION ..... 57**
**7 OTHER INFORMATION ..... 58**
**8 PUBLIC PARTICIPATION ..... 59**
8.1 NOTIFICATION OF INTERESTED PARTIES ..... 59
8.2 PUBLIC HEARING WRITTEN COMMENTS ..... 59
8.3 PERMIT APPEAL ..... 59
8.4 ADDITIONAL INFORMATION ..... 60

# 1 BACKGROUND

This fact sheet identifies the principal facts, and significant factual, legal, methodological, and policy issues considered in preparing a draft permit in accordance with Administrative Rules of Montana (ARM) 17.30.1371. A fact sheet is prepared for any draft permit that established new or amended effluent limitations or standards, schedules of compliance, variances, nonsignificance determinations under ARM 17.30.706, denial or granting of mixing zones under ARM 17.30.515, or other significant requirements.

The permit has been prepared under a standardized format that accommodates a broad range of discharge requirements for facilities other than Publicly Owned Treatment Works (POTW). This category includes facilities that discharge process and non-process wastewater, sewage, storm water and other wastes from non-POTWs. Only those sections or subsections of the permit that are specifically identified as "Not Applicable" have been determined not to apply to this permittee. Sections or subsections of this permit not specifically identified as "Not Applicable" are fully applicable to this permittee.

Butte Highlands JV, LLC (hereinafter permittee) is the owner and operator of Butte Highlands Mine (hereinafter facility), an active underground gold mine.

For the purposes of this permit and fact sheet, references to the "discharger" or "permittee" in applicable federal and state laws, regulations, policy, plans, or implementation procedures are held to be equivalent to references to the permittee in the permit and fact sheet.

## 1.1 Permit and Application Information

The permittee submitted an application for a new MPDES permit on March 26, 2012. Supplemental information was requested on April 26, 2012, and received on June 6, 2012. A site visit was conducted on June 22, 2012, to observe the facility and collect additional data to develop permit limitations and conditions. Based on discussions during the site visit, revised application pages were submitted on June 25, 2012. On July 2, 2012, the Montana Department of Environmental Quality (DEQ) determined the application was substantially complete, with a note that the required elements for the nondegradation review still needed to be submitted. On October 24, 2012, the required information for a nondegration review was submitted. On January 22, 2013, supplemental information was provided by the permittee in response to questions from DEQ on December 27, 2012. The NPDES permit rating work sheet was completed to determine whether the facility qualified as a major or minor source. The calculated score was 110, which classifies the facility as a major source.

## 1.2 Description of Facility and Discharge Points

This section describes the facility and discharge points (outfalls) as described in the permit application. As defined in ARM 17.30.1304, a facility or activity is any point source, including land appurtenances thereto, that are subject to regulation under the MPDES regulations. For the purposes of this permit, an outfall designates the location at which the facility or activity is authorized to discharge pollutants to state waters.

### *1.2.1 Description and Location of Facility*

The facility is an underground gold mine located along the continental divide approximately thirteen miles south of Butte. The facility is located on patented mining claims within the Beaverhead-Deerlodge national forest. The facility is located at the headwaters of Basin Creek, Fish Creek, and Moose Creek. Gold mining at this location dates back to 1868 and in the 1930's large scale mining and milling were conducted by the Butte Highlands Mining Company until 1942. In 2010 remediation of the historic adit, which is the headwater source for Basin Creek, was completed. The Environmental Assessment developed for the Exploration License states that the water produced from the mine is not anticipated to be acidic because the sulfide content of the geologic units is low and the water draining from the historic adit is nonacidic.

The permittee currently has Exploration License 00680 from DEQ's Environmental Management Bureau and the permittee is in the process of obtaining an Operating Permit. The issuance of the MPDES permit would allow the permitttee to discharge the ground water that has been encountered and complete the exploration phase prior to beginning full operation. During the operations phase, the permittee anticipates mining 400 tons of ore per day using a cut and fill method. The ore would be loaded into trucks and moved to a covered ore transfer facility near Interstate 15 where it would be loaded into highway legal trucks and hauled to the mill. The current plan is to ship the ore to the Golden Sunlight Mine for contract milling.

The permittee has applied to discharge treated wastewater to Basin Creek (Outfall 001), to a tributary of Fish Creek (Outfall 002), to the Middle Fork of Moose Creek (Outfall 003, 005, 006), and to a tributary of the Middle Fork of Moose Creek (Outfall 004) as shown in Figure 1. At present, the headwater for Basin Creek originates at a historic adit, which flows at approximately 150 gallons per minute (gpm). As the historic workings are dewatered during exploration and full operation, the permittee intends to discharge from the historic adit to maintain the headwater section of Basin Creek. Form 2D from the application lists an average flow of 750 gpm (1.08 million gallons per day (MGD)) from mine dewatering and 16 gpm from storm water. Water collected in the course of mine dewatering is directed to the sediment pond. Water from the sediment pond flows to the recycle pond and is then directed to the reverse osmosis system (Figure 2). The capacity of the two ponds is 2.5 million gallons. After treatment, wastewater is directed to the outfalls either in accordance with Figure 3 or the contingency plan described in Figure 4.

Storm water contributing to the facility's discharge is based on annual average precipitation (approximately 24 inches per year) for the site assuming no evaporation or infiltration occurs. Storm water from the site drains toward a runoff collection ditch which directs the water to the sediment pond and eventually to the recycle pond (Figure 2). The storage capacity of the two ponds at the facility is three times the volume that would fall on the 13 acres of the facility during a 100-year, 24-hour storm event.

Wastewater contributing to each outfall and the annual average flows are summarized in the table below.

| Sources of Wastewater Contributing to Each Outfall | | | |
|---|---|---|---|
| Outfall | Description | Average Flow | Intermittent (Y/N) |
| 001 | Mine Dewatering and Storm Water | 350 gpm (0.5 MGD) | N |
| 002 | Mine Dewatering and Storm Water | 200 gpm (0.29 MGD) | N |
| 003 | Mine Dewatering and Storm Water | 60 gpm (0.086 MGD) | N |
| 004 | Mine Dewatering and Storm Water | 140 gpm (0.2 MGD) | N |
| 005 | Mine Dewatering and Storm Water | 0 gpm | Y |
| 006 | Mine Dewatering and Storm Water | 0 gpm | Y |

For Outfall 001 the permittee proposes a total discharge of 350 gpm, which consists of 150 gpm to replace the historical flow from the adit plus an additional 200 gpm.

Outfall 005 (land application area) and Outfall 006 (ground water infiltration system) were used during the exploration phase and are being retained as contingency discharge locations in the event that another discharge point is unavailable (e.g., frozen pipe). The maximum discharge possible is 100 gpm for Outfall 005 and 60 gpm for Outfall 006. Because the application indicates a possible connection to surface water at these locations, Outfalls 005 and 006 will be treated as surface water outfalls.

### *1.2.2 Wastewater Treatment or Controls*

Treatment consists of collecting storm water and mine drainage in sediment and recycling ponds. The water from the recycle pond will be treated by reverse osmosis prior to discharge, as summarized in the table below.

| Treatment Process by Outfall | | |
|---|---|---|
| **Outfalls** | **Source** | **Treatment Process** |
| 001, 002, 003, 004, 005, 006 | Mine Dewatering and Storm water | Reverse Osmosis (Hyperfiltration) |

### *1.2.3 Discharge Points*

The permittee discharges or proposes to discharge wastewater from the point source outfalls described in Section 1.2.1 above to state waters at the locations identified in the table below. These locations were identified in the permittee's MPDES permit application. By definition, state waters means any body of water, irrigation system or drainage system, either surface or underground. Ponds, lagoons, or other waste impoundments used solely for treating, impounding, or transporting wastes are not state waters. Discharge to state waters is prohibited unless expressly authorized in the facility's discharge permit. The beneficial use classifications and applicable water quality standards for the receiving water are defined in Section 2 of this permit fact sheet.

| Discharge Location and Receiving Water | | | | |
|---|---|---|---|---|
| **Outfall** | **Latitude** | **Longitude** | **Receiving Water** | **Receiving Water Classification** |
| 001 | 45º 47′ 45′′ N | 112º 30′ 54″ W | Basin Creek | A-closed |
| 002 | 45º 47′ 34′′ N | 112º 29′ 50″ W | Tributary to Fish Creek | B-1 |
| 003 | 45º 47′ 09′′ N | 112º 31′ 37″ W | Middle Fork of Moose Creek | B-1 |
| 004 | 45º 47′ 00′′ N | 112º 31′ 31″ W | Tributary to Middle Fork of Moose Creek | B-1 |
| 005 | 45º 47′ 28′′ N | 112º 31′ 11″ W | Middle Fork of Moose Creek | B-1 |
| 006 | 45º 47′ 08′′ N | 112º 31′ 27″ W | Middle Fork of Moose Creek | B-1 |

### *1.2.4 Permit Fee Determination*

The Montana Water Quality Act (MWQA) requires that permit fees be assessed that are sufficient to cover the cost of administering the permit program (75-5-516, Montana Code Annotated (MCA)). Permit fees are based on the type of waste (sewage, process wastewater, storm water, noncontact cooling water, etc.) and the receiving water or stream segment. This analysis is based on ARM 17.30.201(6)(a), which states an application and annual fee for multiple outfalls is not required unless the discharges are to different receiving waters or result in multiple or variable effluent limits. The table below identifies, individually or by group, the type of wastewater and receiving water by outfall for which effluent limits will be required.

| Summary Outfall Categories for Fee Purposes | | | |
|---|---|---|---|
| **Group** | **Effluent Description** | **Receiving Water** | **Outfalls** |
| A | Mine Drainage, Storm Water | Basin Creek | 001 |
| B | Mine Drainage, Storm Water | Tributary to Fish Creek | 002 |
| C | Mine Drainage, Storm Water | Middle Fork of Moose Creek | 003, 005, 006 |
| D | Mine Drainage, Storm Water | Tributary to Middle Fork of Moose Creek | 004 |

### *1.2.5 Effluent Characteristics*

ARM 17.30.1371 requires that the permit fact sheet provide a description of the significant effluent characteristics of the wastes to be discharged. This information must be provided in the permit application as required by ARM 17.30.1322 and the code of federal regulations (CFR) at 40 CFR 122.21. This data must be collected over the previous 3-5 years and must reflect the current operation of the facility. For new discharges or if no discharge has occurred, the permittee must provide a reasonable estimate of the pollutant concentration and the method for estimation.

Effluent characteristics are given in Appendix 3 based on information provided by the permittee on application form 2D. In addition to the requirements of ARM 17.30.1371 these effluent characteristics provide a basis for water quality-based effluent limitations (WQBEL) developed in Section 2.2.8 of this permit fact sheet, and for new or increased sources, fulfills the requirements of ARM 17.30.706(3). Outfalls with substantially identical effluents may be combined for reporting purposes. In addition to chemical specific characteristics, existing dischargers may be required to submit whole effluent toxicity (WET) data which is summarized in Section 1.3.

Sample and analytical procedures employed for this analysis must be in accordance with methods given in 40 CFR 136. If no analytical method is approved in 40 CFR 136, the applicant may use any suitable method but must provide a description of the method employed.

#### *1.2.6 Planned Changes – Not Applicable*

#### *1.2.7 Other Information*

This permit authorizes the permittee to discharge wastewater as part of their operations approved under Exploration License 00680. Butte Highlands is in the process of obtaining an Operating Permit from DEQ, which may require an Environmental Impact Statement (EIS). Because the facility size and treatment system proposed in the MPDES permit application is designed to full production scale, it is not anticipated that switching to an Operating Permit will result in any relevant changes to the MPDES permit. If additional conditions or requirements are identified in an EIS that are relevant to the MPDES permit, an amendment to this permit will be necessary.

### 1.3 Compliance Summary – Not Applicable

The application is for a new discharge. Therefore, facility-specific compliance data is not available.

**WHOLE EFFLUENT TOXICITY (WET)**

The application is for a new discharge. Therefore, facility-specific toxicity data is not available.

#### *1.3.1 Compliance History*

The application is for a new discharge. Therefore, facility-specific compliance information is not available.

#### *1.3.2 Inspection Results*

The application is for a new discharge. Therefore, facility-specific inspection information is not available.

# 2 RATIONALE FOR EFLUENT LIMITATIONS

The MWQA requires that DEQ clearly specify in the permit any limitations imposed on the volume, strength, and other significant characteristics of the waste to be discharged. The control of pollutants discharged is established through effluent limitations and other requirements in the permit. There are two principal bases for effluent limitations: technology-based effluent limitations (TBELs) that specify the minimum level of treatment or control for conventional, non-conventional, and toxic pollutants; and water quality-based effluent limitations (WQBELs) that attain and maintain applicable numeric and narrative water quality standards.

## 2.1 Technology-Based Effluent Limitations (TBELs)

Clean Water Act (CWA) section 402(a)(1) (33 U.S.C. 1342(a)(1)) and 40 CFR 125.3(a) require that permits issued under section 402, including those issued by state programs, contain TBELs that implement the technology-based treatment requirements specified in the CWA. These technology-based requirements may be national technology standards for existing sources or new sources established by the United States Environmental Protection Agency (EPA) pursuant to Section 304 of the CWA, or, in some cases, standards established by the permit writer on a case-by-case basis.

### *2.1.1 Scope and Authority*

EPA promulgates effluent guidelines under the authority of Sections 301, 304, 306, 307, 308, 402, and 501 of the CWA (33 U.S.C. 1311, 1314, 1316, 1318, 1342, and 1361). The Board of Environmental Review (Board) pursuant to 75-5-304(1), MCA, has adopted effluent limitations and standards and new source performance standards in Title 17, Chapter 30, Subchapter 12 based on the applicable federal regulation. EPA has promulgated national technology-based standards of performance for both existing and new sources at 40 CFR Subchapter N for dischargers other than POTWs.

Effluent guidelines establish the following standards for direct discharges from facilities other than POTWs:

- Best practicable treatment control technology (BPT) represents the average of the best performance by plants within an industrial category or subcategory. BPT standards apply to toxic, conventional, and non-conventional pollutants discharged by an existing discharge or new discharge that is not a new source.

- Best available technology economically achievable (BAT) represents the best existing performance of treatment technologies that are economically achievable within an industrial point source category. BAT standards apply to toxic and non-conventional pollutants discharged by an existing discharge or new discharge that is not a new source.

- Best conventional pollutant control technology (BCT) represents the control of conventional pollutants including biochemical oxygen demand (BOD), total suspended solids (TSS), fecal coliform, pH, and oil and grease in an existing discharge or new discharge that is not a new source. The BCT standard is established after considering the “cost reasonableness” of the relationship between the cost of attaining a reduction in effluent discharge and the benefits that would result, and also the cost effectiveness of additional industrial treatment beyond BPT.

- New source performance standards (NSPS) represent the best available demonstrated control technology standards. The intent of NSPS guidelines is to set limitations that represent state-of-the-art treatment technology for new sources. A source is a new source if it meets the definition of new source in ARM 17.30.1304 and 1340(1) and a new source performance standard is independently applicable to it. If there is no such independently applicable standard, the source is a new discharger [ARM 17.30.1340(2)]. A source is an existing source if it is not a new source or a new discharger. For purposes of applying effluent guidelines, the existing sources standards (BPT, BCT, and BAT) apply to existing sources and new dischargers. NSPS apply to new sources.

Pursuant to section 402(a)(2) of the federal CWA (33 U.S.C. 1342(a)(2)), where EPA has not established effluent guidelines that are applicable to a particular class or category of industrial discharger or to a specific discharge, the permit writer establishes applicable technology-based treatment requirements on a case-by-case basis using best professional judgment (BPJ). Regulations for establishing these case-by-case requirements using BPJ are given in 40 CFR 125.3 and ARM 17.30.1203.

Finally, ARM 17.30.1345(1) requires that permit limitations, standards and prohibitions must be established for each outfall or discharge point of the permitted facility, except that best management practices may be imposed under 40 CFR 122.44(k) to control or abate pollution, including: 1) as authorized under section 304(e) of the federal CWA for the control of toxic pollutants or hazardous wastes; 2) as authorized under section 402(p) of the federal CWA for the control of storm water dischargers; 3) when numeric effluent limitation are infeasible; and, 4) when the practices are reasonably necessary to achieve effluent limitation or standards or to carry out the purposes and intent of the CWA. Compliance with TBEL must be measured prior to dilution with the receiving water.

### *2.1.2 Applicable Technology Standards*

The technology standards applicable to the facility are described below.

**EFFLUENT GUIDELINES**

EPA has promulgated effluent guidelines in 40 CFR Part 440, Subpart J for facilities in the Copper, Lead, Zinc, Gold, Silver, and Molybdenum Ores Subcategory. These effluent guidelines are found at 40 CFR 440.100 – 440.104. The guidelines address the following processes employed or other activities conducted at the facility:

- 40 CFR 440.102(a)—BPT effluent guidelines for mine drainage
- 40 CFR 440.103(a)—BAT effluent guidelines for mine drainage
- 40 CFR 440.104(a)—NSPS effluent guidelines for mine drainage

**Applicable Effluent Guidelines—Outfalls 001-006**

Processes and activities conducted at the facility contributing to the discharge from Outfalls 001-006 that are addressed by the applicable effluent guidelines are as follows:

- Mine Dewatering
- Storm water that comes in contact with waste rock

DEQ has determined, based on the information given in the discharger's permit application, and summarized in Section 1 of this fact sheet, that the source of discharge from Outfalls 001-006 meets the definition of a new source and that NSPS are applicable.

The applicable effluent guidelines in 40 CFR 440.102, 40 CFR 440.103, and 40 CFR 440.104 are summarized in the tables below.

| 40 CFR 440.102(a) – BPT for Mine Drainage | | | | |
|---|---|---|---|---|
| **Parameter** | **Performance Standard** | **Units** | **30-day Average Limitation** | **Daily Maximum Limitation** |
| Total Suspended Solids (TSS) | BPT | mg/L | 20.0 | 30.0 |
| Copper | BPT | mg/L | 0.15 | 0.30 |
| Zinc | BPT | mg/L | 0.75 | 1.5 |
| Lead | BPT | mg/L | 0.3 | 0.6 |
| Mercury | BPT | mg/L | 0.001 | 0.002 |
| pH | BPT | S.U. | Between 6.0 and 9.0 at all times | |

| 40 CFR 440.103(a) – BAT for Mine Drainage | | | | |
|---|---|---|---|---|
| **Parameter** | **Performance Standard** | **Units** | **30-day Average Limitation** | **Daily Maximum Limitation** |
| Copper | BAT | mg/L | 0.15 | 0.30 |
| Zinc | BAT | mg/L | 0.75 | 1.5 |
| Lead | BAT | mg/L | 0.3 | 0.6 |
| Mercury | BAT | mg/L | 0.001 | 0.002 |
| Cadmium | BAT | mg/L | 0.05 | 0.10 |

| 40 CFR 440.104(a) – NSPS for Mine Drainage | | | | |
|---|---|---|---|---|
| **Parameter** | **Performance Standard** | **Units** | **30-day Average Limitation** | **Daily Maximum Limitation** |
| Total Suspended Solids (TSS) | NSPS | mg/L | 20.0 | 30.0 |
| Copper | NSPS | mg/L | 0.15 | 0.30 |
| Zinc | NSPS | mg/L | 0.75 | 1.5 |
| Lead | NSPS | mg/L | 0.3 | 0.6 |
| Mercury | NSPS | mg/L | 0.001 | 0.002 |
| Cadmium | NSPS | mg/L | 0.05 | 0.10 |
| pH | NSPS | S.U. | Between 6.0 and 9.0 at all times | |

The effluent guidelines in 40 CFR 440.104(b, c, and d), no discharge of process wastewater from mills, were not included for this facility because all milling will occur off-site.

### *2.1.3 TBEL Calculations*

State and federal regulations include specific requirements for how TBELs for industrial facilities are to be calculated from the appropriate standards:

- ARM 17.30.1345(2) requires that any permit limitations, standards, or other prohibitions which are based on units of production (or other measure of operation) must be based on a reasonable

measure of actual production of the facility and not on the designed production capacity. The permit may include a condition establishing alternative permit limitations, standards, or prohibitions based upon anticipated increased or decreased production levels, however, these alternate limits may not exceed maximum production capacity. In calculating alternative permit limitations, the permit must satisfy the requirement of ARM 17.30.1345(4).

- All permit effluent limitations, standards or prohibitions for a metal must be expressed as *total recoverable metal* as defined in 40 CFR 136 unless: 1) the applicable effluent standard or limitation has been expressed in another form; 2) in establishing permit limits on a case-by-case basis under 40 CFR 125.3 (ARM 17.30.1203); or 3) the approved method for the metal only measures the dissolved form (e.g. hexavalent chromium) (ARM 17.30.1345(5)).

- For continuous discharges, all permit effluent limitations, standards, and prohibitions must, unless impracticable, be stated as maximum daily and average monthly discharge limitations for all dischargers other than publicly-owned treatment works (POTWs) (ARM 17.30.1345(6)).

- Dischargers that are not continuous must be particularly described and limited, considering, as appropriate, frequency, total mass, maximum rate of discharge of pollutants during the discharge, and prohibition or limitations of specified pollutants by mass, concentration, or other appropriate measure (ARM 17.30.1345(7)).

- All pollutants limited in permits must have limitations, standards, or prohibitions expressed in terms of mass except for: pH, temperature, radiation, or other pollutants that cannot be appropriately expressed by mass; when applicable standards and limitations are expressed in terms of other units of measurement; or if in establishing limitations on a case-by-case basis, limitations expressed in terms of mass are infeasible because the mass of the pollutant discharged cannot be related to a measure of operation (ARM 17.30.1345(8)).

**PRODUCTION DATA FOR APPLICATION OF EFFLUENT GUIDELINES**

The average daily production or other operational values for the past three to five years are used to determine a reasonable measure of actual production as required in ARM 17.30.1345(2) for any permit limitations, standards, or other prohibitions based on units of production or other measure of operation.

**Production Data—Outfalls 001-006 – Not Applicable**

Production data is not applicable to the TBELs for this facility.

**FINAL TBELs**

The table below summarizes the TBELs for the permittee.

**TBELs—Outfalls 001-006**

| Parameter | Units | Average Monthly Limitation | Maximum Daily Limitation |
|---|---|---|---|
| Total Suspended Solids | mg/L | 20 | 30 |
| Copper | mg/L | 0.15 | 0.3 |
| Cadmium | mg/L | 0.05 | 0.1 |
| Lead | mg/L | 0.3 | 0.6 |
| Mercury | mg/L | 0.001 | 0.002 |
| Zinc | mg/L | 0.75 | 1.5 |
| pH | S.U. | Within the range 6.0 - 9.0 | |

## 2.2 Water Quality-Based Effluent Limitations (WQBELs)

Section 301(b) of the CWA and 40 CFR 122.44(d), incorporated into ARM 17.30.1344(2)(b) by reference, require that permits include limitations more stringent than applicable federal technology-based requirements where necessary to achieve applicable water quality standards. ARM 17.30.635 requires that the degree of waste treatment required to restore and maintain the quality of state water shall be based on the surface water quality standards, and: 1) the state's policy of nondegradation of existing water quality in 75-5-303, MCA; 2) present and anticipated (designated) uses of the receiving water; 3) the quality and nature of flow of the receiving water; 4) the quantity and quality of sewage, industrial, or other wastes to be treated; and, 5) the presence or absence of other sources of pollution in the watershed.

### *2.2.1 Scope and Authority*

The MWQA at 75-5-401(2), MCA states that a permit may only be issued if DEQ finds that the issuance or continuance of the permit will not result in pollution of any state waters. Montana water quality standards at ARM 17.30.637(2) require that no wastes may be discharged such that the waste either alone or in combination with other wastes will violate or can reasonably be expected to violate any standard. ARM 17.30.1344(1) adopts by reference 40 CFR 122.44 which states that MPDES permits shall include limits on all pollutants which will cause, or have a reasonable potential to cause an excursion of any water quality standard, including narrative standards.

The MWQA, Title 75, Part 3 requires the Board to establish the classification of all state waters in accordance with their present and future most beneficial uses; to formulate and adopt standards of water quality, giving consideration to the economics of waste treatment and prevention; adopt rules implementing the state's nondegradation policy; and adopt rules governing mixing zones. The Montana Surface Water Quality Standards and Procedures are found in ARM 17.30.601*et seq.*, which also includes, by reference, Circular DEQ-7—Montana Numeric Water Quality Standards. Montana's regulations on Non-Degradation of Water Quality are in ARM 17.30.701 *et seq.*and regulations on Mixing Zones in Surface and Ground Water are in ARM 17.30.501 *et seq.*

ARM 17.30.603 states that the standards in this subchapter are adopted to establish the maximum allowable change in surface water quality and to establish a basis for limiting the discharge of pollutants. ARM 17.30.620 states that the specific water quality standards along with the general provisions of ARM 17.30.635 through 637, 17.30.645, and 17.30.646 protect the beneficial uses set forth in the water-use classifications.

### *2.2.2 Applicable Water Quality Standards*

WQBELs are evaluated for all parameters of concern based on the water quality standards that are applicable to the receiving water at the point of discharge. The water use classification and water quality standards that apply to the receiving water body for each regulated outfall are summarized below.

**<u>Water Use Classification and Standards—Outfall 001</u>**

Outfall 001 discharges directly into Basin Creek which is located within the Upper Clark Fork watershed and is located in U.S. Geologic Survey (USGS) Hydrological Unit Code (HUC)

17010201. A Montana stream segment identification is not available for this stream. The designated water-use classification for the drainage is summarized below.

| Classification | Beneficial Uses |
|---|---|
| A-Closed | Drinking, culinary and food processing purposes after simple disinfection<br>Swimming and recreation<br>Growth and propagation of fish and associated aquatic life (although access restrictions to protect public health may limit actual use of A-closed waters for these uses) |

The general provisions of ARM 17.30.637(1) apply to all categories of state surface water. These provisions require that state waters must be free from substances which will: (a) settle to form objectionable sludge deposits or emulsions beneath the surface of the water or upon adjoining shorelines; (b) create floating debris, scum, a visible oil film (or be present in concentrations at or in excess of 10 milligrams per liter) or globules of grease or other floating materials; (c) produce odors, colors or other conditions as to which create a nuisance or render undesirable tastes to fish flesh or make fish inedible; (d) create concentrations or combinations of materials which are toxic or harmful to human, animal, plant or aquatic life; and (e) create conditions which produce undesirable aquatic life.

In addition to these general provisions, DEQ has determined that the following additional provisions of ARM 17.30.637 are applicable to the receiving water:

At the point of discharge the receiving water is considered perennial and therefore the specific water quality standards identified in ARM 17.30.621 are applicable to the receiving water for this outfall. More specifically for this permit, the water quality standards for A-closed streams require: no change from natural pH; no increase above naturally occurring turbidity or temperature; no increase above naturally occurring carcinogenic, bioconcentrating, toxic, or harmful parameters, pesticides, and organic and inorganic materials.

**Water Use Classification and Standards—Outfall 002**

Outfall 002 discharges directly into a tributary of Fish Creek. Fish Creek (Montana stream segment MT41G002_100) is located within the Upper Missouri Tributaries watershed and is located in USGS HUC 10020005. The designated water-use classification for the drainage is summarized below.

| Classification | Beneficial Uses |
|---|---|
| B-1 | Drinking, culinary and food processing purposes after conventional treatment<br>Bathing, swimming, and recreation<br>Growth and propagation of salmonid fishes and associated aquatic life, waterfowl, and furbearers<br>Agricultural and industrial water supply |

The general provisions of ARM 17.30.637(1) apply to all categories of state surface water. These provisions require that state waters must be free from substances which will: (a) settle to form objectionable sludge deposits or emulsions beneath the surface of the water or upon adjoining shorelines; (b) create floating debris, scum, a visible oil film (or be present in concentrations at or in excess of 10 milligrams per liter) or globules of grease or other floating materials; (c) produce odors, colors or other conditions as to which create a nuisance or render undesirable tastes to fish flesh or

make fish inedible; (d) create concentrations or combinations of materials which are toxic or harmful to human, animal, plant or aquatic life; and (e) create conditions which produce undesirable aquatic life.

In addition to these general provisions, DEQ has determined that the following additional provisions of ARM 17.30.637 are applicable to the receiving water:

At the point of discharge the receiving water is considered perennial and therefore the specific water quality standards identified in ARM 17.30.623 are applicable to the receiving water for this outfall.

**Water Use Classification and Standards—Outfalls 003, 005, 006**

Outfall 003 discharges directly into the Middle Fork of Moose Creek which is a tributary to Moose Creek (Montana stream segment MT41D002_050). Outfalls 005 and 006 are discharges to ground water that are hydraulically connected to the Middle Fork of Moose Creek. The Middle Fork of Moose Creek is located within the Upper Missouri Tributaries watershed and is located in USGS HUC 10020004. The designated water-use classification for the drainage is summarized below.

| Classification | Beneficial Uses |
|---|---|
| B-1 | Drinking, culinary and food processing purposes after conventional treatment<br>Bathing, swimming, and recreation<br>Growth and propagation of salmonid fishes and associated aquatic life, waterfowl, and furbearers<br>Agricultural and industrial water supply |

The general provisions of ARM 17.30.637(1) apply to all categories of state surface water. These provisions require that state waters must be free from substances which will: (a) settle to form objectionable sludge deposits or emulsions beneath the surface of the water or upon adjoining shorelines; (b) create floating debris, scum, a visible oil film (or be present in concentrations at or in excess of 10 milligrams per liter) or globules of grease or other floating materials; (c) produce odors, colors or other conditions as to which create a nuisance or render undesirable tastes to fish flesh or make fish inedible; (d) create concentrations or combinations of materials which are toxic or harmful to human, animal, plant or aquatic life; and (e) create conditions which produce undesirable aquatic life.

In addition to these general provisions, DEQ has determined that the following additional provisions of ARM 17.30.637 are applicable to the receiving water:

At the point of discharge the receiving water is considered perennial and therefore the specific water quality standards identified in ARM 17.30.623 are applicable to the receiving water for these outfalls.

**Water Use Classification and Standards—Outfall 004**

Outfall 004 discharges directly into a tributary to the Middle Fork of Moose Creek which is a tributary to Moose Creek (Montana stream segment MT41D002_050). The tributary to the Middle Fork of Moose Creek is located within the Upper Missouri Tributaries watershed and is located in USGS HUC 10020004. The designated water-use classification for the drainage is summarized below.

| Classification | Beneficial Uses |
|---|---|
| B-1 | Drinking, culinary and food processing purposes after conventional treatment<br>Bathing, swimming, and recreation<br>Growth and propagation of salmonid fishes and associated aquatic life, waterfowl, and furbearers<br>Agricultural and industrial water supply |

The general provisions of ARM 17.30.637(1) apply to all categories of state surface water. These provisions require that state waters must be free from substances which will: (a) settle to form objectionable sludge deposits or emulsions beneath the surface of the water or upon adjoining shorelines; (b) create floating debris, scum, a visible oil film (or be present in concentrations at or in excess of 10 milligrams per liter) or globules of grease or other floating materials; (c) produce odors, colors or other conditions as to which create a nuisance or render undesirable tastes to fish flesh or make fish inedible; (d) create concentrations or combinations of materials which are toxic or harmful to human, animal, plant or aquatic life; and (e) create conditions which produce undesirable aquatic life.

In addition to these general provisions, DEQ has determined that the following additional provisions of ARM 17.30.637 are applicable to the receiving water:

At the point of discharge the receiving water is considered perennial and therefore the specific water quality standards identified in ARM 17.30.623 are applicable to the receiving water for this outfall.

**Water Quality Standards**

The numeric water quality standards applicable to the discharges from Outfalls 001-006 are summarized in Appendix 1. The applicable water quality standards are based on the design conditions discussed in Section 2.2.7 of this permit fact sheet. The magnitude of some numeric standards are dependent on characteristics of the receiving water, such as hardness, pH, and temperature, summarized below. Receiving water characteristics are given in Appendix 2.

| Basis for Certain Numeric Standards | | |
|---|---|---|
| **Dependent Parameter** | **Measured Parameter** | **Statistic** |
| Metals (Cadmium, Copper, Chromium(III), Lead, Nickel, Silver, and Zinc) | Hardness (as $CaCO_3$) | $25^{th}$ percentile |
| Ammonia -- Acute | pH | $75^{th}$ percentile |
| Ammonia -- Chronic | pH | $75^{th}$ percentile |
| | Temperature | $75^{th}$ percentile |

### *2.2.3 Impaired Waters*

The MWQA at 75-5-702, MCA, requires that DEQ monitor state waters and assess the quality of those waters to identify surface water bodies or segments of water bodies whose designated uses are threatened or impaired. Section 75-5-703, MCA requires that DEQ complete a total maximum daily

load (TMDL) for those water bodies that are indentified as threatened or impaired. These requirements satisfy sections 303(d) and 305(b) of the federal Clean Water Act.

Upon approval of a TMDL, the wasteload allocation (WLA) developed for a point source must be incorporated into the facility's discharge permit. Pending completion of a TMDL on a listed waterbody, a point source discharge may continue or commence provided that: 1) the discharge is in conformance with the state's nondegradation policy and rules; 2) the discharge will not cause a decline in water quality for any parameter by which the water body is impaired; and, 3) minimum treatment requirements are met. A WLA is defined as the portion of the receiving water's loading capacity that is allocated to one of its existing or future point sources.

On September 21, 2000, a US District Judge issued an order stating that until all necessary TMDLs under section 303(d) of the Clean Water Act are established for a particular water quality limited segment, the state may not issue any new permits or increase permitted discharges under the MPDES program. Therefore, DEQ may not issue a permit that has a new or increased discharge to any receiving stream that appears on the 1996 303(d) list and remains listed on the 2012 303(d) list.

**Outfall 001**

2012 303(d) List
Basin Creek is not listed as an impaired water on Montana's 2012 Clean Water Act 303(d) list.

1996 303(d) List
Basin Creek is not listed as an impaired water on Montana's 1996 Clean Water Act 303(d) list.

**Outfall 002**

2012 303(d) List
Fish Creek is not listed as an impaired water on Montana's 2012 Clean Water Act 303(d) list. The 2012 305(b) report identifies Fish Creek as impaired because the beneficial uses of Aquatic Life and Primary Contact Recreation are not supported. Alteration in stream-side or littoral vegetative cover, low flow alterations, and sedimentation have been identified as the cause of these impairments. Fish Creek was removed from the 303(d) list on September 22, 2009, because a TMDL was completed for sediment and it was determined that a TMDL was not necessary for the remaining probable causes of impairment.

1996 303(d) List
Fish Creek is listed as an impaired water on Montana's 1996 Clean Water Act 303(d) list. Siltation has been identified as the cause of this impairment.

Approved TMDL
In September 2009 the "Upper Jefferson River Tributary Sediment TMDLs and Framework Water Quality Improvement Plan" was completed and includes Fish Creek. A WLA for sediment was not provided for new facilities in the TMDL.

**Outfall 003, 004, 005, 006**

2012 303(d) List
Moose Creek is not listed as an impaired water on Montana's 2012 Clean Water Act 303(d) list. The 2012 305(b) report identifies Moose Creek as impaired because the beneficial use of Aquatic Life is not supported and the beneficial use of Primary Contact Recreation is partially supported. Low flow alterations and sedimentation have been identified as the cause of these impairments. Moose Creek was removed from the 303(d) list on September 3, 2009, because a TMDL was completed for sediment and it was determined that a TMDL was not necessary for the remaining probable causes of impairment.

1996 303(d) List
Moose Creek is listed as an impaired water on Montana's 1996 Clean Water Act 303(d) list. Siltation has been identified as the cause of this impairment.

Approved TMDL
In September 2009 the "Middle and Lower Big Hole Planning Area TMDLs and Water Quality Improvement Plan" was completed and includes Moose Creek. A WLA for sediment was not provided for new facilities in the TMDL.

### *2.2.4 Pollutants and Parameters of Concern*

WQBELs are only assessed for those pollutants or parameters of concern (POC) based on the effluent characteristics and the water quality objectives for the affected receiving water(s). DEQ has identified the POC listed below for purposes of assessing WQBELs. Included in this list is any pollutant that has an assigned wasteload allocation as part of a TMDL. Effluent limitations for these pollutants are established regardless of whether or not there is reasonable potential for the pollutants to be present in the discharge at levels that would cause or contribute to a violation of water quality standards.

| Pollutants and Parameters of Concern | |
|---|---|
| **Parameter** | **Basis for Identifying as a Pollutant of Concern** |
| **Outfalls 001-006** | |
| TSS, Copper, Cadmium, Lead, Mercury, pH, Zinc | Applicable TBELs |
| NA – New Permit | Existing WQBEL |
| NA | Receiving Water Listed on 303(d) list |
| None | TMDL Complete and WLA Assigned Approved |
| NA – New Permit | Existing Sources: Critical effluent concentration exceeds any applicable water quality standard |
| Ammonia, Arsenic, Barium, Cadmium, Chromium, Copper, Fluoride, Lead, Mercury, Nickel, Nitrite + Nitrate, Nitrogen, pH, Phosphorus, Selenium, Strontium, TSS, Zinc | New Sources: Critical effluent concentration may exceed nondegradation criterion or cause change in existing water quality |

A TMDL has been completed for sediment for Fish Creek and Moose Creek, but a WLA for sediment was not provided for new facilities in either TMDL. As stated in the TMDL documents, "A percent reduction approach was used for the sediment TMDLs within this document because there is uncertainty associated with the loads derived from the source assessment, and using the estimated sediment loads creates a rigid perception that the loads are absolutely conclusive… daily loads should not be considered absolutely conclusive and may be refined in the future as part of the adaptive management process." The TMDL documents list an annual sediment load of 2,077 tons/yr for Fish Creek and 1,778 tons/yr for Moose Creek.

The permittee will capture and treat storm water prior to discharge. Therefore, sediment as discussed by the TMDL documents is not a concern. The permittee is permitted to discharge TSS which is a closely related parameter. The permittee will be required to meet nondegradation effluent limits that are based on the 25$^{th}$ percentile of instream TSS, but even at nondegradation levels there would still be an increase in the load of TSS in the stream. Calculations for the tons/yr of TSS added to Fish Creek based on the average monthly limit calculated for Outfall 002 equals 0.19 tons/yr, which is a 0.009% increase in the TMDL annual sediment load. Calculations for the tons/yr of TSS added to Moose Creek based on the average monthly limits calculated for Outfalls 003 and 004 equals 0.58 tons/yr, which is a 0.03% increase in the TMDL annual sediment load. Because the TMDLs are not absolutely conclusive and can be refined as part of an adaptive management process, the small addition of TSS to the system should not negatively impact the ability of the streams to meet the applicable water quality standards under the TMDL that was developed. Therefore, this permit will not adversely affect the water quality of Fish Creek or Moose Creek.

The application material indicates that the effluent temperature of 8.1 °C was derived from the mean ground water temperature of 5.6 °C and the expected increase of 2.5 °C from the RO system. The application materials indicate that the effluent will be piped from the RO system through piping

buried beneath the frost line to each discharge point and the piping will be sized to avoid friction, which will prevent additional heating. Based on this information, DEQ believes that the effluent will have the opportunity to re-acclimate to the surrounding ambient temperature and at the point of discharge the effluent temperature should not differ greatly from ground water that naturally contributes to the streams. Therefore, temperature is not considered a pollutant of concern for this facility, but monitoring will be required during the term of this permit.

The pH water quality standard for A-closed and B-1 streams will be compared to the TBEL and the more stringent limit will be applied. The A-closed water quality standard for pH is no change from natural pH. For Basin Creek the minimum and maximum reported pH from the data collected will be compared to the TBEL for pH. The B-1 water quality standard states that natural pH above 7.0 must be maintained above 7.0. The pH data for Fish Creek and both portions of Moose Creek have an average pH over 7.0. Therefore, for these streams a WQBEL pH limit of 7.0 to 8.5 will be compared to the TBEL for pH.

### *2.2.5 Nondegradation Analysis*

The MWQA includes a nondegradation policy at 75-5-303, MCA which protects existing water quality from undue degradation. This policy applies to any new or increased activity which results in a change in existing water quality. The MWQA states that it is unlawful to cause degradation of state waters unless authorized by DEQ pursuant to ARM 17.30.706-708. The regulations at ARM 17.30.701-718 implement the state's nondegradation policy. The level of protection provided to the receiving water(s) is specified in ARM 17.30.705(2) and conforms to three "tiers" of the federal antidegradation policy at 40 CFR 131.12. These three levels of protection are as follows:

*Protection of Existing Uses (Tier 1)***:** Existing and anticipated (designated) uses of state waters and the level of water quality necessary to protect those uses must be maintained and protected (ARM 17.30.705(2)(a)). Tier I protection applies to all state waters including waters not designated as high quality. The effluent limitations applied to outfalls subject to this level of protection are derived from and comply with the state's numeric and narrative water quality standards and, therefore, ensure the level of water quality necessary to attain and maintain existing and anticipated uses are fully protected. In accordance with ARM 17.30.706(3)(d) effluent limitations based on this level of protection might need to be based on protection of any downstream or downgradient receiving waters, which could require a higher level of protection.

*Protection of High Quality Waters (Tier 2)*: Unless authorized by DEQ under ARM 17.30.706 – 708 (authorization to degrade) or exempted from review under 75-5-317 MCA, the quality of high-quality waters must be maintained (ARM 17.30.705(2)(b) and 75-5-303(2), MCA). High quality waters, as defined in 75-5-103(10) MCA and ARM 17.30.702(8), includes all state surface waters except those not capable of supporting any one of the designated uses for their classification or that have zero flow or surface expression for more than 270 days during most years. Any water body for which the critical receiving water pollutant concentration ($C_s$) is less than the applicable water quality standard (S) is considered high quality. This determination is made on a parameter by parameter basis and may include waters listed on the state's 303(d) list.

*Protection of Outstanding Resource Waters (Tier 3)*: ARM 17.30.705(2)(c) requires that, for outstanding resource waters, no degradation is allowed and no permanent change in the quality of outstanding resources waters resulting from a new or increased point source discharge is allowed.

### DETERMINATION – NEW OR INCREASED SOURCES

Based on the information provided in Section 1.1 of this permit fact sheet, DEQ has made the following determinations with respect to the proposed discharges:

| New or Increased Source Determination | | | |
|---|---|---|---|
| **Outfall(s)** | **Receiving Water** | **Source Determination** | **Nondegradation - Level of Protection Required** |
| 001 | Basin Creek | New | Tier 2 |
| 002 | Tributary to Fish Creek | New | Tier 2 |
| 003, 005, 006 | Middle Fork of Moose Creek | New | Tier 2 |
| 004 | Tributary to Middle Fork of Moose Creek | New | Tier 2 |

## IMPLEMENTATION

### NEW SOURCES

For new sources discharging to Tier 1 receiving waters, i.e., receiving water is not high quality, WQBELs for pollutants or parameters are based on the numeric and narrative water quality standards for the applicable water-use classification and, therefore, will ensure the level of water quality necessary to attain and maintain existing and anticipated uses.

For new sources discharging to Tier 2 receiving waters in the absence of a request by the permittee to degrade state waters, DEQ develops WQBELs based on criteria for determining nonsignificant changes in water quality in ARM 17.30.715(1). For purposes of determining the significance of a proposed activity or discharge, the change is measured relative to the existing water quality. Existing water quality means the quality of the receiving water, including chemical, physical, and biological conditions immediately prior to commencement of the proposed activity or discharge, or that which can be adequately documented to have existed on or after July 1, 1971, whichever is the highest quality [ARM 17.30.702(4)]. DEQ uses the 25$^{th}$ percentile of the background water quality of the receiving water as the "existing water quality."

WQBELs for new discharges to Tier 2 waters are based on the nonsignificance criteria of ARM 17.30.715(1) which are summarized as follows:

| Category of Parameter | Criterion ($S_{ND}$) | Basis |
|---|---|---|
| Flow | ± 15% Mean Monthly Flow | 715(1)(a) |
| Carcinogen, Bioconcentration Factor > 300 | Background ($C_{.25}$) | 715(1)(b) |
| Toxic | 15% of applicable standard | 715(1)(c) |
| Toxic – Dissolved Oxygen | Background BOD | |
| Nutrients (Total Inorganic Nitrogen and Phosphorus) | Background ($C_{.25}$) plus trigger value | 715(1)(c) |
| Harmful (Includes EC and SAR) | 40% of applicable standard | 715(1)(f) |
| Narrative (Includes Conventional and Nonconventional Pollutants listed in 40 CFR 122, Appendix D, or DEQ Circular DEQ-7, and Total Nitrogen and Total Phoshorous) | Background ($C_{.25}$) | 715(1)(g) |

In addition, the water quality standards listed in ARM 17.30.621 for Basin Creek are equal to or more stringent than the nondegradation criteria listed above. Therefore, the limits for Basin Creek will be based on the more stringent criteria listed in ARM 17.30.621.

Because WQBELs for pollutants or parameters discharged to high quality waters are derived from and comply with the criteria for determining nonsignificant changes in water quality, they protect the existing water quality of a high quality receiving water to the extent practicable. The nondegradation criteria for the parameters of concern are summarized in Appendix 1. Though the nondegradation criteria are not numeric water quality standards, a discharge that meets these criteria is in compliance with Montana's nondegradation policy. New sources that are able to meet WQBELs based on application of nonsignificance criteria are not required to submit an authorization to degrade state waters under ARM 17.30.706-708. WQBELs calculated from nondegradation criteria are discussed in Appendix 5.

The information provided by the permittee indicate that the flow will increase by more than the amount specified in ARM 17.30.715(1)(a). As allowed by ARM 17.30.715(3), DEQ may determine that a change in water quality is nonsignificant based on information submitted by the applicant that demonstrates conformance with the guidance found in 75-5-301(5)(c), MCA. Therefore, DEQ requested that the permittee provide information indicating whether the increased flow would cause degradation of the receiving streams. The permittee conducted a geomorphological investigation and modeled the potential impacts from the increased flows. The information provided in the geomorphological investigation evaluated the stability of the stream channels by cataloging the composition and median diameter of the bed material. The Shields Equation was used to estimate the stability of the stream channel based on whether the bed material could be mobilized under current stream flows and with an additional 200 gpm. The increased flows in Basin Creek and Fish Creek would not change the stability of the stream bed; areas that are currently stable will remain stable and areas that are currently unstable and in the process of armoring will likely armor more quickly under the increased flows.

The analysis of streambed stability for the Middle Fork of Moose Creek and the tributary to the Middle Fork of Moose Creek was either inconclusive due to low flows or showed current instability. In contrast, the visual observations document that these streams appear to be stable under current conditions. The initial modeling analysis of stream bed stability for these streams does not appear to

be suitable to adequately determine the stability of the streams. The geomorphological study documents that the observed stream stability for the Middle Fork of Moose Creek and the tributary to the Middle Fork of Moose Creek may be due to factors such as dense wetland vegetation and/or elevation controls in the form of downstream beaver dams. Because these factors cannot be quantitatively assessed through the model, DEQ requested that the permittee estimate the bankfull capacity of each stream.

Following the United States Geological Survey approach published in 1989 "Methods for Estimating Monthly Streamflow Characteristics at Ungaged Sites in Western Montana", a bankfull capacity was estimated for monitoring station WS-7 (Basin Creek), WS-4 (tributary to Fish Creek), WS-6 (Middle Fork of Moose Creek), and WS-9 (tributary to the Middle Fork of Moose Creek). The maximum flow measured by the permittee plus the proposed discharge was compared to the estimated bankfull capacity. In all cases the maximum measured flow plus the discharge was less than the bankfull capacity.

| | Estimated Bankfull Capacity (gpm) | Maximum Measured Flow + Discharge (gpm) | Maximum Measured Flow (gpm) | Average Flow (gpm) |
|---|---|---|---|---|
| WS-7 | 628 | 350 | 150 | 92 |
| WS-4 | 2,172 | 450 | 250 | 91 |
| WS-6 | 875 | 190 | 130 | 35 |
| WS-9 | 675 | 340 | 200 | 126 |

DEQ has considered whether the information submitted by the permittee addresses the guidance found in 75-5-301(5)(c), MCA. These criteria include: i) equating significance with a potential to harm human health, a beneficial use, or the environment; ii) considering both the quantity and the strength of the pollutant; iii) considers the length of time the degradation will occur; and iv) considers the character of the pollutant so that greater significance is associated with carcinogens and toxins that bioaccumulate or biomagnify and lesser significance is associated with substances that are less harmful or less persistent.

The Montana Water Quality Act does not identify flow as a pollutant; therefore the increased flow will not have a significant effect on items (ii) or (iv). Based on the bankfull capacity information, the stream bed stability analysis, and visual observations of stability, DEQ finds the increased flow will not have significant impact on item (i) and will not lead to a period of degradation as addressed in item (iii). DEQ finds that the information submitted by the permittee demonstrates that the increased flow is nonsignificant in accordance with ARM 17.30.715(3). In addition, DEQ will require annual ambient monitoring consisting of baseline conditions of stream bed composition at two locations for each receiving stream and annual monitoring of stream bed composition at each monitoring location for further evaluation during permit renewal.

**INCREASED SOURCES**

DEQ has determined that there are no increased discharges subject to nondegradation requirements.

### *2.2.6 Mixing Zones*

A mixing zone is an area where the effluent mixes with the receiving water and certain numeric water quality standards may be exceeded [ARM 17.30.502(6)]. The Board has adopted rules governing the granting of mixing zones in surface and ground water at ARM 17.30.501-518. These

rules require that DEQ determine the applicability of any currently granted mixing zones in the permit renewal process [ARM 17.30.505(1)]. Mixing zones allowed under a permit issued prior to April 29, 1993, will remain in effect unless there is evidence that previously allowed mixing zones will impair existing or anticipated uses [ARM 17.30.505(1)(c)]. Discharges that do not conform to the criteria of ARM 17.30.501-518 are deemed to be causing impairment and are, therefore, subject to review and modification.

A mixing zone is necessary for any parameter which has a reasonable potential to exceed a water quality standard or nondegradation criterion. A discharger may request a standard or source specific mixing zone during the permit application process and provide the necessary information. DEQ must determine the appropriateness of the requested mixing zone and either grant the requested mixing zone, deny the mixing zone, or grant an alternative or modified mixing zone (ARM 17.30.515). Unless specifically granted and identified in the MPDES permit and permit fact sheet, a mixing zone is not assumed for any parameter.

The discharge must also comply with the general prohibitions of ARM 17.30.637(1), which require that state waters, including mixing zones, be free from certain substances. A mixing zone may not be granted for any parameter subject to a technology-based effluent limitation or standard, or, new source performance standards described in Section 2.1 of this fact sheet or ARM 17.30.1203-1209. For new sources and discharges, changes in water quality at the boundary of the mixing zone must be nonsignificant pursuant to the criteria of ARM 17.30.701-718.

**ACUTE MIXING ZONES**

In accordance with ARM 17.30.517(1)(b), acute water quality standards for aquatic life may not be exceeded in any portion of the mixing zone unless DEQ finds that allowing minimal initial dilution will not threaten or impair existing uses. An acute mixing zone (zone of initial dilution) is not granted for any toxic or persistent substances [ARM 17.30.506(1)(d)] unless the discharger demonstrates complete and rapid mixing. Complete and rapid mixing is demonstrated through the use of an effective effluent diffuser. To prevent acute lethality in the mixing zone, no more than 10% of the chronic mixing zone may be allowed for acute mixing and no acute mixing zone may be granted for acute WET. An acute mixing zone may not granted for any discharge to a lake or wetland.

**CHRONIC AND HUMAN HEALTH MIXING ZONE**

DEQ may grant a mixing zone for numeric chronic aquatic life, human health, and other narrative water quality standards given in Circular DEQ-7 and nondegradation criteria given in ARM 17.30.715. A mixing zone may also be granted for chronic WET. Chronic mixing zones are based on the design flow of the receiving water specified in ARM 17.30.635 and Section 2.2.7 of this fact sheet. For discharges to flowing rivers and stream, the design condition is the seven-day average, 10-year low flow (7Q10) and for nutrients DEQ uses the 30-day average, 10-year low flow (30Q10). DEQ may also grant a source-specific chronic and human health mixing zone for discharges to lakes or wetlands. For lakes, the area of the mixing zone must not exceed 5% of the area of the lake or extend more than 200 foot radius from the point of discharge, whichever is more restrictive.

For purposes of water quality-based permitting calculations, the mixing zone provided is generally equated with a dilution allowance (i.e., a percentage of critical low flow) or a dilution ratio (D).

ARM 17.30.516(3) defines dilution ratio as the 7Q10 of the stream segment without the discharge divided by the flow of the discharge. The length (L) of the mixing zone is the distance from the point of discharge, to the end of the mixing zone where all applicable water quality standards are met. The length of the mixing zone and dilution ratio must be smallest practicable size and have minimal effect on uses. The length of the mixing zone must be specified in the permit.

**GROUND WATER – NOT APPLICABLE**
Mixing zone for Outfall 006 was not requested.

**MIXING ZONE DETERMINATION - Outfalls 001 - 006**
The permittee has not requested a standard or source specific mixing zone. Therefore, the water quality assessment for a mixing zone in the next subsection is not applicable and no mixing zone is granted.

**WATER QUALITY ASSESSMENT**
In accordance with ARM 17.30.506(1) no mixing zone will be granted if it would threaten or impair existing beneficial uses. Along with the general provisions for designation of a mixing zone in ARM 17.30.505 and the specific requirements in ARM 17.30.507, a mixing zone will not be authorized if it would threaten or impair existing beneficial uses, as discussed below.

| Water Quality Assessment (ARM 17.30.506(2)) | |
|---|---|
| Condition | Basis |
| Biologically Important Area: Discuss presence of any species of special concern, endangered or listed species; does downstream receiving water support spawning or rearing habitat for these species. | NA |
| Drinking Water Intake: Distance to nearest downstream drinking water intake. | NA |
| Recreational Area: Distance to nearest downstream designated recreation area (fish access sites, public beach, etc.). | NA |
| Attraction to aquatic life: Describe thermal effect (heating or cooling) of discharge. | NA |
| Toxicity or Persistence of Substances:<br>1. Has effluent been adequately characterized for toxic and persistent parameters, including seasonal variation?<br>2. Has effluent been adequately characterized for WET, including seasonal variation?<br>3. Bioavailability of toxic or persistent parameters in far field considered. | NA |
| Passage of aquatic organisms:<br>1. Area or percent of receiving water unaffected by mixing at design flow.<br>2. If tributaries present in mixing zone discus why passage is not expected to be affected. | NA |
| Cumulative effects:<br>1. Adequate upstream characterization for all mixing zone parameters (min. 10 samples within 3 years).<br>2. Distance to nearest downstream point source discharge.<br>3. Distance to upstream to nearest point source discharge. | NA |

### *2.2.7 Reasonable Potential Analysis (RPA) and Design Conditions*

Montana water quality standards at ARM 17.30.637(2) state that no wastes may be discharged, either alone or in combination with other wastes, or activities, that will violate or can reasonably be expected to violate any of the standards. Federal regulations at 40 CFR 122.44(d), which are incorporated into ARM 17.30.1344 by reference, require that all effluents be assessed by the permitting authority to determine the need for WQBELs in the permit. Specifically, 40 CFR 122.44(d)(1)(i) states, limitations must be established in permits to control all pollutants or pollutant parameters that are or may be discharged at a level that will cause, have the reasonable potential to cause, or contribute to an excursion above any state water quality standard. A "reasonable potential analysis" is used to determine whether a discharge, alone or in combination with other sources of pollutants to a water body, could lead to an excursion above an applicable water quality standard.

40 CFR 122.44(d) requires that the procedures used by the permitting authority account for: existing controls on point and nonpoint sources of pollution; variability of the pollutant or pollutant parameter; sensitivity of the species to toxicity testing (WET); and, where appropriate the dilution of the effluent in the receiving water. For purposes of developing water quality-based effluent limitations and the RPA, DEQ uses a mass-balance equation, which is a simple, steady-state model. The mass-balance equation is used to determine the concentration of a pollutant of concern after accounting for other sources of pollution in the receiving water and any dilution provided by a mixing zone. The simple mass-balance equation applied to a river or stream is as follows:

$$Q_sC_s + Q_dC_d = Q_rC_r \qquad \textit{Equation 1}$$

Where:

| | | |
|---|---|---|
| $Q_s$ | = | critical stream flow above point of discharge |
| $C_s$ | = | critical upstream receiving water pollutant concentration |
| $Q_d$ | = | critical effluent flow |
| $C_d$ | = | critical effluent pollutant concentration |
| $Q_r$ | = | resultant in-stream flow after discharge ($Q_r = Q_s + Q_d$) |
| $C_r$ | = | resultant in-stream pollutant concentration (after available dilution) |

The values used to establish the maximum allowable change in surface water quality are based on the design conditions specified in the specific water quality standards in ARM 17.30.620-629 and 635 and are referred to in this fact sheet as critical conditions. The critical conditions that determine the values for the driving variables ($Q_s$, $C_s$, $Q_d$, $C_d$) in Equation 1 are discussed below. These critical conditions are incorporated into the mixing zone regulations and nondegradation regulations by reference.

The amount of pollutant in the discharge that the receiving water can assimilate and not exceed the applicable water quality standard is referred to as the wasteload allocation (WLA). The procedures for developing WLA follow federal guidance for developing waste load allocations (*Handbook: Stream Sampling for Waste Load Allocation Applications*, EPA/625/6-86/013, September 1986; *Technical Guidance Manual for Performing Waste Load Allocations, Book VII: Permit Averaging Period*, EPA, September 1984); and *Technical Support Document for Water Quality-based Toxics Control (TSD)*, EPA/505/2-90-001.

**CRITICAL STREAM FLOW ($Q_s$)**

Critical stream flow is based on the applicable provisions of ARM 17.30.620-629, which requires that discharge permits not cause receiving water concentrations to exceed applicable standards when stream flows equal or exceed the design flows specified in ARM 17.30.635(4). ARM 17.30.635(4) states that the receiving water design flow for point source discharges must be based on the minimum consecutive seven day average flow which may be expected to occur on the average once in 10 years (7Q10). If there are insufficient data to establish a 7Q10, DEQ must establish an acceptable stream flow. Effluent limitations for controlling nitrogen and phosphorus concentration in surface water are based on the minimum consecutive 30 day average flow which may be expected to occur on the average once in 10 years (30Q10) in accordance with ARM 17.30.635(4). For a discharge to a lake or wetland, the critical stream flow is 0 unless a dilution ratio has been specified in the mixing zone analysis, Section 2.2.6.

USGS data is not available for any of the streams. Flow data was collected by the permittee, but there is not enough information to calculate a 7Q10 or 30Q10 using the software package DFLOW. Therefore DEQ will estimate critical stream flows with the data that is available. Where there are greater than 30 data points, the 7Q10 with be estimated at the 1 percentile of the data and the 30Q10 will be estimated at the average. Where there is less than 30 data points, DEQ will be more conservative and estimate the 7Q10 at half of the 1 percentile and the 30Q10 at half of the average.

Critical stream flows for Outfalls 001-006 as well as the sources of information and period of record for determining the critical flows are summarized below.

| Critical Stream Flows | | | |
|---|---|---|---|
| **Outfall(s)** | **7Q10 (gpm)** | **30Q10 (gpm)** | **Information Source/Period of Record** |
| 001 | 44/2 = 22 | 109/2 = 54.5 | Permittee stream monitoring from August 2010 through August 2012 (24 data points) |
| 002 | 36/2 = 18 | 91/2 = 45.5 | Permittee stream monitoring from November 2008 through September 2011 (19 data points) |
| 003, 005, 006 | 1.0 | 35 | Permittee stream monitoring from November 2008 through August 2012 (36 data points) |
| 004 | 51/2 = 25.5 | 126/2 = 63 | Permittee stream monitoring from December 2011 through October 2012 (10 data points) |

**CRITICAL BACKGROUND RECEIVING WATER POLLUTANT CONCENTRATION ($C_s$)**

The critical pollutant concentration is the average concentration in the receiving water during the critical stream flow. Chronic standards for aquatic life are based on the 96-hour average concentration in the receiving water and acute standards are based on the one hour average concentration in the receiving water (Circular DEQ-7). Because baseline data is collected as single grab samples over time it does not represent the average concentration for either averaging period and therefore the background concentration must be determined using other methods.

For purposes of the reasonable potential analysis and determining assimilative capacity, the critical background concentration ($C_s$) is defined to be the 75$^{th}$ percentile or upper bound estimate of the interquartile range of the data. In some cases, including application of the nondegradation criteria in ARM 17.30.715(1), changes in existing water quality or the water quality standard is expressed

relative to the background concentration in the receiving water. In these situations the WQBEL is based on the lower bound estimate of the interquartile range (25th percentile value) to maintain the existing water quality of the receiving water.

Data used for this analysis must be collected within the previous 3-5 years and a minimum of 10 samples are necessary collected over a range of hydrological conditions. If fewer than 10 samples are available, the background concentration cannot be determined. See Appendix 2 for a more detailed description of the procedures and estimated value of $C_s$ for the applicable receiving waters.

**CRITICAL EFFLUENT FLOW ($Q_d$)**

Effluent flow is a measure of the average daily flow expected to occur over the next 5-year permit cycle or the effective life of the regulated facility or activity. The critical flow is based on the maximum 30-day (monthly) average over the previous permit cycle for existing facilities or estimated average daily flow for new discharges.

Critical effluent flows used for water quality assessment of discharges from Outfalls 001-006 as well as the sources of information and period of record for determining the critical effluent flows are summarized below.

| Outfall | Critical Effluent Flow | Information Source/Period of Record |
|---|---|---|
| 001 | 350 gpm | Form 2D, Section V |
| 002 | 200 gpm | Form 2D, Section V |
| 003 | 60 gpm | Form 2D, Section V |
| 004 | 140 gpm | Form 2D, Section V |
| 005 | 0 gpm | Form 2D, Section V |
| 006 | 0 gpm | Form 2D, Section V |

The permittee does not expect to utilize Outfall 005 or 006 except in a contingency situation (Figure 4). If Outfall 005 is utilized, it is expected to discharge 100 gpm. If Outfall 006 is utilized, it is expected to discharge 60 gpm. In addition, Figure 4 shows that in a contingency situation the flow for Outfall 001 may increase to 450 gpm.

**CRITICAL EFFLUENT POLLUTANT CONCENTRATION ($C_d$)**

The critical effluent concentration is based on the 95th percentile of the expected effluent concentration observed or predicted in the discharge. Due to the low frequency of samples and the non-normal distribution of most effluents, DEQ follows the estimation procedures described in EPA's *Technical Support Document for Water Quality Based Toxic Control*, EPA/505/2-90-001, March 1991, to estimate the 95th percentile of the daily values. Critical effluent concentration is not used to determine the value of a water quality-based effluent limitation.

Critical effluent pollutant concentrations ($C_{.95}$) and estimation procedures are given in Appendix 3 for Outfalls 001-006.

**REASONABLE POTENTIAL ANALYSIS (RPA)**

The mass-balance equation (Equation 1) can be expressed in terms of the dilution ratio at the edge of the approved mixing zone. The dilution ratio is the volume of receiving water at the edge of the

mixing zone to the volume of effluent at the edge of the mixing zone. Below is the mass-balance equation arranged to solve for the receiving water concentration of a pollutant of concern ($C_r$):

$$C_r = \frac{C_d + (D \times C_s)}{(1 + D)} \qquad \textit{Equation 2}$$

Where:

D = dilution ratio ($Q_s / Q_d$)

Effluent concentration data ($C_d$) and receiving water concentration data ($C_s$) are based on critical conditions as discussed in the previous section and the analysis presented in Appendix 3 and Appendix 2, respectively. A mixing zone was not requested, so D = 0.

Where the projected receiving water concentration ($C_r$) exceeds any applicable numeric standard for the parameters of concern, there is reasonable potential and a WQBEL must be calculated for that parameter. Appendix 4 of this permit fact sheet provides a complete description of the RPA and results for the applicable outfalls and discharges from this facility. A summary of this analysis is provided below.

| Reasonable Potential Analysis – Summary | | | |
|---|---|---|---|
| **Outfall** | **Parameters** | **RPA Determination (Y/N/U)** | **Rationale/Comments** |
| 001 | Ammonia (as N) | Y | Cr > $S_{ND}$ |
| 001 | Arsenic, Total Recoverable | Y | Cr > $S_{ND}$ |
| 001 | Barium, Total | N | Cr < $S_{ND}$ |
| 001 | Cadmium, Total Recoverable | Y | Cr > $S_{ND}$ |
| 001 | Chromium, Total Recoverable | Y | Cr > $S_{ND}$ |
| 001 | Copper, Total Recoverable | Y | Cr > $S_{ND}$ |
| 001 | Fluoride | Y | Cr > $S_{ND}$ |
| 001 | Lead, Total Recoverable | Y | Cr > $S_{ND}$ |
| 001 | Mercury, Total Recoverable | Y | Cr > $S_{ND}$ |
| 001 | Nickel, Total Recoverable | Y | Cr > $S_{ND}$ |
| 001 | Nitrite + Nitrate (as N) | Y | Cr > $S_{ND}$ |
| 001 | Nitrogen, Total | Y | Cr > $S_{ND}$ |
| 001 | Phosphorus, Total | Y | Cr > $S_{ND}$ |
| 001 | Selenium, Total Recoverable | Y | Cr > $S_{ND}$ |
| 001 | Strontium, Total Recoverable | N | Cr < $S_{ND}$ |
| 001 | Total Suspended Solids (TSS) | Y | Cr < $S_{ND}$, but TBEL requires WQBEL |
| 001 | Zinc, Total Recoverable | Y | Cr > $S_{ND}$ |

| Reasonable Potential Analysis – Summary | | | |
|---|---|---|---|
| **Outfall** | **Parameters** | **RPA Determination (Y/N/U)** | **Rationale/Comments** |
| 002 | Ammonia (as N) | N | Cr < $S_{ND}$ |
| 002 | Arsenic, Total Recoverable | N | Cr < $S_{ND}$ |
| 002 | Barium, Total | N | Cr < $S_{ND}$ |
| 002 | Cadmium, Total Recoverable | Y | Cr > $S_{ND}$ |
| 002 | Chromium, Total Recoverable | N | Cr < $S_{ND}$ |
| 002 | Copper, Total Recoverable | Y | Cr > $S_{ND}$ |
| 002 | Fluoride | N | Cr < $S_{ND}$ |
| 002 | Lead, Total Recoverable | Y | Cr < $S_{ND}$, but TBEL requires WQBEL |
| 002 | Mercury, Total Recoverable | Y | Cr > $S_{ND}$ |
| 002 | Nickel, Total Recoverable | N | Cr < $S_{ND}$ |
| 002 | Nitrite + Nitrate (as N) | N | Cr < $S_{ND}$ |
| 002 | Nitrogen, Total | Y | Cr > $S_{ND}$ |
| 002 | Phosphorus, Total | Y | Cr > $S_{ND}$ |
| 002 | Selenium, Total Recoverable | Y | Cr > $S_{ND}$ |
| 002 | Strontium, Total Recoverable | N | Cr < $S_{ND}$ |
| 002 | Total Suspended Solids (TSS) | Y | Cr > $S_{ND}$ |
| 002 | Zinc, Total Recoverable | Y | Cr < $S_{ND}$, but TBEL requires WQBEL |

| Reasonable Potential Analysis – Summary | | | |
|---|---|---|---|
| **Outfall** | **Parameters** | **RPA Determination (Y/N/U)** | **Rationale/Comments** |
| 003, 005, 006 | Ammonia (as N) | N | Cr < $S_{ND}$ |
| 003, 005, 006 | Arsenic, Total Recoverable | Y | Cr > $S_{ND}$ |
| 003, 005, 006 | Barium, Total | N | Cr < $S_{ND}$ |
| 003, 005, 006 | Cadmium, Total Recoverable | Y | Cr > $S_{ND}$ |
| 003, 005, 006 | Chromium, Total Recoverable | N | Cr < $S_{ND}$ |
| 003, 005, 006 | Copper, Total Recoverable | Y | Cr < $S_{ND}$, but TBEL requires WQBEL |
| 003, 005, 006 | Fluoride | N | Cr < $S_{ND}$ |
| 003, 005, 006 | Lead, Total Recoverable | Y | Cr < $S_{ND}$, but TBEL requires WQBEL |
| 003, 005, 006 | Mercury, Total Recoverable | Y | Cr > $S_{ND}$ |
| 003, 005, 006 | Nickel, Total Recoverable | N | Cr < $S_{ND}$ |
| 003, 005, 006 | Nitrite + Nitrate (as N) | N | Cr < $S_{ND}$ |
| 003, 005, 006 | Nitrogen, Total | Y | Cr > $S_{ND}$ |
| 003, 005, 006 | Phosphorus, Total | Y | Cr > $S_{ND}$ |
| 003, 005, 006 | Selenium, Total Recoverable | Y | Cr > $S_{ND}$ |
| 003, 005, 006 | Strontium, Total Recoverable | N | Cr < $S_{ND}$ |
| 003, 005, 006 | Total Suspended Solids (TSS) | Y | Cr > $S_{ND}$ |
| 003, 005, 006 | Zinc, Total Recoverable | Y | Cr < $S_{ND}$, but TBEL requires WQBEL |

| Reasonable Potential Analysis – Summary | | | |
|---|---|---|---|
| **Outfall** | **Parameters** | **RPA Determination (Y/N/U)** | **Rationale/Comments** |
| 004 | Ammonia (as N) | N | Cr < $S_{ND}$ |
| 004 | Arsenic, Total Recoverable | Y | Cr > $S_{ND}$ |
| 004 | Barium, Total | N | Cr < $S_{ND}$ |
| 004 | Cadmium, Total Recoverable | Y | Cr > $S_{ND}$ |
| 004 | Chromium, Total Recoverable | N | Cr < $S_{ND}$ |
| 004 | Copper, Total Recoverable | Y | Cr > $S_{ND}$ |
| 004 | Fluoride | N | Cr < $S_{ND}$ |
| 004 | Lead, Total Recoverable | Y | Cr > $S_{ND}$ |
| 004 | Mercury, Total Recoverable | Y | Cr > $S_{ND}$ |
| 004 | Nickel, Total Recoverable | N | Cr < $S_{ND}$ |
| 004 | Nitrite + Nitrate (as N) | N | Cr < $S_{ND}$ |
| 004 | Nitrogen, Total | Y | Cr > $S_{ND}$ |
| 004 | Phosphorus, Total | Y | Cr > $S_{ND}$ |
| 004 | Selenium, Total Recoverable | Y | Cr > $S_{ND}$ |
| 004 | Strontium, Total Recoverable | N | Cr < $S_{ND}$ |
| 004 | Total Suspended Solids (TSS) | Y | Cr > $S_{ND}$ |
| 004 | Zinc, Total Recoverable | Y | Cr < $S_{ND}$, but TBEL requires WQBEL |

**REASONABLE POTENTIAL ANALYSIS (RPA)—WHOLE EFFLUENT TOXICITY (WET)**

In addition to specific chemical parameters, federal regulations at 40 CFR 122.44(d)(1) specify that the discharge permit must contain effluent limitations to control toxicity when DEQ determines that the discharge has a reasonable potential to violate numeric or narrative criterion prohibiting toxicity. Montana water quality standards at ARM 17.30.635 prohibit the discharge of substances that will create concentrations or combinations of materials which are toxic or harmful to human, animal, plant, or aquatic life.

The following endpoints define acute and chronic toxicity for implementing these regulations:

- Acute toxicity occurs when, during an acute toxicity test, 50 percent mortality is observed for any tested species at any effluent concentration (i.e., $LC_{50} \leq 100\%$ effluent)
- Chronic toxicity occurs when, during a chronic toxicity test, the 25% inhibition concentration ($IC_{25}$) for any tested species is less than or equal to the percent effluent represented by the effluent concentration in the receiving water after accounting for any allowable mixing zone.

In order to account for the variability of the effluent and sensitivity of the species to the toxicity of the effluent, toxicity results are expressed in terms of toxicity units (TU), as follows:

- Toxic unit acute ($TU_A$) is the reciprocal of the effluent concentration that causes 50 percent of the organisms to die at the end of the acute exposure period, or,

$$TU_A = (LC_{50})^{-1} \times 100$$

- Toxicity unit chronic ($TU_C$) is the reciprocal of the effluent concentration that causes 25 percent of the organisms to exhibit a biological inhibition by the end of the chronic exposure period, or,

$$TU_C = (IC_{25})^{-1} \times 100$$

An effluent limit for acute toxicity is necessary if the projected $TU_A$ is greater than 1.0 and a chronic effluent limits is required for a projected $TU_C$ greater than 0.3.

WET testing is required for certain POTWs and industrial discharges that DEQ determines may contain toxic pollutants, or where these effluents have not been fully characterized for the presence of toxic pollutants. Minor POTWs and facilities which discharge non-process wastewaters are generally not required to conduct WET testing.

The permittee has not submitted acute and/or chronic WET testing data because this is a new permit. DEQ has determined that the permittee is required to conduct chronic WET testing for the effluent discharged from Outfalls 001 – 006 because the facility is classified as a major industrial discharger. In addition, the effluent is not fully characterized because a single bench scale analysis was used to estimate the effluent quality. Monitoring requirements are discussed in Section 3 of this fact sheet.

### *2.2.8 Water Quality-based Effluent Limitations (WQBELs)*

To establish WQBELs for an existing discharger DEQ first calculates WLAs from the numeric water quality standards (acute aquatic life, chronic aquatic life, and human health) or, for new discharges, from nondegradation criteria (see Section 2.2.5 above). These WLAs are then translated into maximum daily limitations (MDLs) and average monthly limitations (AMLs) to reflect the respective averaging times given in the surface water quality standards (ARM 17.30.635) and Circular DEQ-7.

The mass-balance equation (Equation 1) given in the previous section can be arranged to calculate the WLA ($C_{WLA}$) so that the discharge does not cause or contribute to an exceedance of the applicable water quality standard (S) under critical conditions:

$$\mathbf{C_{WLA} = S + D(S - C_s)}$$

Arranging the equation in this manner, it can be applied to any effluent and receiving water where the applicable dilution ratio is known. Where an existing discharge is to a water body that is not

meeting a concentration-based numeric standard in the water column the WLAs for that pollutant of concern may be set equal to the applicable numeric water quality standards.

WLAs are then translated into MDLs and AMLs using the procedures outlined in Appendix 5. The calculated WQBELs based on the applicable water quality standard, nondegradation criteria or approved TMDL, are presented in the table(s) below.

| WQBEL for Outfall 001 | | | | |
|---|---|---|---|---|
| **Parameter** | **Units** | **Average Monthly Limitation (AML)** | **Maximum Daily Limitation (MDL)** | **Basis for WQBEL Calculations** |
| Ammonia, Total (as N) | mg/L | 0.011 | 0.021 | A-closed Water Quality Standard |
| Arsenic, Total Recoverable | µg/L | 5.9 | 11.8 | A-closed Water Quality Standard |
| Cadmium, Total Recoverable | µg/L | 0.02 | 0.05 | A-closed Water Quality Standard |
| Chromium, Total Recoverable | µg/L | 0.29 | 0.59 | A-closed Water Quality Standard |
| Copper, Total Recoverable | µg/L | 1.1 | 2.1 | A-closed Water Quality Standard |
| Fluoride | µg/L | 65 | 131 | A-closed Water Quality Standard |
| Lead, Total Recoverable | µg/L | 0.12 | 0.25 | A-closed Water Quality Standard |
| Mercury, Total Recoverable | µg/L | 0.006 | 0.012 | A-closed Water Quality Standard |
| Nickel, Total Recoverable | µg/L | 0.13 | 0.26 | A-closed Water Quality Standard |
| Nitrite + Nitrate (as N) | mg/L | 0.11 | 0.23 | A-closed Water Quality Standard |
| Nitrogen, Total (as N) | mg/L | 0.18 | -- | A-closed Water Quality Standard |
| pH | S.U. | 7.6 | 8.3 | A-closed Water Quality Standard |
| Phosphorus, Total (as P) | mg/L | 0.012 | -- | A-closed Water Quality Standard |
| Selenium, Total Recoverable | µg/L | 0.17 | 0.34 | A-closed Water Quality Standard |
| Total Suspended Solids (TSS) | mg/L | 3.0 | 6.1 | A-closed Water Quality Standard |
| Zinc, Total Recoverable | µg/L | 2.0 | 4.1 | A-closed Water Quality Standard |

| WQBEL for Outfall 002 | | | | |
|---|---|---|---|---|
| **Parameter** | **Units** | **Average Monthly Limitation (AML)** | **Maximum Daily Limitation (MDL)** | **Basis for WQBEL Calculations** |
| Cadmium, Total Recoverable | µg/L | 0.05 | 0.1 | Nondegradation criteria |
| Copper, Total Recoverable | µg/L | 1.9 | 3.8 | Nondegradation criteria |
| Lead, Total Recoverable | µg/L | 0.8 | 1.6 | Nondegradation criteria |
| Mercury, Total Recoverable | µg/L | 0.006 | 0.012 | Nondegradation criteria |
| Nitrogen, Total (as N) | mg/L | 0.08 | -- | Nondegradation criteria |
| pH | S.U. | 7 | 8.5 | B-1 Water Quality Standard |
| Phosphorus, Total (as P) | mg/L | 0.02 | -- | Nondegradation criteria |
| Selenium, Total Recoverable | µg/L | 0.61 | 1.23 | Nondegradation criteria |
| Total Suspended Solids (TSS) | mg/L | 0.4 | 0.9 | Nondegradation criteria |
| Zinc, Total Recoverable | µg/L | 24.0 | 48.2 | Nondegradation criteria |

| WQBEL for Outfall 003, 005, 006 | | | | |
|---|---|---|---|---|
| **Parameter** | **Units** | **Average Monthly Limitation (AML)** | **Maximum Daily Limitation (MDL)** | **Basis for WQBEL Calculations** |
| Arsenic, Total Recoverable | µg/L | 2.0 | 3.9 | Nondegradation criteria |
| Cadmium, Total Recoverable | µg/L | 0.06 | 0.11 | Nondegradation criteria |
| Copper, Total Recoverable | µg/L | 2.1 | 4.3 | Nondegradation criteria |
| Lead, Total Recoverable | µg/L | 1 | 2 | Nondegradation criteria |
| Mercury, Total Recoverable | µg/L | 0.006 | 0.012 | Nondegradation criteria |
| Nitrogen, Total (as N) | mg/L | 0.27 | -- | Nondegradation criteria |
| pH | S.U. | 7 | 8.5 | B-1 Water Quality Standard |
| Phosphorus, Total (as P) | mg/L | 0.008 | -- | Nondegradation criteria |
| Selenium, Total Recoverable | µg/L | 0.61 | 1.23 | Nondegradation criteria |
| Total Suspended Solids (TSS) | mg/L | 1.0 | 2.0 | Nondegradation criteria |
| Zinc, Total Recoverable | µg/L | 27.6 | 55.5 | Nondegradation criteria |

| WQBEL for Outfall 004 | | | | |
|---|---|---|---|---|
| **Parameter** | **Units** | **Average Monthly Limitation (AML)** | **Maximum Daily Limitation (MDL)** | **Basis for WQBEL Calculations** |
| Arsenic, Total Recoverable | µg/L | 3.0 | 6.1 | Nondegradation criteria |
| Cadmium, Total Recoverable | µg/L | 0.04 | 0.08 | Nondegradation criteria |
| Copper, Total Recoverable | µg/L | 1.4 | 2.8 | Nondegradation criteria |
| Lead, Total Recoverable | µg/L | 0.5 | 1.0 | Nondegradation criteria |
| Mercury, Total Recoverable | µg/L | 0.006 | 0.012 | Nondegradation criteria |
| Nitrogen, Total (as N) | mg/L | 0.14 | -- | Nondegradation criteria |
| pH | S.U. | 7 | 8.5 | B-1 Water Quality Standard |
| Phosphorus, Total (as P) | mg/L | 0.012 | -- | Nondegradation criteria |
| Selenium, Total Recoverable | µg/L | 0.61 | 1.23 | Nondegradation criteria |
| Total Suspended Solids (TSS) | mg/L | 1.5 | 3.0 | Nondegradation criteria |
| Zinc, Total Recoverable | µg/L | 14.7 | 29.5 | Nondegradation criteria |

The final WQBELs must be compared to TBELs calculated for the same parameter to determine the most protective limitations that meet the requirements of both technology standards and water quality standards, including nondegradation criteria where applicable. After determining the most protective of the calculated limitations, DEQ considers the need for an anti-backsliding analysis before determining the final effluent limitations to include in the MPDES permit.

### *2.2.9 Whole Effluent Toxicity Limitations - Not Applicable*

## 2.3 Final Effluent Limitations

The final effluent limitations in the permit are based on the more stringent of the calculated TBELs and WQBELs for each parameter subject to an anti-backsliding analysis. The more stringent limitations will attain both the technology and water quality standards.

### *2.3.1 Anti-backsliding Analysis*

Section 402(o) of the Clean Water Act and 40 CFR 122.44(l) require, with some exceptions, that effluent limitations or conditions in reissued permits be at least as stringent as those in the existing permit. Because this is a new permit, an anti-backsliding analysis is not required.

### *2.3.2 Stringency Analysis*

The permit contains both technology-based and water quality-based numeric effluent limitations for individual pollutants. The technology-based effluent limitations consist of restrictions on TSS, pH, Copper, Cadmium, Lead, Mercury, and Zinc. This permit's technology-based pollutant restrictions implement the minimum, applicable federal technology-based requirements. In addition, the permit contains effluent limitations more stringent than the minimum, federal technology-based requirements that are necessary to meet water quality standards.

The tables below provide a summary of the final effluent limitations for Outfalls 001- 006.

## Final Numeric Effluent Limitations—Outfall 001 – 006

| Effluent Limitations for Outfall 001 | | | | |
|---|---|---|---|---|
| **Parameter and Code** | **Units** | **Average Monthly Limitation (AML)** | **Maximum Daily Limitation (MDL)** | **Basis** |
| Ammonia, Total (as N) (00610) | mg/L | 0.011[1] | 0.021[1] | A-closed Water Quality Standard |
| Arsenic, Total Recoverable (00978) | µg/L | 5.9 | 11.8 | A-closed Water Quality Standard |
| Cadmium, Total Recoverable (01113) | µg/L | 0.02[2] | 0.05 | A-closed Water Quality Standard |
| Chromium, Total Recoverable (01118) | µg/L | 0.29[3] | 0.59[3] | A-closed Water Quality Standard |
| Copper, Total Recoverable (01119) | µg/L | 1.1[4] | 2.1 | A-closed Water Quality Standard |
| Fluoride (00951) | µg/L | 65[5] | 131[5] | A-closed Water Quality Standard |
| Lead, Total Recoverable (01114) | µg/L | 0.12[6] | 0.25[6] | A-closed Water Quality Standard |
| Mercury, Total Recoverable (71901) | µg/L | 0.006 | 0.012 | A-closed Water Quality Standard |
| Nickel, Total Recoverable (01074) | µg/L | 0.13[7] | 0.26[7] | A-closed Water Quality Standard |
| Nitrite + Nitrate (as N) (00630) | mg/L | 0.11 | 0.23 | A-closed Water Quality Standard |
| Nitrogen, Total (as N) (00600) | mg/L | 0.18 | -- | A-closed Water Quality Standard |
| pH (00400) | S.U. | 7.6 | 8.3 | A-closed Water Quality Standard |
| Phosphorus, Total (as P) (00665) | mg/L | 0.012 | -- | A-closed Water Quality Standard |
| Selenium, Total Recoverable (00981) | µg/L | 0.17[8] | 0.34[8] | A-closed Water Quality Standard |
| Total Suspended Solids (TSS) (00530) | mg/L | 3.0 | 6.1 | A-closed Water Quality Standard |
| Zinc, Total Recoverable (01094) | µg/L | 2.0[9] | 4.1[9] | A-closed Water Quality Standard |

1. The permittee will be in compliance with the applicable effluent limitation if ammonia does not exceed the RRV of 0.07 mg/L.
2. The permittee will be in compliance with the applicable effluent limitation if cadmium does not exceed the RRV of 0.03 µg/L.
3. The permittee will be in compliance with the applicable effluent limitation if chromium does not exceed the RRV of 10 µg/L.
4. The permittee will be in compliance with the applicable effluent limitation if copper does not exceed the RRV of 2 µg/L.
5. The permittee will be in compliance with the applicable effluent limitation if fluoride does not exceed the RRV of 200 µg/L.

6. The permittee will be in compliance with the applicable effluent limitation if lead does not exceed the RRV of 0.3 µg/L.
7. The permittee will be in compliance with the applicable effluent limitation if nickel does not exceed the RRV of 2 µg/L.
8. The permittee will be in compliance with the applicable effluent limitation if selenium does not exceed the RRV of 1 µg/L.
9. The permittee will be in compliance with the applicable effluent limitation if zinc does not exceed the RRV of 8 µg/L.

| Effluent Limitations for Outfall 002 | | | | |
|---|---|---|---|---|
| **Parameter and Code** | **Units** | **Average Monthly Limitation (AML)** | **Maximum Daily Limitation (MDL)** | **Basis** |
| Cadmium, Total Recoverable (01113) | µg/L | 0.05 | 0.1 | Nondegradation criteria |
| Copper, Total Recoverable (01119) | µg/L | 1.9[1] | 3.8 | Nondegradation criteria |
| Lead, Total Recoverable (01114) | µg/L | 0.8 | 1.6 | Nondegradation criteria |
| Mercury, Total Recoverable (71901) | µg/L | 0.006 | 0.012 | Nondegradation criteria |
| Nitrogen, Total (as N) (00600) | mg/L | 0.08 | -- | Nondegradation criteria |
| pH (00400) | S.U. | 7 | 8.5 | B-1 Water Quality Standard |
| Phosphorus, Total (as P) (00665) | mg/L | 0.02 | -- | Nondegradation criteria |
| Selenium, Total Recoverable (00981) | µg/L | 0.61[2] | 1.23 | Nondegradation criteria |
| Total Suspended Solids (TSS) (00530) | mg/L | 0.4 | 0.9 | Nondegradation criteria |
| Zinc, Total Recoverable (01094) | µg/L | 24.0 | 48.2 | Nondegradation criteria |

1. The permittee will be in compliance with the applicable effluent limitation if copper does not exceed the RRV of 2 µg/L.
2. The permittee will be in compliance with the applicable effluent limitation if selenium does not exceed the RRV of 1 µg/L.

| Effluent Limitations for Outfall 003, 005, 006 | | | | |
|---|---|---|---|---|
| **Parameter and Code** | **Units** | **Average Monthly Limitation (AML)** | **Maximum Daily Limitation (MDL)** | **Basis** |
| Arsenic, Total Recoverable (00978) | µg/L | 2.0 | 3.9 | Nondegradation criteria |
| Cadmium, Total Recoverable (01113) | µg/L | 0.06 | 0.11 | Nondegradation criteria |
| Copper, Total Recoverable (01119) | µg/L | 2.1 | 4.3 | Nondegradation criteria |
| Lead, Total Recoverable (01114) | µg/L | 1 | 2 | Nondegradation criteria |
| Mercury, Total Recoverable (71901) | µg/L | 0.006 | 0.012 | Nondegradation criteria |
| Nitrogen, Total (as N) (00600) | mg/L | 0.27 | -- | Nondegradation criteria |
| pH (00400) | S.U. | 7 | 8.5 | B-1 Water Quality Standard |
| Phosphorus, Total (as P) (00665) | mg/L | 0.008 | -- | Nondegradation criteria |
| Selenium, Total Recoverable (00981) | µg/L | 0.61[1] | 1.23 | Nondegradation criteria |
| Total Suspended Solids (TSS) (00530) | mg/L | 1.0 | 2.0 | Nondegradation criteria |
| Zinc, Total Recoverable (01094) | µg/L | 27.6 | 55.5 | Nondegradation criteria |

1. The permittee will be in compliance with the applicable effluent limitation if selenium does not exceed the RRV of 1 µg/L.

| Effluent Limitations for Outfall 004 | | | | |
|---|---|---|---|---|
| **Parameter and Code** | **Units** | **Average Monthly Limitation (AML)** | **Maximum Daily Limitation (MDL)** | **Basis** |
| Arsenic, Total Recoverable (00978) | µg/L | 3.0 | 6.1 | Nondegradation criteria |
| Cadmium, Total Recoverable (01113) | µg/L | 0.04 | 0.08 | Nondegradation criteria |
| Copper, Total Recoverable (01119) | µg/L | 1.4[1] | 2.8 | Nondegradation criteria |
| Lead, Total Recoverable (01114) | µg/L | 0.5 | 1.0 | Nondegradation criteria |
| Mercury, Total Recoverable (71901) | µg/L | 0.006 | 0.012 | Nondegradation criteria |
| Nitrogen, Total (as N) (00600) | mg/L | 0.14 | -- | Nondegradation criteria |
| pH (00400) | S.U. | 7 | 8.5 | B-1 Water Quality Standard |
| Phosphorus, Total (as P) (00665) | mg/L | 0.012 | -- | Nondegradation criteria |
| Selenium, Total Recoverable (00981) | µg/L | 0.61[2] | 1.23 | Nondegradation criteria |
| Total Suspended Solids (TSS) (00530) | mg/L | 1.5 | 3.0 | Nondegradation criteria |
| Zinc, Total Recoverable (01094) | µg/L | 14.7 | 29.5 | Nondegradation criteria |

1. The permittee will be in compliance with the applicable effluent limitation if copper does not exceed the RRV of 2 µg/L.
2. The permittee will be in compliance with the applicable effluent limitation if selenium does not exceed the RRV of 1 µg/L.

### *2.3.3 Additional Effluent Limitations and Conditions – Not Applicable*

### *2.3.4 Narrative Prohibitions—Outfalls 001-006*

The general prohibitions of ARM 17.30.637(1) contain general provisions that apply to all state waters, including mixing zones, and typically are referred to as “free from” standards. These general prohibitions represent the minimum level of protection that applies to all state waters, including within mixing zone quality and ephemeral water and drainage ways not subject the specific standards of ARM 17.30.621 to 629 and 650 to 658.

ARM 17.30.637(1)(d) is implemented through application of numeric standards and whole effluent toxicity requirements, as discussed above. With few exceptions, facilities that are subject to the minimum treatment requirements and that are in compliance with those limitations fulfill the requirements sections 637(1) (a)-(c) and (e); however, where a discharge would cause, have the reasonable potential to cause, or contribute to an excursion of a narrative standard, effluent limitations implementing that narrative standard must be included in the permit. This permit does not include additional effluent limitations implementing the narrative standards.

## 2.4 Interim Effluent Limitations – Not Applicable

## 2.5 Compliance Schedules – Not Applicable

# 3 RATIONALE FOR MONITORING AND REPORTING REQUIREMENTS

Regulations requiring the establishment of monitoring and reporting conditions in MPDES permits are found at 40 CFR 122.44(i) and 122.48 and ARM 17.30.1351. In addition to the specific monitoring requirements presented in this section, the permit contains as standard conditions the monitoring and records requirements, and the standard reporting requirements.

Effluents must be measured and sampled prior to dilution with any receiving waters for compliance with the effluent limitations given in the discharge permit. Except for parameters measured on an instantaneous basis, all monitoring requirements, including flow, are based on daily discharge. Daily discharge, as defined in ARM 17.30.1304, means the discharge of pollutants measured during a calendar day. For pollutants with limitation expressed in terms of mass, the daily discharge is calculated as the total mass of the pollutant discharged over the day by multiplying the concentration of a sample by the daily flow. For pollutants with effluent limitations expressed in other units of measurement, the daily discharge is calculated as the average measurement of the pollutant over the day.

ARM 17.30.1351 (40 CFR 122.48) requires that monitoring requirements in MPDES permits must specify monitoring type, interval, and, frequency sufficient to yield data which are representative of the monitored activity, including, when appropriate, continuous monitoring. All effluent and ambient monitoring must be conducted in accordance with test procedures approved under 40 CFR 136, unless another method is specified in 40 CFR Subchapters N or O. Analytical methods must achieve the required reporting value (RRV) specified in Circular DEQ-7, unless otherwise specified in the permit. The permittee may use any approved analytical method capable of achieving the RRV specified in the permit. All permit effluent limitations must be expressed in terms of total recoverable metal unless the conditions of ARM 17.30.1345(5) are satisfied.

Except storm water, continuous flow monitoring and totalizing is required when permit effluent limitations are expressed in terms of mass (load) except for facilities with treatment systems having a detention time greater than 30 days. These facilities must report flow in million gallons per day (mgd) except for facilities with design flow or average daily flow of less than 0.1 mgd which should report flow in gallons per day (gpd). Any discharge or increase in volume of a discharge caused by precipitation must comply with the storm water monitoring requirements in section 3.1.1, below.

## 3.1 Monitoring Locations and Frequency

Monitoring frequencies and sample types for each monitoring location are provided in the table below. Monitoring for flow will be conducted underground near the RO treatment system with in line flow meters. Monitoring for all other parameters must be conducted at the last point of control prior to discharge into the receiving streams.

| Monitoring Requirements–Monitoring Location 001 | | | | |
|---|---|---|---|---|
| **Parameter and Code** | **Units** | **Minimum Monitoring Frequency** | **Sample Type** | **Basis** |
| Flow rate (00056) | mgd | Continuous | Recorded | ARM 17.30.1351 |
| pH, maximum (00400) | SU | Weekly | Instantaneous | Effluent Limitation |
| pH, minimum (00400) | SU | Weekly | Instantaneous | Effluent Limitation |
| Temperature (00011) | °C | Weekly | Instantaneous | Monitor |
| Ammonia, Total (as N) (00610) | mg/L | Weekly | Grab | Effluent Limitation |
| Arsenic, Total Recoverable (00978) | µg/L | Weekly | Grab | Effluent Limitation |
| Cadmium, Total Recoverable (01113) | µg/L | Weekly | Grab | Effluent Limitation |
| Chromium, Total Recoverable (01118) | µg/L | Weekly | Grab | Effluent Limitation |
| Copper, Total Recoverable (01119) | µg/L | Weekly | Grab | Effluent Limitation |
| Fluoride (00951) | µg/L | Weekly | Grab | Effluent Limitation |
| Hardness, Total (as CaCO3) (00900) | mg/L | Quarterly | Grab | Monitor |
| Lead, Total Recoverable (01114) | µg/L | Weekly | Grab | Effluent Limitation |
| Mercury, Total Recoverable (71901) | µg/L | Weekly | Grab | Effluent Limitation |
| Nickel, Total Recoverable (01074) | µg/L | Weekly | Grab | Effluent Limitation |
| Total Kjeldahl Nitrogen (00625) | mg/L | Weekly | Grab | Monitor (part of Eff. Limit) |
| Nitrite-Nitrate (as N) (00630) | mg/L | Weekly | Grab | Effluent Limitation |
| Nitrogen, Total (as N) (00600) | mg/L | Weekly | Calculate | Effluent Limitation |
| | lbs/day | -- | -- | |
| Phosphorus, Total (as P) (00665) | mg/L | Weekly | Grab | Effluent Limitation |
| | lbs/day | -- | -- | |
| Oil & Grease – Total Recoverable (00552) | mg/L | Quarterly | Grab | Monitor |
| Selenium, Total Recoverable (00981) | µg/L | Weekly | Grab | Effluent Limitation |
| Sulfate, Total (as SO4) (00945) | mg/L | Quarterly | Grab | Monitor |
| Total Suspended Solids (TSS) (00530) | mg/L | Weekly | Grab | Effluent Limitation |
| Zinc, Total Recoverable (01094) | µg/L | Weekly | Grab | Effluent Limitation |

| Monitoring Requirements–Monitoring Location 002 | | | | |
|---|---|---|---|---|
| **Parameter and Code** | **Units** | **Minimum Monitoring Frequency** | **Sample Type** | **Basis** |
| Flow rate (00056) | mgd | Continuous | Recorded | ARM 17.30.1351 |
| pH, maximum (00400) | SU | Weekly | Instantaneous | Effluent Limitation |
| pH, minimum (00400) | SU | Weekly | Instantaneous | Effluent Limitation |
| Temperature (00011) | °C | Weekly | Instantaneous | Monitor |
| Ammonia, Total (as N) (00610) | mg/L | Quarterly | Grab | Monitor |
| Arsenic, Total Recoverable (00978) | µg/L | Quarterly | Grab | Monitor |
| Cadmium, Total Recoverable (01113) | µg/L | Weekly | Grab | Effluent Limitation |
| Chromium, Total Recoverable (01118) | µg/L | Quarterly | Grab | Monitor |
| Copper, Total Recoverable (01119) | µg/L | Weekly | Grab | Effluent Limitation |
| Fluoride (00951) | µg/L | Quarterly | Grab | Monitor |
| Hardness, Total (as CaCO3) (00900) | mg/L | Quarterly | Grab | Monitor |
| Lead, Total Recoverable (01114) | µg/L | Weekly | Grab | Effluent Limitation |
| Mercury, Total Recoverable (71901) | µg/L | Weekly | Grab | Effluent Limitation |
| Nickel, Total Recoverable (01074) | µg/L | Quarterly | Grab | Monitor |
| Total Kjeldahl Nitrogen (00625) | mg/L | Weekly | Grab | Monitor (part of Eff. Limit) |
| Nitrite-Nitrate (as N) (00630) | mg/L | Weekly | Grab | Monitor (part of Eff. Limit) |
| Nitrogen, Total (as N) (00600) | mg/L | Weekly | Calculate | Effluent Limitation |
| | lbs/day | -- | -- | |
| Phosphorus, Total (as P) (00665) | mg/L | Weekly | Grab | Effluent Limitation |
| | lbs/day | -- | -- | |
| Oil & Grease – Total Recoverable (00552) | mg/L | Quarterly | Grab | Monitor |
| Selenium, Total Recoverable (00981) | µg/L | Weekly | Grab | Effluent Limitation |
| Sulfate, Total (as SO4) (00945) | mg/L | Quarterly | Grab | Monitor |
| Total Suspended Solids (TSS) (00530) | mg/L | Weekly | Grab | Effluent Limitation |
| Zinc, Total Recoverable (01094) | µg/L | Weekly | Grab | Effluent Limitation |

| Monitoring Requirements–Monitoring Location 003 | | | | |
|---|---|---|---|---|
| **Parameter and Code** | **Units** | **Minimum Monitoring Frequency** | **Sample Type** | **Basis** |
| Flow rate (00056) | mgd | Continuous | Recorded | ARM 17.30.1351 |
| pH, maximum (00400) | SU | Weekly | Instantaneous | Effluent Limitation |
| pH, minimum (00400) | SU | Weekly | Instantaneous | Effluent Limitation |
| Temperature (00011) | °C | Weekly | Instantaneous | Monitor |
| Ammonia, Total (as N) (00610) | mg/L | Quarterly | Grab | Monitor |
| Arsenic, Total Recoverable (00978) | µg/L | Weekly | Grab | Effluent Limitation |
| Cadmium, Total Recoverable (01113) | µg/L | Weekly | Grab | Effluent Limitation |
| Chromium, Total Recoverable (01118) | µg/L | Quarterly | Grab | Monitor |
| Copper, Total Recoverable (01119) | µg/L | Weekly | Grab | Effluent Limitation |
| Fluoride (00951) | µg/L | Quarterly | Grab | Monitor |
| Hardness, Total (as CaCO3) (00900) | mg/L | Quarterly | Grab | Monitor |
| Lead, Total Recoverable (01114) | µg/L | Weekly | Grab | Effluent Limitation |
| Mercury, Total Recoverable (71901) | µg/L | Weekly | Grab | Effluent Limitation |
| Nickel, Total Recoverable (01074) | µg/L | Quarterly | Grab | Monitor |
| Total Kjeldahl Nitrogen (00625) | mg/L | Weekly | Grab | Monitor (part of Eff. Limit) |
| Nitrite-Nitrate (as N) (00630) | mg/L | Weekly | Grab | Monitor (part of Eff. Limit) |
| Nitrogen, Total (as N) (00600) | mg/L | Weekly | Calculate | Effluent Limitation |
| | lbs/day | -- | -- | |
| Phosphorus, Total (as P) (00665) | mg/L | Weekly | Grab | Effluent Limitation |
| | lbs/day | -- | -- | |
| Oil & Grease – Total Recoverable (00552) | mg/L | Quarterly | Grab | Monitor |
| Selenium, Total Recoverable (00981) | µg/L | Weekly | Grab | Effluent Limitation |
| Sulfate, Total (as SO4) (00945) | mg/L | Quarterly | Grab | Monitor |
| Total Suspended Solids (TSS) (00530) | mg/L | Weekly | Grab | Effluent Limitation |
| Zinc, Total Recoverable (01094) | µg/L | Weekly | Grab | Effluent Limitation |

| Monitoring Requirements–Monitoring Location 004 | | | | |
|---|---|---|---|---|
| **Parameter and Code** | **Units** | **Minimum Monitoring Frequency** | **Sample Type** | **Basis** |
| Flow rate (00056) | mgd | Continuous | Recorded | ARM 17.30.1351 |
| pH, maximum (00400) | SU | Weekly | Instantaneous | Effluent Limitation |
| pH, minimum (00400) | SU | Weekly | Instantaneous | Effluent Limitation |
| Temperature (00011) | °C | Weekly | Instantaneous | Monitor |
| Ammonia, Total (as N) (00610) | mg/L | Quarterly | Grab | Monitor |
| Arsenic, Total Recoverable (00978) | µg/L | Weekly | Grab | Effluent Limitation |
| Cadmium, Total Recoverable (01113) | µg/L | Weekly | Grab | Effluent Limitation |
| Chromium, Total Recoverable (01118) | µg/L | Quarterly | Grab | Monitor |
| Copper, Total Recoverable (01119) | µg/L | Weekly | Grab | Effluent Limitation |
| Fluoride (00951) | µg/L | Quarterly | Grab | Monitor |
| Hardness, Total (as CaCO3) (00900) | mg/L | Quarterly | Grab | Monitor |
| Lead, Total Recoverable (01114) | µg/L | Weekly | Grab | Effluent Limitation |
| Mercury, Total Recoverable (71901) | µg/L | Weekly | Grab | Effluent Limitation |
| Nickel, Total Recoverable (01074) | µg/L | Quarterly | Grab | Monitor |
| Total Kjeldahl Nitrogen (00625) | mg/L | Weekly | Grab | Monitor (part of Eff. Limit) |
| Nitrite-Nitrate (as N) (00630) | mg/L | Weekly | Grab | Monitor (part of Eff. Limit) |
| Nitrogen, Total (as N) (00600) | mg/L | Weekly | Calculate | Effluent Limitation |
| | lbs/day | -- | -- | |
| Phosphorus, Total (as P) (00665) | mg/L | Weekly | Grab | Effluent Limitation |
| | lbs/day | -- | -- | |
| Oil & Grease – Total Recoverable (00552) | mg/L | Quarterly | Grab | Monitor |
| Selenium, Total Recoverable (00981) | µg/L | Weekly | Grab | Effluent Limitation |
| Sulfate, Total (as SO4) (00945) | mg/L | Quarterly | Grab | Monitor |
| Total Suspended Solids (TSS) (00530) | mg/L | Weekly | Grab | Effluent Limitation |
| Zinc, Total Recoverable (01094) | µg/L | Weekly | Grab | Effluent Limitation |

| Monitoring Requirements–Monitoring Location 005 | | | | |
|---|---|---|---|---|
| **Parameter and Code** | **Units** | **Minimum Monitoring Frequency** | **Sample Type** | **Basis** |
| Flow rate (00056) | mgd | Continuous | Recorded | ARM 17.30.1351 |
| pH, maximum (00400) | SU | Weekly | Instantaneous | Effluent Limitation |
| pH, minimum (00400) | SU | Weekly | Instantaneous | Effluent Limitation |
| Temperature (00011) | °C | Weekly | Instantaneous | Monitor |
| Ammonia, Total (as N) (00610) | mg/L | Quarterly | Grab | Monitor |
| Arsenic, Total Recoverable (00978) | µg/L | Weekly | Grab | Effluent Limitation |
| Cadmium, Total Recoverable (01113) | µg/L | Weekly | Grab | Effluent Limitation |
| Chromium, Total Recoverable (01118) | µg/L | Quarterly | Grab | Monitor |
| Copper, Total Recoverable (01119) | µg/L | Weekly | Grab | Effluent Limitation |
| Fluoride (00951) | µg/L | Quarterly | Grab | Monitor |
| Hardness, Total (as CaCO3) (00900) | mg/L | Quarterly | Grab | Monitor |
| Lead, Total Recoverable (01114) | µg/L | Weekly | Grab | Effluent Limitation |
| Mercury, Total Recoverable (71901) | µg/L | Weekly | Grab | Effluent Limitation |
| Nickel, Total Recoverable (01074) | µg/L | Quarterly | Grab | Monitor |
| Total Kjeldahl Nitrogen (00625) | mg/L | Weekly | Grab | Monitor (part of Eff. Limit) |
| Nitrite-Nitrate (as N) (00630) | mg/L | Weekly | Grab | Monitor (part of Eff. Limit) |
| Nitrogen, Total (as N) (00600) | mg/L | Weekly | Calculate | Effluent Limitation |
| | lbs/day | -- | -- | |
| Phosphorus, Total (as P) (00665) | mg/L | Weekly | Grab | Effluent Limitation |
| | lbs/day | -- | -- | |
| Oil & Grease – Total Recoverable (00552) | mg/L | Quarterly | Grab | Monitor |
| Selenium, Total Recoverable (00981) | µg/L | Weekly | Grab | Effluent Limitation |
| Sulfate, Total (as SO4) (00945) | mg/L | Quarterly | Grab | Monitor |
| Total Suspended Solids (TSS) (00530) | mg/L | Weekly | Grab | Effluent Limitation |
| Zinc, Total Recoverable (01094) | µg/L | Weekly | Grab | Effluent Limitation |

| Monitoring Requirements–Monitoring Location 006 | | | | |
|---|---|---|---|---|
| **Parameter and Code** | **Units** | **Minimum Monitoring Frequency** | **Sample Type** | **Basis** |
| Flow rate (00056) | mgd | Continuous | Recorded | ARM 17.30.1351 |
| pH, maximum (00400) | SU | Weekly | Instantaneous | Effluent Limitation |
| pH, minimum (00400) | SU | Weekly | Instantaneous | Effluent Limitation |
| Temperature (00011) | °C | Weekly | Instantaneous | Monitor |
| Ammonia, Total (as N) (00610) | mg/L | Quarterly | Grab | Monitor |
| Arsenic, Total Recoverable (00978) | µg/L | Weekly | Grab | Effluent Limitation |
| Cadmium, Total Recoverable (01113) | µg/L | Weekly | Grab | Effluent Limitation |
| Chromium, Total Recoverable (01118) | µg/L | Quarterly | Grab | Monitor |
| Copper, Total Recoverable (01119) | µg/L | Weekly | Grab | Effluent Limitation |
| Fluoride (00951) | µg/L | Quarterly | Grab | Monitor |
| Hardness, Total (as CaCO3) (00900) | mg/L | Quarterly | Grab | Monitor |
| Lead, Total Recoverable (01114) | µg/L | Weekly | Grab | Effluent Limitation |
| Mercury, Total Recoverable (71901) | µg/L | Weekly | Grab | Effluent Limitation |
| Nickel, Total Recoverable (01074) | µg/L | Quarterly | Grab | Monitor |
| Total Kjeldahl Nitrogen (00625) | mg/L | Weekly | Grab | Monitor (part of Eff. Limit) |
| Nitrite-Nitrate (as N) (00630) | mg/L | Weekly | Grab | Monitor (part of Eff. Limit) |
| Nitrogen, Total (as N) (00600) | mg/L | Weekly | Calculate | Effluent Limitation |
| | lbs/day | -- | -- | |
| Phosphorus, Total (as P) (00665) | mg/L | Weekly | Grab | Effluent Limitation |
| | lbs/day | -- | -- | |
| Oil & Grease – Total Recoverable (00552) | mg/L | Quarterly | Grab | Monitor |
| Selenium, Total Recoverable (00981) | µg/L | Weekly | Grab | Effluent Limitation |
| Sulfate, Total (as SO4) (00945) | mg/L | Quarterly | Grab | Monitor |
| Total Suspended Solids (TSS) (00530) | mg/L | Weekly | Grab | Effluent Limitation |
| Zinc, Total Recoverable (01094) | µg/L | Weekly | Grab | Effluent Limitation |

### *3.1.1 Storm Water Monitoring Requirements – Not Applicable*

### *3.1.2 Whole Effluent Toxicity Testing*

The Facility will perform semiannual chronic WET testing during the permit cycle using two species (*Ceriodaphnia dubia* and *Pimephales promelas*) multi-concentration definitive WET tests. A single treatment process exists for the facility, therefore it is not necessary to conduct WET testing for each outfall. In order to conduct a single WET test for the facility, the most stringent inhibition concentration will be used. Because Outfall 001 is composed entirely of effluent (i.e. no mixing with stream), there shall be no chronic toxicity in 100% effluent. Chronic toxicity occurs when, during a chronic toxicity test, the 25% inhibition concentration ($IC_{25}$) for any tested species is less than or equal to 100 percent effluent. Standard chronic toxicity language will be included in the permit.

Because the $IC_{25}$ is 100% effluent, the normal formula to calculate the dilution series cannot be used. A standard dilution series will be used (100, 50, 25, 12.5, 6.25).

WET testing requires ambient water to conduct the dilution series. Fish Creek will be used as the source of the ambient water because it has the lowest pH and hardness, which will result in the most conservative test. If Fish Creek is shown to be toxic or dry, moderately hard reconstituted laboratory water may be substituted.

### *3.1.3 Reporting Requirements*

The permittee must comply with reporting requirements as specified in ARM 17.30.1342.

# 4 RATIONALE FOR SPECIAL CONDITIONS

The following provides the rationale for the special conditions included in the permit.

## 4.1 Additional Monitoring and Special Studies

As discussed in section 2.2.5, annual ambient monitoring will be required to demonstrate that the discharges from Outfalls 001-006 are not having an adverse effect on the receiving stream channels.

### *4.1.1 Ambient Monitoring*

For Outfalls 001-006, the permittee is required to collect at a minimum, baseline conditions of stream bed composition at two locations for each receiving stream and conduct annual monitoring of stream bed composition at each monitoring location. The annual monitoring reports must be included with the renewal application and will be used to evaluate discharge volume during the permit renewal.

### *4.1.2 Supplemental Effluent Monitoring – Not Applicable*

### *4.1.3 Ground Water Monitoring – Not Applicable*

## 4.2 Best Management Practices and Pollution Prevention

The NPDES regulations at 40 CFR 122.44(k) (incorporated by reference in ARM 17.30.1344(2)(b)) state that BMPs may be included as permit conditions when authorized under section 304(e) of the CWA for the control of toxic pollutants and hazardous substances from ancillary industrial activities; authorized under section 402(p) of the CWA for the control of storm water discharges; numeric effluent limitations are infeasible; or when BMPs are necessary to achieve effluent limitations or carry out the purposes and intent of the Clean Water Act.

### *4.2.1 Land Application*

The permittee's application Form 2D includes land application of treated wastewater as an alternative to direct discharge to state waters. Pollutants which are applied to land under the control of the facility are addressed in this permit through the use of BMPs to ensure that no pollutants are discharged to state surface water.

The BMP Plan developed by the permittee must conform to EPA's *Guidance Manual for Developing Best Management Practices (BMP)*, EPA 833-B-93-004, October 1993, or equivalent.

The permit establishes the requirement that the permittee develop and implement a BMP Plan that achieves the objectives and specific requirements listed below. A copy of the plan must be submitted to DEQ within six months of the effective date of the permit. The Plan must be implemented as soon as possible but no later than nine months from the effective date of the permit. The purpose of the plan is to control runoff from land application areas.

Objectives:

The discharge from Outfall 005 meets the nondegradation water quality standards, so the normal requirements for land application of waste water do not apply. For Outfall 005, the BMP plan will document:

a. the land application procedures that ensure that runoff from the land application area does not contribute to excessive sedimentation of the stream.

b. how the permittee will prevent the soil's water holding capacity from being exceeded.

#### *4.2.2 Storm Water Management – Not Applicable*

### 4.3 Reopener Provisions

DEQ may reopen the permit to modify permit conditions and requirements. ARM 17.30.1361 addresses causes for modifying an MPDES permit based on information obtained after permit issuance. The permit also lists specific causes for which it may be reopened and modified. These reopener provisions include the following:

- new water quality standards (when requested by the permittee) (ARM 17.30.1361(2)(c));
- water quality standards or trigger values being exceeded in the receiving water (ARM 17.30.1361(2)(b));
- development and approval of a TMDL or wasteload allocation that applies to the permittee (ARM 17.30.1361(2)(b));
- a revision to the water quality management plan that calls for different effluent limitations than what are in the permit; establishment of a toxic prohibition or standard under Clean Water Act section 307(a) that is more stringent than limitations for the toxic pollutant in the permit (ARM 17.30.1361(2)(f) and (g) and 1344(2)); or
- changes in the whole effluent protocol or any other conditions related to the control of toxicants that have occurred or are needed (ARM 17.30.1361(b)).

As noted, the specific reopener provisions included in the permit are consistent with the various provisions of ARM 17.30.1361.

# 5 STANDARD CONDITIONS

Standard conditions, which apply to all MPDES permits in accordance with ARM 17.30.1342 and additional conditions applicable to specified categories of permits in accordance with ARM 17.30.1343 are included in Section III of the permit. The permittee must comply with all standard conditions under ARM 17.30.1342 and the additional conditions that are applicable to the permittee under ARM 17.30.1343.

40 CFR 123.25(a)(12) allows the state to omit or modify conditions to impose more stringent requirements. In accordance with 40 CFR 123.25, this permit omits federal conditions that address enforcement authority specified in 40 CFR 122.41(j)(5) and (k)(2) because the enforcement authority under the ARM is more stringent. In lieu of these conditions, the permit incorporates by reference 75-5-633, MCA.

# 6 NONSIGNIFICANT DETERMINATION

The MWQA states that it is unlawful to cause degradation of state waters without an authorization issued pursuant to 75-5-303, MCA [75-5-605(1)(d), MCA]. ARM 17.30.706(2) states that DEQ will determine whether a proposed activity may cause degradation for all activities which are permitted, approved licensed or otherwise authorized by DEQ, such as issuance of a discharge permit. A nondegradation analysis was conducted in Section 2.2.5 of this permit fact sheet for the proposed discharges and activities regulated by this permit. Based on this analysis DEQ has made the following determination:

**OUTFALLS 001-006**

DEQ has set the effluent limits and conditions in the current permit to comply with the criteria of ARM 17.30.715 (Criteria for Determination of Nonsignificant Changes in Water Quality), thus the proposed discharge is nonsignificant based on Montana's Nondegradation Rules and Policy (75-5-301(5) and 303, MCA). Any change in water quality resulting from these discharges is considered nonsignificant provide that the permittee is in compliance with the effluent limits and conditions of the permit.

In regards to flow, DEQ has determined these changes are nonsignificant pursuant to ARM 17.30.715(3). Any change in water quality resulting from these discharges is considered nonsignificant provided that the permittee is in compliance with the effluent limits and conditions of the permit.

# 7 OTHER INFORMATION

On September 21, 2000, a US District Judge issued an order stating that until all necessary total maximum daily loads (TMDLs) under section 303(d) of the Clean Water Act are established for a particular water quality limited segment, the state may not issue any new permits or increase permitted discharges under the MPDES program. The order was issued under the lawsuit Friends of the Wild Swan vs. US EPA, *et al.* , CV 97-35-M-DWM, District of Montana, Missoula Division.

The issuance of the permit does not conflict with the judge's order because all necessary TMDLs have been established for water quality limited segments of Fish Creek and Moose Creek.

# 8 PUBLIC PARTICIPATION

In accordance with ARM 17.30.1372, DEQ issued Public Notice No. MT-13-09 dated April 15, 2013. The public notice states that a tentative decision has been made to issue an MPDES permit for Butte Highlands JV, LLC and that a draft permit, fact sheet and environmental assessment (EA) have been prepared. A public meeting has been scheduled from 6:00 – 8:00 pm on May 20, 2013, at the Butte-Silver Bow Public Archive located at 17 W. Quartz in Butte. Public comments are invited any time prior to the close of the business on May 30, 2013. Comments will be accepted at the public meeting or may be directed to:

DEQ Permitting and Compliance Division
Water Protection Bureau
PO Box 200901
Helena, MT 59620

or WPBPublicNotices@mt.gov

All comments received or postmarked prior to the close of the public comment period will be considered in the formulation of the final permit. DEQ will respond to all substantive comments and issue a final decision within sixty days of the close of the public comment period or as soon as possible thereafter.

All persons, including the applicant, who believe any condition of a draft permit is inappropriate or that DEQ's tentative decision to deny an application, terminate a permit, or prepare a draft permit is inappropriate, shall raise all reasonably ascertainable issues and submit all reasonably available arguments supporting their position by the close of the public comment period (including any public hearing) under ARM 17.30.1372.

## 8.1 Notification of Interested Parties

Copies of the public notice were mailed to the discharger, state and federal agencies and interested persons who have expressed an interest in being notified of permit actions. A copy of the distribution list is available in the administrative record for this permit. In addition to mailing the public notice, a copy of the notice and applicable draft permit, fact sheet and EA were posted on DEQ's website for 30 days.

Any person interested in being placed on the mailing list for information regarding this MPDES permit should contact DEQ, reference this facility, and provide a name, address, and phone number.

## 8.2 Public Hearing Written Comments

During the public comment period provided by the notice, DEQ will accept requests for a public hearing. A request for a public hearing must be in writing and must state the nature of the issue proposed to be raised in the hearing (ARM 17.30.1373).

## 8.3 Permit Appeal

After the close of the public comment period DEQ will issue a final permit decision. A final permit decision means a final decision to issue, deny, modify, revoke and reissue, or, terminate a permit. A permit decision is effective 30 days after the date of issuance unless a later date is specified in the

decision, a stay is granted pursuant to ARM 17.30.1379, or the applicant files an appeal pursuant to 75-5-403, MCA.

The Applicant may file an appeal within 30 days of DEQ's action to the following address:

Secretary, Board of Environmental Review
Department of Environmental Quality
1520 East Sixth Avenue
PO Box 200901
Helena, Montana 59620-0901

## 8.4 Additional Information

Requests for additional information or questions regarding this permit should be directed to: Chris Hill at (406) 444-6740 or by email at chill@mt.gov.

# MASTER LIST OF APPENDICES

| Appendix and Table Number | Description | Applicability | Status |
|---|---|---|---|
| **1. Water Quality Standards and Nondegradation Criteria** | | | |
| 1.A | Applicable Water Quality Stds. and Nondegradation Criteria | Basin Creek | Required |
| 1.B | Applicable Water Quality Stds. and Nondegradation Criteria | Tributary to Fish Creek | Required |
| 1.C | Applicable Water Quality Stds. and Nondegradation Criteria | Middle Fork of Moose Creek | Required |
| 1.D | Applicable Water Quality Stds. and Nondegradation Criteria | Tributary to Middle Fork of Moose Creek | Required |
| **2. Receiving Water Characteristics** | | | |
| 2.A.1 | Receiving Water Characteristics—Conventional and Nonconventional Pollutants and Parameters | Basin Creek | Required |
| 2.A.2 | Receiving Water Characteristics—Toxic Priority Pollutants | Basin Creek | Required based on pollutants of concern |
| 2.B.1 | Receiving Water Characteristics—Conventional and Nonconventional Pollutants and Parameters | Tributary to Fish Creek | Required |
| 2.B.2 | Receiving Water Characteristics—Toxic Priority Pollutants | Tributary to Fish Creek | Required based on pollutants of concern |
| 2.C.1 | Receiving Water Characteristics—Conventional and Nonconventional Pollutants and Parameters | Middle Fork of Moose Creek | Required |
| 2.C.2 | Receiving Water Characteristics—Toxic Priority Pollutants | Middle Fork of Moose Creek | Required based on pollutants of concern |
| 2.D.1 | Receiving Water Characteristics—Conventional and Nonconventional Pollutants and Parameters | Tributary to Middle Fork of Moose Creek | Required |
| 2.D.2 | Receiving Water Characteristics—Toxic Priority Pollutants | Tributary to Middle Fork of Moose Creek | Required based on pollutants of concern |
| **3. Effluent Characteristics** | | | |
| 3.A.1 | Effluent Characteristics—Conventional and Nonconventional Pollutants and Parameters | Outfalls 001 to 006 | Required |
| 3.A.2 | Effluent Characteristics—Toxic Priority Pollutants | Outfalls 001 to 006 | Required based on pollutants of concern |

| Appendix and Table Number | Description | Applicability | Status |
|---|---|---|---|
| **4. Reasonable Potential Analysis—Individual Parameters** | | | |
| 4.A | Reasonable Potential Analysis— New or Increasing Sources Under Nondegradation Rules | Outfall 001 Discharging to Basin Creek | Required if there are any new or increasing sources |
| 4.B | Reasonable Potential Analysis— New or Increasing Sources Under Nondegradation Rules | Outfall 002 Discharging to a Tributary to Fish Creek | Required if there are any new or increasing sources |
| 4.C | Reasonable Potential Analysis— New or Increasing Sources Under Nondegradation Rules | Outfall 003, 005, 006 Discharging to Middle Fork of Moose Creek | Required if there are any new or increasing sources |
| 4.D | Reasonable Potential Analysis— New or Increasing Sources Under Nondegradation Rules | Outfall 004 Discharging to a Tributary to Middle Fork of Moose Creek | Required if there are any new or increasing sources |
| **5. WQBELs—Individual Parameters** | | | |
| 5.A | WQBELs—New or Increasing Sources Under Nondegradation Rules | Outfall 001 Discharging to Basin Creek | Required |
| 5.B | WQBELs—New or Increasing Sources Under Nondegradation Rules | Outfall 002 Discharging to a Tributary to Fish Creek | Required |
| 5.C | WQBELs—New or Increasing Sources Under Nondegradation Rules | Outfall 003, 005, 006 Discharging to Middle Fork of Moose Creek | Required |
| 5.D | WQBELs—New or Increasing Sources Under Nondegradation Rules | Outfall 004 Discharging to a Tributary to Middle Fork of Moose Creek | Required |

# APPENDIX 1—WATER QUALITY STANDARDS AND NONDEGRADATION CRITERIA

## Table 1.A Numeric Water Quality Standards—Basin Creek

| Parameter | Units | Acute Water Quality Standard ( $S_a$) | Chronic Water Quality Standard ( $S_c$) | Human Health Water Quality Standard ($S_{hh}$) | Nondegradation Category | Nondegradation Criterion or Not Applicable ($S_{ND}$ or NA) |
|---|---|---|---|---|---|---|
| **Conventional and Nonconventional Pollutants** | | | | | | |
| Biochemical Oxygen Demand | mg/L | -- | -- | -- | Narrative | NA |
| Chemical Oxygen Demand | mg/L | -- | -- | -- | Narrative | NA |
| Total Organic Carbon | mg/L | -- | -- | -- | Narrative | NA |
| Total Suspended Solids | mg/L | -- | -- | -- | Harmful | 3.7[1] |
| Ammonia | mg/L | 3.8 | 1.8 | -- | Toxic | 0.013[1,2] |
| Flow | MGD or gpd | -- | | | Flow | NA |
| Temperature, maximum | °C | No increase above naturally occurring water temperature[3] | | | Harmful | NA |
| Temperature, minimum | °C | 0 (32 °F) | | | Harmful | NA |
| pH | SU | No change from natural pH[3] | | | Harmful | 7.6 – 8.3 |
| Chlorine, Total Residual | mg/L | 0.019 | 0.011 | 4.000 | Toxic | 0.0017 |
| Fecal Coliform | #/100 ml | -- | | | -- | NA |
| *E. coli* bacteria, summer | #/100 ml | 32/64[3] | | | Harmful | NA |
| *E. coli* bacteria, winter | #/100 ml | 32/64[3] | | | Harmful | NA |
| Nitrite + Nitrate (as N) | mg/L | -- | -- | 10 | Toxic | 0.14[1] |
| Total Nitrogen | mg/L | -- | -- | -- | Nutrient | 0.18[1,2] |
| Oil & Grease | mg/L | -- | -- | 10 | Narrative | 1[1,2] |
| Total Phosphorus | mg/L | -- | -- | -- | Nutrient | 0.012 |
| Dissolved Oxygen | mg/L | See ARM 17.30.621(3)(b) | | | Toxic | NA |
| Turbidity | NTU | -- | | -- | Harmful | 2.1[1] |
| Total Dissolved Solids | mg/L | -- | -- | -- | Narrative | NA |
| Hardness, Total, as CaCO3 | mg/L | -- | -- | -- | Narrative | NA |
| Flouride | µg/L | -- | -- | 4000 | Toxic | 80[1,2] |

1. The A-closed water quality standard (no increase above naturally occurring conditions) is applied as the nondegradation criterion. DEQ has used the 25th percentile of the ambient data.
2. This value is based on non-quantified data.
3. The A-closed water quality standard.

## Table 1.A Numeric Water Quality Standards—Basin Creek

| Parameter | Units | Acute Water Quality Standard ( $S_a$) | Chronic Water Quality Standard ( $S_c$) | Human Health Water Quality Standard ($S_{hh}$) | Nondegradation Category | Nondegradation Criterion or Not Applicable ($S_{ND}$ or NA) |
|---|---|---|---|---|---|---|
| **Metals, Cyanide, Total Phenol, and Dioxin** | | | | | | |
| Antimony, Total | µg/L | -- | -- | 5.6 | Toxic | 0.16[1,2] |
| Arsenic, Total | µg/L | 340 | 150 | 10 | Carcinogen | 7.2[1] |
| Beryllium, Total | µg/L | -- | -- | 4 | Carcinogen | 0.022[1,2] |
| Cadmium, Total | µg/L | 4.01 | 0.43 | 5 | Toxic | 0.028[1,2] |
| Chromium, Total | µg/L | -- | -- | 100 | Toxic | 0.36[1,2] |
| Copper, Total | µg/L | 25.12 | 15.85 | 1300 | Toxic | 1.3[1] |
| Lead, Total | µg/L | 179.9 | 7.01 | 15 | Toxic | 0.15[1] |
| Mercury, Total | µg/L | 1.7 | 0.91 | 0.05 | Toxic w/BCF > 300 | 0.0075[3] |
| Nickel, Total | µg/L | 793.1 | 88.2 | 100 | Toxic | 0.16[1,2] |
| Selenium, Total | µg/L | 20 | 5 | 50 | Toxic | 0.21[1,2] |
| Silver, Total | µg/L | 11.8 | -- | 100 | Toxic | 0.07[1,2] |
| Thallium, Total | µg/L | -- | -- | 0.24 | Toxic | 0.094[1,2] |
| Zinc, Total | µg/L | 202.7 | 202.7 | 2000 | Toxic | 2.5[1,2] |
| Cyanide | µg/L | 22 | 5.2 | 140 | Toxic | 0.78[4] |
| Phenol, Total | µg/L | -- | -- | 300 | Harmful | 120[4] |
| Dioxin (2,3,7,8-TCDD) | µg/L | -- | -- | $5 \times 10^{-8}$ | Carcinogen | NA[4] |
| **Other Toxic Priority Pollutants** | | | | | | |
| Barium | µg/L | -- | -- | 1000 | Toxic | 15[1] |
| Strontium | µg/L | -- | -- | 4000 | Toxic | 80[1] |

1. The A-closed water quality standard (no increase above naturally occurring conditions) is applied as the nondegradation criterion. DEQ has used the 25th percentile of the ambient data.
2. This value is based on non-quantified data.
3. Ambient data was not collected at the RRV, therefore the 25th percentile of the ambient data cannot be determined. The nondegradation criterion will be set at 15% of the lowest applicable standard.
4. This parameter is not present in the effluent, therefore ambient data was not collected.

## Table 1.B Numeric Water Quality Standards—Tributary to Fish Creek

| Parameter | Units | Acute Water Quality Standard ( $S_a$) | Chronic Water Quality Standard ( $S_c$) | Human Health Water Quality Standard ($S_{hh}$) | Nondegradation Category | Nondegradation Criterion or Not Applicable ($S_{ND}$ or NA) |
|---|---|---|---|---|---|---|
| **Conventional and Nonconventional Pollutants** | | | | | | |
| Biochemical Oxygen Demand | mg/L | -- | -- | -- | Narrative | NA |
| Chemical Oxygen Demand | mg/L | -- | -- | -- | Narrative | NA |
| Total Organic Carbon | mg/L | -- | -- | -- | Narrative | NA |
| Total Suspended Solids | mg/L | -- | -- | -- | Harmful | 0.52[1,2] |
| Ammonia | mg/L | 11.4 | 4.0 | -- | Toxic | 0.6 |
| Flow | MGD or gpd | -- | | | Flow | NA |
| Temperature, maximum | °C | 19.4 (67 °F) | | | Harmful | NA |
| Temperature, minimum | °C | 0 (32 °F) | | | Harmful | NA |
| pH, maximum | SU | 8.5 | | | Harmful | NA |
| pH, minimum | SU | 7 | | | Harmful | NA |
| Chlorine, Total Residual | mg/L | 0.019 | 0.011 | 4.000 | Toxic | 0.0017 |
| Fecal Coliform | #/100 ml | -- | | | -- | NA |
| *E. coli* bacteria, summer | #/100 ml | 126/252 | | | Harmful | NA |
| *E. coli* bacteria, winter | #/100 ml | 630/1,260 | | | Harmful | NA |
| Nitrite + Nitrate (as N) | mg/L | -- | -- | 10 | Toxic | 1.5 |
| Total Nitrogen | mg/L | -- | -- | -- | Nutrient | 0.08[1,2] |
| Oil & Grease | mg/L | -- | -- | 10 | Narrative | 1.5 |
| Total Phosphorus | mg/L | -- | -- | -- | Nutrient | 0.02 |
| Dissolved Oxygen | mg/L | See ARM 17.30.623(2)(b) | | | Toxic | NA |
| Turbidity | NTU | 5 | 5 | -- | Harmful | 2 |
| Total Dissolved Solids | mg/L | -- | -- | -- | Narrative | NA |
| Hardness, Total, as CaCO3 | mg/L | -- | -- | -- | Narrative | NA |
| Flouride | µg/L | -- | -- | 4000 | Toxic | 600 |

1. DEQ has used the 25th percentile of the ambient data.
2. This value is based on non-quantified data.

## Table 1.B Numeric Water Quality Standards—Tributary to Fish Creek

| Parameter | Units | Acute Water Quality Standard ( $S_a$) | Chronic Water Quality Standard ( $S_c$) | Human Health Water Quality Standard ($S_{hh}$) | Nondegradation Category | Nondegradation Criterion or Not Applicable ($S_{ND}$ or NA) |
|---|---|---|---|---|---|---|
| **Metals, Cyanide, Total Phenol, and Dioxin** | | | | | | |
| Antimony, Total | µg/L | -- | -- | 5.6 | Toxic | 0.84 |
| Arsenic, Total | µg/L | 340 | 150 | 10 | Carcinogen | 10[1] |
| Beryllium, Total | µg/L | -- | -- | 4 | Carcinogen | 0.058[1,2] |
| Cadmium, Total | µg/L | 3.86 | 0.42 | 5 | Toxic | 0.06 |
| Chromium, Total | µg/L | -- | -- | 100 | Toxic | 15 |
| Copper, Total | µg/L | 24.23 | 15.34 | 1300 | Toxic | 2.3 |
| Lead, Total | µg/L | 171.3 | 6.68 | 15 | Toxic | 1 |
| Mercury, Total | µg/L | 1.7 | 0.91 | 0.05 | Toxic w/BCF > 300 | 0.0075[3] |
| Nickel, Total | µg/L | 767.8 | 85.4 | 100 | Toxic | 12.81 |
| Selenium, Total | µg/L | 20 | 5 | 50 | Toxic | 0.75 |
| Silver, Total | µg/L | 11.05 | -- | 100 | Toxic | 1.7 |
| Thallium, Total | µg/L | -- | -- | 0.24 | Toxic | 0.04 |
| Zinc, Total | µg/L | 196.2 | 196.2 | 2000 | Toxic | 29.4 |
| Cyanide | µg/L | 22 | 5.2 | 140 | Toxic | 0.78 |
| Phenol, Total | µg/L | -- | -- | 300 | Harmful | 120 |
| Dioxin (2,3,7,8-TCDD) | µg/L | -- | -- | $5 \times 10^{-8}$ | Carcinogen | NA[4] |
| **Other Toxic Priority Pollutants** | | | | | | |
| Barium | µg/L | -- | -- | 1000 | Toxic | 150 |
| Strontium | µg/L | -- | -- | 4000 | Toxic | 600 |

1. DEQ has used the 25th percentile of the ambient data.
2. This value is based on non-quantified data.
3. Ambient data was not collected at the RRV, therefore the 25th percentile of the ambient data cannot be determined. The nondegradation criterion will be set at 15% of the lowest applicable standard.
4. This parameter is not present in the effluent, therefore ambient data was not collected.

## Table 1.C Numeric Water Quality Standards—Middle Fork of Moose Creek

| Parameter | Units | Acute Water Quality Standard ( $S_a$) | Chronic Water Quality Standard ( $S_c$) | Human Health Water Quality Standard ($S_{hh}$) | Nondegradation Category | Nondegradation Criterion or Not Applicable ($S_{ND}$ or NA) |
|---|---|---|---|---|---|---|
| **Conventional and Nonconventional Pollutants** | | | | | | |
| Biochemical Oxygen Demand | mg/L | -- | -- | -- | Narrative | NA |
| Chemical Oxygen Demand | mg/L | -- | -- | -- | Narrative | NA |
| Total Organic Carbon | mg/L | -- | -- | -- | Narrative | NA |
| Total Suspended Solids | mg/L | -- | -- | -- | Harmful | 1.2[1,2] |
| Ammonia | mg/L | 6.8 | 2.8 | -- | Toxic | 0.42 |
| Flow | MGD or gpd | -- | | | Flow | NA |
| Temperature, maximum | °C | 19.4 (67 °F) | | | Harmful | NA |
| Temperature, minimum | °C | 0 (32 °F) | | | Harmful | NA |
| pH, maximum | SU | 8.5 | | | Harmful | NA |
| pH, minimum | SU | 7 | | | Harmful | NA |
| Chlorine, Total Residual | mg/L | 0.019 | 0.011 | 4.000 | Toxic | 0.0017 |
| Fecal Coliform | #/100 ml | -- | | | -- | NA |
| *E. coli* bacteria, summer | #/100 ml | 126/252 | | | Harmful | NA |
| *E. coli* bacteria, winter | #/100 ml | 630/1,260 | | | Harmful | NA |
| Nitrite + Nitrate (as N) | mg/L | -- | -- | 10 | Toxic | 1.5 |
| Total Nitrogen | mg/L | -- | -- | -- | Nutrient | 0.27[1,2] |
| Oil & Grease | mg/L | -- | -- | 10 | Narrative | 1.5 |
| Total Phosphorus | mg/L | -- | -- | -- | Nutrient | 0.008[1,2] |
| Dissolved Oxygen | mg/L | See ARM 17.30.623(2)(b) | | | Toxic | NA |
| Turbidity | NTU | 5 | 5 | -- | Harmful | 2 |
| Total Dissolved Solids | mg/L | -- | -- | -- | Narrative | NA |
| Hardness, Total, as CaCO3 | mg/L | -- | -- | -- | Narrative | NA |
| Flouride | µg/L | -- | -- | 4000 | Toxic | 600 |

1. DEQ has used the 25th percentile of the ambient data.
2. This value is based on non-quantified data.

## Table 1.C Numeric Water Quality Standards—Middle Fork of Moose Creek

| Parameter | Units | Acute Water Quality Standard ( $S_a$) | Chronic Water Quality Standard ( $S_c$) | Human Health Water Quality Standard ($S_{hh}$) | Nondegradation Category | Nondegradation Criterion or Not Applicable ($S_{ND}$ or NA) |
|---|---|---|---|---|---|---|
| **Metals, Cyanide, Total Phenol, and Dioxin** | | | | | | |
| Antimony, Total | µg/L | -- | -- | 5.6 | Toxic | 0.84 |
| Arsenic, Total | µg/L | 340 | 150 | 10 | Carcinogen | 2.4[1] |
| Beryllium, Total | µg/L | -- | -- | 4 | Carcinogen | 0.069[1,2] |
| Cadmium, Total | µg/L | 4.56 | 0.47 | 5 | Toxic | 0.07 |
| Chromium, Total | µg/L | -- | -- | 100 | Toxic | 15 |
| Copper, Total | µg/L | 28.29 | 17.66 | 1300 | Toxic | 2.6 |
| Lead, Total | µg/L | 211.2 | 8.23 | 15 | Toxic | 1.23 |
| Mercury, Total | µg/L | 1.7 | 0.91 | 0.05 | Toxic w/BCF > 300 | 0.0075[3] |
| Nickel, Total | µg/L | 882.4 | 98.1 | 100 | Toxic | 14.7 |
| Selenium, Total | µg/L | 20 | 5 | 50 | Toxic | 0.75 |
| Silver, Total | µg/L | 14.66 | -- | 100 | Toxic | 2.19 |
| Thallium, Total | µg/L | -- | -- | 0.24 | Toxic | 0.04 |
| Zinc, Total | µg/L | 225.6 | 225.6 | 2000 | Toxic | 33.8 |
| Cyanide | µg/L | 22 | 5.2 | 140 | Toxic | 0.78 |
| Phenol, Total | µg/L | -- | -- | 300 | Harmful | 120 |
| Dioxin (2,3,7,8-TCDD) | µg/L | -- | -- | $5 \times 10^{-8}$ | Carcinogen | NA[4] |
| **Other Toxic Priority Pollutants** | | | | | | |
| Barium | µg/L | -- | -- | 1000 | Toxic | 150 |
| Strontium | µg/L | -- | -- | 4000 | Toxic | 600 |

1. DEQ has used the 25th percentile of the ambient data.
2. This value is based on non-quantified data.
3. Ambient data was not collected at the RRV, therefore the 25th percentile of the ambient data cannot be determined. The nondegradation criterion will be set at 15% of the lowest applicable standard.
4. This parameter is not present in the effluent, therefore ambient data was not collected.

## Table 1.D Numeric Water Quality Standards—Tributary to Middle Fork of Moose Creek

| Parameter | Units | Acute Water Quality Standard ( $S_a$) | Chronic Water Quality Standard ( $S_c$) | Human Health Water Quality Standard ($S_{hh}$) | Nondegradation Category | Nondegradation Criterion or Not Applicable ($S_{ND}$ or NA) |
|---|---|---|---|---|---|---|
| **Conventional and Nonconventional Pollutants** | | | | | | |
| Biochemical Oxygen Demand | mg/L | -- | -- | -- | Narrative | NA |
| Chemical Oxygen Demand | mg/L | -- | -- | -- | Narrative | NA |
| Total Organic Carbon | mg/L | -- | -- | -- | Narrative | NA |
| Total Suspended Solids | mg/L | -- | -- | -- | Harmful | 1.8[1,2] |
| Ammonia | mg/L | 8.1 | 3.2 | -- | Toxic | 0.48 |
| Flow | MGD or gpd | -- | | | Flow | NA |
| Temperature, maximum | °C | 19.4 (67 °F) | | | Harmful | NA |
| Temperature, minimum | °C | 0 (32 °F) | | | Harmful | NA |
| pH, maximum | SU | 8.5 | | | Harmful | NA |
| pH, minimum | SU | 7 | | | Harmful | NA |
| Chlorine, Total Residual | mg/L | 0.019 | 0.011 | 4.000 | Toxic | 0.0017 |
| Fecal Coliform | #/100 ml | -- | | | -- | NA |
| *E. coli* bacteria, summer | #/100 ml | 126/252 | | | Harmful | NA |
| *E. coli* bacteria, winter | #/100 ml | 630/1,260 | | | Harmful | NA |
| Nitrite + Nitrate (as N) | mg/L | -- | -- | 10 | Toxic | 1.5 |
| Total Nitrogen | mg/L | -- | -- | -- | Nutrient | 0.14[1] |
| Oil & Grease | mg/L | -- | -- | 10 | Narrative | 1.5 |
| Total Phosphorus | mg/L | -- | -- | -- | Nutrient | 0.012[1] |
| Dissolved Oxygen | mg/L | See ARM 17.30.623(2)(b) | | | Toxic | NA |
| Turbidity | NTU | 5 | 5 | -- | Harmful | 2 |
| Total Dissolved Solids | mg/L | -- | -- | -- | Narrative | NA |
| Hardness, Total, as CaCO3 | mg/L | -- | -- | -- | Narrative | NA |
| Flouride | µg/L | -- | -- | 4000 | Toxic | 600 |

1. DEQ has used the 25th percentile of the ambient data.
2. This value is based on non-quantified data.

## Table 1.D Numeric Water Quality Standards—Tributary to Middle Fork of Moose Creek

| Parameter | Units | Acute Water Quality Standard ( $S_a$) | Chronic Water Quality Standard ( $S_c$) | Human Health Water Quality Standard ($S_{hh}$) | Nondegradation Category | Nondegradation Criterion or Not Applicable ($S_{ND}$ or NA) |
|---|---|---|---|---|---|---|
| **Metals, Cyanide, Total Phenol, and Dioxin** | | | | | | |
| Antimony, Total | µg/L | -- | -- | 5.6 | Toxic | 0.84 |
| Arsenic, Total | µg/L | 340 | 150 | 10 | Carcinogen | 3.7[1] |
| Beryllium, Total | µg/L | -- | -- | 4 | Carcinogen | 0.092[1,2] |
| Cadmium, Total | µg/L | 2.67 | 0.32 | 5 | Toxic | 0.05 |
| Chromium, Total | µg/L | -- | -- | 100 | Toxic | 15 |
| Copper, Total | µg/L | 17.21 | 11.25 | 1300 | Toxic | 1.7 |
| Lead, Total | µg/L | 107.9 | 4.21 | 15 | Toxic | 0.6 |
| Mercury, Total | µg/L | 1.7 | 0.91 | 0.05 | Toxic w/BCF > 300 | 0.0075[3] |
| Nickel, Total | µg/L | 564.7 | 62.8 | 100 | Toxic | 9.42 |
| Selenium, Total | µg/L | 20 | 5 | 50 | Toxic | 0.75 |
| Silver, Total | µg/L | 5.92 | -- | 100 | Toxic | 0.9 |
| Thallium, Total | µg/L | -- | -- | 0.24 | Toxic | 0.04 |
| Zinc, Total | µg/L | 144.3 | 144.3 | 2000 | Toxic | 21.6 |
| Cyanide | µg/L | 22 | 5.2 | 140 | Toxic | 0.78 |
| Phenol, Total | µg/L | -- | -- | 300 | Harmful | 120 |
| Dioxin (2,3,7,8-TCDD) | µg/L | -- | -- | $5 \times 10^{-8}$ | Carcinogen | NA[4] |
| **Other Toxic Priority Pollutants** | | | | | | |
| Barium | µg/L | -- | -- | 1000 | Toxic | 150 |
| Strontium | µg/L | -- | -- | 4000 | Toxic | 600 |

1. DEQ has used the 25th percentile of the ambient data.
2. This value is based on non-quantified data.
3. Ambient data was not collected at the RRV, therefore the 25th percentile of the ambient data cannot be determined. The nondegradation criterion will be set at 15% of the lowest applicable standard.
4. This parameter is not present in the effluent, therefore ambient data was not collected.

## APPENDIX 2—RECEIVING WATER CHARACTERISTICS

Where receiving water quality data is available it may be used in the development of water quality based effluent limitations (WQBEL) for the parameters of concern (POC). For new or increased sources subject to nondegradation review, existing water quality, as defined in ARM 17.30.702, is necessary for all POC present in the discharge. Criteria for establishing POC is discussed in Section 2.2.4 of this permit fact sheet. This Appendix describes the process used to determine the receiving water concentration or value for purposes of developing WQBELs.

Receiving water quality should be based on samples collected during the period of critical stream flow ($Q_s$), as described in Section 2.2.7. Because $Q_s$ is an infrequent event and data is not typically available, the background concentration ($C_s$) must be estimated based on water quality data that is collected outside of this flow condition. To account for the uncertainties in estimating background data, DEQ uses the upper and lower quartiles of the sample data. The upper quartile is defined as the 75$^{th}$ percentile of the measured or observed data and the lower quartile is the 25$^{th}$ percentile of the same data set. A minimum of 10 data points or measurements must be available and representative of the range of hydrologic conditions in the receiving water. Data used in this analysis must be collected upstream of the point of discharge for flowing water bodies or outside of the influent of the discharge for non-flowing water bodies.

For most constituents, the critical background concentration is defined to be the upper quartile of the sample data for purposes of a reasonable potential analysis and determining assimilative capacity. In some cases, including application of the nondegradation criteria in ARM 17.30.715(1), changes in existing water quality or the water quality standard is expressed relative to the background concentration in the receiving water. In these situations the WQBEL is based on the lower bound estimate of the interquartile range (25$^{th}$ percentile value) to maintain the existing water quality of the receiving water. Additional details on developing WQBELs based on these estimates are given in Appendix 5.

All ambient water quality data was collected by the permittee in anticipation of satisfying the nondegradation criteria. The data for Outfall 001 (Basin Creek) was collected between September 28, 2009, and September 28, 2012, but the reclamation process at the headwaters of Basin Creek was completed in August 2010. The data used for the permit is from August 24, 2010, through September 28, 2012. The data was collected at sampling site WS-7 (45° 47’ 52.43” N latitude, 112° 31’ 6.38” W longitude). The data for Outfall 002 (Tributary to Fish Creek) was collected between November 25, 2008, and October 20, 2011. The data was collected at sampling site WS-4 (45° 47’ 24.04” N latitude, 112° 29’ 45.32” W longitude). The data for Outfall 003, 005, 006 (Middle Fork of Moose Creek) was collected between November 26, 2008, and September 28, 2012. The data was collected at sampling site WS-6 (45° 47’ 7.15” N latitude, 112° 31’ 48.25” W longitude). The data for Outfall 004 (tributary to the Middle Fork of Moose Creek) was collected between December 12, 2011, and October 24, 2012. The data was collected at sampling site WS-9 (45° 46’ 57.06” N latitude, 112° 31’ 42.05” W longitude). Receiving water data is described in Tables 2.A thru 2.D.

### Critical Background Receiving Water Pollutant Concentration ($C_s$)

For the purposes of the Reasonable Potential Analysis (RPA) in Appendix 4 and development of the Waste Load Allocation and the Water Quality Based Effluent Limitations in Appendix 5, the final critical background receiving water pollutant concentration ($C_s$) is determined as follows:

1. Reject data which has not achieved the applicable RRV, ML, or other QA/QC objectives
2. Determine whether there are 10 or more data points available
3. Determine the 25th percentile value ($C_{.25}$) of the data set (if > 10 data points)
4. Determine the 75th percentile value ($C_{.75}$) of the data set (if > 10 data points)

Where there are less than 10 data points available, $C_s$ is undetermined and reported as ("U"). In this case, RPA and WLA/WQBEL are based on meeting the applicable water quality standard or nondegradation criteria at the end of pipe (no receiving water dilution).

Where there are 10 or more data points, pollutants with a numeric water quality standard or non-significance criterion expressed as an *absolute value* (e.g. numeric criterion or standard):

1. If $C_{.75}$ is a quantified value (i.e. not reported as less than detect), the background concentration ($C_s$) is estimated by $C_{.75}$
2. If $C_{.75}$ is a non-quantified value (i.e. reported as less than detect), and if the water quality standard < RRV, DEQ will set $C_s$ = WQS (no assimilative capacity).
3. If $C_{.75}$ is a non-quantified value and if RRV < water quality standard, DEQ will set $C_s$ = detection limit.

For pollutants with a water quality standard or non-significance criterion expressed as a *relative value* (e.g. increase above background) based on background concentration and where ≥10 data points are available:

1. If $C_{.25}$ is a quantified value, then $C_s = C_{.25}$
2. If $C_{.25}$ is a non-quantified value, then $C_s$ = RRV or the detection limit (whichever is lower).

## Table 2.A.1 Receiving Water Characteristics—Basin Creek

| Parameter | Units | Required Reporting Value (RRV) | Lower Quartile ($C_{25}$) | Upper Quartile ($C_{75}$) | Number of Samples | Comment or Not Applicable (NA) |
|---|---|---|---|---|---|---|
| Biochemical Oxygen Demand | mg/L | -- | -- | -- | -- | |
| Chemical Oxygen Demand | mg/L | -- | -- | -- | -- | |
| Total Organic Carbon | mg/L | -- | -- | -- | -- | |
| Total Suspended Solids | mg/L | -- | 3.7 | 9.1 | 26 | |
| Ammonia | mg/L | 0.07 | 0.013[1] | 0.02[1] | 26 | |
| Flow | MGD or gpd | | | | | |
| Temperature | °C | -- | 3.5 | 6.9 | 25 | |
| pH | SU | -- | 8 | 8.1 | 25 | |
| Chlorine, Total Residual | mg/L | 0.1 | -- | -- | -- | |
| Fecal Coliform | #/100 ml | -- | -- | -- | -- | |
| *E. coli* bacteria, summer | #/100 ml | -- | -- | -- | -- | |
| *E. coli* bacteria, winter | #/100 ml | -- | -- | -- | -- | |
| Nitrite + Nitrate (as N) | mg/L | 0.02 | 0.14 | 0.19 | 26 | |
| Total Kjeldahl Nitrogen | mg/L | -- | 0.04[1] | 0.1[1] | 26 | |
| Total Nitrogen | mg/L | -- | 0.18[1] | 0.29[1] | 26 | |
| Oil & Grease | mg/L | -- | 1[1] | 1.6[1] | 26 | |
| Total Phosphorus | mg/L | -- | 0.012 | 0.018 | 26 | |
| Dissolved Oxygen | mg/L | 0.3 | -- | -- | -- | |
| Turbidity | NTU | -- | 2.1 | 3.3 | 25 | |
| Total Dissolved Solids | mg/L | -- | 187 | 200 | 26 | |
| Hardness, Total, as CaCO3 | mg/L | -- | 186 | 201 | 26 | |
| Fluoride | µg/L | 200 | 80[1] | 118[1] | 26 | |
| Sulfate | mg/L | -- | 13.3 | 14.4 | 26 | |

1. This value is based on non-quantified data.

## Table 2.A.2 Receiving Water Characteristics—Basin Creek

| Parameter | Units | Required Reporting Value (RRV) | Lower Quartile ($C_{25}$) | Upper Quartile ($C_{75}$) | Number of Samples | Comment or Not Applicable (NA) |
|---|---|---|---|---|---|---|
| **Metals, Cyanide, Total Phenol, and Dioxin** | | | | | | |
| Antimony, Total | µg/L | 0.5 | 0.16[1] | 0.24[1] | 26 | |
| Arsenic, Total | µg/L | 1 | 7.2 | 8.4 | 26 | |
| Beryllium, Total | µg/L | 0.8 | 0.022[1] | 0.092[1] | 26 | |
| Cadmium, Total | µg/L | 0.03 | 0.028[1] | 0.03[1] | 26 | |
| Chromium, Total | µg/L | 10 | 0.36[1] | 0.58 | 26 | |
| Copper, Total | µg/L | 2 | 1.3 | 2.2 | 26 | |
| Lead, Total | µg/L | 0.3 | 0.15 | 0.28 | 26 | |
| Mercury, Total | µg/L | 0.005 | U[2] | U[2] | 26 | |
| Nickel, Total | µg/L | 2 | 0.16[1] | 0.39[1] | 26 | |
| Selenium, Total | µg/L | 1 | 0.21[1] | 0.24[1] | 26 | |
| Silver, Total | µg/L | 0.2 | 0.07[1] | 0.1[1] | 26 | |
| Thallium, Total | µg/L | 0.2 | 0.094[1] | 0.17 | 26 | |
| Zinc, Total | µg/L | 8 | 2.5[1] | 2.7[1] | 26 | |
| Cyanide | µg/L | 3 | -- | -- | -- | |
| Phenol, Total | µg/L | 10 | -- | -- | -- | |
| Dioxin (2,3,7,8-TCDD) | µg/L | -- | -- | -- | -- | |
| **Other Toxic Priority Pollutants** | | | | | | |
| Barium | µg/L | 3 | 15 | 18 | 26 | |
| Strontium | µg/L | 20 | 80 | 95 | 26 | |

1. This value is based on non-quantified data.
2. The mercury data did not meet the RRV. The data collected was all non-quantified and ranged from 0.02 µg/L to 0.096 µg/L.

## Table 2.B.1 Receiving Water Characteristics—Tributary to Fish Creek

| Parameter | Units | Required Reporting Value (RRV) | Lower Quartile ($C_{25}$) | Upper Quartile ($C_{75}$) | Number of Samples | Comment or Not Applicable (NA) |
|---|---|---|---|---|---|---|
| Biochemical Oxygen Demand | mg/L | -- | -- | -- | -- | |
| Chemical Oxygen Demand | mg/L | -- | -- | -- | -- | |
| Total Organic Carbon | mg/L | -- | -- | -- | -- | |
| Total Suspended Solids | mg/L | -- | 0.52[1] | 2.35[1] | 20 | |
| Ammonia | mg/L | 0.07 | 0.008[1] | 0.02[1] | 20 | |
| Flow | MGD or gpd | | | | | |
| Temperature | °C | -- | 0.1 | 3.7 | 19 | |
| pH | SU | -- | 7.2 | 7.6 | 19 | |
| Chlorine, Total Residual | mg/L | 0.1 | -- | -- | -- | |
| Fecal Coliform | #/100 ml | -- | -- | -- | -- | |
| *E. coli* bacteria, summer | #/100 ml | -- | -- | -- | -- | |
| *E. coli* bacteria, winter | #/100 ml | -- | -- | -- | -- | |
| Nitrite + Nitrate (as N) | mg/L | 0.02 | 0.01[1] | 0.033 | 20 | |
| Total Kjeldahl Nitrogen | mg/L | -- | 0.07[1] | 0.17 | 20 | |
| Total Nitrogen | mg/L | -- | 0.08[1] | 0.2 | 20 | |
| Oil & Grease | mg/L | -- | 1[1] | 2[1] | 19 | |
| Total Phosphorus | mg/L | -- | 0.02 | 0.025 | 20 | |
| Dissolved Oxygen | mg/L | 0.3 | -- | -- | -- | |
| Turbidity | NTU | -- | 0.33 | 0.92 | 19 | |
| Total Dissolved Solids | mg/L | -- | 36 | 48.8 | 20 | |
| Hardness, Total, as CaCO3 | mg/L | -- | 25.2 | 28.2 | 20 | |
| Fluoride | µg/L | 200 | 34[1] | 89[1] | 20 | |
| Sulfate | mg/L | -- | 3[1] | 3.4[1] | 20 | |

1. This value is based on non-quantified data.

## Table 2.B.2 Receiving Water Characteristics—Tributary to Fish Creek

| Parameter | Units | Required Reporting Value (RRV) | Lower Quartile ($C_{25}$) | Upper Quartile ($C_{75}$) | Number of Samples | Comment or Not Applicable (NA) |
|---|---|---|---|---|---|---|
| **Metals, Cyanide, Total Phenol, and Dioxin** | | | | | | |
| Antimony, Total | µg/L | 0.5 | 0.15[1] | 0.25[1] | 20 | |
| Arsenic, Total | µg/L | 1 | 10 | 11 | 20 | |
| Beryllium, Total | µg/L | 0.8 | 0.058[1] | 0.1[1] | 20 | |
| Cadmium, Total | µg/L | 0.03 | 0.02[1] | 0.04[1] | 20 | |
| Chromium, Total | µg/L | 10 | 0.24[1] | 0.35[1] | 20 | |
| Copper, Total | µg/L | 2 | 0.2[1] | 0.32[1] | 20 | |
| Lead, Total | µg/L | 0.3 | 0.045[1] | 0.07[1] | 20 | |
| Mercury, Total | µg/L | 0.005 | U[2] | U[2] | 20 | |
| Nickel, Total | µg/L | 2 | 0.19[1] | 0.25[1] | 20 | |
| Selenium, Total | µg/L | 1 | 0.1[1] | 0.25[1] | 20 | |
| Silver, Total | µg/L | 0.2 | 0.071[1] | 0.25[1] | 20 | |
| Thallium, Total | µg/L | 0.2 | 0.05[1] | 0.1[1] | 20 | |
| Zinc, Total | µg/L | 8 | 1.4[1] | 2.5[1] | 20 | |
| Cyanide | µg/L | 3 | -- | -- | -- | |
| Phenol, Total | µg/L | 10 | -- | -- | -- | |
| Dioxin (2,3,7,8-TCDD) | µg/L | -- | -- | -- | -- | |
| **Other Toxic Priority Pollutants** | | | | | | |
| Barium | µg/L | 3 | 1.6 | 1.9 | 20 | |
| Strontium | µg/L | 20 | 11[1] | 12[1] | 20 | |

1. This value is based on non-quantified data.
2. The mercury data did not meet the RRV. The data collected was all non-quantified and ranged from 0.014 µg/L to 0.09 µg/L.

## Table 2.C.1 Receiving Water Characteristics—Middle Fork of Moose Creek

| Parameter | Units | Required Reporting Value (RRV) | Lower Quartile ($C_{25}$) | Upper Quartile ($C_{75}$) | Number of Samples | Comment or Not Applicable (NA) |
|---|---|---|---|---|---|---|
| Biochemical Oxygen Demand | mg/L | -- | -- | -- | -- | |
| Chemical Oxygen Demand | mg/L | -- | -- | -- | -- | |
| Total Organic Carbon | mg/L | -- | -- | -- | -- | |
| Total Suspended Solids | mg/L | -- | 1.2[1] | 10.8 | 37 | |
| Ammonia | mg/L | 0.07 | 0.01[1] | 0.03[1] | 37 | |
| Flow | MGD or gpd | | | | | |
| Temperature | °C | -- | 1.1 | 6.8 | 36 | |
| pH | SU | -- | 7.4 | 7.9 | 36 | |
| Chlorine, Total Residual | mg/L | 0.1 | -- | -- | -- | |
| Fecal Coliform | #/100 ml | -- | -- | -- | -- | |
| *E. coli* bacteria, summer | #/100 ml | -- | -- | -- | -- | |
| *E. coli* bacteria, winter | #/100 ml | -- | -- | -- | -- | |
| Nitrite + Nitrate (as N) | mg/L | 0.02 | 0.05[1] | 0.19 | 37 | |
| Total Kjeldahl Nitrogen | mg/L | -- | 0.22[1] | 0.5[1] | 37 | |
| Total Nitrogen | mg/L | -- | 0.27[1] | 0.69[1] | 37 | |
| Oil & Grease | mg/L | -- | 1[1] | 1.7[1] | 35 | |
| Total Phosphorus | mg/L | -- | 0.008[1] | 0.022 | 37 | |
| Dissolved Oxygen | mg/L | 0.3 | -- | -- | -- | |
| Turbidity | NTU | -- | 0.71 | 2.1 | 35 | |
| Total Dissolved Solids | mg/L | -- | 223 | 259 | 37 | |
| Hardness, Total, as CaCO3 | mg/L | -- | 211 | 240 | 37 | |
| Fluoride | µg/L | 200 | 67[1] | 120[1] | 37 | |
| Sulfate | mg/L | -- | 7.4 | 9.8 | 37 | |

1. This value is based on non-quantified data.

## Table 2.C.2 Receiving Water Characteristics—Middle Fork of Moose Creek

| Parameter | Units | Required Reporting Value (RRV) | Lower Quartile ($C_{25}$) | Upper Quartile ($C_{75}$) | Number of Samples | Comment or Not Applicable (NA) |
|---|---|---|---|---|---|---|
| **Metals, Cyanide, Total Phenol, and Dioxin** | | | | | | |
| Antimony, Total | µg/L | 0.5 | 0.24[1] | 0.29[1] | 37 | |
| Arsenic, Total | µg/L | 1 | 2.4 | 3.7 | 37 | |
| Beryllium, Total | µg/L | 0.8 | 0.069[1] | 0.092[1] | 37 | |
| Cadmium, Total | µg/L | 0.03 | 0.02[1] | 0.04[1] | 37 | |
| Chromium, Total | µg/L | 10 | 0.27[1] | 0.59 | 37 | |
| Copper, Total | µg/L | 2 | 1.2 | 1.9 | 37 | |
| Lead, Total | µg/L | 0.3 | 0.067[1] | 0.4 | 37 | |
| Mercury, Total | µg/L | 0.005 | U[2] | U[2] | 37 | |
| Nickel, Total | µg/L | 2 | 0.38[1] | 0.58 | 37 | |
| Selenium, Total | µg/L | 1 | 0.21[1] | 0.27[1] | 37 | |
| Silver, Total | µg/L | 0.2 | 0.07[1] | 0.25[1] | 37 | |
| Thallium, Total | µg/L | 0.2 | 0.05[1] | 0.05[1] | 37 | |
| Zinc, Total | µg/L | 8 | 2.2[1] | 2.9[1] | 37 | |
| Cyanide | µg/L | 3 | -- | -- | -- | |
| Phenol, Total | µg/L | 10 | -- | -- | -- | |
| Dioxin (2,3,7,8-TCDD) | µg/L | -- | -- | -- | -- | |
| **Other Toxic Priority Pollutants** | | | | | | |
| Barium | µg/L | 3 | 25 | 32 | 37 | |
| Strontium | µg/L | 20 | 73[1] | 88[1] | 37 | |

1. This value is based on non-quantified data.
2. The mercury data did not meet the RRV. The data collected was all non-quantified and ranged from 0.014 µg/L to 0.097 µg/L.

**Table 2.D.1 Receiving Water Characteristics—Tributary to Middle Fork of Moose Creek**

| Parameter | Units | Required Reporting Value (RRV) | Lower Quartile ($C_{25}$) | Upper Quartile ($C_{75}$) | Number of Samples | Comment or Not Applicable (NA) |
|---|---|---|---|---|---|---|
| Biochemical Oxygen Demand | mg/L | -- | -- | -- | -- | |
| Chemical Oxygen Demand | mg/L | -- | -- | -- | -- | |
| Total Organic Carbon | mg/L | -- | -- | -- | -- | |
| Total Suspended Solids | mg/L | -- | 1.8[1] | 4.4 | 11 | |
| Ammonia | mg/L | 0.07 | 0.017[1] | 0.02[1] | 11 | |
| Flow | MGD or gpd | | | | | |
| Temperature | °C | -- | 0.1 | 4.2 | 10 | |
| pH | SU | -- | 7.7 | 7.8 | 10 | |
| Chlorine, Total Residual | mg/L | 0.1 | -- | -- | -- | |
| Fecal Coliform | #/100 ml | -- | -- | -- | -- | |
| *E. coli* bacteria, summer | #/100 ml | -- | -- | -- | -- | |
| *E. coli* bacteria, winter | #/100 ml | -- | -- | -- | -- | |
| Nitrite + Nitrate (as N) | mg/L | 0.02 | 0.035 | 0.11 | 11 | |
| Total Kjeldahl Nitrogen | mg/L | -- | 0.1 | 0.25 | 11 | |
| Total Nitrogen | mg/L | -- | 0.14 | 0.36 | 11 | |
| Oil & Grease | mg/L | -- | 1[1] | 1.6[1] | 11 | |
| Total Phosphorus | mg/L | -- | 0.012 | 0.016 | 11 | |
| Dissolved Oxygen | mg/L | 0.3 | -- | -- | -- | |
| Turbidity | NTU | -- | 1.1 | 2 | 9 | |
| Total Dissolved Solids | mg/L | -- | 160.5 | 190 | 11 | |
| Hardness, Total, as CaCO3 | mg/L | -- | 136.5 | 166.5 | 11 | |
| Fluoride | µg/L | 200 | 70[1] | 105[1] | 11 | |
| Sulfate | mg/L | -- | 4.7 | 6.3 | 11 | |

1. This value is based on non-quantified data.

## Table 2.D.2 Receiving Water Characteristics—Tributary to Middle Fork of Moose Creek

| Parameter | Units | Required Reporting Value (RRV) | Lower Quartile ($C_{25}$) | Upper Quartile ($C_{75}$) | Number of Samples | Comment or Not Applicable (NA) |
|---|---|---|---|---|---|---|
| **Metals, Cyanide, Total Phenol, and Dioxin** | | | | | | |
| Antimony, Total | µg/L | 0.5 | 0.1[1] | 0.25[1] | 11 | |
| Arsenic, Total | µg/L | 1 | 3.7 | 5.0 | 11 | |
| Beryllium, Total | µg/L | 0.8 | 0.092[1] | 0.092[1] | 11 | |
| Cadmium, Total | µg/L | 0.03 | 0.028[1] | 0.028[1] | 11 | |
| Chromium, Total | µg/L | 10 | 0.35[1] | 0.49 | 11 | |
| Copper, Total | µg/L | 2 | 0.57 | 1 | 11 | |
| Lead, Total | µg/L | 0.3 | 0.08[1] | 0.2 | 11 | |
| Mercury, Total | µg/L | 0.005 | U[2] | U[2] | 11 | |
| Nickel, Total | µg/L | 2 | 0.12[1] | 0.21[1] | 11 | |
| Selenium, Total | µg/L | 1 | 0.094[1] | 0.22[1] | 11 | |
| Silver, Total | µg/L | 0.2 | 0.04[1] | 0.25[1] | 11 | |
| Thallium, Total | µg/L | 0.2 | 0.019[1] | 0.05[1] | 11 | |
| Zinc, Total | µg/L | 8 | 2.5[1] | 2.9[1] | 11 | |
| Cyanide | µg/L | 3 | -- | -- | -- | |
| Phenol, Total | µg/L | 10 | -- | -- | -- | |
| Dioxin (2,3,7,8-TCDD) | µg/L | -- | -- | -- | -- | |
| **Other Toxic Priority Pollutants** | | | | | | |
| Barium | µg/L | 3 | 21 | 24 | 11 | |
| Strontium | µg/L | 20 | 59.5 | 72 | 11 | |

1. This value is based on non-quantified data.
2. The mercury data did not meet the RRV. The data collected was all non-quantified and ranged from 0.037 µg/L to 0.072 µg/L.

## APPENDIX 3—EFFLUENT CHARACTERISTICS

The fact sheet must include a description of the type and quantity of wastes (pollutants) to be discharged. This information is used to determine if additional effluent limitations are necessary. Effluent monitoring and characterization is based on the daily discharge of pollutants and summarized as monthly average and daily maximum values as defined in ARM 17.30.1304. The 30-day average maximum daily values and samples size reported by the permittee are given in the following tables. This data must be based on the previous 3-5 years and represent the current operation of the facility or be estimated by the permittee.

For purposes for determining reasonable potential and assessing the need for a WQBEL, DEQ calculates a reasonable measure of the maximum daily effluent concentration. This procedure is referred to as a reasonable potential analysis (RPA) and is discussed in Section 2.2.7 and Appendix 4. Due to the non-normal distribution of most effluents and low sample frequency (small sample size), DEQ estimates the effluent concentration based on the 95$^{th}$ percentile of the expected effluent concentration following procedure described in EPA's *Technical Support Document for Water Quality Based Toxic Control*, EPA/505/2-90-001, March 1991. The critical effluent pollutant concentration ($C_d$) is based on the estimated 95$^{th}$ percentile value and used in the RPA to assess the need for WQBEL.

There are two methods for determining $C_d$. The method used depends on whether all or some of the reported measurements are quantified values (reported above the reporting level) or no measurement is reported as a quantified value.

### 1. Determining $C_d$ where *some or all measurements are quantified* *(based on EPA TSD, pp. 51-53)*

$$C_{d(critical)} = C_{95\text{-}TSD} = C_{d(max)} \times \frac{EXP[z_{0.95} \cdot (\ln(1+CV^2))^{0.5} - 0.5 \cdot \ln(1+CV^2)]}{EXP[z_{(1-0.95)^{(1/n)}} \cdot (\ln(1+CV^2))^{0.5} - 0.5 \cdot \ln(1+CV^2)]}$$

Where:

| | | |
|---|---|---|
| $C_{d(max)}$ | = | maximum measured and quantified effluent pollutant concentration |
| n | = | number of effluent pollutant concentration measurements in the data set |
| $z_x$ | = | the z-statistic for the *x* percentile |

***If n < 10 and some measurements are non-quantified***
CV = 0.6

***If n ≥ 10 and all measurements are quantified***
CV = standard deviation / mean

***If n ≥ 10 and there are both quantified and non-quantified measurements***
CV = 0.6

## 2. Determining $C_{d(critical)}$ when *no measurement is reported as a quantified value*

***If the total number of measurements in the data set is ≥ 30***
Estimate $C_d$ as: $C_d$ = "< highest reporting limit achieved"

***If the total number of measurements in the summary data set < 30***

Estimate $C_d$ as:

$$C_d = C_{d(max)} X \frac{EXP[z_{0.95} \cdot (\ln(1+CV^2))^{0.5} - 0.5 \cdot \ln(1+CV^2)]}{EXP[z_{(1-0.95)^{(1/n)}} \cdot (\ln(1+CV^2))^{0.5} - 0.5 \cdot \ln(1+CV^2)]}$$

Where $C_{d(max)}$ is set equal to the highest reporting level achieved

The critical effluent concentration ($C_d$) calculated by DEQ is based on the coefficient of variation (CV) and multiplying factor given in the following tables.

The permittee provided estimates of the effluent quality on the application Form 2D. In addition, supplemental information was provided for the parameter cadmium. The estimated effluent quality was based on a bench scale engineering study of the reverse osmosis treatment system. Effluent characteristics are described in Tables 3.A.1 thru 3.A.2.

**Table 3.A.1 Effluent Characteristics— Conventional and Nonconventional Pollutants Outfalls 001, 002, 003, 004, 005, 006**

| Parameter | Units | Maximum 30-day Average | Maximum Daily | Number of Samples (n) | Coefficient of Variation (CV) | Multiplying Factor 95% Confidence Level | Critical Effluent Concentration ($C_d$) |
|---|---|---|---|---|---|---|---|
| Biochemical Oxygen Demand (BOD5) | mg/L | -- | -- | -- | -- | -- | -- |
| Chemical Oxygen Demand (COD) | mg/L | -- | -- | -- | -- | -- | -- |
| Organic Carbon – Total (TOC) | mg/L | -- | -- | -- | -- | -- | -- |
| Total Suspended Solids (TSS) | mg/L | < 0.57 | < 0.57 | 1 | 0.6 | 6.2 | 3.53 |
| Ammonia (as N) | mg/L | 0.06 | 0.06 | 1 | 0.6 | 6.2 | 0.372 |
| Flow (Outfall 001) | gpm | 350 | 450 | -- | -- | -- | -- |
| Flow (Outfall 002) | gpm | 200 | 200 | -- | -- | -- | -- |
| Flow (Outfall 003) | gpm | 60 | 60 | -- | -- | -- | -- |
| Flow (Outfall 004) | gpm | 140 | 140 | -- | -- | -- | -- |
| Flow (Outfall 005) | gpm | 0 | 100 | -- | -- | -- | -- |
| Flow (Outfall 006) | gpm | 0 | 60 | -- | -- | -- | -- |
| Temperature, winter | °C | 8.1 | 8.1 | 1 | -- | -- | -- |
| Temperature, summer | °C | 8.1 | 8.1 | 1 | -- | -- | -- |
| pH, Std units, maximum | SU | 5.5 | 5.5 | 1 | -- | -- | -- |
| pH, Std units, minimum | SU | 5.5 | 5.5 | 1 | -- | -- | -- |
| Chlorine, Total Residual | mg/L | -- | -- | -- | -- | -- | -- |
| Fecal Coliform | #/100 ml | -- | -- | -- | -- | -- | -- |
| *E. coli* bacteria, summer | #/100 ml | -- | -- | -- | -- | -- | -- |
| *E. coli* bacteria, winter | #/100 ml | -- | -- | -- | -- | -- | -- |
| Nitrite + Nitrate (as N) | mg/L | 0.1 | 0.1 | 1 | 0.6 | 6.2 | 0.62 |
| Kjeldahl Nitrogen – Total (as N) | mg/L | 0.11 | 0.11 | 1 | 0.6 | 6.2 | 0.68 |
| Nitrogen – Total | mg/L | 0.21 | 0.21 | 1 | 0.6 | 6.2 | 1.3 |
| Oil & Grease – Total Recoverable | mg/L | -- | -- | -- | -- | -- | -- |
| Phosphorus – Total | mg/L | 0.005 | 0.005 | 1 | 0.6 | 6.2 | 0.031 |
| Oxygen, dissolved - maximum | mg/L | -- | -- | -- | -- | -- | -- |
| Oxygen, dissolved - minimum | mg/L | -- | -- | -- | -- | -- | -- |
| Turbidity | NTU | 0.19 | 0.19 | 1 | 0.6 | 6.2 | 1.18 |
| Total Dissolved Solids | mg/L | 10 | 10 | 1 | 0.6 | 6.2 | 62 |
| Hardness, Total, as CaCO3 | mg/L | 2.9 | 2.9 | 1 | -- | -- | -- |
| Fluoride | µg/L | 50 | 50 | 1 | 0.6 | 6.2 | 310 |
| Sulfate | mg/L | 1.8 | 1.8 | 1 | 0.6 | 6.2 | 11.16 |

## Table 3.A.2. Toxic Priority Pollutants— Outfalls 001, 002, 003, 004

| Parameter | Units | Maximum 30-day Average from Application | Maximum Daily | Number of Samples (n) | Coefficient of Variation (CV) | Multiplying Factor 95% Confidence Level | Critical Effluent Concentration ($C_d$) |
|---|---|---|---|---|---|---|---|
| Antimony, Total Recoverable | µg/L | -- | -- | -- | -- | -- | -- |
| Arsenic, Total Recoverable | µg/L | 1.5 | 1.5 | 1 | 0.6 | 6.2 | 9.3 |
| Beryllium, Total Recoverable | µg/L | -- | -- | -- | -- | -- | -- |
| Cadmium, Total Recoverable | µg/L | < 0.028 | < 0.028 | 1 | 0.6 | 6.2 | 0.17 |
| Chromium, Total Recoverable | µg/L | 0.31 | 0.31 | 1 | 0.6 | 6.2 | 1.922 |
| Copper, Total Recoverable | µg/L | 0.4 | 0.4 | 1 | 0.6 | 6.2 | 2.48 |
| Lead, Total Recoverable | µg/L | 0.16 | 0.16 | 1 | 0.6 | 6.2 | 0.992 |
| Mercury, Total Recoverable | µg/L | < 0.037 | < 0.037 | 1 | 0.6 | 6.2 | 0.23 |
| Nickel, Total Recoverable | µg/L | 0.16 | 0.16 | 1 | 0.6 | 6.2 | 0.992 |
| Selenium, Total Recoverable | µg/L | < 0.22 | < 0.22 | 1 | 0.6 | 6.2 | 1.36 |
| Silver, Total Recoverable | µg/L | -- | -- | -- | -- | -- | -- |
| Thallium, Total Recoverable | µg/L | -- | -- | -- | -- | -- | -- |
| Zinc, Total Recoverable | µg/L | 2.9 | 2.9 | 1 | 0.6 | 6.2 | 18 |
| Cyanide, Total as CN | µg/L | -- | -- | -- | -- | -- | -- |
| Phenol, Total | µg/L | -- | -- | -- | -- | -- | -- |
| Dioxin (2,3,7,8-TCDD) | µg/L | -- | -- | -- | -- | -- | -- |
| Aluminum, Total | µg/L | 3.3 | 3.3 | 1 | 0.6 | 6.2 | 20.46 |
| Barium, Total | µg/L | 0.8 | 0.8 | 1 | 0.6 | 6.2 | 4.96 |
| Boron, Total | µg/L | 7.1 | 7.1 | 1 | 0.6 | 6.2 | 44.02 |
| Magnesium, Dissolved | µg/L | 330 | 330 | 1 | 0.6 | 6.2 | 2046 |
| Manganese, Total | µg/L | 1.2 | 1.2 | 1 | 0.6 | 6.2 | 7.44 |
| Strontium, Total Recoverable | µg/L | 2.8 | 2.8 | 1 | 0.6 | 6.2 | 17.36 |

## APPENDIX 4—REASONABLE POTENTIAL ANALYSIS (RPA)

Following 40 CFR 122.44(d), an effluent limit must be established in the permit if there is reasonable potential (RP) that any parameter of concern (POC) in the discharge causes or contributes to an excursion of a numeric or narrative water quality standard, including nondegradation based standards. POC are identified in Section 2.2.4 of this permit fact sheet. For new sources, DEQ considers the nondegradation criteria of ARM 17.30.715 as narrative standards and these criteria are incorporated into this analysis as applicable water quality standards for new sources. The applicability of the nondegradation criteria to the discharge(s) are discussed in Section 2.2.5 of this permit fact sheet. The resultant receiving water concentration ($C_r$) for the POC is calculated from the modified steady state mass-balance equation (*Equation 1*) expressed in terms of the dilution ratio (D) provided by a mixing zone:

$$C_r = \frac{C_d + (D \times C_s)}{(1 + D)} \qquad \textit{Equation 2}$$

Where:

| | | |
|---|---|---|
| $D_{a/c}$ | = | acute dilution ratio ($D_a$) or chronic dilution ratio ($D_c$), Section 2.2.6 |
| $C_s$ | = | critical receiving water pollutant concentration, Appendix 2 |
| $C_d$ | = | critical effluent pollutant concentration, Appendix 3 |
| $C_r$ | = | resultant receiving water pollutant concentration |

Where the calculated value of $C_r$ exceeds any applicable water quality standard (S) or nondegradation criterion ($S_{ND}$), there is a finding of RP and a WQBEL is required for that parameter. WQBELs are discussed in Section 2.2.8 and calculated for these pollutant(s) in Appendix 5 of this permit fact sheet.

Two values of $C_r$ will be calculated because the resulting receiving water concentration is a function of the dilution ratio. $C_{r\text{-}a}$ is the receiving water concentration based on the acute dilution ratio ($D_a$) and, $C_{r\text{-}c}$, is the receiving water concentration based on numeric chronic dilution ratio ($D_c$), granted for chronic aquatic life, human health or other narrative criterion.

Specifically, RP is demonstrated for any applicable acute aquatic life standard ($S_a$), if:

$$C_{r\text{-}a} \geq S_a$$

Where $C_{r\text{-}a}$ is calculated as follows:

$$C_{r\text{-}a} = \frac{C_d + (D_a \times C_s)}{(1 + D_a)}$$

For a chronic aquatic life ($S_c$) or human health ($S_{hh}$) standard, RP is demonstrated if:

$$C_{r\text{-}c} \geq [S_c \text{ or } S_{hh}]$$

Where $C_{r\text{-}c}$ is calculated as follows:

$$C_{r\text{-}c} = \frac{C_d + (D_c \times C_s)}{(1 + D_c)}$$

Based on a finding that the discharge is a new source in Section 2.2.5 of this permit fact sheet, the applicable nondegradation criterion ($S_{ND}$) is given in Appendix 1. For purposes of this analysis, all nondegradation criteria are considered to be chronic criteria and apply outside of any applicable

mixing zone (ARM 17.30.505(1)(b)). For new sources subject to the nondegradation criteria of ARM 17.30.715, RP is demonstrated as follows:

$$C_{r\text{-}c} \geq S_{ND}$$

Where $C_{r\text{-}c}$ is calculated as follows:

$$C_r = \frac{C_d + (D_c \times C_s)}{(1 + D_c)}$$

For new sources, RP for acute aquatic life standards are calculated as described above.

Tables 4.A, 4.B, 4.C, 4.D summarize the acute and chronic RPA based on the steady state model, equation 2, for new sources subject to nondegradation requirements.

Input values for the RPA are given in previous sections of this permit fact sheet for this discharger, and summarized as follows:

| Parameter | Description | Source of Information |
|---|---|---|
| $S_a$ , $S_c$ , $S_{hh}$ | Applicable Water Quality Standards | Section 2.2.2, Appendix 1 |
| $S_{ND}$ | Applicable Nondegradation Criterion | Section 2.2.5, Appendix 1 |
| $C_d$ | Critical Effluent Pollutant Concentration | Section 1.2.1, Appendix 3 |
| $C_s$ | Critical Receiving Water Pollutant Concentration | Section 2.2.2, Appendix 2 |
| $D_a$ , $D_c$ | Applicable Dilution Ratio | Mixing Zones, Section 2.2.6 |

As stated in section 2.2.6, a mixing zone was not granted. Therefore, $D_a$ and $D_c$ are both zero in the equation above.

**Table 4.A— Reasonable Potential Analysis (RPA) for Individual Parameters—Discharges Subject to Nondegradation Criteria**
**Outfall 001 discharging to Basin Creek**

| Parameter | Units | Acute Water Quality Standard | Nondeg. Criterion | Critical Effluent Concentration | Critical Background Receiving Water Concentration | Acute Dilution Factor | Chronic Dilution Factor | Projected Receiving Water Concentration Acute | Projected Receiving Water Concentration Nondeg. | RPA | Rationale Comments |
|---|---|---|---|---|---|---|---|---|---|---|---|
| | | $S_a$ | $S_{ND}$ | $C_d$ | $C_s$ | $D_a$ | $D_{ND}$ | $C_{r-a}$ | $C_{r-ND}$ | Y/N/U | |
| Ammonia (as N) | mg/L | 3.8 | 0.013[1] | 0.37 | 0.013[1] | 0 | 0 | 0.37 | 0.37 | Y | |
| Arsenic, Total Recoverable | µg/L | 340 | 7.2 | 9.3 | 7.2 | 0 | 0 | 9.3 | 9.3 | Y | |
| Barium, Total | µg/L | -- | 15 | 4.96 | 15 | 0 | 0 | 4.96 | 4.96 | N | |
| Cadmium, Total Recoverable | µg/L | 4.01 | 0.028[1] | 0.17 | 0.028[1] | 0 | 0 | 0.17 | 0.17 | Y | |
| Chromium, Total Recoverable | µg/L | -- | 0.36[1] | 1.92 | 0.36[1] | 0 | 0 | 1.92 | 1.92 | Y | |
| Copper, Total Recoverable | µg/L | 25.12 | 1.3 | 2.48 | 1.3 | 0 | 0 | 2.48 | 2.48 | Y | |
| Fluoride | µg/L | -- | 80[1] | 310 | 80[1] | 0 | 0 | 310 | 310 | Y | |
| Lead, Total Recoverable | µg/L | 179.9 | 0.15 | 0.992 | 0.15 | 0 | 0 | 0.992 | 0.992 | Y | |
| Mercury, Total Recoverable | µg/L | 1.7 | 0.0075 | 0.23 | U | 0 | 0 | 0.23 | 0.23 | Y | |
| Nickel, Total Recoverable | µg/L | 793.1 | 0.16[1] | 0.992 | 0.16[1] | 0 | 0 | 0.992 | 0.992 | Y | |
| Nitrite + Nitrate (as N) | mg/L | -- | 0.14 | 0.62 | 0.14 | 0 | 0 | 0.62 | 0.62 | Y | |
| Nitrogen – Total | mg/L | -- | 0.18[1] | 1.3 | 0.18[1] | 0 | 0 | 1.3 | 1.3 | Y | |
| Phosphorus – Total | mg/L | -- | 0.012 | 0.031 | 0.012 | 0 | 0 | 0.031 | 0.031 | Y | |
| Selenium, Total Recoverable | µg/L | 20 | 0.21[1] | 1.36 | 0.21[1] | 0 | 0 | 1.36 | 1.36 | Y | |
| Strontium, Total Recoverable | µg/L | -- | 80 | 17.36 | 80 | 0 | 0 | 17.36 | 17.36 | N | |
| Total Suspended Solids (TSS) | mg/L | -- | 3.7 | 3.53 | 3.7 | 0 | 0 | 3.53 | 3.53 | Y | TBEL requires WQBEL |
| Zinc, Total Recoverable | µg/L | 202.7 | 2.5[1] | 18 | 2.5[1] | 0 | 0 | 18 | 18 | Y | |

1. This value is based on non-quantified data.

**Table 4.B—Reasonable Potential Analysis (RPA) for Individual Parameters—Discharges Subject to Nondegradation Criteria Outfall 002 discharging to a Tributary of Fish Creek**

| Parameter | Units | Acute Water Quality Standard | Nondeg. Criterion | Critical Effluent Concentration | Critical Background Receiving Water Concentration | Acute Dilution Factor | Chronic Dilution Factor | Projected Receiving Water Concentration Acute | Projected Receiving Water Concentration Nondeg. | RPA | Rationale Comments |
|---|---|---|---|---|---|---|---|---|---|---|---|
| | | $S_a$ | $S_{ND}$ | $C_d$ | $C_s$ | $D_a$ | $D_{ND}$ | $C_{r-a}$ | $C_{r-ND}$ | Y/N/U | |
| Ammonia (as N) | mg/L | 11.4 | 0.6 | 0.37 | 0.02[1] | 0 | 0 | 0.37 | 0.37 | N | |
| Arsenic, Total Recoverable | µg/L | 340 | 10 | 9.3 | 10 | 0 | 0 | 9.3 | 9.3 | N | |
| Barium, Total | µg/L | -- | 150 | 4.96 | 1.9 | 0 | 0 | 4.96 | 4.96 | N | |
| Cadmium, Total Recoverable | µg/L | 3.86 | 0.06 | 0.17 | 0.04[1] | 0 | 0 | 0.17 | 0.17 | Y | |
| Chromium, Total Recoverable | µg/L | -- | 15 | 1.92 | 0.35[1] | 0 | 0 | 1.92 | 1.92 | N | |
| Copper, Total Recoverable | µg/L | 24.23 | 2.3 | 2.48 | 0.32[1] | 0 | 0 | 2.48 | 2.48 | Y | |
| Fluoride | µg/L | -- | 600 | 310 | 89[1] | 0 | 0 | 310 | 310 | N | |
| Lead, Total Recoverable | µg/L | 171.3 | 1 | 0.992 | 0.07[1] | 0 | 0 | 0.992 | 0.992 | Y | TBEL requires WQBEL |
| Mercury, Total Recoverable | µg/L | 1.7 | 0.0075 | 0.23 | U | 0 | 0 | 0.23 | 0.23 | Y | |
| Nickel, Total Recoverable | µg/L | 767.8 | 12.81 | 0.992 | 0.25[1] | 0 | 0 | 0.992 | 0.992 | N | |
| Nitrite + Nitrate (as N) | mg/L | -- | 1.5 | 0.62 | 0.033 | 0 | 0 | 0.62 | 0.62 | N | |
| Nitrogen – Total | mg/L | -- | 0.08[1] | 1.3 | 0.08[1] | 0 | 0 | 1.3 | 1.3 | Y | |
| Phosphorus – Total | mg/L | -- | 0.02 | 0.031 | 0.02 | 0 | 0 | 0.031 | 0.031 | Y | |
| Selenium, Total Recoverable | µg/L | 20 | 0.75 | 1.36 | 0.25[1] | 0 | 0 | 1.36 | 1.36 | Y | |
| Strontium, Total Recoverable | µg/L | -- | 600 | 17.36 | 12[1] | 0 | 0 | 17.36 | 17.36 | N | |
| Total Suspended Solids (TSS) | mg/L | -- | 0.52[1] | 3.53 | 0.52[1] | 0 | 0 | 3.53 | 3.53 | Y | |
| Zinc, Total Recoverable | µg/L | 196.2 | 29.4 | 18 | 2.5[1] | 0 | 0 | 18 | 18 | Y | TBEL requires WQBEL |

1. This value is based on non-quantified data.

**Table 4.C—Reasonable Potential Analysis (RPA) for Individual Parameters—Discharges Subject to Nondegradation Criteria Outfall 003, 005, 006 discharging to Middle Fork of Moose Creek**

| Parameter | Units | Acute Water Quality Standard | Nondeg. Criterion | Critical Effluent Concentration | Critical Background Receiving Water Concentration | Acute Dilution Factor | Chronic Dilution Factor | Projected Receiving Water Concentration Acute | Projected Receiving Water Concentration Nondeg. | RPA | Rationale Comments |
|---|---|---|---|---|---|---|---|---|---|---|---|
| | | $S_a$ | $S_{ND}$ | $C_d$ | $C_s$ | $D_a$ | $D_{ND}$ | $C_{r-a}$ | $C_{r-ND}$ | Y/N/U | |
| Ammonia (as N) | mg/L | 6.8 | 0.42 | 0.37 | 0.03[1] | 0 | 0 | 0.37 | 0.37 | N | |
| Arsenic, Total Recoverable | µg/L | 340 | 2.4[1] | 9.3 | 2.4[1] | 0 | 0 | 9.3 | 9.3 | Y | |
| Barium, Total | µg/L | -- | 150 | 4.96 | 32 | 0 | 0 | 4.96 | 4.96 | N | |
| Cadmium, Total Recoverable | µg/L | 4.56 | 0.07 | 0.17 | 0.04[1] | 0 | 0 | 0.17 | 0.17 | Y | |
| Chromium, Total Recoverable | µg/L | -- | 15 | 1.92 | 0.59 | 0 | 0 | 1.92 | 1.92 | N | |
| Copper, Total Recoverable | µg/L | 28.29 | 2.6 | 2.48 | 1.9 | 0 | 0 | 2.48 | 2.48 | Y | TBEL requires WQBEL |
| Fluoride | µg/L | -- | 600 | 310 | 120[1] | 0 | 0 | 310 | 310 | N | |
| Lead, Total Recoverable | µg/L | 211.2 | 1.23 | 0.992 | 0.4 | 0 | 0 | 0.992 | 0.992 | Y | TBEL requires WQBEL |
| Mercury, Total Recoverable | µg/L | 1.7 | 0.0075 | 0.23 | U | 0 | 0 | 0.23 | 0.23 | Y | |
| Nickel, Total Recoverable | µg/L | 882.4 | 14.7 | 0.992 | 0.58 | 0 | 0 | 0.992 | 0.992 | N | |
| Nitrite + Nitrate (as N) | mg/L | -- | 1.5 | 0.62 | 0.19 | 0 | 0 | 0.62 | 0.62 | N | |
| Nitrogen – Total | mg/L | -- | 0.27[1] | 1.3 | 0.27[1] | 0 | 0 | 1.3 | 1.3 | Y | |
| Phosphorus – Total | mg/L | -- | 0.008[1] | 0.031 | 0.008[1] | 0 | 0 | 0.031 | 0.031 | Y | |
| Selenium, Total Recoverable | µg/L | 20 | 0.75 | 1.36 | 0.27[1] | 0 | 0 | 1.36 | 1.36 | Y | |
| Strontium, Total Recoverable | µg/L | -- | 600 | 17.36 | 88[1] | 0 | 0 | 17.36 | 17.36 | N | |
| Total Suspended Solids (TSS) | mg/L | -- | 1.2[1] | 3.53 | 1.2[1] | 0 | 0 | 3.53 | 3.53 | Y | |
| Zinc, Total Recoverable | µg/L | 225.6 | 33.8 | 18 | 2.9[1] | 0 | 0 | 18 | 18 | Y | TBEL requires WQBEL |

1. This value is based on non-quantified data.

**Table 4.D—Reasonable Potential Analysis (RPA) for Individual Parameters—Discharges Subject to Nondegradation Criteria Outfall 004 discharging to a Tributary to Middle Fork of Moose Creek**

| Parameter | Units | Acute Water Quality Standard | Nondeg. Criterion | Critical Effluent Concentration | Critical Background Receiving Water Concentration | Acute Dilution Factor | Chronic Dilution Factor | Projected Receiving Water Concentration Acute | Projected Receiving Water Concentration Nondeg. | RPA | Rationale Comments |
|---|---|---|---|---|---|---|---|---|---|---|---|
| | | $S_a$ | $S_{ND}$ | $C_d$ | $C_s$ | $D_a$ | $D_{ND}$ | $C_{r-a}$ | $C_{r-ND}$ | Y/N/U | |
| Ammonia (as N) | mg/L | 8.1 | 0.48 | 0.37 | 0.02[1] | 0 | 0 | 0.37 | 0.37 | N | |
| Arsenic, Total Recoverable | µg/L | 340 | 3.7 | 9.3 | 3.7 | 0 | 0 | 9.3 | 9.3 | Y | |
| Barium, Total | µg/L | -- | 150 | 4.96 | 24 | 0 | 0 | 4.96 | 4.96 | N | |
| Cadmium, Total Recoverable | µg/L | 2.67 | 0.05 | 0.17 | 0.028[1] | 0 | 0 | 0.17 | 0.17 | Y | |
| Chromium, Total Recoverable | µg/L | -- | 15 | 1.92 | 0.49 | 0 | 0 | 1.92 | 1.92 | N | |
| Copper, Total Recoverable | µg/L | 17.21 | 1.7 | 2.48 | 1 | 0 | 0 | 2.48 | 2.48 | Y | |
| Fluoride | µg/L | -- | 600 | 310 | 105[1] | 0 | 0 | 310 | 310 | N | |
| Lead, Total Recoverable | µg/L | 107.9 | 0.6 | 0.992 | 0.2 | 0 | 0 | 0.992 | 0.992 | Y | |
| Mercury, Total Recoverable | µg/L | 1.7 | 0.0075 | 0.23 | 0.0075 | 0 | 0 | 0.23 | 0.23 | Y | |
| Nickel, Total Recoverable | µg/L | 564.7 | 9.42 | 0.992 | 0.21[1] | 0 | 0 | 0.992 | 0.992 | N | |
| Nitrite + Nitrate (as N) | mg/L | -- | 1.5 | 0.62 | 0.11 | 0 | 0 | 0.62 | 0.62 | N | |
| Nitrogen – Total | mg/L | -- | 0.14 | 1.3 | 0.14 | 0 | 0 | 1.3 | 1.3 | Y | |
| Phosphorus – Total | mg/L | -- | 0.012 | 0.031 | 0.012 | 0 | 0 | 0.031 | 0.031 | Y | |
| Selenium, Total Recoverable | µg/L | 20 | 0.75 | 1.36 | 0.22[1] | 0 | 0 | 1.36 | 1.36 | Y | |
| Strontium, Total Recoverable | µg/L | -- | 600 | 17.36 | 72 | 0 | 0 | 17.36 | 17.36 | N | |
| Total Suspended Solids (TSS) | mg/L | -- | 1.8[1] | 3.53 | 1.8[1] | 0 | 0 | 3.53 | 3.53 | Y | |
| Zinc, Total Recoverable | µg/L | 144.3 | 21.6 | 18 | 2.9[1] | 0 | 0 | 18 | 18 | Y | TBEL requires WQBEL |

1. This value is based on non-quantified data.

## APPENDIX 5—WLA AND WQBEL DEVELOPMENT

In accordance with 40 CFR 122.44(d) the permit must contain an effluent limit for any parameter which DEQ determines has a reasonable potential to cause or contribute to a violation of water quality standards, including nondegradation based standards. This determination was completed in Appendix 4 and discussed in Section 2.2.7 of the fact sheet. WQBELs are derived from a wasteload allocation (WLA) which is calculated based on the applicable numeric water quality standard and background pollutant concentration in the receiving water during the critical conditions described in Section 2.2.7. For existing discharges, WLAs are based on acute aquatic life, chronic aquatic life, and human health standards, and, for new discharges, from the applicable nondegradation criteria (see Section 2.2.5.). These WLAs are then translated into maximum daily limitations (MDLs) and average monthly limitations (AMLs) to reflect the respective averaging times given in the surface water quality standards (ARM 17.30.635), Circular DEQ-7, and MPDES requirements at ARM 17.30.1345.

For new sources subject to nondegradation criteria described in Section 2.2.5, WQBELs must protect existing water quality unless an authorization to degrade state waters pursuant ARM 17.30.706 -708 has been issued. As defined in ARM 17.30.702, existing water quality is defined as the quality of the receiving water immediately prior to commencement of the activity or that which can adequately be demonstrated to have existed on or after July 1, 1971, whichever is the highest. Because background concentration ($C_s$) affects the determination of the nondegradation criterion, the following procedure is used to calculate WLAs for new sources:

| Receiving Water Condition | Determination of WLA With Respect to Background Concentration |
|---|---|
| $C_s < S_{ND} < S$ | Available dilution<br>Calculate WLA using Equation 3 (see below) substituting $S_{ND}$ for S in the equation |
| $S_{ND} < C_s < S$ | No dilution is available<br>Set WLA = $C_s$<br>No increase above background allowed |
| $S_{ND} < S < C_s$ | No assimilative capacity; See ARM 17.30.1311(7)<br>No dilution is available (D= 0)<br>Set WLA = S |
| **Where**:<br>$C_s$ = critical upstream receiving water pollutant concentration<br>WLA = wasteload allocation<br>$S_{ND}$ = allowable in-stream concentration based on applicable nondegradation criterion<br>S = allowable in-stream concentration based on applicable numeric water quality standard | |

For existing sources where the background concentration (Cs) exceeds the applicable water quality standard (S), the WLA is set at the standard (WLA = S) unless DEQ has determined through a TMDL that the background pollutant is due to natural sources.

Following selection of the appropriate instream target and background condition, the WLA is calculated from the steady state mass-balanced model following:

$$C_{WLA} = S + D(S - C_s) \qquad \textit{Equation } 3$$

Where:

| | | |
|---|---|---|
| $C_{WLA}$ | = | wasteload allocation, calculated |
| $S/S_{ND}$ | = | numeric water quality standard or nondegradation criterion |
| D | = | dilution ratio (see Section 2.2.6 of permit fact sheet) |
| $C_s$ | = | critical receiving water pollutant concentration prior to discharge |

Acute and nondegradation-based WLAs based on Equation 3 are given in Tables 5.A, 5.B, 5.C, 5.D.

**WLA BASED ON APPROVED TMDL- NOT APPLICABLE (SEE SECTION 2.2.3)**

A WLA may also be developed for point sources dischargers as part of a watershed or basin wide TMDL pursuant to 75-5-703, MCA, for those water bodies that are indentified as threatened or impaired. The MWQA requires that upon approval of the TMDL, the WLA shall be incorporated into the discharge permit. A WLA developed as part of a basin wide TMDL may be based on critical conditions other than those conditions specified in ARM 17.30.635 for permit limits. The stringency of the two different limits must be evaluated and the more restrictive WLA incorporated into the permit. The TMDL based WLA ($WLA_{TMDL}$) must be compared to calculated $C_{WLA}$ based on Equation 3, to determine which limit is more protective. The final effluent limitations for these pollutants must meet the requirements of the TMDL, any applicable technology-based standards, numeric water quality standards or nondegradation criterion.

**AQUATIC LIFE EFFLUENT LIMITATIONS**

In most cases, there are at least two aquatic life WLAs, namely a WLA based on the acute aquatic life standard ($WLA_a$) and at least one WLA based on the chronic aquatic life standard ($WLA_c$ or $WLA_{30\text{-day c}}$ for ammonia). For each of these WLAs, there is a corresponding long-term average effluent concentration (LTA) calculated by multiplying the WLA by a factor (WLA multiplier). This multiplier is a statistically-based factor derived from the ratio of the WLA, set at a specific percentile value, to the LTA. The value of the multiplier varies depending on the coefficient of variation (CV) of the data set (see Tables 5.A, 5.B, 5.C, 5.D below), the percentile value for the WLA (e.g., 99$^{th}$ percentile), and whether the WLA is based on an acute (1-hour average) or chronic (typically, 4-day average), or 30-day chronic (for ammonia) water quality standard. DEQ sets the WLA at the 99$^{th}$ percentile on the lognormal distribution. The equations for the WLA multipliers (WLA $\text{multiplier}_{acute99}$, WLA $\text{multiplier}_{chronic99}$, WLA $\text{multiplier}_{30\text{-day chronic99}}$) and the corresponding LTAs are shown below:

$$\text{WLA multiplier}_{acute99} = EXP\ (0.5\sigma^2 - z\sigma)$$
$$\text{WLA multiplier}_{chronic99} = EXP\ (0.5\sigma_4^2 - z\sigma_4)$$
$$\text{WLA multiplier}_{30\text{-day chronic99}} = EXP\ (0.5\sigma_{30}^2 - z\sigma_{30})$$

Where

$\sigma$ = standard deviation

$\sigma = [ln(CV^2 + 1)]^{0.5}$

$\sigma^2 = ln(CV^2 + 1)$

$\sigma_4 = [ln(CV^2/4 + 1)]^{0.5}$

$\sigma_4^2 = ln(CV^2/4 + 1)$

$\sigma_{30} = [ln(CV^2/30 + 1)]^{0.5}$

$\sigma_{30}^2 = ln(CV^2/30 + 1)$

z = 2.326 for 99th percentile probability basis

$LTA_a = WLA_a * \text{WLA multiplier}_{acute99}$

$LTA_c = WLA_c * \text{WLA multiplier}_{chronic99}$

$LTA_{30\text{-day c}} = WLA_{30\text{-day c}} * \text{WLA multiplier}_{30\text{-day chronic99}}$

Because the calculated LTAs do not have different averaging periods, they can be directly compared to select the most protective aquatic life LTA (i.e., the one that ensures that both of the aquatic life WLAs are met). This WLA is the basis for calculating effluent limitations that protect aquatic life from both acute and chronic effects.

The two aquatic life LTAs represent two performance levels that the facility would need to maintain—one that will protect against acute toxic effects and one that will protect against chronic toxic effects. By comparing the two LTAs and selecting the minimum LTA as the basis for aquatic life WQBELs for the facility, the procedure ensures that the calculated AML and MDL are based on a single performance level that will protect against both acute and chronic toxic effects.

$LTA_m$ = Minimum of $LTA_a$ and $LTA_c$ (and $LTA_{30\text{-day c}}$ for ammonia)

Effluent limitations for protection of aquatic life are calculated by multiplying the most protective aquatic life LTA by multipliers, which are based on the lognormal distribution. Each multiplier is a statistically-based factor reflects the relationship between the LTA and the effluent limitations. The value of the multiplier for each effluent limitation varies depending on:

- the **probability basis** of the effluent limitation (i.e., the percentile value on the lognormal distribution of effluent pollutant concentrations where the limitation will be set, such as 95th percentile or 99th percentile);
- the **CV** of the data set; and
- the **number of samples** (for the AML) that will be averaged in order to measure compliance with the effluent limitation.

The AML and MDL multipliers are based on the following:

- setting the AML at a 95th percentile occurrence probability and the MDL at a 99th percentile occurrence probability; these probability bases are consistent with EPA's recommendations in the TSD and consistent with the probability bases EPA uses to derive technology-based requirements in the effluent guidelines;
- the CV used in the reasonable potential determination (i.e., a calculated CV if there are at least 10 data points available or a default CV of 0.6 if a CV cannot be calculated); and

- the actual monthly sampling frequency that will be required in the permit, unless the planned sampling frequency is one time per month or less; if the sampling frequency that will be specified in the permit is one time per month or less, DEQ uses a value for sampling frequency (n) in the formula for calculating the AML that is greater than one. This procedure assumes a sampling frequency of two to four times per month in order to ensure that the AML will not exceed any of the calculated WLAs, as recommended in EPA's TSD (pp. 107-108).

The formula for calculating the AML and the MDL from the most protective aquatic life LTA are shown below:

$AML_{aquatic\ life} = LTA \times AML_{multiplier95}$
$MDL_{aquatic\ life} = LTA \times MDL_{multiplier99}$

$AML_{multiplier95} = e^{\wedge}(z\sigma_n - 0.5\sigma_n^2)$

Where:
$\sigma_n = [ln(CV^2/n + 1)]^{0.5}$
$\sigma_n^2 = ln(CV^2/n + 1)$
z = 1.645 for 95th percentile probability basis
n = number of samples per month that will be required in the permit

$MDL_{multiplier99} = e^{\wedge}(z\sigma - 0.5\sigma^2)$

Where:
$\sigma_n = [ln(CV^2 + 1)]^{0.5}$
$\sigma_n^2 = ln(CV^2 + 1)$
z = 2.326 for 99th percentile probability basis

For parameters whose chronic aquatic life water quality standard is expressed as a single numeric value, there will be only a single corresponding WLA. The following procedure applies:
- Consider the single WLA to be $WLA_c$;
- Using the CV determined in the reasonable potential analysis, calculate an LTA that will allow the effluent to meet $WLA_c$ using the equations for the chronic WLA above; and
- Derive an AML and and MDL based on the LTA and CV using the equations above.

**HUMAN HEALTH EFFLUENT LIMITATIONS**

Montana's numeric human health numeric standards are expressed as values not to be exceeded in any surface or ground water sample. Because of this requirement, it is necessary to set human health effluent limitations that meet a given WLA every day. Effluent limitations for protection of human health are based on the following procedure:
- Set the MDL equal to the $WLA_{human\ health}$
- Calculate the AML for human health by multiplying the MDL by the AML:MDL ratio derived from the lognormal distribution and the relationships between the LTA, MDL, and AML.

The equation for this ratio based on the CV and the number of samples is shown below.

Set MDL = $WLA_{human\ health}$

AML = MDL x AML:MDL multiplier

$$\text{AML : MDL multiplier} = \frac{\exp[z_a\sigma - 0.5\sigma_n^2]}{\exp[z_m\sigma - 0.5\sigma\ ]}$$

Where:

$\sigma_n^2 = [ln(CV^2/n+1)]$
$\sigma^2 = ln(CV^2+1)$
CV = the coefficient of variation
n = number of samples per month that will be required in the permit
$z_m$ = 2.326 (i.e., value of z for the 99th percentile probability basis)
$z_a$ = 1.645 (i.e., value of z for the 95th percentile probability basis)

**NONDEGRADATION-BASED EFFLUENT LIMITATIONS**

Effluent limitations are calculated from nondegradation criteria using the procedures for aquatic life standards described above, treating the nondegradation criterion in the same manner as a chronic standard for purposes of calculating an LTA. A second LTA is calculated based on the acute water quality standard. The two LTAs represent two performance levels that the facility would need to maintain—one that will protect against acute toxic effects and one that will meet nondegradation criteria. By comparing the two LTAs and selecting the minimum LTA as the basis for WQBELs for the facility, the procedure ensures that the calculated AML and MDL are based on a single performance level that will protect against acute toxic effects and meet nondegradation criteria.

$LTA_m$ = Minimum of $LTA_a$ and $LTA_{ND}$

The remainder of the procedure for calculating the AML and MDL from the lowest LTA follows the procedures for aquatic life standards described above. These limitations are the final WQBELs for the parameter.

For nutrients only, the concern is related to the effects over the growing season rather than an acute or chronic toxicity. Therefore, DEQ will only set an AML. The nondegradation AML will be equal to the 25th percentile of the ambient water quality.

**FINAL WQBEL DETERMINATION**

- For **discharges not subject to nondegradation criteria**, DEQ compares the AML and MDL calculated from the aquatic life standards to the AML and MDL calculated from human health standards. The lowest AML and the lowest MDL are the final WQBELs because the lowest of each of these limitations will assure attainment of both the aquatic life and human health standards.

- For **discharges subject to nondegradation criteria** no further comparison is needed to determine the final WQBELs. The procedures outlined above ensure attainment of both the nondegradation criteria and water quality standards.

## Table 5.A WQBELs for Discharges Subject to Nondegradation Criteria Outfall 001 Basin Creek

| Parameter | Units | Acute Wasteload Allocation ($WLA_a$) | Nondegradation Wasteload Allocation ($WLA_{ND}$)[1] | Coefficient of Variation (CV) | Acute Long Term Average ($LTA_a$) | Nondegradation Long Term Average ($LTA_{ND}$) | Minimum Long Term Average ($LTA_m$) | Final WQ-based Effluent Limitations | |
|---|---|---|---|---|---|---|---|---|---|
| | | | | | | | | AML | MDL |
| Ammonia | mg/L | 3.8 | 0.013 | 0.6 | 1.22 | 0.0069 | 0.0069 | 0.011 | 0.021 |
| Arsenic | µg/L | 340 | 7.2 | 0.6 | 109.14 | 3.79 | 3.79 | 5.9 | 11.8 |
| Cadmium | µg/L | 4.01 | 0.028 | 0.6 | 1.3 | 0.01 | 0.01 | 0.02 | 0.05 |
| Chromium | µg/L | -- | 0.36 | 0.6 | -- | 0.19 | 0.19 | 0.29 | 0.59 |
| Copper | µg/L | 25.12 | 1.3 | 0.6 | 8.06 | 0.69 | 0.69 | 1.1 | 2.1 |
| Fluoride | µg/L | -- | 80 | 0.6 | -- | 42 | 42 | 65 | 131 |
| Lead | µg/L | 179.9 | 0.15 | 0.6 | 57.75 | 0.08 | 0.08 | 0.12 | 0.25 |
| Mercury | µg/L | 1.7 | 0.0075[2] | 0.6 | 0.55 | 0.004 | 0.004 | 0.006 | 0.012 |
| Nickel | µg/L | 793.1 | 0.16 | 0.6 | 254.6 | 0.08 | 0.08 | 0.13 | 0.26 |
| Nitrite + Nitrate (as N) | mg/L | -- | 0.14 | 0.6 | -- | 0.07 | 0.07 | 0.11 | 0.23 |
| Nitrogen | mg/L | -- | 0.18 | 0.6 | -- | -- | -- | 0.18 | -- |
| Phosphorus | mg/L | -- | 0.012 | 0.6 | -- | -- | -- | 0.012 | -- |
| Selenium | µg/L | 20 | 0.21 | 0.6 | 6.42 | 0.11 | 0.11 | 0.17 | 0.34 |
| Total Suspended Solids (TSS) | mg/L | -- | 3.7 | 0.6 | -- | 1.95 | 1.95 | 3.0 | 6.1 |
| Zinc | µg/L | 202.7 | 2.5 | 0.6 | 65.1 | 1.3 | 1.3 | 2.0 | 4.1 |

1. Based on the A-closed water quality standard, no increase above naturally occurring conditions. DEQ used the 25th percentile of the ambient data.
2. Ambient data was not collected at the RRV, therefore the 25th percentile of the ambient data cannot be determined. The nondegradation criterion was established by taking 15% of the human health standard.

## Table 5.B WQBELs for Discharges Subject to Nondegradation Criteria Outfall 002 Tributary to Fish Creek

| Parameter | Units | Acute Wasteload Allocation ($WLA_a$) | Nondegradation Wasteload Allocation ($WLA_{ND}$)[1] | Coefficient of Variation (CV) | Acute Long Term Average ($LTA_a$) | Nondegradation Long Term Average ($LTA_{ND}$) | Minimum Long Term Average ($LTA_m$) | Final WQ-based Effluent Limitations | |
|---|---|---|---|---|---|---|---|---|---|
| | | | | | | | | AML | MDL |
| Cadmium | µg/L | 3.86 | 0.06 | 0.6 | 1.24 | 0.03 | 0.03 | 0.05 | 0.1 |
| Copper | µg/L | 24.23 | 2.3 | 0.6 | 7.78 | 1.21 | 1.21 | 1.9 | 3.8 |
| Lead | µg/L | 171.3 | 1 | 0.6 | 54.99 | 0.53 | 0.53 | 0.8 | 1.6 |
| Mercury | µg/L | 1.7 | 0.0075[2] | 0.6 | 0.55 | 0.004 | 0.004 | 0.006 | 0.012 |
| Nitrogen | mg/L | -- | 0.08 | 0.6 | -- | -- | -- | 0.08 | -- |
| Phosphorus | mg/L | -- | 0.02 | 0.6 | -- | -- | -- | 0.02 | -- |
| Selenium | µg/L | 20 | 0.75 | 0.6 | 6.42 | 0.4 | 0.4 | 0.61 | 1.23 |
| Total Suspended Solids (TSS) | mg/L | -- | 0.52 | 0.6 | -- | 0.27 | 0.27 | 0.4 | 0.9 |
| Zinc | µg/L | 196.2 | 29.4 | 0.6 | 63 | 15.5 | 15.5 | 24.0 | 48.2 |

1. Based on the lowest applicable standard of chronic aquatic life or human health. See ARM 17.30.715.
2. Ambient data was not collected at the RRV, therefore the 25th percentile cannot be determined. The nondegradation criterion was established by taking 15% of the human health standard.

## Table 5.C WQBELs for Discharges Subject to Nondegradation Criteria Outfalls 003, 005, 006 Middle Fork of Moose Creek

| Parameter | Units | Acute Wasteload Allocation ($WLA_a$) | Nondegradation Wasteload Allocation ($WLA_{ND}$)[1] | Coefficient of Variation (CV) | Acute Long Term Average ($LTA_a$) | Nondegradation Long Term Average ($LTA_{ND}$) | Minimum Long Term Average ($LTA_m$) | Final WQ-based Effluent Limitations | |
|---|---|---|---|---|---|---|---|---|---|
| | | | | | | | | AML | MDL |
| Arsenic | µg/L | 340 | 2.4 | 0.6 | 109.14 | 1.26 | 1.26 | 2.0 | 3.9 |
| Cadmium | µg/L | 4.56 | 0.07 | 0.6 | 1.46 | 0.04 | 0.04 | 0.06 | 0.11 |
| Copper | µg/L | 28.29 | 2.6 | 0.6 | 9.1 | 1.37 | 1.37 | 2.1 | 4.3 |
| Lead | µg/L | 211.2 | 1.23 | 0.6 | 67.8 | 0.65 | 0.65 | 1 | 2 |
| Mercury | µg/L | 1.7 | 0.0075[2] | 0.6 | 0.55 | 0.004 | 0.004 | 0.006 | 0.012 |
| Nitrogen | mg/L | -- | 0.27 | 0.6 | -- | -- | -- | 0.27 | -- |
| Phosphorus | mg/L | -- | 0.008 | 0.6 | -- | -- | -- | 0.008 | -- |
| Selenium | µg/L | 20 | 0.75 | 0.6 | 6.42 | 0.4 | 0.4 | 0.61 | 1.23 |
| Total Suspended Solids (TSS) | mg/L | -- | 1.2 | 0.6 | -- | 0.63 | 0.63 | 1.0 | 2.0 |
| Zinc | µg/L | 225.6 | 33.8 | 0.6 | 72.4 | 17.8 | 17.8 | 27.6 | 55.5 |

1. Based on the lowest applicable standard of chronic aquatic life or human health. See ARM 17.30.715.
2. Ambient data was not collected at the RRV, therefore the 25th percentile cannot be determined. The nondegradation criterion was established by taking 15% of the human health standard.

## Table 5.D WQBELs for Discharges Subject to Nondegradation Criteria Outfall 004 Tributary to Middle Fork of Moose Creek

| Parameter | Units | Acute Wasteload Allocation ($WLA_a$) | Nondegradation Wasteload Allocation ($WLA_{ND}$)[1] | Coefficient of Variation (CV) | Acute Long Term Average ($LTA_a$) | Nondegradation Long Term Average ($LTA_{ND}$) | Minimum Long Term Average ($LTA_m$) | Final WQ-based Effluent Limitations | |
|---|---|---|---|---|---|---|---|---|---|
| | | | | | | | | AML | MDL |
| Arsenic | µg/L | 340 | 3.7 | 0.6 | 109.14 | 1.95 | 1.95 | 3.0 | 6.1 |
| Cadmium | µg/L | 2.67 | 0.05 | 0.6 | 0.86 | 0.03 | 0.03 | 0.04 | 0.08 |
| Copper | µg/L | 17.21 | 1.7 | 0.06 | 5.52 | 0.9 | 0.9 | 1.4 | 2.8 |
| Lead | µg/L | 107.9 | 0.6 | 0.6 | 34.64 | 0.32 | 0.32 | 0.5 | 1.0 |
| Mercury | µg/L | 1.7 | 0.0075[2] | 0.6 | 0.55 | 0.004 | 0.004 | 0.006 | 0.012 |
| Nitrogen | mg/L | -- | 0.14 | 0.6 | -- | -- | -- | 0.14 | -- |
| Phosphorus | mg/L | -- | 0.012 | 0.6 | -- | -- | -- | 0.012 | -- |
| Selenium | µg/L | 20 | 0.75 | 0.6 | 6.42 | 0.4 | 0.4 | 0.61 | 1.23 |
| Total Suspended Solids (TSS) | mg/L | -- | 1.8 | 0.6 | -- | 0.95 | 0.95 | 1.5 | 3.0 |
| Zinc | µg/L | 144.3 | 21.6 | 0.6 | 46.3 | 9.5 | 9.5 | 14.7 | 29.5 |

1. Based on the lowest applicable standard of chronic aquatic life or human health. See ARM 17.30.715.
2. Ambient data was not collected at the RRV, therefore the 25th percentile cannot be determined. The nondegradation criterion was established by taking 15% of the human health standard.

Figure 1

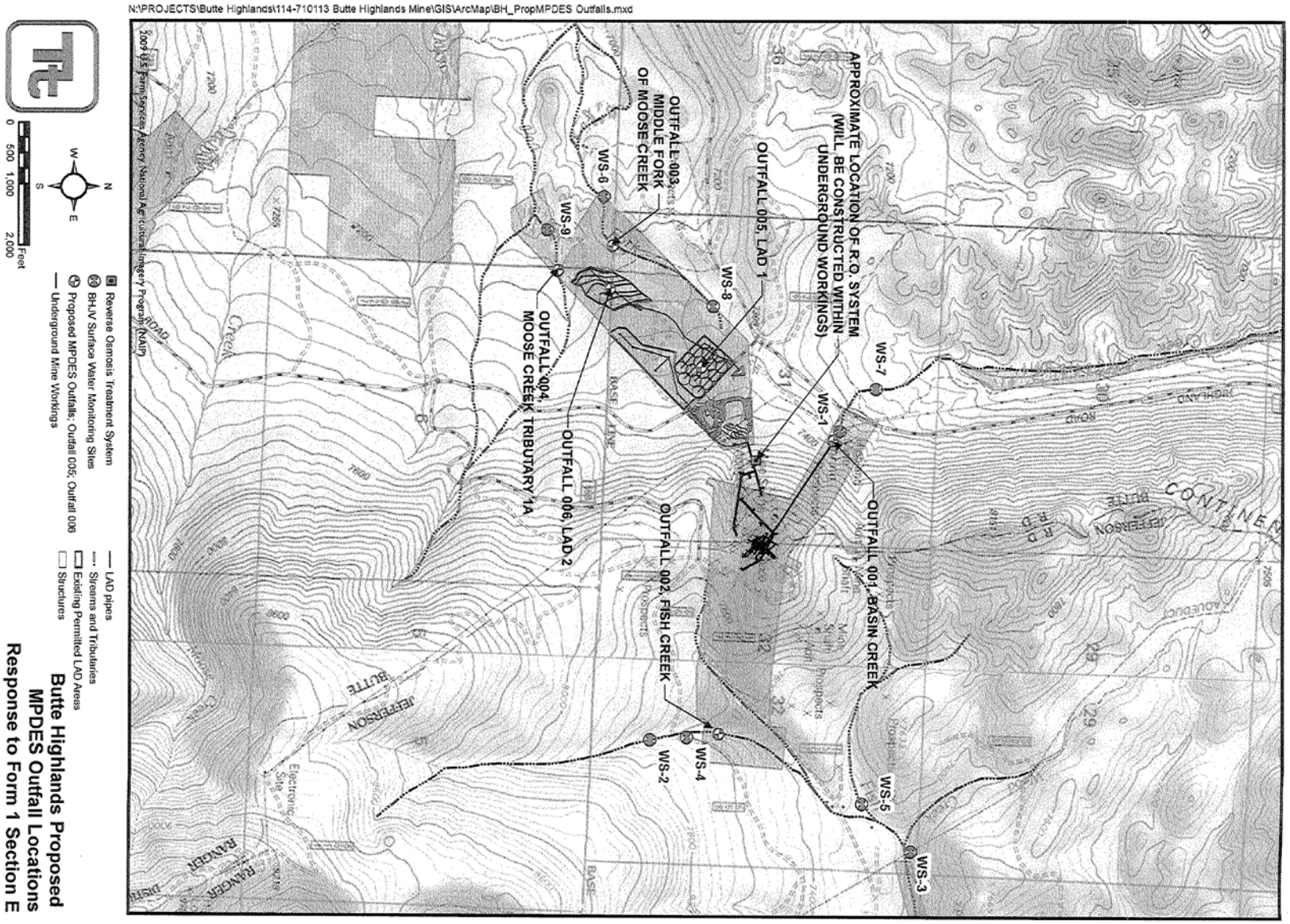
N:\PROJECTS\Butte Highlands\114-710113 Butte Highlands Mine\GIS\ArcMap\BH_PropMPDES Outfalls.mxd
APPROXIMATE LOCATION OF R.O. SYSTEM (WILL BE CONSTRUCTED WITHIN UNDERGROUND WORKINGS)
OUTFALL 001, BASIN CREEK
OUTFALL 002, FISH CREEK
OUTFALL 003, MIDDLE FORK OF MOOSE CREEK
OUTFALL 004, MOOSE CREEK TRIBUTARY 1A
OUTFALL 005, LAD 1
OUTFALL 006, LAD 2
WS-1
WS-2
WS-3
WS-4
WS-5
WS-6
WS-7
WS-8
WS-9
Reverse Osmosis Treatment System
BHJV Surface Water Monitoring Sites
Proposed MPDES Outfalls; Outfall 005; Outfall 006
Underground Mine Workings
LAD pipes
Streams and Tributaries
Existing Permitted LAD Areas
Structures
0 500 1,000 2,000 Feet
N
W
E
S
2009 U.S. Farm Services Agency National Agricultural Imagery Program (NAIP)
Butte Highlands Proposed
MPDES Outfall Locations
Response to Form 1 Section E

Figure 2

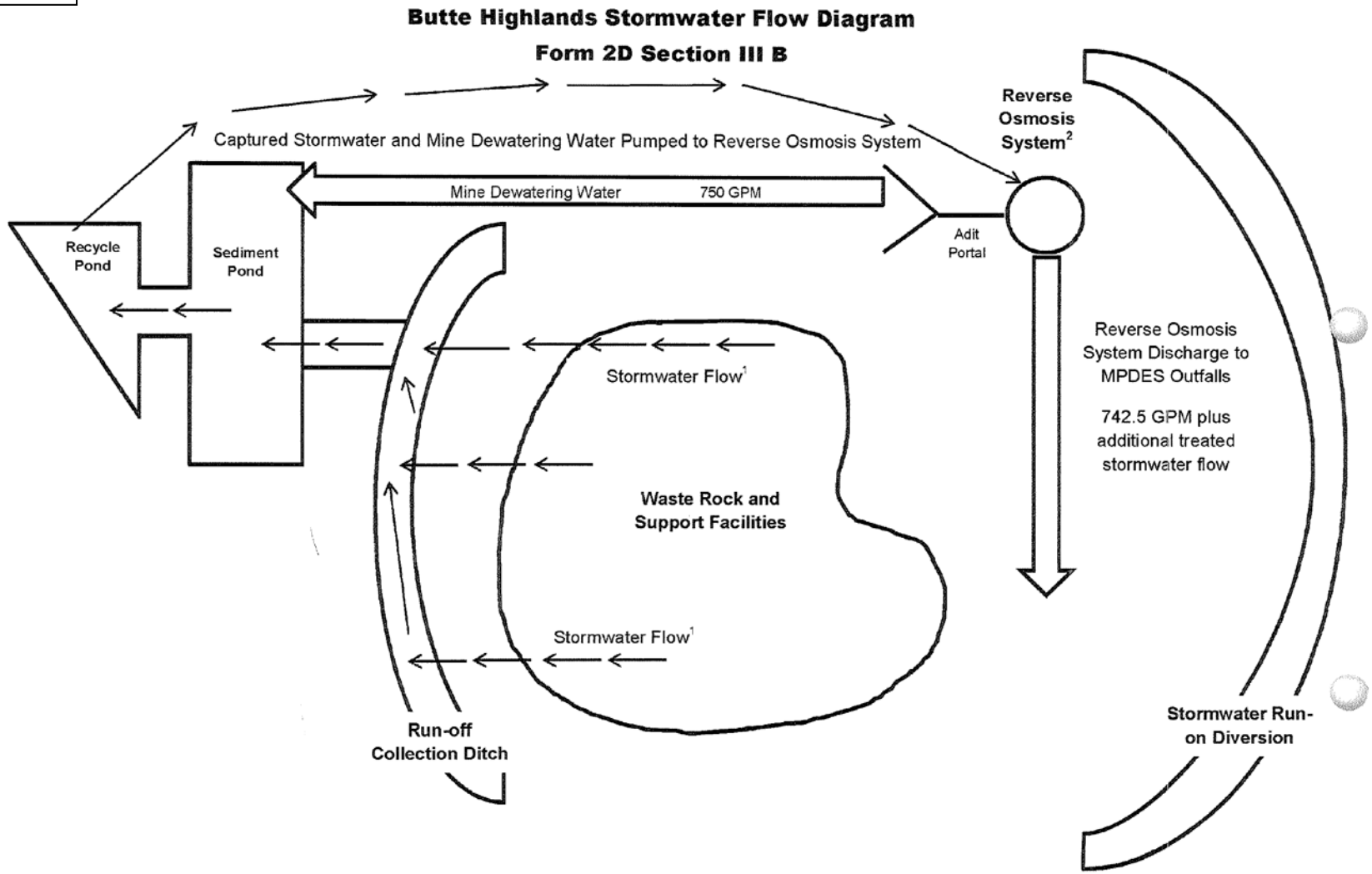


1 = Mine water (stormwater) flow to treatment system would vary. Refer to May 30, 2012 Response to Notice of Deficiency memo for details.

2 = Reverse Osmosis System located inside mine workings. See "Flow Diagram, Butte Highlands Reverse Osmosis Treatment System" for details.

Figure 3

**Flow Diagram**
**Butte Highlands Reverse Osmosis Treatment System**
**Form 2D Section III B**

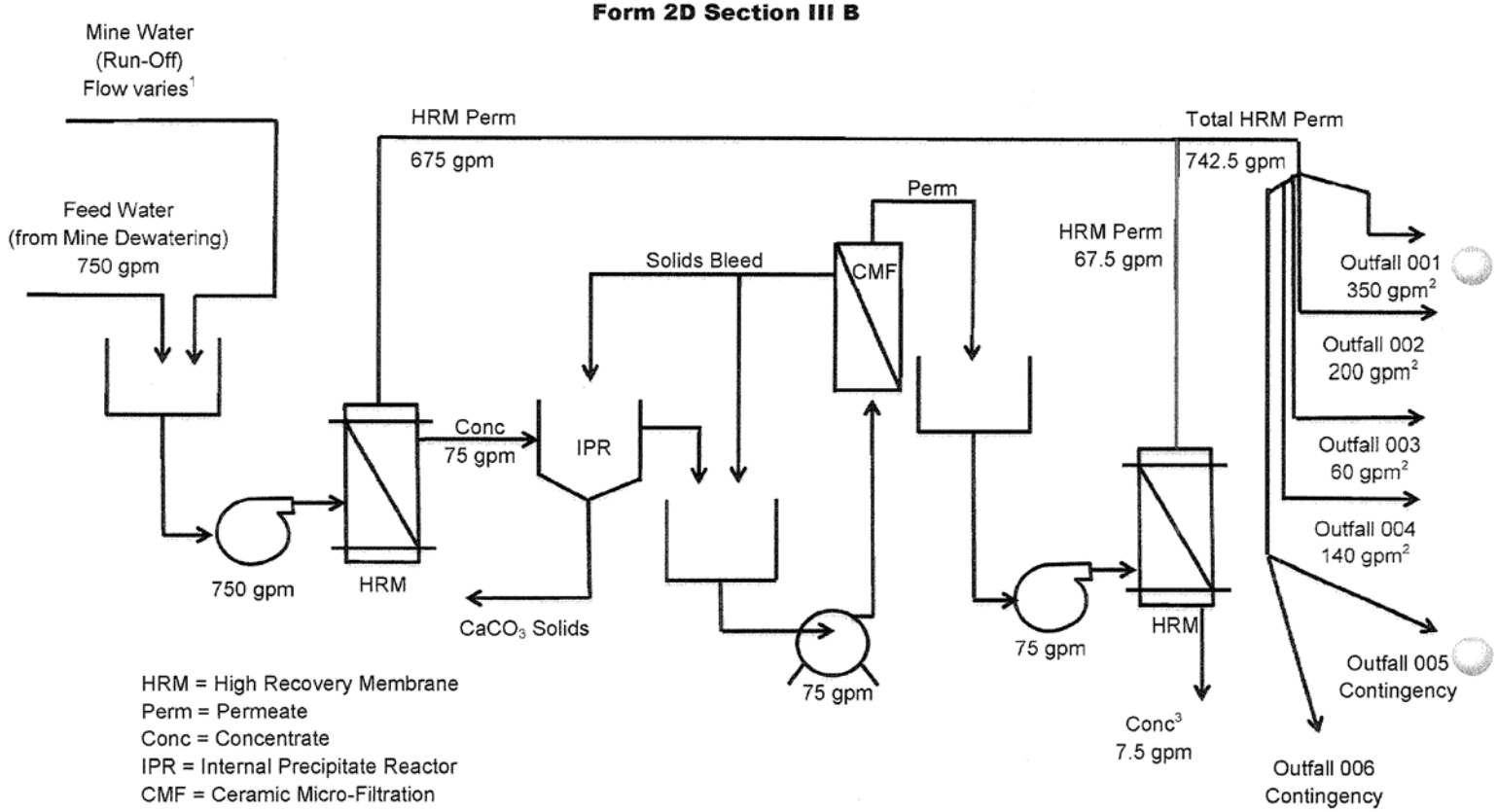


HRM = High Recovery Membrane
Perm = Permeate
Conc = Concentrate
IPR = Internal Precipitate Reactor
CMF = Ceramic Micro-Filtration

1 = Mine water flow to treatment system would vary. Refer to May 30, 2012 Response to Notice of Deficiency memo for details.
2 = Outfall discharge rates have been rounded and do not sum to total HRM Permeate discharge rate.
3 = Treatment and disposal for concentrate are being evaluated. Concentrate will not be discharged to surface water.

Figure 4

**Flow Diagram**
**Butte Highlands Reverse Osmosis Treatment System**
**Contingency Discharge Scenario**
**Form 2D Section III B**

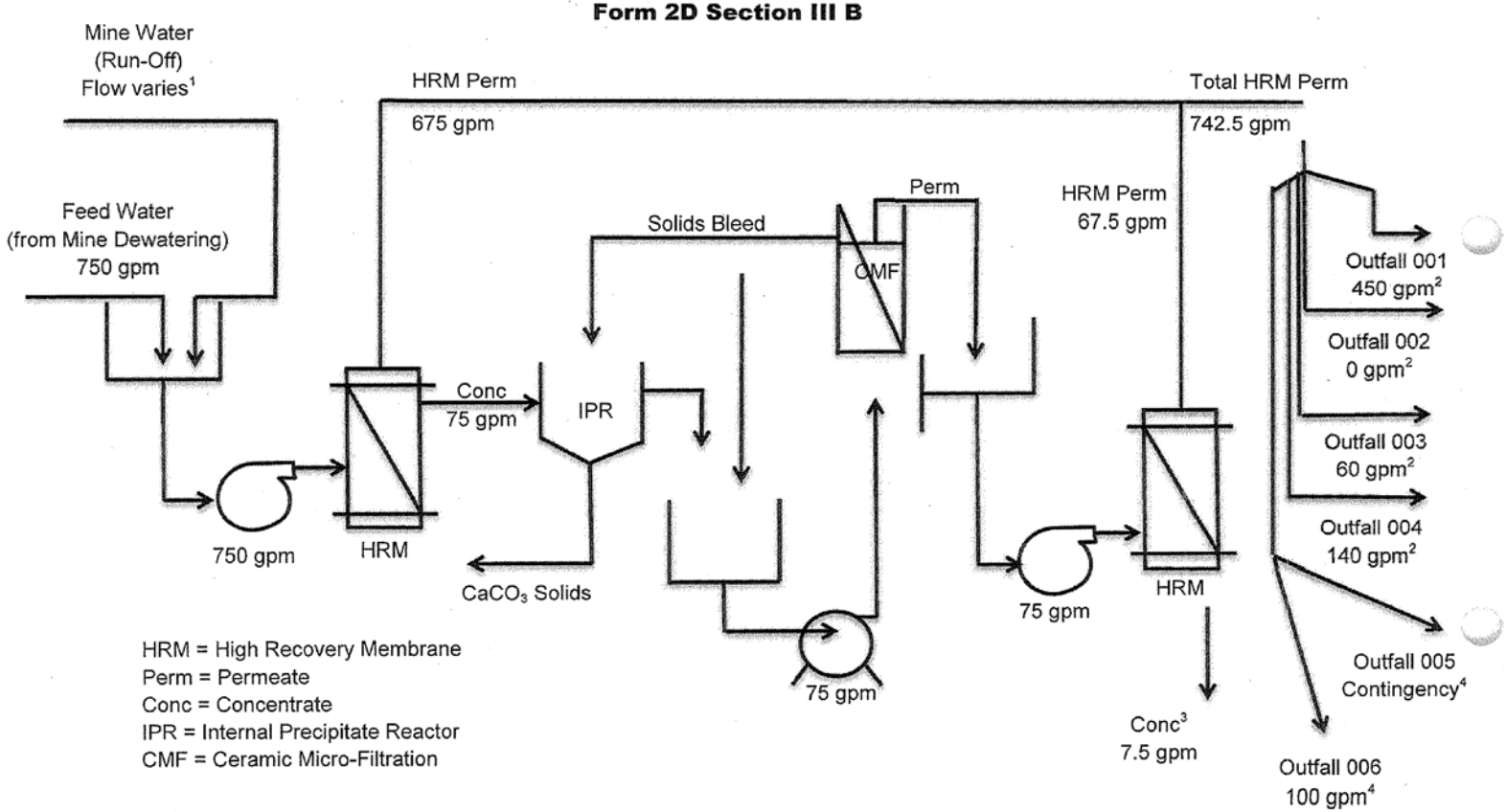


HRM = High Recovery Membrane
Perm = Permeate
Conc = Concentrate
IPR = Internal Precipitate Reactor
CMF = Ceramic Micro-Filtration

1 = Mine water flow to treatment system would vary. Refer to May 30, 2012 Response to Notice of Deficiency memo for details.
2 = Outfall discharge rates have been rounded and do not sum to total HRM Permeate discharge rate.
3 = Treatment and disposal for concentrate are being evaluated. Concentrate will not be discharged to surface water.
4 = Contingency scenario assumes freezing conditions in winter when Outfall 005 (surface irrigation) would be infeasible. Flow redirected to Outfalls 005 and 006 could be proportioned differently during warmer months.