DEPARTMENT OF ENVIRONMENTAL QUALITY
FEDERAL SUPERFUND GROUP
BLACK PINE MINE REPOSITORY CONCEPTUAL DESIGN PLAN SET
GRANITE COUNTY
CONTRACT NO. 414036

MONTANA
MINE WASTE CLEANUP BUREAU

Montana Department of Environmental Quality

HERRERA
101 East Broadway
Suite 610
Missoula, Montana 59802
www.herrerainc.com
(P) 406/721-4204 (F) 406/721-4232

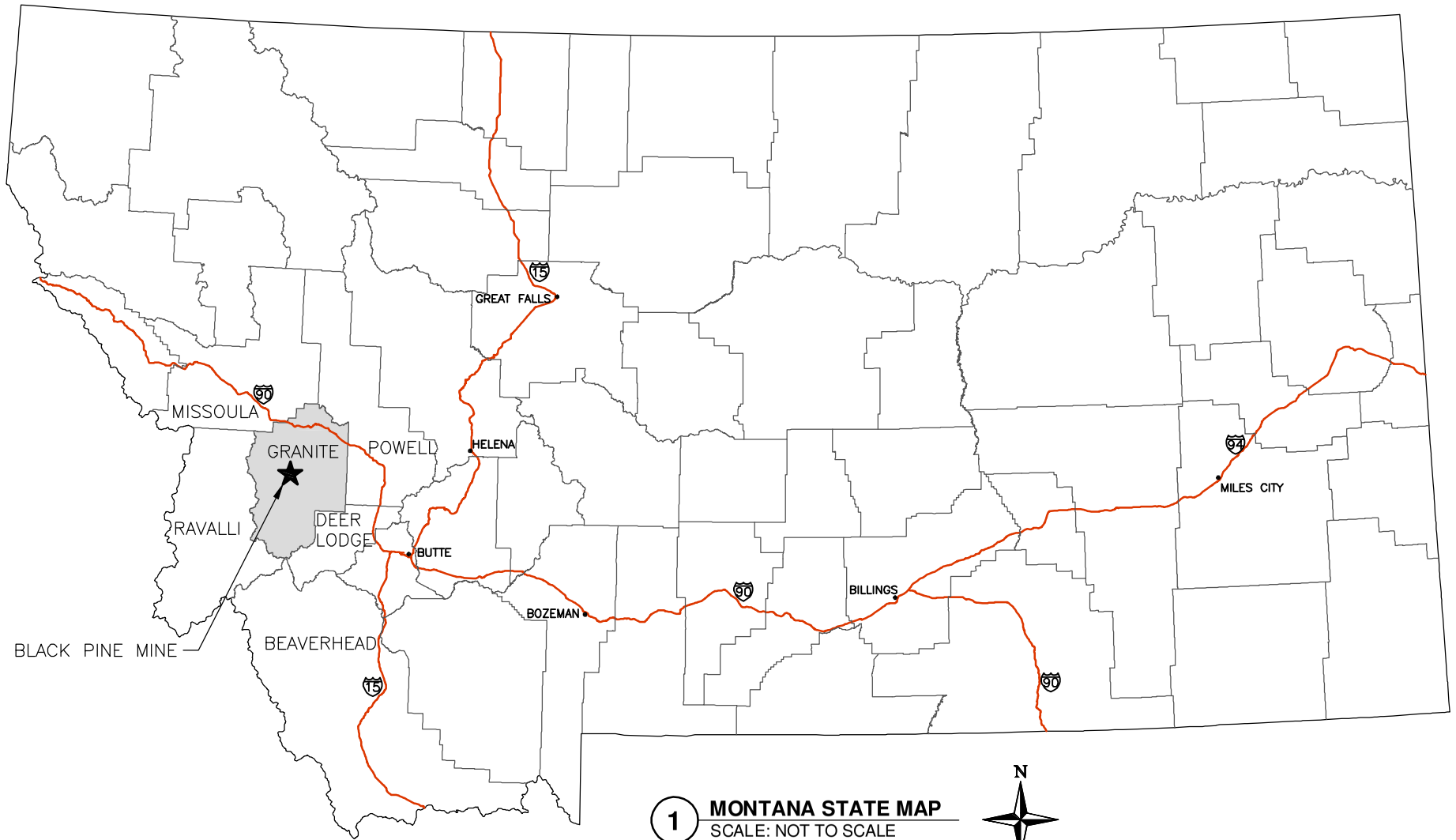

1 MONTANA STATE MAP
SCALE: NOT TO SCALE

SHEET NO.	TITLE	REV.
TITLE	PROJECT LOCATION MAP AND INDEX OF SHEETS	0
1	EXPLANATION AND NOTES	0
2	VICINITY MAP	0
3	SITE ACCESS MAP	0
4	REPOSITORY SITE LAYOUT	0
5	INITIAL EXCAVATION GRADING PLAN	0
6	PROPOSED SITE GRADING PLAN	0
7	EARTHWORK CROSS SECTIONS (1 OF 3)	0
8	EARTHWORK CROSS SECTIONS (2 OF 3)	0
9	EARTHWORK CROSS SECTIONS (3 OF 3)	0
10	USFS ROAD TYPICAL CROSS SECTION AND PROFILE	0
11	GENERAL CONSTRUCTION DETAILS (1 OF 2)	0
12	GENERAL CONSTRUCTION DETAILS (2 OF 2)	0

2 INDEX OF SHEETS

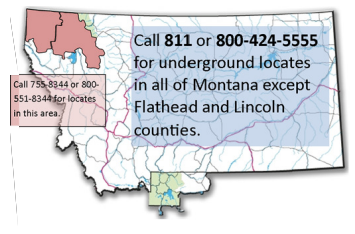

Montana811
Know what's below. Call before you dig.
Source: www.montana811.org

NOTE:

SITE LEGAL DESCRIPTION:
BLACK PINE MINE REPOSITORY, SECTION 16 & 17, TOWNSHIP 8 NORTH, RANGE 14 WEST

CERTIFICATE OF ENGINEER:

I, MARK DONNER, A REGISTERED PROFESSIONAL CIVIL ENGINEER IN THE STATE OF MONTANA, DO HEREBY CERTIFY THAT THESE DRAWINGS WERE PREPARED BY ME OR BY OTHERS UNDER MY DIRECT SUPERVISION AND THAT THESE DRAWINGS ARE CORRECT TO THE BEST OF MY KNOWLEDGE AND BELIEF.

DRAFT

REV.	DATE	DESCRIPTION	BY	CHK'D
0	5/2014	ISSUE FOR CLIENT REVIEW	REP	TH

REVISIONS

DRAWN BY: REP
CHECKED BY: TH
DATE: 5/2014
SCALE: NONE
FILE: 776-COVER

Trihydro CORPORATION
1252 Commerce Drive
Laramie, Wyoming 82070
www.trihydro.com
(P) 307/745.7474 (F) 307/745.7729

PROJECT LOCATION MAP AND INDEX OF SHEETS

BLACK PINE MINE REPOSITORY CONCEPTUAL DESIGN FEDERAL SUPERFUND GROUP

SHEET TITLE

REV: 0

Basemap: U.S. Geological Survey, 1:24,000–Scale 7.5 Minute Digital Raster Graphic Quadrangle, Publication: 1999

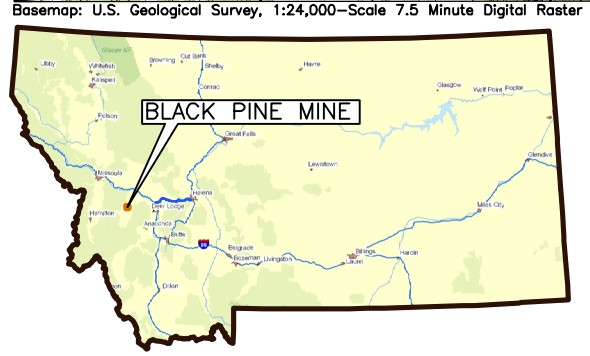

NOTE:

THE BLACK PINE REPOSITORY SITE IS ACCESSED BY TRAVELING NORTH FROM PHILIPSBURG ON HIGHWAY 1, 2.25 MILES TO BLACK PINE ROAD. THE ACCESS ROUTE FOLLOWS BLACK PINE ROAD TO THE WEST AND THEN TURNING NORTH FOR APPROXIMATELY 6.0 MILES TO A JUNCTION WITH FR448. BEARING RIGHT ONTO FR 448 AND TRAVELING AN ADDITIONAL 2.3 MILES ON FR448 TO A JUNCTION WITH FR 678 AND TURNING WEST THE REPOSITORY SITE LIES DIRECTLY ADJACENT TO FR678 TO THE NORTH.

DRAFT

N

0 4 MILES

HERRERA
101 East Broadway
Suite 610
Missoula, Montana 59802
www.herrerainc.com
(P) 406/721-4204 (F) 406/721-4232

REV.	DATE	DESCRIPTION	BY	CHK'D
0	5/2014	ISSUE FOR CLIENT REVIEW	REP	TH

REVISIONS

DRAWN BY: REP
CHECKED BY: TH
DATE: 5/2014
SCALE: 1" = 4 MILES
FILE: 776-VICMAP

Trihydro CORPORATION
1252 Commerce Drive
Laramie, Wyoming 82070
www.trihydro.com
(P) 307/745.7474 (F) 307/745.7729

SITE VICINITY MAP

BLACK PINE MINE REPOSITORY
CONCEPTUAL DESIGN
FEDERAL SUPERFUND GROUP

SHEET 2 OF XX

REV: 0

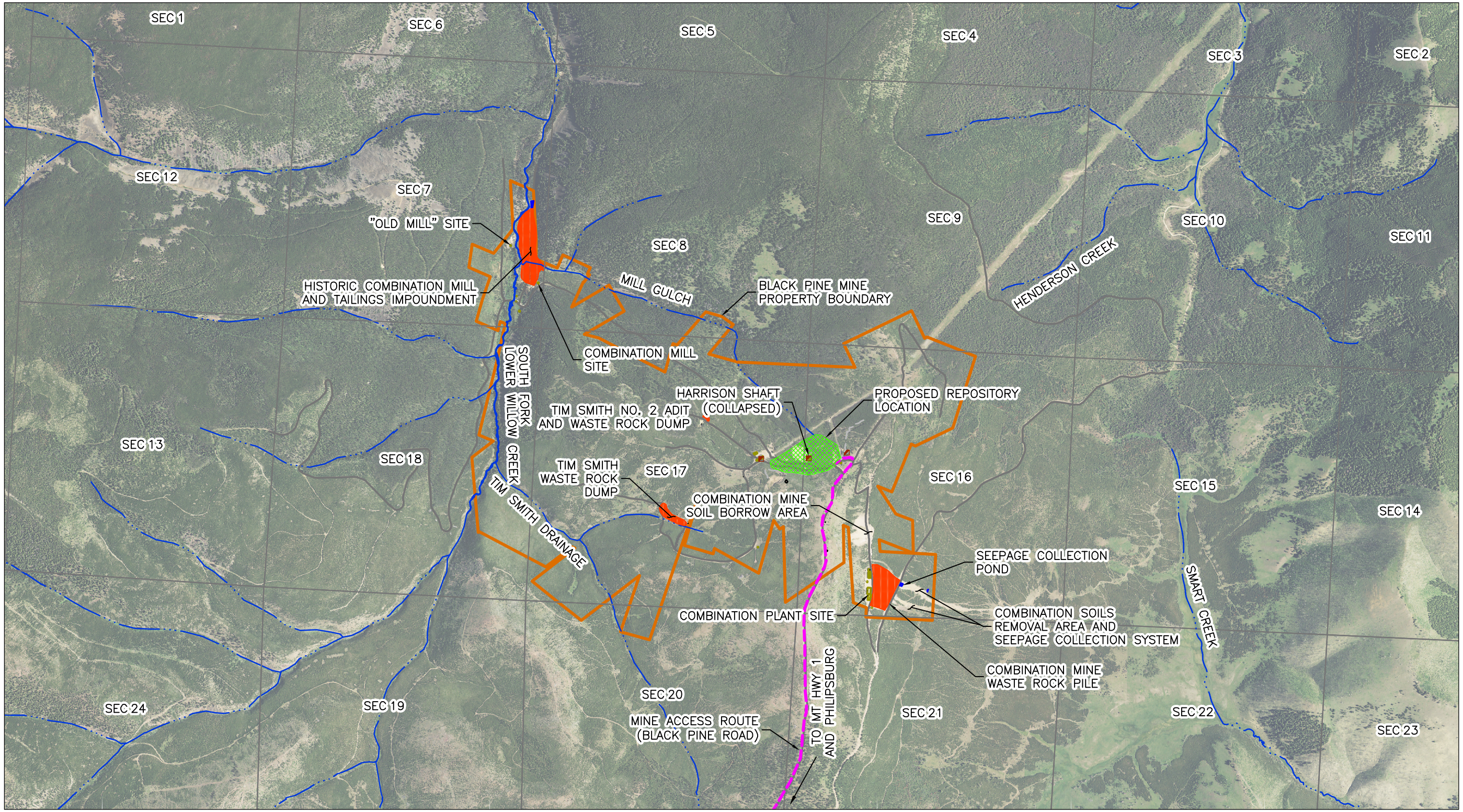

Basemap: USDA Farm Service Agency, Montana 2013 Color NAIP Orthophoto12-kM, Granite County. Published 2013.

NOTES:

1. IMAGERY WAS MOVED NORTHEAST TO MATCH FEATURES
2. PROVIDE TRAFFIC CONTROL AS NECESSARY TO MAINTAIN SAFE THROUGH FARE AND IN ACCORDANCE WITH THE CONTRACTOR'S TRAFFIC CONTROL PLAN
3. TREE TRIMMING MAY BE NECESSARY ON THE SITE ACCESS ROAD TO PROVIDE ACCESS FOR CONSTRUCTION EQUIPMENT
4. SALVAGE AND STOCKPILE TREES FOR PLACEMENT IN CHANNELS AND PLACEMENT ON FINISH GRADING

DRAFT

N

0 2,000'

HERRERA
101 East Broadway
Suite 610
Missoula, Montana 59802
www.herrerainc.com
(P) 406/721-4204 (F) 406/721-4232

REV.	DATE	DESCRIPTION	BY	CHK'D
0	5/2014	ISSUE FOR CLIENT REVIEW	REP	TH

REVISIONS

DRAWN BY: REP
CHECKED BY: TH
DATE: 5/2014
SCALE: 1" = 2000'
FILE: 776-SITEACCMAP

Trihydro CORPORATION
1252 Commerce Drive
Laramie, Wyoming 82070
www.trihydro.com
(P) 307/745.7474 (F) 307/745.7729

SITE ACCESS MAP

BLACK PINE MINE REPOSITORY
CONCEPTUAL DESIGN
FEDERAL SUPERFUND GROUP

SHEET 3 OF XX

REV: 0

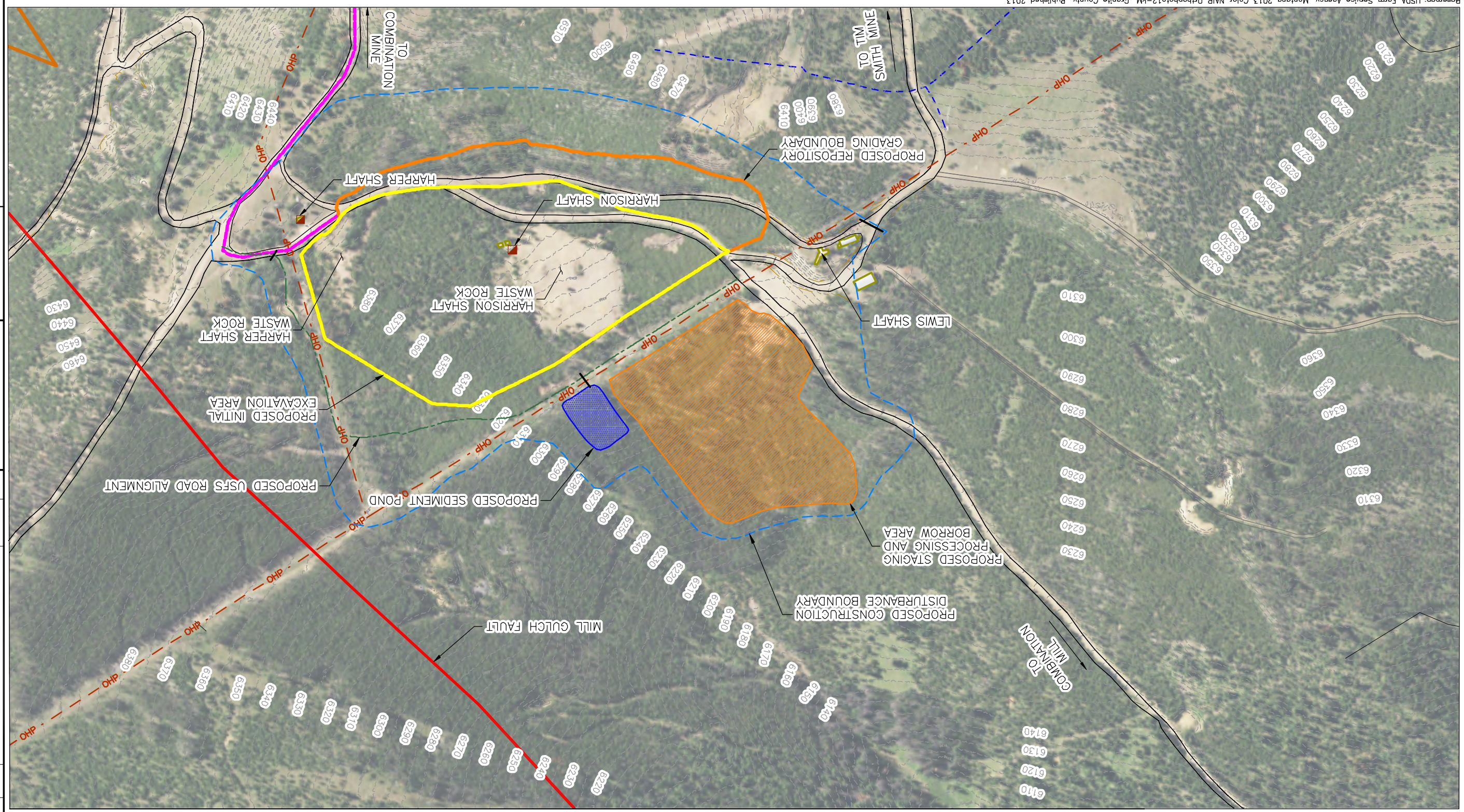

Basemap: USDA Farm Service Agency, Montana 2013 Color NAIP Orthophoto12-KM, Granite County. Published 2013.

NOTES:

1. THE PROPOSED STOCKPILE, PROCESSING, AND BORROW AREA LIES ADJACENT TO AN EPHEMERAL DRAINAGE. THE CONTRACTOR SHALL INSTALL STRAW WATTLES ACROSS THE EPHEMERAL DRAINAGES, PERPENDICULAR TO FLOW, DOWN STREAM OF THE PROPOSED STOCKPILE, STAGING AND PROCESSING AREA. FINAL LOCATIONS WILL BE APPROVED IN THE FIELD BY THE ENGINEER.
2. THE BLACK PINE REPOSITORY AREA IS LOCATED ON PUBLIC LANDS ADMINISTERED BY THE UNITED STATE FOREST SERVICE. NO WORK SHALL BE CONDUCTED OUTSIDE OF THE DISTURBANCE LIMITS SHOWN ON SHEETS 4-6 UNLESS PREVIOUSLY AUTHORIZED BY THE ENGINEER. EXCAVATION/INTRUSIVE ACTIVITIES SHALL BE LIMITED TO THE MINIMUM REQUIRED TO COMPLETE THE WORK AS DESCRIBED IN THE SPECIFICATIONS AND THESE DRAWINGS.

DRAFT

N

0 300'

HERRERA
101 East Broadway
Suite 610
Missoula, Montana 59802
www.herrerainc.com
(P) 406/721-4204 (F) 406/721-4232

REPOSITORY SITE LAYOUT

BLACK PINE MINE REPOSITORY
CONCEPTUAL DESIGN
FEDERAL SUPERFUND GROUP

Trihydro CORPORATION
1252 Commerce Drive
Laramie, Wyoming 82070
www.trihydro.com
(P) 307/745.7474 (F) 307/745.7729

SHEET 4
4 OF XX
REV: 0

DRAWN BY: REP
CHECKED BY: TH
DATE: 5/2014
SCALE: 1" = 300'
FILE: 776-REPSITELAY

REV.	DATE	DESCRIPTION	BY	CHK'D
0	5/2014	ISSUE FOR CLIENT REVIEW	REP	TH

REVISIONS

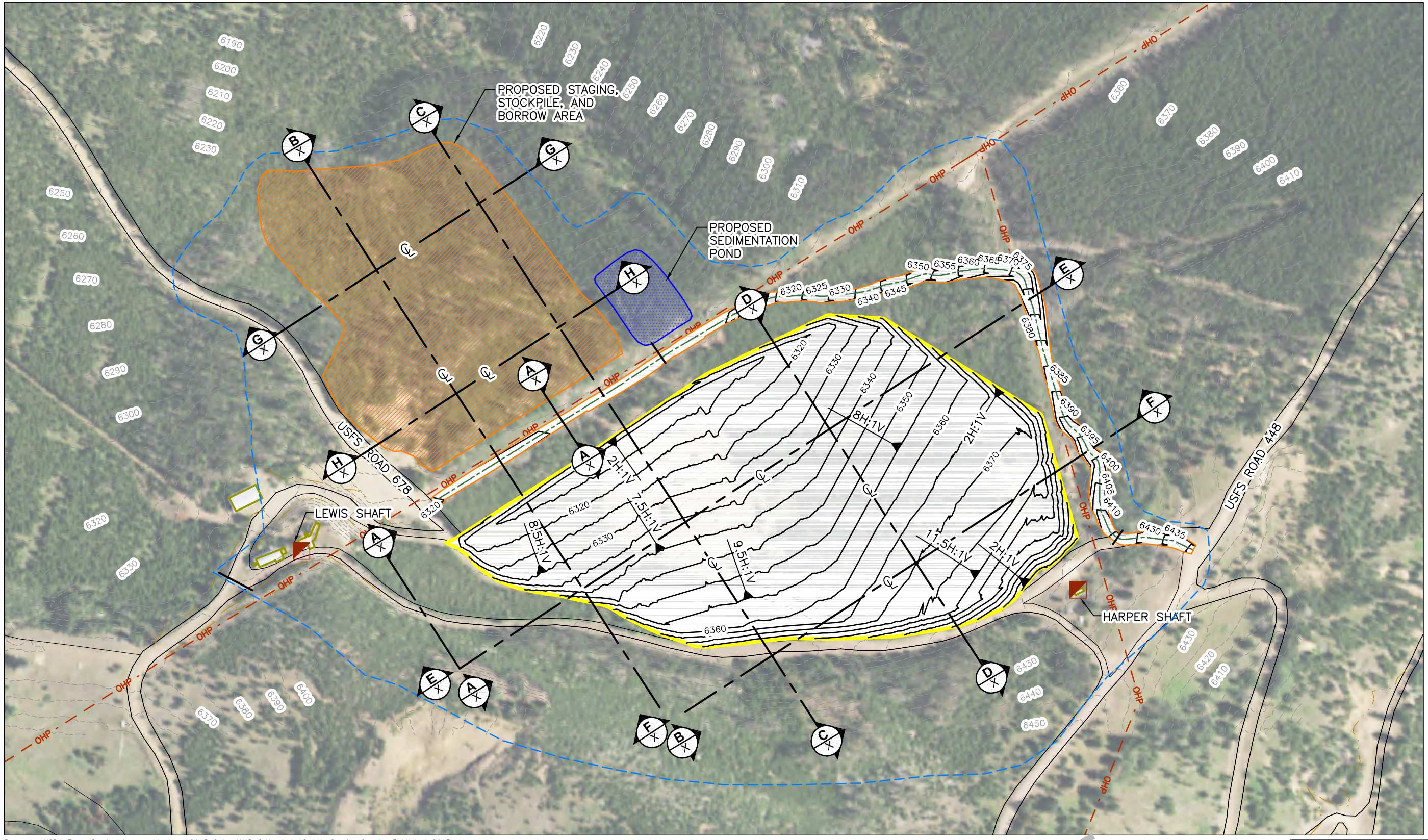

Basemap: USDA Farm Service Agency, Montana 2013 Color NAIP Orthophoto12-kM, Granite County. Published 2013.

NOTES:

1. IMAGERY WAS MOVED NORTHEAST TO MATCH FEATURES
2. THE REPOSITORY SHALL BE EXCAVATED APPROXIMATELY AS SHOWN ON THE CROSS-SECTIONS ON SHEETS 8-10. THE CONTRACTOR SHALL EXCAVATE SAFE WORKING SURFACES. THE CONTRACTOR SHALL MAINTAIN SAFE SLOPES DURING EXCAVATION ACTIVITIES.
3. PRIOR TO PLACING BACKFILL IN THE EXCAVATION AREAS, THE CONTRACTOR SHALL ALLOW FOR THE ENGINEER TO CONDUCT A SURVEY OF THE EXCAVATION.

DRAFT

N

0 200'

HERRERA
101 East Broadway
Suite 610
Missoula, Montana 59802
www.herrerainc.com
(P) 406/721-4204 (F) 406/721-4232

REV.	DATE	DESCRIPTION	BY	CHK'D
0	5/2014	ISSUE FOR CLIENT REVIEW	REP	TH

REVISIONS

DRAWN BY: REP
CHECKED BY: TH
DATE: 5/2014
SCALE: 1" = 200'
FILE: 776-GRADEEXIST

Trihydro CORPORATION
1252 Commerce Drive
Laramie, Wyoming 82070
www.trihydro.com
(P) 307/745.7474 (F) 307/745.7729

INITIAL EXCAVATION GRADING PLAN

BLACK PINE MINE REPOSITORY
CONCEPTUAL DESIGN
FEDERAL SUPERFUND GROUP

SHEET 5 5 OF XX

REV: 0

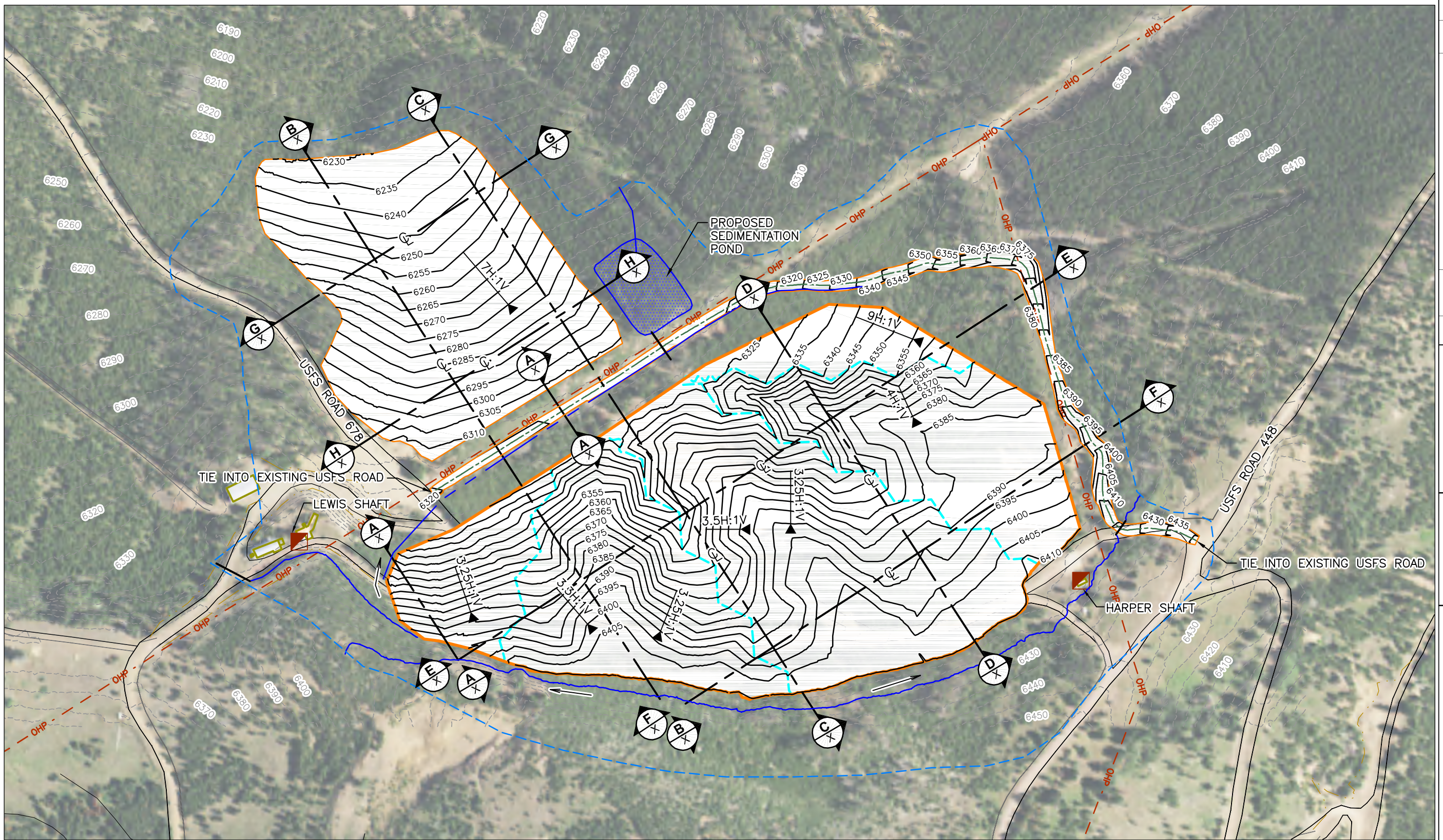

Basemap: USDA Farm Service Agency, Montana 2013 Color NAIP Orthophoto12-kM, Granite County. Published 2013.

NOTES:

1. IMAGERY WAS MOVED NORTHEAST TO MATCH FEATURES
2. THE PROCESSED WASTE MATERIAL SHALL BE REPLACED AS BACKFILL WITHIN THE EXCAVATED AREAS. STOCKPILED CLEAN OVERBURDEN MATERIAL SHALL BE PLACED AND COMPACTED TO FORM A 6-INCH BUFFER OVER WASTE MATERIAL WITHIN THE REPOSITORY. A 60-MIL HDPE LINER SHALL BE INSTALLED OVER THE 6-INCHES OF CLEAN BUFFER MATERIAL BETWEEN THE WASTE AND LINER. THE LINER SHALL BE COVERED WITH A CLEAN OVERBURDEN CAP, 3-FEET IN THICKNESS.
3. THE BACKFILL SHALL BE PLACED INTO THE REPOSITORY IN LIFTS NO THICKER THAN 8-INCHES AND COMPACTED THROUGH WHEEL ROLLING OF EQUIPMENT.
4. FINAL GRADING WILL BE AS APPROVED IN THE FIELD BY THE ENGINEER'S REPRESENTATIVE.
5. DISTURBED AREAS SHALL BE COVERED WITH AVAILABLE, SALVAGED COVERSOIL AND SEEDED. TREES SALVAGES FROM CLEARING AND GRUBBING ACTIVITIES SHALL BE SPREAD ACROSS THE PROPOSED GRADING AREA

DRAFT

N

0 200'

HERRERA
101 East Broadway
Suite 610
Missoula, Montana 59802
www.herrerainc.com
(P) 406/721-4204 (F) 406/721-4232

REV.	DATE	DESCRIPTION	BY	CHK'D
0	5/2014	ISSUE FOR CLIENT REVIEW	REP	TH

REVISIONS

DRAWN BY: REP
CHECKED BY: TH
DATE: 5/2014
SCALE: 1" = 200'
FILE: 776-GRADEPROP

Trihydro CORPORATION
1252 Commerce Drive
Laramie, Wyoming 82070
www.trihydro.com
(P) 307/745.7474 (F) 307/745.7729

PROPOSED SITE GRADING PLAN

BLACK PINE MINE REPOSITORY
CONCEPTUAL DESIGN
FEDERAL SUPERFUND GROUP

SHEET 6 OF XX

REV: 0

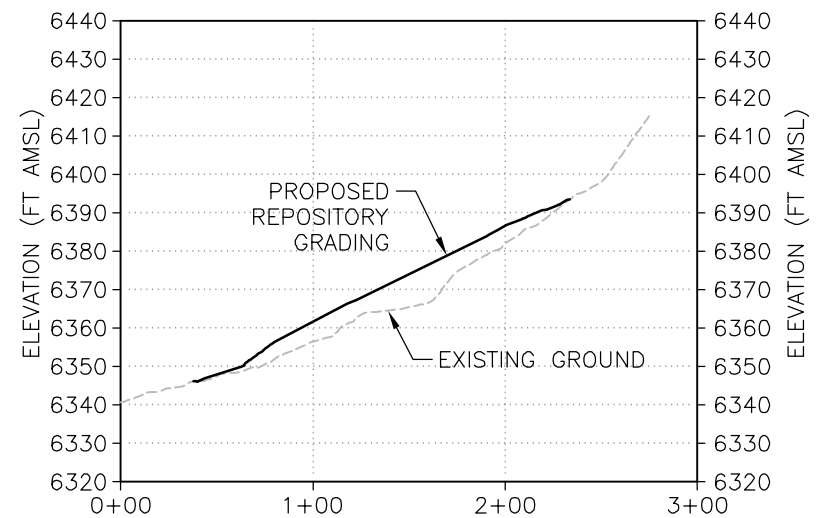

A CROSS-SECTION A-A'
SCALE: H: 1" = 100' V: 1" = 50'
0 100' HORIZONTAL
0 50' VERTICAL
VERTICAL EXAGGERATION = 2X

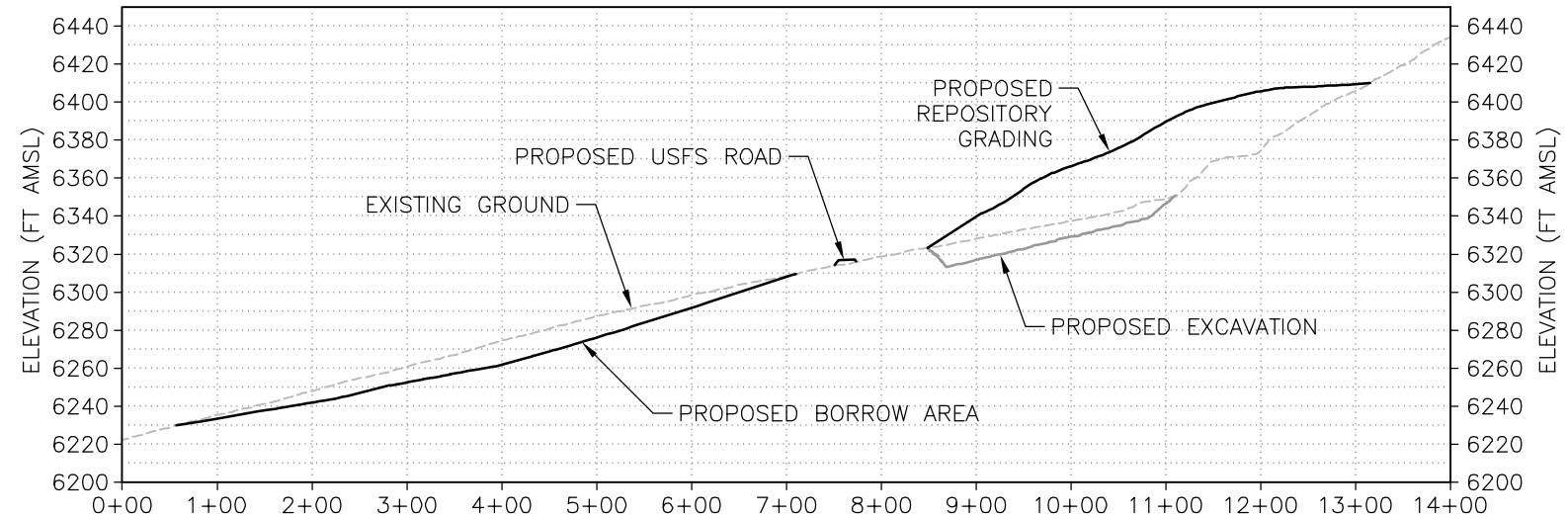

B CROSS-SECTION B-B'
SCALE: H: 1" = 200' V: 1" = 100'
0 200' HORIZONTAL
0 100' VERTICAL
VERTICAL EXAGGERATION = 2X

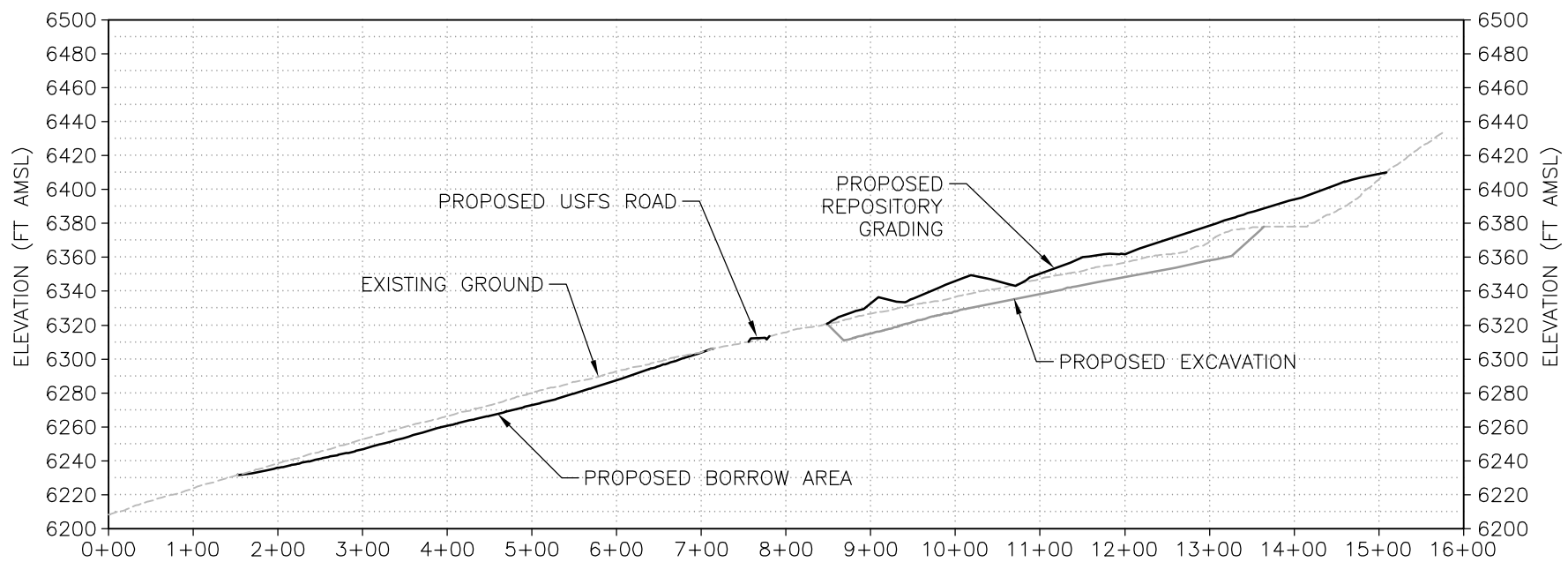

C CROSS-SECTION C-C'
SCALE: H: 1" = 200' V: 1" = 100'
0 200' HORIZONTAL
0 100' VERTICAL
VERTICAL EXAGGERATION = 2X

DRAFT

HERRERA
101 East Broadway
Suite 610
Missoula, Montana 59802
www.herreralnc.com
(P) 406/721-4204 (F) 406/721-4232

REV.	DATE	DESCRIPTION	BY	CHK'D
0	5/2014	ISSUE FOR CLIENT REVIEW	REP	TH

REVISIONS

DRAWN BY: REP
CHECKED BY: TH
DATE: 5/2014
SCALE: AS SHOWN
FILE: 776-XSECTIONS

Trihydro CORPORATION
1252 Commerce Drive
Laramie, Wyoming 82070
www.trihydro.com
(P) 307/745.7474 (F) 307/745.7729

EARTHWORK CROSS-SECTIONS (SHEET 1 OF 3)

BLACK PINE MINE REPOSITORY
CONCEPTUAL DESIGN
FEDERAL SUPERFUND GROUP

SHEET 7 OF XX
REV: 0

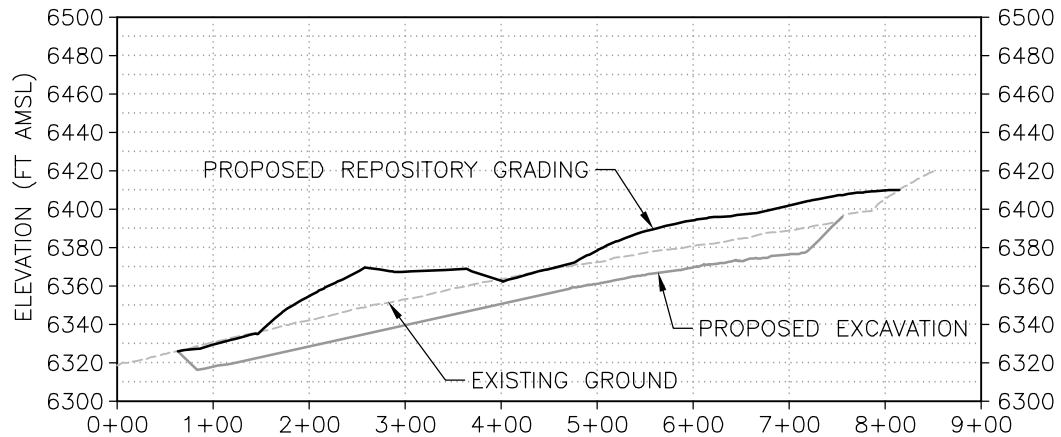

D **CROSS-SECTION D-D'**
SCALE: H: 1" = 200' V: 1" = 100'

0 200' 0 100'
HORIZONTAL VERTICAL
VERTICAL EXAGGERATION = 2X

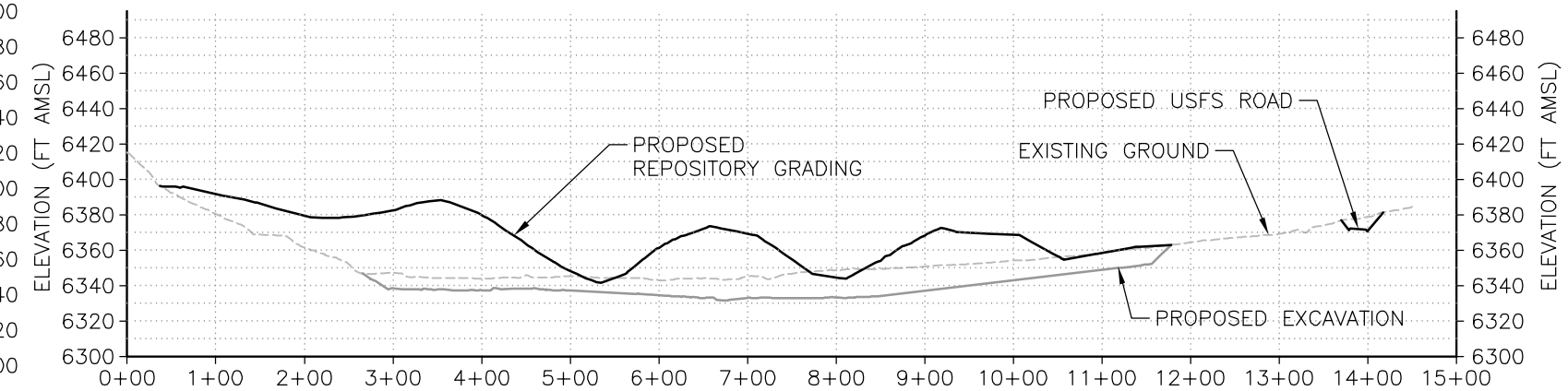

E **CROSS-SECTION E-E'**
SCALE: H: 1" = 200' V: 1" = 100'

0 200' 0 100'
HORIZONTAL VERTICAL
VERTICAL EXAGGERATION = 2X

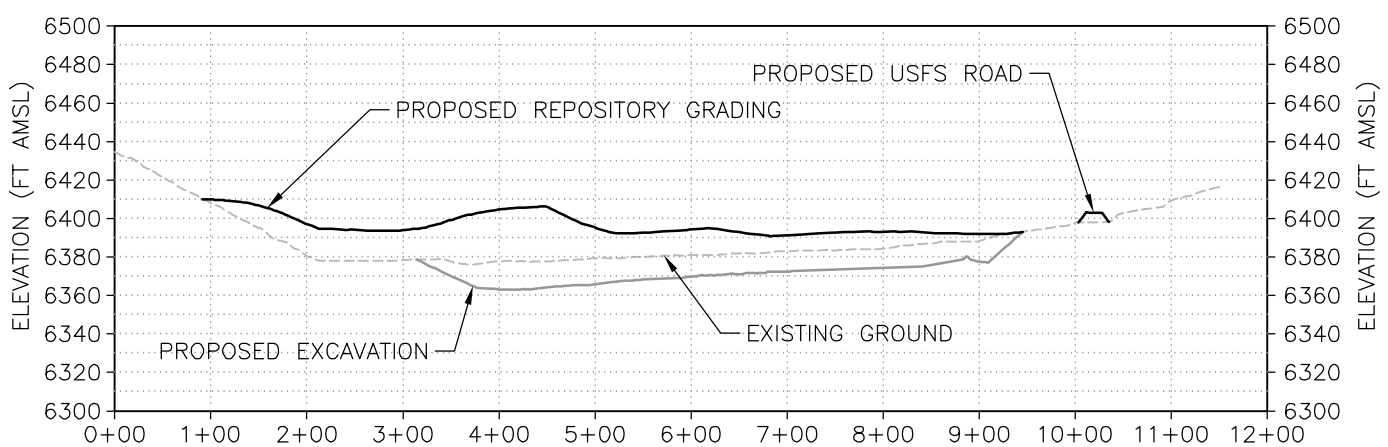

F **CROSS-SECTION F-F'**
SCALE: H: 1" = 200' V: 1" = 100'

0 200' 0 100'
HORIZONTAL VERTICAL
VERTICAL EXAGGERATION = 2X

DRAFT

HERRERA
101 East Broadway
Suite 610
Missoula, Montana 59802
www.herreralnc.com
(P) 406/721-4204 (F) 406/721-4232

REV.	DATE	DESCRIPTION	BY	CHK'D
0	5/2014	ISSUE FOR CLIENT REVIEW	REP	TH

REVISIONS

DRAWN BY: REP
CHECKED BY: TH
DATE: 5/2014
SCALE: AS SHOWN
FILE: 776-XSECTIONS

Trihydro CORPORATION
1252 Commerce Drive
Laramie, Wyoming 82070
www.trihydro.com
(P) 307/745.7474 (F) 307/745.7729

EARTHWORK CROSS-SECTIONS (SHEET 2 OF 3)

BLACK PINE MINE REPOSITORY
CONCEPTUAL DESIGN
FEDERAL SUPERFUND GROUP

SHEET **8** 8 OF XX
REV: 0

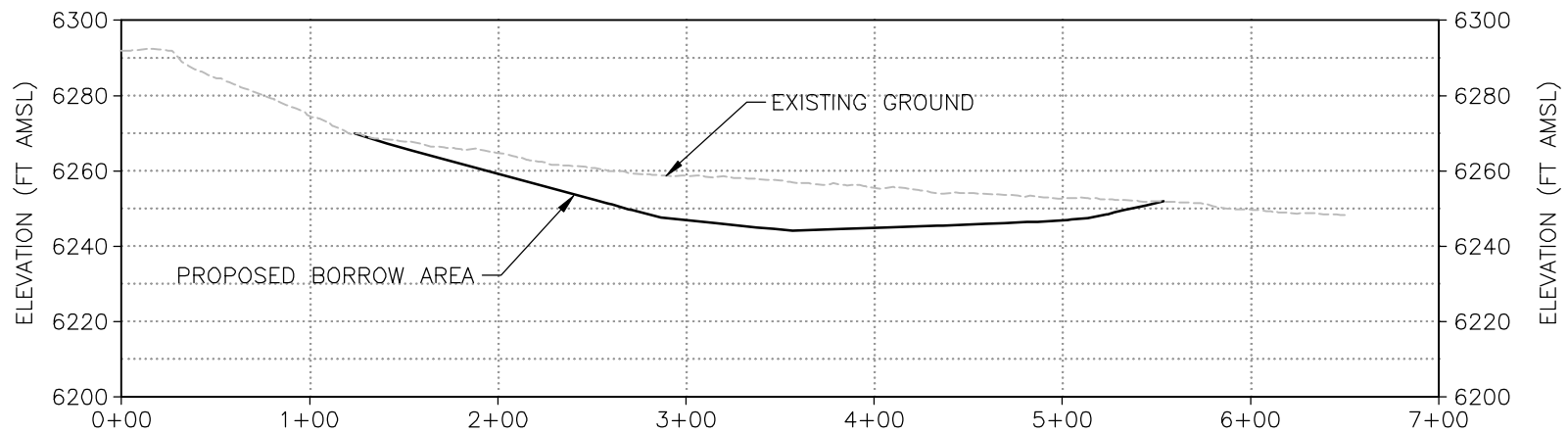

G **CROSS-SECTION G-G'**
SCALE: H: 1" = 100' V: 1" = 50'

0 100' HORIZONTAL
0 50' VERTICAL
VERTICAL EXAGGERATION = 2X

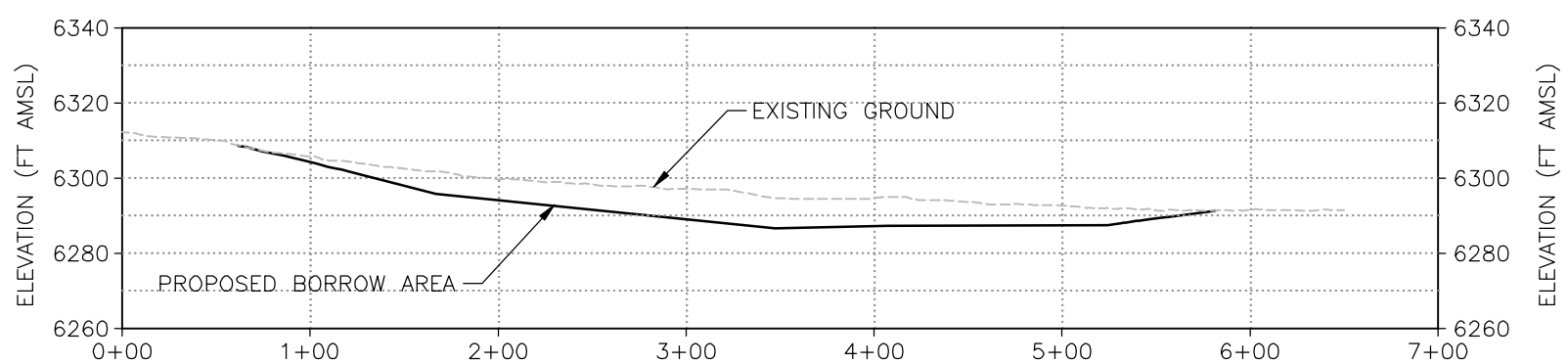

H **CROSS-SECTION H-H'**
SCALE: H: 1" = 100' V: 1" = 50'

0 100' HORIZONTAL
0 50' VERTICAL
VERTICAL EXAGGERATION = 2X

DRAFT

HERRERA
101 East Broadway
Suite 610
Missoula, Montana 59802
www.herrerainc.com
(P) 406/721-4204 (F) 406/721-4232

REV.	DATE	DESCRIPTION	BY	CHK'D
0	5/2014	ISSUE FOR CLIENT REVIEW	REP	TH

REVISIONS

DRAWN BY: REP
CHECKED BY: TH
DATE: 5/2014
SCALE: AS SHOWN
FILE: 776-XSECTIONS

Trihydro CORPORATION
1252 Commerce Drive
Laramie, Wyoming 82070
www.trihydro.com
(P) 307/745.7474 (F) 307/745.7729

EARTHWORK CROSS-SECTIONS (SHEET 3 OF 3)

BLACK PINE MINE REPOSITORY
CONCEPTUAL DESIGN
FEDERAL SUPERFUND GROUP

SHEET **9**
9 OF XX
REV: **0**

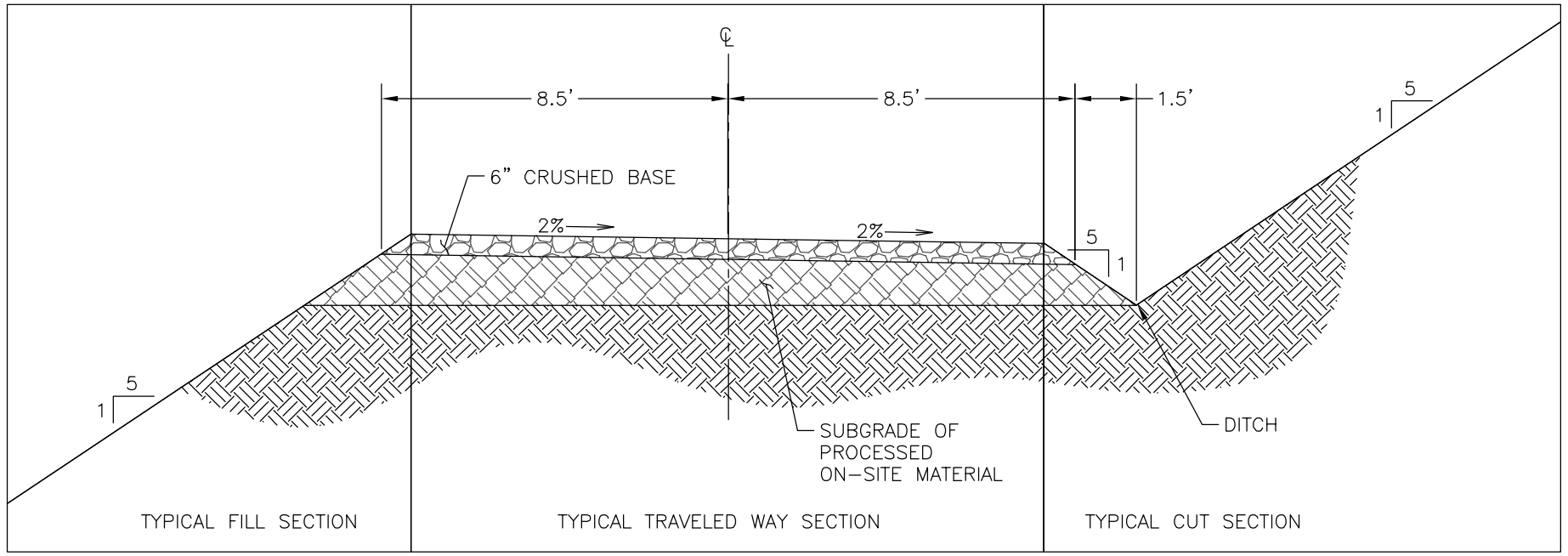

A **USFS ROAD TYPICAL CROSS SECTION**
SCALE: 1" = 4'

0 4'

NOTES:

1. BLADE ROAD PRIOR TO PLACING GRAVEL TO MAINTAIN DRAINAGE TO EXISTING DITCHES.
2. ADD TURNOUTS IN ACCORDANCE WITH THE CONTRACTORS TRAVEL PLAN.
3. WIDTH VARIES, MINIMUM WIDTH 16 FEET OR AS APPROVED BY ENGINEER.
4. LOCALIZED TREE-TRIMMING MAY BE NECESSARY FOR CONSTRUCTION EQUIPMENT ACCESS.
5. ROAD IMPROVEMENTS/CONSTRUCTION SHALL COMPLY WITH THE USFS SPECIFICATION IN THE SPECIAL PROVISIONS.

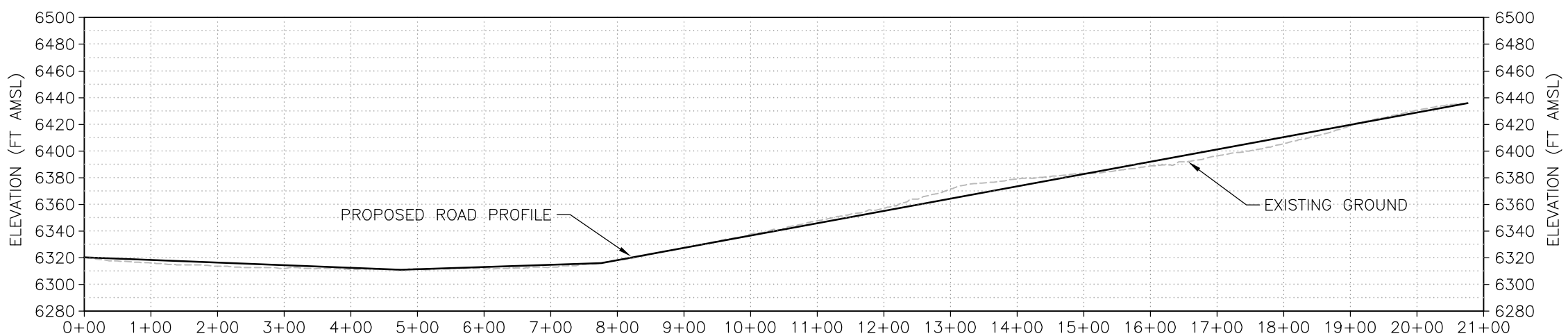

B **USFS ROAD PROFILE**
SCALE: H: 1" = 200' V: 1" = 100'

0 200' HORIZONTAL
0 100' VERTICAL
VERTICAL EXAGGERATION = 2X

DRAFT

REV.	DATE	DESCRIPTION	BY	CHK'D
0	5/2014	ISSUE FOR CLIENT REVIEW	REP	TH

REVISIONS

DRAWN BY: REP
CHECKED BY: TH
DATE: 5/2014
SCALE: AS SHOWN
FILE: 776-DETAILS

Trihydro CORPORATION
1252 Commerce Drive
Laramie, Wyoming 82070
www.trihydro.com
(P) 307.745.7474 (F) 307.745.7729

USFS ROAD TYPICAL CROSS-SECTION AND PROFILE (2 OF X)

BLACK PINE MINE REPOSITORY CONCEPTUAL DESIGN FEDERAL SUPERFUND GROUP

SHEET **10** 10 OF XX

REV: 0

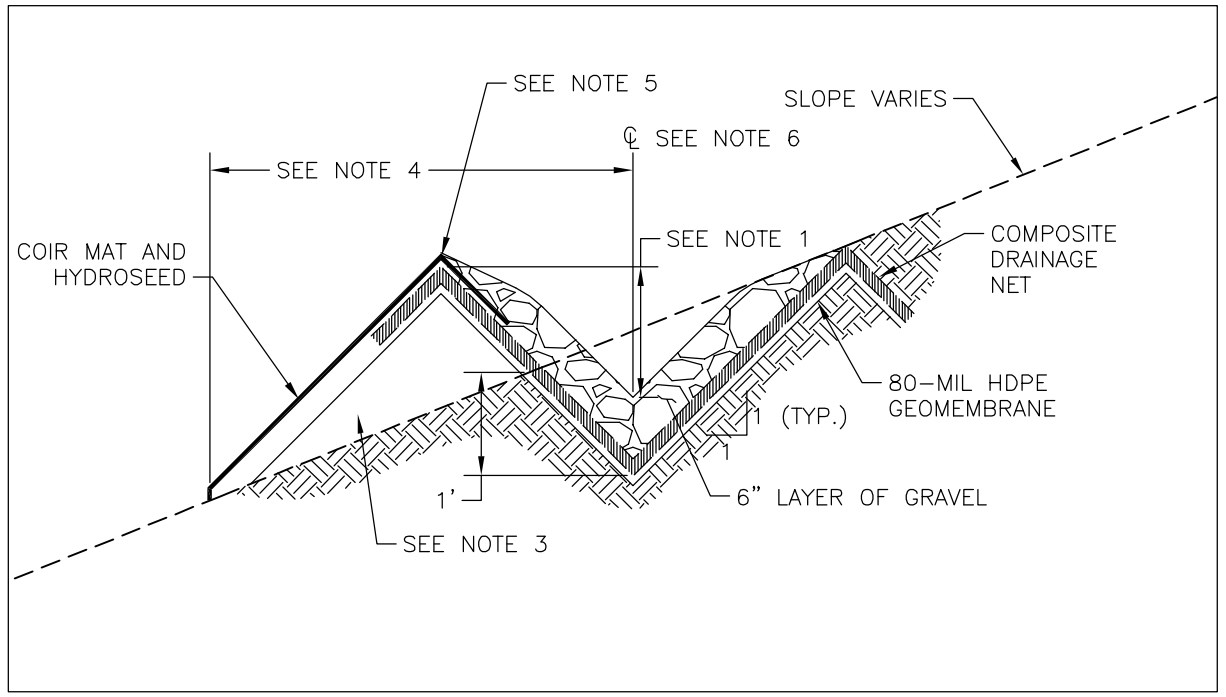

A **SECTION - SURFACE WATER DIVERSION DITCH**
SCALE: NONE

NOTES:

1. MINIMUM DITCH DEPTH 18 INCHES FROM TOP OF GRAVEL
2. CUT DITCH 1 FOOT DEEP INTO EXISTING SLOPES WITH 1H;1V SIDE SLOPES
3. CONSTRUCT BERM WITH SPOILS FROM DITCH EXCAVATION
4. LOCATE DITCH CENTERLINE A MINIMUM OF 5 FEET FROM EDGE OF REPOSITORY COVER EXTENTS
5. OVERLAP GEOTEXTILE AND COIR MAT A MINIMUM OF 1 FOOT ON EITHER SIDE OF BERM CREST
6. MINIMUM DITCH SLOPE SHALL BE NO LESS THAN 2%

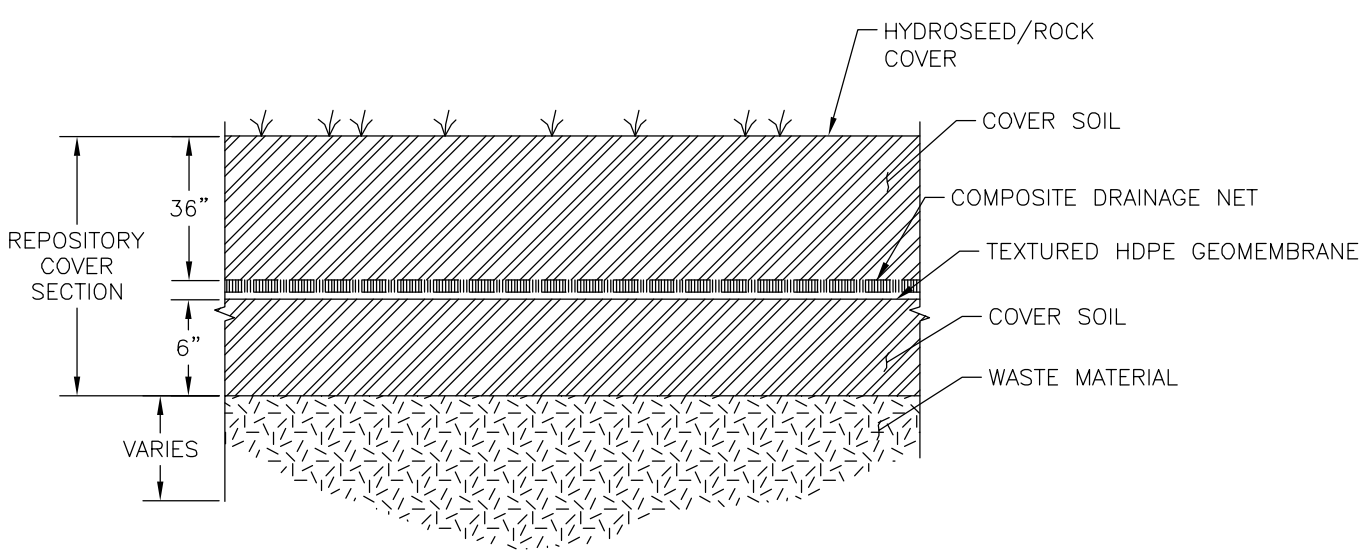

B **REPOSITORY COVER SECTION**
SCALE: NONE

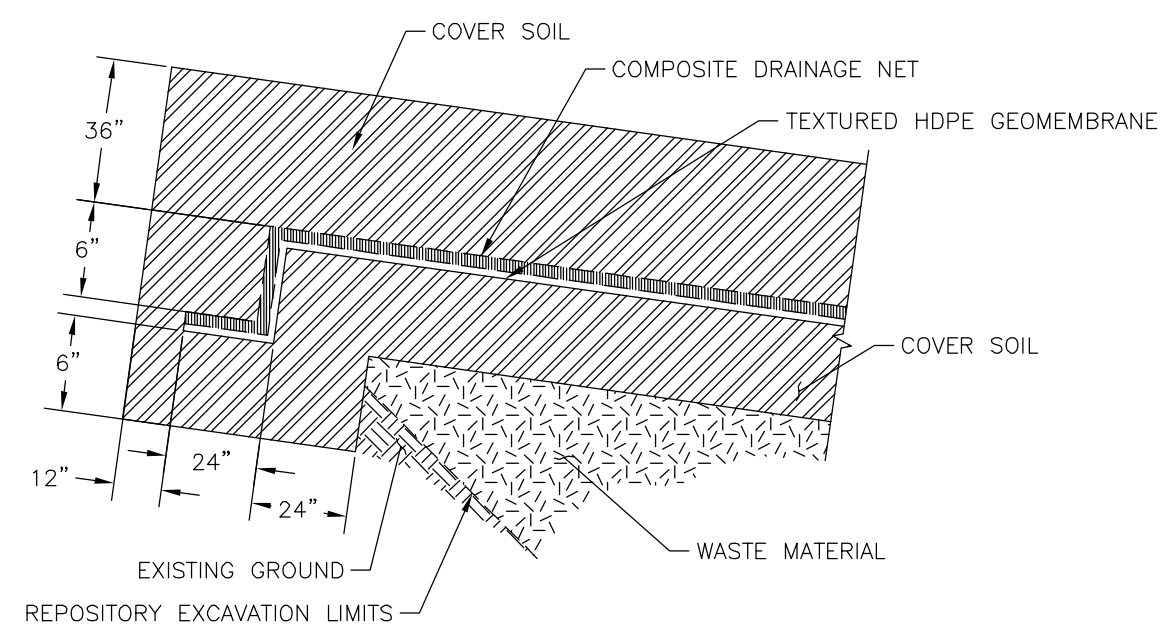

C **REPOSITORY COVER ANCHOR TRENCH**
SCALE: NONE

DRAFT

REV.	DATE	DESCRIPTION	BY	CHK'D
0	5/2014	ISSUE FOR CLIENT REVIEW	REP	TH

REVISIONS

DRAWN BY: REP
CHECKED BY: TH
DATE: 5/2014
SCALE: NONE
FILE: 776-DETAILS

Trihydro CORPORATION
1252 Commerce Drive
Laramie, Wyoming 82070
www.trihydro.com
(P) 307.745.7474 (F) 307.745.7729

GENERAL CONSTRUCTION DETAILS (1 OF X)

BLACK PINE MINE REPOSITORY CONCEPTUAL DESIGN FEDERAL SUPERFUND GROUP

SHEET **11**
11 OF XX
REV: 0

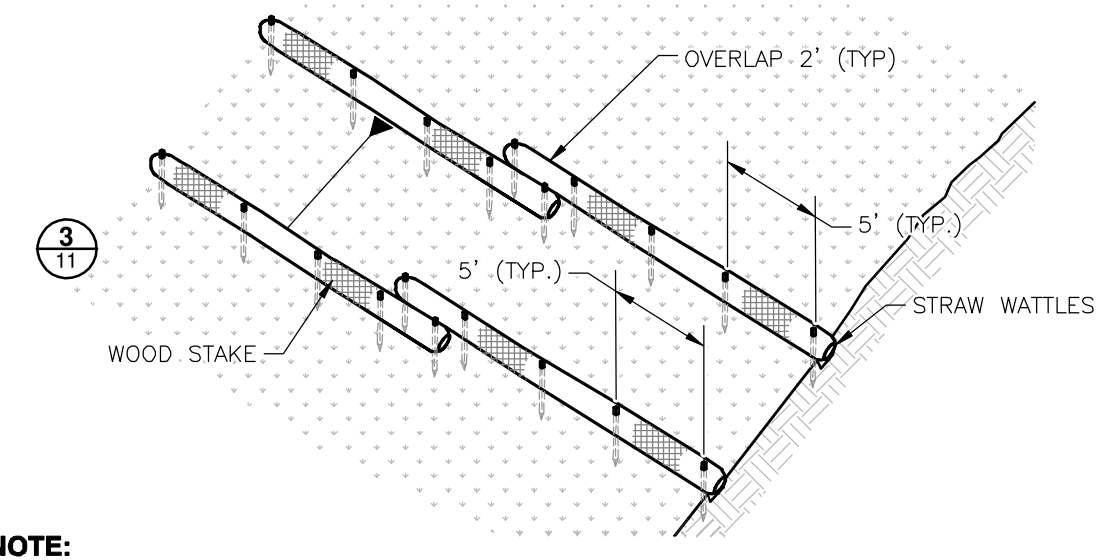

NOTE:
STRAW WATTLE DETAILS SHOWN FOR PLANNING PURPOSES. CONSTRUCTION SHALL BE IN ACCORDANCE WITH MANUFACTURER RECOMMENDATIONS.

1 STRAW WATTLE DETAILS
SCALE: NONE

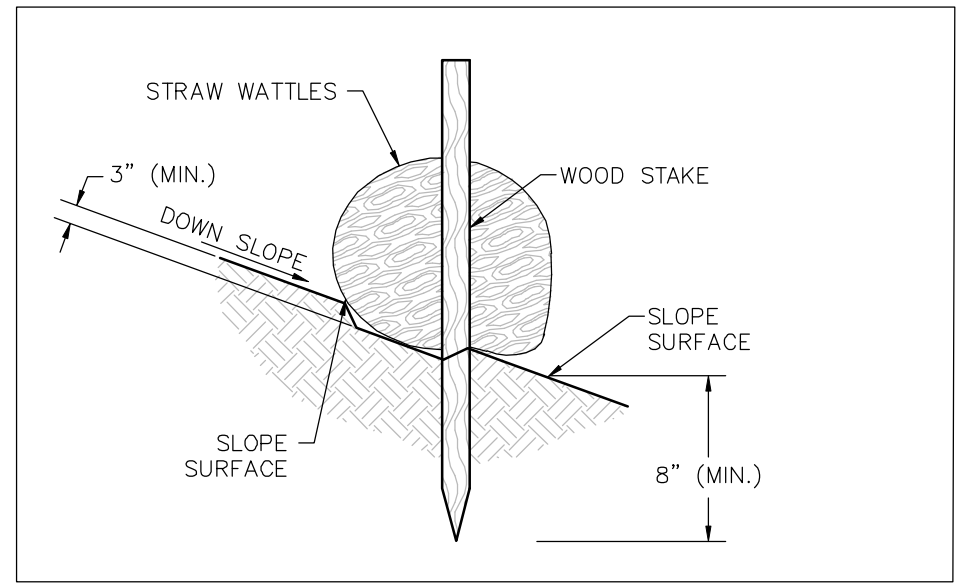

Source: North American Green, Evansville, IN, 2006

2 STAKE DETAILS
SCALE: NONE

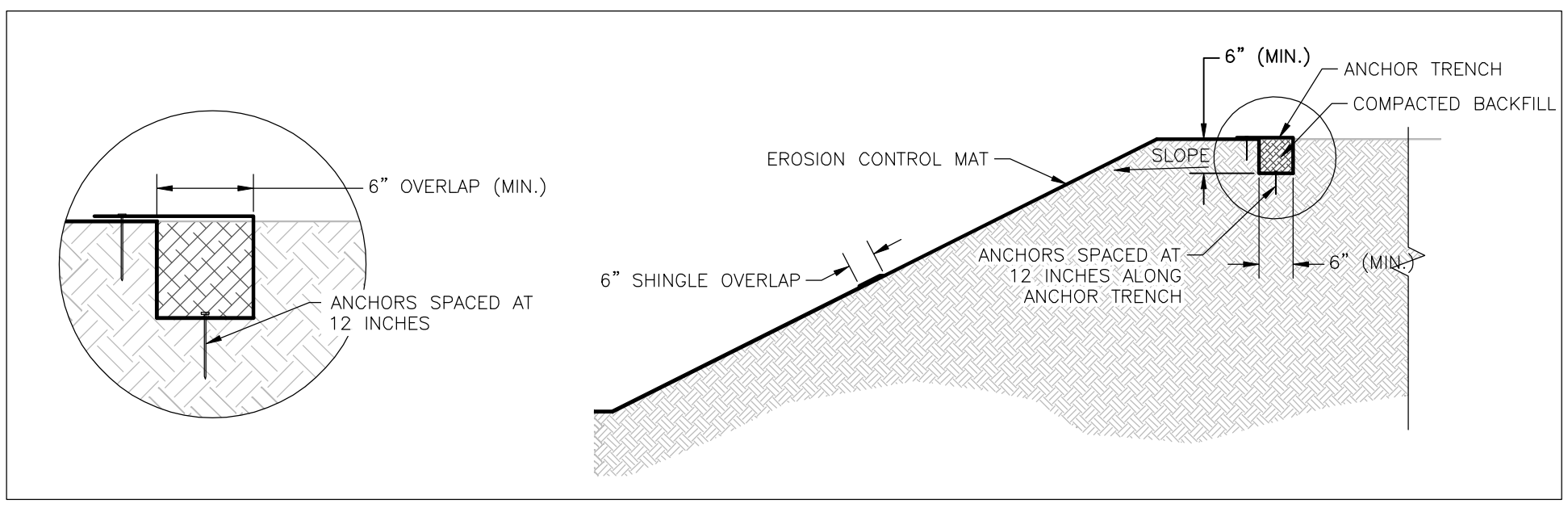

3 EROSION CONTROL MAT AND ANCHOR TRENCH
SCALE: NONE

DRAFT

NOTES:

1. EROSION CONTROL MAT SHALL BE ANCHORED AT THE TOP OF THE SLOPE IN A 6-INCH BY 6-INCH ANCHOR TRENCH. WITH A ROW OF STAPLES ON 12-INCH SPACING. THE BLANKET SHALL BE WRAPPED BACK OVER THE ANCHOR TRENCH AND EXTENDED TOWARD THE SLOPE 6 INCHES. STAPLES SHALL BE INSTALLED IN THE OVERLAP AT A SPACING OF 12 INCHES.
2. EROSION CONTROL MAT DETAIL SHOWN FOR PLANNING PURPOSES. CONSTRUCTION, INCLUDING STAPLE/ANCHOR SPACING SHALL BE IN ACCORDANCE WITH MANUFACTURER RECOMMENDATIONS FOR THE INTENDED APPLICATION.

REV.	DATE	DESCRIPTION	BY	CHK'D
0	5/2014	ISSUE FOR CLIENT REVIEW	REP	TH

REVISIONS

DRAWN BY: REP
CHECKED BY: TH
DATE: 5/2014
SCALE: NONE
FILE: 776-DETAILS

Trihydro CORPORATION
1252 Commerce Drive
Laramie, Wyoming 82070
www.trihydro.com
(P) 307/745.7474 (F) 307/745.7729

GENERAL CONSTRUCTION DETAILS
(2 OF 2)

BLACK PINE MINE REPOSITORY
CONCEPTUAL DESIGN
FEDERAL SUPERFUND GROUP

SHEET 12
12 OF XX
REV: 0