SAND COULEE WATER SYSTEM REPLACEMENT PROJECT
CASCADE COUNTY, MONTANA

CONSTRUCTION COMPLETION REPORT

FOR STATE OF MONTANA
DEPARTMENT OF ENVIRONMENTAL QUALITY –
REMEDIATION DIVISION, ABANDONED MINE LANDS

DEQ Contract No.: 414006

Prepared for:

Mr. Tom Henderson
Montana Department of Environmental Quality
Remediation Division – Abandoned Mine Lands
1225 Cedar Street
P.O. Box 200901
Helena, Montana 59620

Prepared by:

NCI Engineering
PO Box 6350
Great Falls, MT 59405

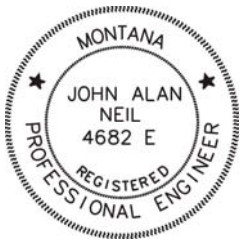

September 30, 2017

TABLE OF CONTENTS

1.0 INTRODUCTION 1

1.1 GENERAL PROJECT DESCRIPTION 1

2.0 RESPONSIBLE PARTIES 3

2.1 SAND COULEE WATER DISTRICT 3

2.2 MONTANA DEPARTMENT OF ENVIRONMENTAL QUALITY/REMEDIATION DIVISION – ABANDONED MINE LANDS 3

2.3 ED BOLAND CONSTRUCTION, INC. 4

2.4 PAT BYRNE DRILLING, INC. 4

2.5 HYDROMETRICS INC. 4

2.6 NCI ENGINEERING 4

2.7 CONSTRUCTION MONITORING AND QUALITY ASSURANCE 5

3.0 CHRONOLOGICAL LISTING OF EVENTS 6

3.1 WATER DISTRIBUTION SYSTEM PROJECT 6

3.1.1 Pre-Bid Conference 6

3.1.2 Bid Date 6

3.1.3 Bid Opening 6

3.1.4 Contract Award 6

3.1.5 Contract Agreement 6

3.1.6 Construction Start-Up 6

3.1.7 Contract Time 7

3.1.8 Project Submittals 7

3.1.9 Construction Overview 7

3.1.10 Work Directive Changes 8

3.1.11 Change Orders 8

3.1.11.1 Change Order #1 8

3.1.11.2 Change Order #2 9

3.1.11.3 Change Order #3 9

3.1.12 Work Stoppages 11

3.1.13 Weather Days 11

3.1.14 Requests for Payment 11

3.2 WELL #6 PUMP AND VFD INSTALLATION PROJECT 12
3.2.1 Bid Date 12
3.2.2 Bid Opening 12
3.2.3 Contract Award 12
3.2.4 Contract Agreement 12
3.2.5 Construction Overview 12
4.0 CONSTRUCTION 13
4.1 WATER DISTRIBUTION SYSTEM PROJECT 13
4.1.1 Contractor Employees 13
4.1.2 Subcontractors 13
4.1.3 Major suppliers 14
4.1.4 Construction Activities 14
4.1.4.1 Project Oversight 14
4.1.4.2 Quality Assurance 15
4.1.4.3 Weekly Progress Meetings 15
4.1.4.4 Construction Photographs 15
4.2 WELL #6 PUMP AND VFD INSTALLATION PROJECT 16
4.2.1 Contractor Employees 16
4.2.2 Subcontractors 16
4.2.3 Construction Activities 16
4.2.3.1 Project Oversight 16
4.2.3.2 Well Disinfection 16
5.0 QUANTITIES USED 17
5.1 PROJECT SUMMARY 17
6.0 TOTAL PROJECT COSTS 18
7.0 POST CONSTRUCTION 19
7.1 MAINTENANCE OR FOLLOW-UP 19
7.2 AS-RECORDED DRAWINGS 20
7.3 OTHER O&M DOCUMENTS 20
7.4 WARRANTIES AND PERMITS 20

LIST OF TABLES

TABLE 3-1. WORK DIRECTIVE CHANGES SUMMARY 8

TABLE 3-2. PAY REQUEST SUMMARY.....11

TABLE 6-1. ANALYSIS OF ENGINEERING AND CONSTRUCTION COSTS 18

LIST OF APPENDICES

APPENDIX A PROJECT CORRESPONDENCE

- A-1 Prebid Attendance and Agenda
- A-2 Bid Results-Water Distribution System Project
- A-3 Award, Agreement, Notice to Proceed
- A-4 Preconstruction Meeting Minutes
- A-5 Project Submittals
- A-6 Work Directives #1, #2, and #3
- A-7 Bid Results – Well #6 Pump and VFD Installation Project
- A-8 Award, Agreement, Notice to Proceed

APPENDIX B CONSTRUCTION

- B-1 Daily Inspection Report
- B-2 Quality Sampling and Testing
- B-3 Weekly Construction Progress Meetings
- B-4 Construction Photos
- B-5 Reconciliation of Quantities
- B-6 Water Tank Leakage Report
- B-7 Water Distribution System As-Recorded Drawings
- B-8 Warranties and Permits (separate document)
- B-9 Well #6 and VFD Installation As-Recorded Drawings
- B-10 Well Disinfection Report

1.0 INTRODUCTION

This construction completion report (CCR) for the Sand Coulee Water System Replacement Project (Site) documents the construction activities completed from August 18, 2014 to October 14, 2015, and depicts the final as-built conditions at the Site at the completion of the project. In addition, the CCR documents work performed in 2017 to connect Well #6 to the water distribution system. The CCR is posted at the following internet address: http://deq.mt.gov/Land/abandonedmines

1.1 GENERAL PROJECT DESCRIPTION

The town of Sand Coulee is a small unincorporated residential community of approximately 180 people. Sand Coulee, a drainage beginning in the foothills of the Little Belt Mountains, is located in Cascade County, Montana. The town site is approximately eight miles southeast of Great Falls. Historically the area experienced extensive coal mining activities during the early 20th century. Past mining activities have negatively impacted the town's water source and water system infrastructure. The abandoned mines have partially dewatered the Kootenai Formation which has been the source for the community's public water supply. While the community had experienced recurring water shortages, options for new water supplies have been limited by the impacts of the coal mining activities. Acid mine drainage had contaminated surface water and shallow groundwater in the area. In addition, the existing water distribution system was installed in areas filled with coal waste remaining from the mining operations. Based on these conditions, the Montana Department of Environmental Quality Abandoned Mine Lands Program (DEQ-AML) worked with the Sand Coulee Water District (Water District) to develop a reliable source of potable water with new wells and eliminated exposure to coal wastes in the water distribution system.

The Madison aquifer was identified as the best candidate for a new source of potable water for the community (Hydrometrics, 2011). The DEQ Public Water Supply Division (DEQ-PWS) approved construction of Water District Well 5 in the Madison aquifer on September 23, 2011 and approved the well discharge piping on July 16, 2012. A Groundwater Certificate for 35 gallons per minute/10 acre-ft was issued for Well 5 and the well was put into service on August 31, 2012. The Water District then submitted a Beneficial Water Use Permit application for an additional 48 acre-feet of groundwater from the Madison aquifer on May 16, 2013. Upon receipt of the approved Beneficial Water Use Permit and new Water Rights for the Water District, a new pump rated at 156 gallons per minute was installed in Well 5 on May 28, 2015. Construction and testing of Well #5 and the connection of Well #5 to the water distribution system is documented in the Sand Coulee Water District Public Water Supply Well Installation Final Report (Hydrometrics, 2012). This report is available at the internet address provided above.

With a reliable primary potable water source available to the town of Sand Coulee, a water improvements project was developed to replace the deteriorated water distribution system and storage tank with a system meeting current DEQ water system standards. The existing 4" distribution piping consistently failed due to fragile plastic piping which allowed granular coal/coal slack materials to be introduced into the water system. District maintenance personnel reported the number of failures was extensive and was occurring throughout the entire 4"

distribution system piping. Compounding the coal/coal slack entry problem there was no means of flushing the distribution system to remove settled deposits of coal/coal slack. Furthermore, the existing system was not configured properly and there was an insufficient number of fire hydrants to meet Fire Code Standards.

The source of the granular coal within the distribution system appears to be attributable to the use of these materials as backfill during the installation of the distribution system. It was not uncommon for the coal materials to plug service connections or come through faucets in many Sand Coulee residences. As a result, many residences had been forced to install filters to remove suspended granular coal/coal slack and incur water pressure problems at faucets. The accumulated granular coal present in the existing water distribution system would potentially lead to health concerns for the community.

Following the construction and connection of Well 5 in August 2012, Wells 4 and 5 were used as sources of potable water for the community, with Well 5 being utilized as the primary well and Well 4 being utilized as a backup well. Well 4 remained in service as backup well for the Water District until June 12, 2017 when Well 6 was completed and brought online. Well 6 was completed in the Madison aquifer by the DEQ AML program to serve as a backup well for the Water District. Now that Well 6 is online and functioning as the backup well, it is anticipated that Well 4 will be abandoned by the Water District.

2.0 RESPONSIBLE PARTIES

2.1 SAND COULEE WATER DISTRICT

The Sand Coulee Water District is the operator of the Public Water Supply system. Sand Coulee is an unincorporated community, organized under the laws of the State of Montana. Management of the Water District is the responsibility of the Board of Directors, as authorized under Title7, Chapter 13, Parts 22 and 23. The Water District is primarily responsible for meeting the requirements of the Montana Water Quality Act. Members of the current Water District Board and staff are as follows:

Kent Luoma, President
Pat Darko, Board member
Mike Waldner, Board member
Kelly Luoma, Bookkeeper
Mary Ann Freeman, Secretary

Address:
Sand Coulee Water District
P.O. Box 97
Sand Coulee, MT 59472

2.2 MONTANA DEPARTMENT OF ENVIRONMENTAL QUALITY/REMEDIATION DIVISION – ABANDONED MINE LANDS

The DEQ/AML Project Manager, Tom Henderson, Reclamation Specialist, coordinated the project planning phases, provided technical and regulatory review during the design process, developed the construction bid package and bidding processes, provided oversight, and coordinated implementing the construction project. Project Manager's address and telephone number:

Mr. Tom Henderson
Montana Department of Environmental Quality
Remediation Division – Abandoned Mine Lands
1225 Cedar Street
P.O. Box 200901
Helena, Montana 59620
Telephone: 406-444-6492

2.3 ED BOLAND CONSTRUCTION, INC.

The Contractor for the water distribution project was Ed Boland Construction, Inc. (Boland). Contractor's address and telephone number:

Ed Boland Construction Inc.
4701 North Star Blvd.
Great Falls, Montana 59405
Telephone: 406-761-1063

Mr. Barry Boland served as Boland's Project Manager and Mr. Steve Carlson served as Boland's Project Superintendent.

2.4 PAT BYRNE DRILLING, INC.

The Contractor for the installation of the pump and VFD for Well #6 and the connection of Well 6 to the water distribution system was Pat Byrne Drilling Inc.
Contractor's address and telephone number.

Pat Byrne Drilling, Inc.
245 Gerber Road
Great Falls, Montana, 59405
Telephone: 406-727-3381

2.5 HYDROMETRICS INC.

Hydrometrics, under contract with DEQ/AML, provided engineering oversight for the water distribution project and oversaw the installation of Well 6 and associated pump and controllers. Engineer's address and telephone number:

Hydrometrics Inc.
3020 Bozeman Ave.
Helena, MT 59601
Telephone: 406-443-4150

2.6 NCI ENGINEERING

Under contract with the Hydrometrics Inc. who was under contract with DEQ/AML, NCI Engineering (NCI) was the Engineer for the project. As such, NCI prepared the final design and engineering specifications for the project and provided construction oversight. Engineer's address and telephone number:

NCI Engineering Co.
4509 North Star Blvd.
P.O. Box 6350
Great Falls, Montana 59405
Telephone: 406-453-5478

2.7 CONSTRUCTION MONITORING AND QUALITY ASSURANCE

NCI performed the quality assurance (QA) inspection for the project. Mr. Ralph McGillivray and Ms. Krista Hanson functioned as the full-time, on-site inspectors. Mr. Jake Neil functioned as the Project Manager and Engineer of Record.

3.0 CHRONOLOGICAL LISTING OF EVENTS

3.1 WATER DISTRIBUTION SYSTEM PROJECT

3.1.1 Pre-Bid Conference

A pre-bid conference held at the project Site on June 18, 2014 and was attended by representatives from 18 companies. The attendance list and pre-bid conference notes are included in **Appendix A-1** (Pre-Bid Conference Attendance list and Minutes).

3.1.2 Bid Date

The bid opening date for the project was July 9, 2014 at 2:00 p.m., at the DEQ/Remediation Division office, which was located at the Cogswell Building, C-Wing 118 in Helena, Montana.

3.1.3 Bid Opening

One qualified bidder responded with a bid. The bid results and the engineer's estimate are summarized and provided in **Appendix A-2** (Bid Results). The DEQ evaluated the one qualified bid and determined the bid to be acceptable.

3.1.4 Contract Award

DEQ Contract #414006 (Contract) was awarded to Ed Boland Construction, Inc., (Boland). A pre-award conference was held on July 17, 2014, at the NCI Engineering office located at 4509 North Star Boulevard in Great Falls, and attended by representatives from Boland, Hydrometrics, NCI, and DEQ/AML. The Boland bid was discussed, along with their ability to complete the project on time. Boland affirmed that they could complete the project for the amount bid, in the time frame specified (125 calendar days), and with the equipment listed. Other items discussed included project organization, site conditions and constraints, submittals, sequencing, equipment, and subcontractors. The DEQ/Remediation Division sent the Notice of Award to Boland on July 25, 2014 (**Appendix A-3**, Notice of Award).

3.1.5 Contract Agreement

The Contract Agreement with Boland was executed on August 4, 2014. The Notice to Proceed was issued on August 5, 2015. The contract time was 125 calendar days, which was increased by 43 days during the project. The anticipated completion date for the project was December 15, 2014. The Contract Agreement and Notice to Proceed are provided in **Appendix A-3**.

3.1.6 Construction Start-Up

The pre-construction meeting was held on August 21, 2014 at the Sand Coulee Volunteer Fire Department Hall (**Appendix A-4**, Pre-Construction Meeting Minutes). Participants discussed the proposed Boland construction schedule and sequencing, the Traffic Control

Plan, numerous material submittals, surveying needs, and submittal and pay request processes. Boland stated that their normal work week would consist of five 8-hour days. Boland mobilized equipment to the Site and began work on August 18, 2014.

3.1.7 Contract Time

The project was scheduled to be completed in 125 calendar days. A total of 36 contract days were added to the schedule from Work Directives 2 and 3, and an additional 7 days were added due to weather for a total of 168 calendar days.

3.1.8 Project Submittals

Prior to starting construction, Boland provided the required submittals as specified in the pre-construction meeting and the Special Provisions of the contract. The submittal process was ongoing throughout the project. Prior to starting a project task, Boland submitted the required materials submittals, plans, and certifications to the Engineer for approval. The reviewed and approved project submittals for the project are in **Appendix A-5** (Project Submittals [digital]).

3.1.9 Construction Overview

Boland began work on August 18, 2014 and reached substantial completion on June 25, 2015. The work was originally scheduled to be completed in one construction season, but due to the project starting late in the year, inclement weather forced a winter shutdown from November 25, 2014 to April 5, 2015. Major construction milestones for the project include:

- Installation of 8,957 ft of new 8” diameter, Class 200, C900 PVC distribution pipe.
- Installation of 4,117 ft of new ¾” SIDR7 HDPE service pipe.
- Installation of 78 new water meters.
- Installation of 22 new fire hydrants.
- Construction of a new Well House Control Building.
- Installation of a new 150,000 gallon glass coated steel tank, mixer and fence
- Demolition of the existing 100,000 gallon steel tank.
- Installation of 620 sq. yd of new sod.
- Resurfaced 2,001 sq. yd of Asphalt and Base Course Gravel streets.
- Resurfaced 3,413 sq. yd of tank access road.

The substantial completion inspection was conducted on June 25, 2015 and attended by representatives from Boland, NCI, and DEQ/AML.

3.1.10 Work Directive Changes

Over the duration of the project three Work Directive Changes were executed. Table 3-1 provides a summary of the Work Directive Changes. **Appendix A-6** contains the Work Directive Changes.

TABLE 3-1. WORK DIRECTIVE CHANGES SUMMARY

Work Directive Change #	Date	Descriptions	Additional Cost Required
1	11/25/14	Modified electrical at well house from 120/240 volt to 480 volt and deleted Well 3.	$8,308.00
2	5/4/15	Perform additional exploratory excavation for water service lines and add 35 calendar days to the project.	$62,535.00
3	5/7/15	Installation of Well 5 pump VFD and add 3 calendar days to the project.	$27,739.60

3.1.11 Change Orders

Three Change Orders were issued for the project. Copies of the change orders are included in **Appendix A-7**. The following is a brief overview of the change orders.

3.1.11.1 Change Order #1

Change order #1 was issued for the project on July 10, 2015. Change Order #1 increased the total contract amount by $228,387.08. The following is a summary of Change Order #1.

- Modified well house electrical components from 120/240 volt to 480 volt. ($8,308) WD#1
- Installed Variable Frequency Drive (VFD) and 25 HP 3 phase 230 volt pump and motor in Well 5. ($27,739.60) WD#3
- Added one additional 8" gate valve. ($1700)
- Added an additional 2,517 lf of ¾" water service line. ($88,095)
- Added an additional ten ¾" water service connections to new main. ($4,450)
- Added an additional nine ¾" curb stops and boxes. ($6,165)
- Added an additional 18 ¾" water service connections to existing piping. ($8,100)
- Added an additional four water meters. ($7,800)
- Decreased quantity of pipe bedding by 155 cubic yards. (-$2,487.52)
- Decreased quantity of Type 2 trench bedding by 253.5 cubic yards. (-$7,098)
- Added one additional fire hydrant guard post assembly. ($950)
- Added one additional flow fill trench plug. ($800)
- Added one additional auto air release manhole. ($2,850)
- Added an additional 491 hours of exploratory excavation. ($81,015)

3.1.11.2 Change Order #2

Change Order #2 was issued July 24, 2014. Change Order #2 increased the total contract amount by $34,753.85. The following is a summary of Change Order #2.

- Coating of curb stop service box when the service is in ground water. Houses #47, #49, #51 and #57. ($2,120)
- 11 curb stop boxes were coated before being installed. ($497)
- Added (26 ea) structural concrete and gravel subbase to top of meter pits to allow the service meter pits in traveled ways. ($675 ea) ($19,912.50)
- Added interior door to well house building. ($1,345)
- Seal the french drain at pressure reducing vault from ground water infiltration. ($285.80)
- Added rebar to sidewalk at well house building. ($759)
- Raise top slab at PRV structure – adding additional barrel section. ($3,774.75)
- Extra effort to install the fire hall meter at exterior wall and to run new water pipe back again to outside. ($600)
- Revised the sump and surge valve drain lines from inside water meter manhole to drain. (140 ft @ $39/ft). ($5,460)

3.1.11.3 Change Order #3

Change Order #3 was issued February 25, 2016. Change Order #3 decreased the total contract amount $1,587.90. The following is a summary of Change Order #3.

- Over-excavate weathered bedrock from water storage tank foundation excavation. ($3,196.00)
- Laboratory analysis to verify proper compaction of coal-rich soils. ($1,036.50)
- Increase the quantity by 80 sq. yards under Bid Item 408 Tank Access Roadway. ($9/sq. yard) ($720.00)
- Redi-Mix patrol to roughen surface of tank access roadway to enhance winter traction. ($500.00)
- Grading work in well house area for surface water control. ($1,800.00)
- Increase the estimated quantity by 1.0 unit under Bid Item 109 – 5/8” x ¾” Meter. ($1,950/unit) ($1,950.00)
- Re-plumb water service line at residence located at 35 Gulch Lane. ($210.60)
- Property repair work following service line excavation including backfilling, and restoration of driveway and stone retaining wall at 35 Gulch Lane. ($2,844.00)
- Increase the estimated quantity by 4.0 cubic yards under Bid Item 112 – Bedding – Type 2. ($28/cubic yard). ($112.00)
- Increase the estimated quantity by 222 sq. yards under Bid Item 414 – Lawn Sod Restoration. ($16/sq. yard) ($3,552.00)
- Increase the estimated quantity by 33 feet under Bid Item 103 – 6” PVC C-900, CL200. ($48/foot) ($1,584.00)
- Added 2” diameter check valve to well #4 outlet pipe. ($110.00)
- Reduction in depth of 50 foot section of water main trench 2. ($-1,000.00)

- Delete horizontal metal channels at bollards installed at Fire Hall per Fire Department request. ($-1,000.00)
- Delete curb stop tee posts and meter pit posts per Water District request. ($-1,600.00)
- Delete painting the electrical box located on outside of the well house building. ($-1,000.00)
- Decrease the estimated quantity by 2.0 units under Bid Item 115 – Sampling Station. ($2,700/unit) ($-5,400.00)
- Decrease the estimated quantity by 194 linear feet under Bid Item 406 – Culvert Replacement. ($42/foot) ($-8,148.00)
- Increase the estimated quantity by 69 square yards under Bid Item 407 – Asphalt and BC Gravel Restoration. ($30/square yard) ($2,070.00)
- Increase the estimated quantity by 152 square yards under Bid Item 409 – Gravel Surface Restoration. ($12/square yard) ($1,824.00)
- Increase the estimated quantity by 152 cubic yards under Bid Item 411 – Gravel Fill. ($29/cubic yard) ($1,711.00)
- Decrease the estimated quantity by 44 square yards under Bid Item 415 – Concrete Slab. ($90/square yard) ($-3,960.00)
  Decrease the estimated quantity by 150 linear feet under Bid Item 416 – Existing Sewer Drain or Drainfield Pipe Repair. ($18/foot) ($-2,700.00)

3.1.12 Work Stoppages

There were no official work stoppages during the construction project. There was a winter shut down period between November 26, 2014 to April 6, 2015.

3.1.13 Weather Days

A total of eight weather days were granted due to inclement and/or winter weather conditions which occurred in November 2014.

3.1.14 Requests for Payment

Boland issued nine Requests for Payment for work performed from 2014 through 2016. A summary of the pay requests is presented in Table 3-2.

TABLE 3-2. PAY REQUEST SUMMARY

Payment Request	Date	Earned	Retainage Withheld*	Gross Payment	Tax 1%	Net Payment
1	09/02/14	$108,080.00	$6,404.00	$101,676.00	$1,016.76	$100,659.24
2	09/30/14	$539,955.60	$26,997.78	$512,957.82	$5,129.58	$507,828.24
3	11/07/14	$582,492.80	$29,124.64	$553,368.16	$5,533.68	$547,834.48
4	12/16/14	$498,685.00	$24,934.25	$473,750.75	$4,737.51	$469,013.24
5	12/24/14	$9,670.00	$483.50	$9,186.50	$91.87	$9,094.63
6	05/24/15	$230,063.00	$11,503.15	$218,559.85	$2,185.60	$216,374.25
WD3	06/11/15	$27,739.60	$0.00	$27,739.60	$0.00	$27,462.20
7	07/10/15	$370,554.08	$18,527.70	$352,026.38	$3,520.26	$348,506.12
8	10/13/15	$47,775.85	$2,388.79	$45,387.06	$453.87	$44,933.19
9	05/09/16	$23,515.10	$1,175.76	$22,339.34	$223.39	$22,115.95
Final	08/01/16	$21,000.00		$142,539.57	$1,425.40	$141,114.17
Total		**$2,459,531.03**	**$121,539.57**	**$2,459,531.03**	**$24,317.92**	**$2,435,213.11**

3.2 WELL #6 PUMP AND VFD INSTALLATION PROJECT

3.2.1 Bid Date

The bid opening date for the project was November 16, 2016 at 5:00 p.m., at the NCI office, which was located at 4509 North Star Blvd in Great Falls, Montana.

3.2.2 Bid Opening

Two qualified bidders responded with a bid. The bid results are summarized and provided in **Appendix A-7** (Bid Results). DEQ and Hydrometrics evaluated the two qualified bids and determined the bids to be acceptable.

3.2.3 Contract Award

Hydrometrics under contract with DEQ/AML awarded the Subcontract #414006 (Contract) to Pat Byrne Drilling, Inc. (Pat Byrne). Hydrometrics Inc. sent the Notice of Award to Pat Byrne on November 21, 2016 (**Appendix A-8**, Notice of Award).

3.2.4 Contract Agreement

Due to inclement winter weather, the Contract Agreement with Pat Byrne was not executed until March 28, 2017. The Notice to Proceed was issued on March 28, 2017. The anticipated completion date for the project was May 31, 2017. The Contract Agreement is provided in **Appendix A-8**.

3.2.5 Construction Overview

Pat Byrne began work on April 6, 2017 and reached substantial completion on May 25, 2017. Major construction milestones for the project include:

- Installation of new Grundfos 150S250-13 submersible pump.
- Installation of 430 ft of new 3” SCH 40 PVC drop pipe.
- Installation of new Grundfos CUE VFD controller.
- Installation of new 2” flushing hydrant.
- Installation of storm water diversion berm at bottom of tank access road.

The substantial completion inspection was conducted on June 25, 2017 and attended by representatives from Pat Byrne, NCI, and DEQ/AML. Details regarding the construction and testing of Well #6 are documented in the Well Completion Report For Sand Coulee Water District Public Water Supply Well No. 6 (Hydrometrics, 2016) available at the internet address cited in Section 1.0.

4.0 CONSTRUCTION

4.1 WATER DISTRIBUTION SYSTEM PROJECT

4.1.1 Contractor Employees

The Contractor used 3 to 13 employees on the project Site at various times. The majority of the labor involved 1 to 7 equipment backhoe and front end loader operators, with the remaining personnel serving in a supervisory capacity.

4.1.2 Subcontractors

During the implementation of the project, Boland used the following subcontractors to complete specific project tasks.

Andre Excavation and Sewer Service
16 Manchester Lane
Great Falls, MT 59404
Phone: (406) 727-0032
Project Tasks: Installed water meter pits.

Four O Six Underground, Inc.
8121 Painted Pony Ln.
Helena, MT 59602
Phone: (406) 521-0015
Project Tasks: Performed the directional drill with the fusible PVC pipe.

Engineering America
647 Hale Ave N, Oakdale, MN 55128
Jason Miller-Project Manager
503-682-7600 Office
503-746-3357 Cell
jmiller@engamerica.com
Project Tasks: Supplied and installed the glass fused steel water tank.

Detailed Construction
1331 Stockett Rd.
Stockett, MT 59480
Phone: (406) 736-5470
Project Tasks: Provided form work, poured concrete, and finished inside of well house building.

Cooper Masonry
406 19th Street SW
Great Falls, MT 59404
Phone: (406) 452-2635
Project Tasks: Completed the masonry work on well house building.

United Electric
2127 Vaughn Rd.
Great Falls, MT 59404
Phone: (406) 452-0550
Project Tasks: Provide all electrical services for the project.

4.1.3 Major suppliers

During the project, Boland used the following materials suppliers to complete specific project tasks.

Healy Ruff /Terrex Industries
4307 North Star Blvd. Ste 2
Great Falls, MT 59405
Provided control systems for well house and tank.

Dickman Excavation
130 Gibson Flats Rd.
Great Falls, MT 59405
Provided gravels and bedding material.

Great Falls Sand and Gravel
1801 4th Ave. N.
Great Falls, MT 59405
Provided asphalt.

Montana Water Works
7128 Commercial Ave.
Billings, MT 59101
Supplied the meters, pipe, hydrants and valves.
Existing Water System Problems.

4.1.4 Construction Activities

4.1.4.1 Project Oversight

During construction, NCI provided project oversight for the project. The responsibility of the oversight personnel was to ensure that the Contractor was implementing the work as specified in DEQ Contract #414006 and communicate any discrepancies to the Owner and Contractor. NCI documented the project activities by completing Construction Daily Activity Reports provided electronically in **Appendix B-1**.

4.1.4.2 Quality Assurance

During the construction activities, QA measures occurred daily to ensure the project activities were completed as specified in the DEQ Contract #414006. These QA measures at the Site consisted of sampling soil for geotechnical parameters (soil proctors), compaction testing of the structural fill, and sampling concrete. Laboratory data sheets and results of the QA sampling and testing conducted during the construction activities at the Site are in **Appendix B-2**. NCI Engineering personnel utilized a densometer to continually monitor the trench backfill efforts as pipe was installed and for backfilling at the tank and well house structure. The continual monitoring ensured all density testing met the specifications prior to installing additional pipe or structure.

4.1.4.3 Weekly Progress Meetings

During the project, weekly progress meetings were held at the Fire Hall in Sand Coulee, Montana. The dates and location of the weekly progress meeting were mutually agreed upon by the Contractor, Owner, and Engineer and were typically held at 11:00 a.m. on every Tuesday during the project. NCI prepared an agenda and conducted each weekly progress meeting. The meetings identified decisions required, scheduling, milestones accomplished, opportunities, problems, and corrective actions. Each meeting included a discussion of the work to be performed in the week following the meeting (one-week look-ahead tasks). Field visits were conducted after each progress meeting. The weekly progress meeting minutes are provided in **Appendix B-3**.

4.1.4.4 Construction Photographs

NCI oversight personnel took daily construction photos to document construction activities and the implementation of project tasks. The construction photographs were assembled into a photo log and are in **Appendix B-4**.

4.2 WELL #6 PUMP AND VFD INSTALLATION PROJECT

4.2.1 Contractor Employees

The Contractor used 3 to 5 employees on the project Site at various times. The majority of the labor involved 1 drill truck, a backhoe, and a front end loader.

4.2.2 Subcontractors

During the implementation of the project, Pat Byrne used the following subcontractors to complete specific project tasks.

United Electric
2127 Vaughn Rd.
Great Falls, MT 59404
Phone: (406) 452-0550
Project Tasks: Provided all electrical services for the project

4.2.3 Construction Activities

4.2.3.1 Project Oversight

During construction, NCI provided project oversight for the project. The responsibility of the oversight personnel was to ensure that the Contractor was implementing the work as specified and in accordance with DEQ Public Water Supply rules and regulations. NCI documented the project activities by completing a Certification of Completion provided electronically in **Appendix B-9**. DEQ-AML issued a Task Order modification (DEQ Contract No. 414019-TO8B) to add a 2-inch flushing hydrant to facilitate purging and decontamination of Well #6, and the cost of adding pollution liability insurance for the work for a total of $5,700.

4.2.3.2 Well Disinfection

On May 31, 2017, the Sand Coulee Water District along with oversight from Hydrometrics, Inc. chlorinated Well 6 using GLB Supercharge 65% available chlorine powder. The water in the well was recirculated throughout the well casing, well pump, and pump piping using a hose connected to the 2" flushing hydrant. Samples were collected after 24 hours to verify a minimum of 25 ppm residual chlorine was still present in the well. After confirmation of the residual chlorine content, the well was flushed for 20 minutes to clear the chlorine from the well. On June 6, 2017 Sand Coulee Water District personnel collected two samples and submitted them to Aqua Tech Laboratory in Lewistown, MT for bacteriological analysis. Both samples were negative for total coliforms and E.Coli. Results of the well disinfection are provided in **Appendix B-10**. DEQ-PWS approved operation of Well 6 in an email dated June 12, 2017.

5.0 QUANTITIES USED

5.1 PROJECT SUMMARY

The water distribution project was completed in 168 calendar days and the well #6 pump and VFD installation project was completed in 57 calendar days. Appendix B-5 provides the Reconciliation of Quantities which summarizes the estimated and final quantities and costs associated with each pay item. The reconciliation of quantities also lists the Change Orders (modifications) that were not part of the original contract.

6.0 TOTAL PROJECT COSTS

The total construction cost for the Sand Coulee Water System Project was $2,504,102.03. Boland's original bid was $2,197,978.00; 3 change orders were issued resulting in an increase of $261,553.03. Pat Byrne Drilling's original bid was $38,871.00; 1 change order was issued resulting in an increase of $5,700.00.

Costs for engineering design and bid specification preparation were $247,642.98. Construction inspection and management costs were $325,354.17.

Table 6-1 lists the engineering, oversight, and construction costs for the project. The total project cost was $3,077,099.18. The percent of total project characterization, engineering, and management costs compared to total project construction costs was 19%.

TABLE 6-1. ANALYSIS OF ENGINEERING AND CONSTRUCTION COSTS

ENGINEERING SERVICES	**AMOUNT**
Engineering Design and Bid Specification Preparation	$247,642.98
Construction Inspection and Management	$325,354.17
Total Engineering Costs	**$572,997.15**
CONSTRUCTION SERVICES	
Boland Original Contract	$2,197,978.00
Change Orders (#1, #2, and #3)	$261,553.03
Pat Byrne Drilling Original Contract	$38,871.00
Task Order Modification	$5,700.00
Total Construction Costs	**$2,504,102.03**
TOTAL PROJECT COST (Engineering and Construction)	**$3,077,099.18**
Engineering Design/Construction Cost	10%
Construction Management/Construction Cost	13%
Total Engineering Cost/Construction Cost	**23%**
Total Engineering Cost/Total Project Cost	**19%**

7.0 POST CONSTRUCTION

7.1 MAINTENANCE OR FOLLOW-UP

Hydrostatic testing of the tank included manual tank gauging and the use of data logging pressure transducers. The first hydrostatic test was conducted by Boland on July 9 for a period of 11 hours and 40 minutes. Manual tank gauging indicated a drop in the water level of six inches. With a tank diameter of 31 feet, the measured outflow rate was approximately 242 gallons per hour. Based on these results, the tank was emptied and dried, and sealant was placed in cracks identifies in the tank floor on August 4, 2014. Manual tank gauging conducted on August 13 and 17 by NCI indicated a reduction of 7/8 inch over a period of 93.5 hours, equating to an outflow rate of approximately 4.4 gallons per hour. Manual tank gauging conducted on August 20 indicated a reduction of 7/8 inch over a period of 72 hours, equating to an outflow rate of approximately 5.7 gallons per hour.

The tank was emptied and dried in September 2015 and a coating was placed on the tank floor on September 22 and 23, 2015. Manual tank gauging conducted on October 9 and 12 by NCI indicated a reduction of 5/16 inch over a period of 72 hours, equating to an outflow rate of approximately 2.0 gallons per hour. Manual tank gauging conducted on October 14 indicated a reduction of 7/16 inch over a period of 48.5 hours, equating to an outflow rate of approximately 4.9 gallons per hour. Follow-up measurements collected on October 15, 26, and 29 recorded fluid level drops corresponding to outflow rates of 5.5, 2.9, and 4.0 gallons per hour, respectively. A pressure transducer installed in the tank from October 29 through November 2, 2014 recorded an outflow rate of approximately 4.0 gallons per hour. A pressure transduced placed within a five gallon plastic bucket within the tank to measure evaporation recorded a reduction in fluid level approximately 1/10th that of the loss recorded within the tank. Results from this investigation are presented in a Technical Memorandum prepared by Pioneer Technical Services, Inc. included in **Appendix B-6** .

In consultation with DEQ/AML, Boland investigated leaks from the tank and associated piping by excavating three locations in fill materials outside the tank circumference June 13 through 15, 2015. The excavation locations were selected to examine coupling and valves for any leakage. The excavations were completed to the bottom of the imported fill, approximately six feet below ground surface. No evidence of water was detected. Based on the investigation, the outflow was determined to be the result of one of the shutoff valves to system piping not fully seating. Follow-up inspections of the area performed by the Water District and DEQ/AML from 2015 through 2017 have not identified any indications of a leak to the subsurface, including wet areas, seeps, or areas of enhanced vegetative growth. Boland installed three two-inch monitoring wells in the excavation locations for future observation and added an additional two year warranty for the tank. A copy of the correspondence from Boland describing the investigation and additional warranty is included in **Appendix B-6** .

7.2 AS-RECORDED DRAWINGS

NCI prepared the As-Recorded Drawings based on field survey data and field notes. The As-Recorded Drawings represent the Site conditions after completion of construction activity. The As-Recorded Drawings are provided in **Appendix B-7** (provided under separate cover).

7.3 OTHER O&M DOCUMENTS

Operation and Maintenance Manuals for Controls, Badger Water Service Meters, Cla-valves, and Sparling flow meter are stored in the Sand Coulee well house. (Under separate cover).

7.4 WARRANTIES AND PERMITS

Warranties and Permits are provided in **Appendix B-8**. (Under separate cover).

APPENDIX A
PROJECT CORRESPONDENCE

APPENDIX A-1

SAND COULEE WATER DISTRIBUTION SYSTEM REPLACEMENT
PRE-BID CONFERENCE AGENDA
JUNE 18, 2014

I. INRODUCTION (DEQ)

1. Sign Up Sheet (Please Print Clearly)
2. Introductions
3. Overview of Bid Award Timeline.
4. Montana OneStop Internet Site
5. Existing Reports

II. BIDDING AND CONTRACT AWARD (DEQ)

1. Bid requirements - Section 1.2 Instructions to Bidders
2. Performance and Payment bonds required for 100% of contract total price.
3. Liquidated damages are $1,250.00 dollars per day.
4. The Contract Time will be 125 consecutive calendar days. Work will begin only after Contractor receives a Notice to Proceed from Owner.
5. All questions about the meaning or intent of the Contract Documents are to be submitted in writing to and must be received by the Montana Department of Environmental Quality ("DEQ"), by fax (406) 841-5050, by mail, or by e-mail up to 12:00 PM on June 23, 2014**.**
6. Bids must be accompanied with Completed Bid Form, 10% Bid Security, completed Contractor Personnel and Proposed Project Approach, and completed Contractor Questionnaire and Ownership Information.
7. DEQ will evaluate lowest responsive/responsible bid. Bids are valid for 30 days after Bid opening.

III. SCOPE OF WORK PRESENTATION (Hydrometrics/NCI)

IV. QUESTIONS AND ANSWERS SESSION

V. SITE TOUR

Sand Coulee Water System Replacement Project DEQ Contract Number 414006

Mandatory Pre-Bid Conference and Walk Through Attendee List: 6/18/2014 - 2:00 PM - Sand Coulee Volunteer Fire Department located at 520 East Hunter Road

Business Name, Mailing Address and Email Address	Representative Business Phone & Cell Phone
Automation Werx, LLC PO Box 3066 Idaho Falls ID 83403 **Email:** nick@automationwerx.com	**Representative:** Nick **Business Phone:** (208) 521-8089 **Cell Phone**
Central Plumbing and Heating 3701 River Drive N Great Falls MT 59405 **Email:**	**Representative:** Trent Short **Business Phone:** (406) 761-2557 **Cell Phone** (406) 868-7366
Dick Anderson Construction 3424 HWY 12 E Helena MT 59601 **Email:**	**Representative:** Cory Frizzell **Business Phone:** (406) 443-3225 **Cell Phone** (406) 586-0889
Ed Boland Construction 4701 N STAR BLVD Great Falls MT 59405 **Email:** barry@bolandconstruction.net	**Representative:** Barry Boland **Business Phone:** (406) 761-1063 **Cell Phone** (406) 799-4761
Engineering America 734 S 23rd AVE APT 6 Bozeman MT 59718 **Email:** ktucker@engamerica.com	**Representative:** Kal Tucker **Business Phone:** (406) 579-8821 **Cell Phone** (406) 579-8821
HD Supply 7372 Interstate Missoula MT 59808 **Email:** michael.richards@hdsupply.com	**Representative:** Michael Richards **Business Phone:** (406) 728-7336 **Cell Phone** (406) 370-8574

Business Name, Mailing Address and Email Address	Representative Business Phone & Cell Phone	
Helena Sand & Gravel		
2209 Airport Road	**Representative:**	Mike Grandy
Helena MT 59601	**Business Phone:**	(406) 441-9603
Email: ken.frost@oldcastlematerials.com	**Cell Phone**	
Jordan Contracting		
373 Arbiter Plant RD	**Representative:**	Jerry Jordan
Anaconda MT 59711	**Business Phone:**	(406) 563-8276
Email: jci3@jordancontracting.com	**Cell Phone**	(406) 691-1067
M&D Construction		
	Representative:	Rhett Hulitt
	Business Phone:	(406) 453-8825
Email: rhett@digmd.net	**Cell Phone**	(406) 769-1126
Mungas CO		
PO Box 236	**Representative:**	Ray Bennett
Philipsburg MT 59858	**Business Phone:**	(406) 859-3203
Email: mungasco@yahoo.com	**Cell Phone**	(406) 439-9034
NCI Engineering		
4509 N Star BLVD	**Representative:**	Ralph McGilliary
Great Falls MT 59405	**Business Phone:**	(406) 453-5478
Email:	**Cell Phone**	
Northwest Pipe Fitting INC		
404 17th AVE NE	**Representative:**	Justin French
Great Falls MT 59404	**Business Phone:**	(406) 727-9843
Email: jfrench@northwestpipe.com	**Cell Phone**	(406) 899-4421
Shearer & Associates, INC		
1404 NE 134TH ST STE 200	**Representative:**	Ryan Weaver
Vancouver WA 98685	**Business Phone:**	(360) 666-5600
Email:	**Cell Phone**	(360) 904-0370
Shumaker Trucking and Excavating		
	Representative:	Frank
	Business Phone:	(406) 727-3537
Email: frank@shumakert-e.com	**Cell Phone**	(406) 788-2196

Business Name, Mailing Address and Email Address	Representative Business Phone & Cell Phone	
TSE		
PO Box 176	**Representative:**	Travis Johnson
Belt MT 59412	**Business Phone:**	(406) 277-3057
Email: t.johnsonent@yahoo.com	**Cell Phone**	(406) 788-5202
United Materials		
2100 9th AVE NE	**Representative:**	Scott Schuman
Great Falls MT 59401	**Business Phone:**	(406) 453-7692
Email: scott@unitedmaterialsgtf.com	**Cell Phone**	(406) 899-6615
Williams Civil Construction		
2131 Industrial DR	**Representative:**	Rusty South
Bozeman MT 59715	**Business Phone:**	(406) 522-0133
Email: rsouth@williamscivilconstruction.c	**Cell Phone**	(406) 368-6368
Williamson Fencing & Directional Drilling		
	Representative:	Ryan Yurek
	Business Phone:	(406) 799-1046
Email: ryan@williamsonfence.com	**Cell Phone**	(406) 761-1265
Yellowstone Waterworks		
PO Box 81348	**Representative:**	Cavin Noddings
Billings MT 59108	**Business Phone:**	(406) 633-2316
Email: cavin@ywaterworks.com	**Cell Phone**	(406) 670-3224

APPENDIX A-2

SAND COULEE WATER SYSTEM REPLACEMENT PROJECT ENGINEER'S ESTIMATE (revised 8-1-13) Schedule 1 - Water Distribution		ENGINEER'S ESTIMATE				SAND COULEE WATER SYSTEM REPLACEMENT PROJECT S ESTIMATE			
ITEM NO.	ITEM	UNIT	ESTIMATED QUANTITY	UNIT BID PRICE	TOTAL	UNIT	ESTIMATED QUANTITY	UNIT BID PRICE	TOTAL
101	8" PVC C-900, CL200	L.F.	8,951	$65.00	$581,815.00	L.F.	8,957	$54.00	$483,678.00
102	8" Gate Valve	EA	22	$1,600.00	$35,200.00	EA	22	$1,700.00	$37,400.00
103	6" PVC C-900, CL200 (FH mains)	EA	847	$53.00	$44,891.00	EA	847	$48.00	$40,656.00
104	RESERVED				$0.00				$0.00
105	3/4" Water Service Line (HDPE IPS SIDR7) and Future Stub	L.F.	1600	$35.00	$56,000.00	L.F.	1600	$35.00	$56,000.00
106	3/4" Water Service Connect to New Main	EA	78	$650.00	$50,700.00	EA	67	$445.00	$29,815.00
107	3/4" Curb Stop and Box	EA	78	$350.00	$27,300.00	EA	78	$685.00	$53,430.00
108	3/4" Water Service Connect to Existing Line	EA	78	$400.00	$31,200.00	EA	89	$450.00	$40,050.00
109	5/8" x 3/4" Meter (and Meter Pit Installation)	EA	78	$1,800.00	$140,400.00	EA	78	$1,950.00	$152,100.00
110	Fire Hydrant Assembly	EA	22	$4,500.00	$99,000.00	EA	22	$5,000.00	$110,000.00
111	Imported Bedding - Type 1 (Pipe)	C.Y.	1,700	$34.00	$57,800.00	C.Y.	1,700	$16.00	$27,200.00
112	Bedding - Type 2 (Trench Stabilization)	C.Y.	260	$34.00	$8,840.00	C.Y.	260	$28.00	$7,280.00
113	Connect New (6" or 8") Main to Existing (6") Main	EA	1	$2,000.00	$2,000.00	EA	1	$775.00	$775.00
114	Fire Hydrant Guard Post Assembly	EA	6	$1,500.00	$9,000.00	EA	6	$950.00	$5,700.00
115	Sampling Station	EA	2	$2,500.00	$5,000.00	EA	2	$2,700.00	$5,400.00
116	Temporary Water	L.S.	1	$15,000.00	$15,000.00	L.S.	1	$40,000.00	$40,000.00
117	Flowable Fill Trench Plug	EA	3	$1,200.00	$3,600.00	EA	3	$800.00	$2,400.00
118	RESERVED				$0.00				$0.00
119	RESERVED				$0.00				$0.00
120	2" ∅ Meter (in Fire Hall) and 2" Service Piping	L.S.	1	$12,000.00	$12,000.00	L.S.	1	$9,200.00	$9,200.00
121	Pressure Reducing Station	L.S.	1	$22,000.00	$22,000.00	L.S.	1	$24,000.00	$24,000.00
122	Meter Reading, Software and Training	L.S.	1	$13,000.00	$13,000.00	L.S.	1	$11,500.00	$11,500.00
123	RESERVED				$0.00				$0.00
124	Directional Drilling with 6" or 8" HDPE Pipe	L.F.	240	$100.00	$24,000.00	L.F.	240	$270.00	$64,800.00
125	Auto Air Release Manhole	EA	1	$10,000.00	$10,000.00	EA	1	$2,850.00	$2,850.00
	SCHEDULE 1 TOTAL				**$1,248,746.00**				**$1,204,234.00**
Schedule 2 - Storage Tank									
ITEM NO.	ITEM	UNIT	ESTIMATED QUANTITY	UNIT BID PRICE	TOTAL	UNIT	ESTIMATED QUANTITY	UNIT BID PRICE	TOTAL
201	Unclassfield Excavation/Site	L.S.	1	$8,000.00	$8,000.00	L.S.	1	$10,000.00	$10,000.00
202	Foundation	L.S.	1	$45,000.00	$45,000.00	L.S.	1	$48,000.00	$48,000.00
203	150,000 gal Storage Tank	L.S.	1	#########	$180,000.00	L.S.	1	$210,000.00	$210,000.00
204	Tank Level Control Manhole	L.S.	1	$8,000.00	$8,000.00	L.S.	1	$2,500.00	$2,500.00
205	Inlet Piping (From Wells to Tank) and Valves	L.S.	1	$28,000.00	$28,000.00	L.S.	1	$30,000.00	$30,000.00
206	Outlet Piping (Tank to 1+00)	L.S.	1	$6,500.00	$6,500.00	L.S.	1	$2,500.00	$2,500.00
207	Overflow/Drain Piping and Valve	L.S.	1	$20,000.00	$20,000.00	L.S.	1	$14,000.00	$14,000.00
208	Flow Meter Manhole	L.S.	1	$28,000.00	$28,000.00	L.S.	1	$34,000.00	$34,000.00
209	Security Fence at Storage Tank	L.F.	220	$30.00	$6,600.00	L.F.	220	$30.00	$6,600.00
210	Existing Storage Tank Removal	L.S.	1	$5,000.00	$5,000.00	L.S.	1	$12,500.00	$12,500.00
211	Submersible Mixer	L.S.	1	$18,000.00	$18,000.00	L.S.	1	$17,000.00	$17,000.00
	SCHEDULE 2 TOTAL				**$353,100.00**				**$387,100.00**
Schedule 3 - Pumping (Well House)									
ITEM NO.	ITEM	UNIT	ESTIMATED QUANTITY	UNIT BID PRICE	TOTAL	UNIT	ESTIMATED QUANTITY	UNIT BID PRICE	TOTAL
301	Excavation, Grading and Concrete	L.S.	1	$40,000	$40,000.00	L.S.	1	$12,300	$12,300.00
302	Utility Company Electrical Service Upgrade	L.S.	1	$30,000	$30,000.00	L.S.	1	$2,500	$2,500.00
303	Masonry Install	L.S.	1	$40,000	$40,000.00	L.S.	1	$43,500	$43,500.00
304	Building Roof, Interior, Doors and Painting	L.S.	1	$30,000	$30,000.00	L.S.	1	$16,200	$16,200.00
305	General Electrical	L.S.	1	$50,000	$50,000.00	L.S.	1	$17,000	$17,000.00
306	SCADA, Control and Webcast	L.S.	1	$70,000	$70,000.00	L.S.	1	$105,000	$105,000.00
307	Heating	L.S.	1	$4,000	$4,000.00	L.S.	1	$2,000	$2,000.00
308	RESERVED				$0.00				$0.00
	SCHEDULE 3 TOTAL				**$264,000.00**				**$198,500.00**
Schedule 4 - Surface Restoration and Miscellaneous									
ITEM NO.	ITEM	UNIT	ESTIMATED QUANTITY	UNIT BID PRICE	TOTAL	UNIT	ESTIMATED QUANTITY	UNIT BID PRICE	TOTAL
401	Mobilization, Bonding, Insurance	L.S.	1	$8,000.00	$8,000.00	L.S.	1	$148,000.00	$148,000.00
402	Layout and Construction Staking	L.S.	1	$8,500.00	$8,500.00	L.S.	1	$36,000.00	$36,000.00
403	Traffic Control	L.S.	1	$5,000.00	$5,000.00	L.S.	1	$12,500.00	$12,500.00
404	Record Documents	L.S.	1	$3,500.00	$3,500.00	L.S.	1	$19,500.00	$19,500.00
405	Exploratory Excavation	H.R.	30	$185.00	$5,550.00	H.R.	15	$165.00	$2,475.00
406	Culvert Replacement (with Distribution)	L.F.	200	$25.00	$5,000.00	L.F.	200	$42.00	$8,400.00
407	Asphalt and BC Gravel Restoration (3"/10")	S.Y.	1927	$50.00	$96,350.00	S.Y.	1932	$30.00	$57,960.00
408	Tank Access Roadway (4" depth)	S.Y.	3413	$7.00	$23,891.00	S.Y.	3413	$9.00	$30,717.00
409	Gravel Surface Restoration (6" depth)	S.Y.	1400	$9.00	$12,600.00	S.Y.	4975	$12.00	$59,700.00
410	Geotextile Stabilization Fabric	S.Y.	1400	$2.00	$2,800.00	S.Y.	1400	$2.50	$3,500.00
411	Gravel Fill (Pit-Run)	C.Y.	168	$25.00	$4,200.00	C.Y.	168	$29.00	$4,872.00
412	Dryland Seed Restoration	L.S.	1	$4,000.00	$4,000.00	L.S.	1	$5,000.00	$5,000.00
413	Culverts and Tank Hill	L.S.	1	$1,500.00	$1,500.00	L.S.	1	$1,500.00	$1,500.00
414	Lawn Sod Restoration	S.Y.	487	$10.00	$4,870.00	S.Y.	620	$16.00	$9,920.00
415	Concrete Slab	S.Y.	100	$50.00	$5,000.00	S.Y.	50	$90.00	$4,500.00
416	Existing Sewer Drain or Drainfield Pipe Repair	L.F.	400	$30.00	$12,000.00	L.F.	200	$18.00	$3,600.00
	SCHEDULE 4 TOTAL				**$202,761.00**				**$408,144.00**
				CONSTRUCTION TOTAL	**$2,068,607.00**			**CONSTRUCTION TOTAL**	**$2,197,978.00**

APPENDIX A–3

NOTICE TO PROCEED

TO: Ed Boland Construction, Inc.
4701 North Star Blvd.
Great Falls, MT 59405

DATE: August 18, 2014

PROJECT: **Sand Coulee Water System Replacement Project**

DEQ Contract No. 414006

In accordance with the Agreement dated **July 21, 2014** you are hereby notified to commence Work no later than **August 18, 2014**, and you are to commence and complete the Work as the following schedule describes: **The Contract Time will include one hundred and twenty five (125) consecutive calendar days to complete the Work.** The date of completion of all Work is, therefore, **December 21, 2014**.

OWNER: DEPARTMENT OF ENVIRONMENTAL QUALITY

By: _____

Title: Reclamation Specialist

ACCEPTANCE OF NOTICE TO PROCEED

Receipt of the above Notice to Proceed is hereby acknowledged this 18 day of August, 2014.

CONTRACTOR: Ed Boland Construction

By: _____

Title: President

Rev. 6/04

AGREEMENT

OWNER: The Montana Department of Environmental Quality

CATEGORY OF IMPROVEMENTS: Mine Reclamation

CONTRACT TITLE: Sand Coulee Water System Replacement Project

CONTRACT NUMBER: DEQ Contract No. 414006

THIS AGREEMENT made as of the 21st day of July, 2014, by and between the Montana Department of Environmental Quality, hereinafter called Owner, and Ed Boland Construction, Inc. with legal address and principal place of business at 4701 North Star Blvd., Great Falls, MT 59405 hereinafter called Contractor. Owner and Contractor in consideration of the mutual covenants hereinafter set forth, agree as follows:

ARTICLE 1. WORK

1.1 Contractor will perform the Work as indicated in the Contract Documents. The Work is summarized in the Drawings, Special Provisions and Technical Specifications.

ARTICLE 2. ENGINEER

2.1 NCI Engineering Co., 4509 North Star Blvd., Great Falls, MT 59405 will act as Engineer in connection with completion of the Work in accordance with the Contract Documents, unless another engineer is designated by Owner.

ARTICLE 3. CONTRACT TIMES

3.1 The Work will commence as provided in Article 2 of the Conditions of the Contract. All Work must be substantially complete, as defined in the General Conditions and as described in the "Contract Times" section of the Instructions to Bidders, within one hundred twenty five (125) consecutive calendar days unless adjusted under Article 12 of the Contract Documents.

3.2 Contractor agrees that the work will be prosecuted regularly, diligently and uninterruptedly at such rate of progress as will insure full completion thereof within the Contract Times stated above. It is expressly understood and agreed that the Contract Times are reasonable for the completion of the Work, taking into consideration the average climatic range and usual industrial conditions prevailing in this locality.

ARTICLE 4. CONTRACT PRICE

4.1 Owner will pay Contractor for performance of the Work in accordance with the Contract Documents in current funds at the Total Contract Price appearing in the Contractor's Bid Form attached to this Agreement.

ARTICLE 5. APPLICATIONS FOR PAYMENT

5.1 Contractor will submit Applications for Payment in accordance with Article 14 of the General Conditions. Applications for Payment will be processed by Engineer as provided in the General Conditions.

ARTICLE 6. PROGRESS AND FINAL PAYMENTS

6.1 Owner will make progress payments on account of the Contract Price on the basis of Contractor's Applications for Payment as recommended by Engineer, monthly during construction as provided below. All progress payments will be on the basis of the progress of the work provided for in Paragraph 14.02 of the General Conditions.

6.2 Prior to Substantial Completion, and so long as Contractor is performing by the terms of the Agreement, progress payments will be in an amount equal to 95 percent of the value of the work completed, less, in each case, the aggregate of payments previously made [less the additional retainage of $1,000 dollars per Section 18-2-404(2)]. Owner reserves the right, without prejudice to any other remedy, to increase the retainage, if Owner determines that Contractor is not performing in accordance with the terms of this Agreement.

6.3 Upon Substantial Completion of the principal elements of the Work, Owner may, at its discretion, deliver a portion of the retainage to Contractor.

6.4 Upon final inspection and acceptance of all of the Work, in accordance with Paragraph 14.06 of the General Conditions, Owner will pay the remainder of the Contract Price as recommended by Engineer, retaining $1,000 until termination of the Agreement as required by Section 18-2-404(2), MCA.

ARTICLE 7. LIQUIDATED DAMAGES

7.1 Owner and Contractor acknowledge that time is of the essence in the performance of the Work required under this Agreement and that Owner will suffer financial and other losses if the Work is not completed within the Contract Times (specified in Article 3 above, plus any extensions thereof allowed in accordance with Article 12 of the General Conditions). They also recognize the delay, expense, and difficulty involved in proving, in a legal or arbitration proceeding, the actual loss suffered by Owner if the Work is not completed on time. Accordingly, to avoid the time, expense, delay, and difficulty in proving or disputing such damages and to provide certainty and predictability for both parties, Owner and Contractor agree that Contractor will pay Owner as liquidated damages for delay (and not as a penalty) the amount of Twelve Hundred and Fifty ($1,250.00) dollars per day for each day beyond the Contract Time that the Work is not substantially complete.

The completion dates specified here are subject to adjustment in accordance with Paragraph 12.03 of the General Conditions, provided that Contractor will furnish Owner the required notification of such delays in accordance with Paragraph 12.02 of the General Conditions.

ARTICLE 8. CONTRACT DOCUMENTS

8.1 The Contract Documents which, together with this executed document, comprise the Agreement between Owner and Contractor are attached hereto and made a part hereof and consist of the following:

8.1.1 The Instructions to Bidders

8.1.2 Contractor's submitted Bid Form and Questionnaire Responses, together with any properly and timely submitted amendments or supplements thereto, and other documentation requested by Owner and submitted by Contractor with the Bid or prior to the Notice of Award;

8.1.3 The required and properly issued Construction Performance Bond, Construction Payment Bond and other required bonds and certificates of insurance;

8.1.4 Notice of Award;

8.1.5 Notice to Proceed;

8.1.6 General Conditions, EJCDC Document 1910-8, 1996 Edition (modified);

8.1.7 Supplementary Conditions, Parts I and II;

8.1.8 Special Provisions;

8.1.9 Technical Specifications;

8.1.10 Drawings;

8.1.11 Addenda numbers ___1_____ through __3_____ modifying documents which are part of this Agreement; and

8.1.12 All properly executed or issued amendments and modifications of this Agreement, including Written Amendments, Change Orders, Work Change Directives, Field Orders, Engineer's written interpretations and clarifications issued after execution of this Agreement, and manufacturer's or other specifications submitted by Contractor and approved by Engineer.

ARTICLE 9. LIAISONS

9.1 Required written notices will be sent by registered or certified mail, return receipt requested, or by similar service. A party may change a contact person(s) or address given below by notifying the other party in writing. Notices to be given by one party to the other will, unless the Contract Documents provide otherwise, be sent to the following contacts for each party:

For DEQ/Owner:

Department of Environmental Quality
Attention: Thomas Henderson
Remediation Division
P.O. Box 200901
Cogswell Building, C-Wing 118, 1400 Broadway
Helena, MT 59620
(406) 841-5052

For Contractor:

Ed Boland Construction, Inc.
Attention: Barry Boland
President
4701 N. Star Boulevard
Great Falls, MT 59405

with a copy to:

Department of Environmental Quality
Attention: Thad Adkins - Legal Counsel
P.O. Box 200901
Cogswell Building, C-Wing 118, 1400 Broadway
Helena, MT 59620
(406) 841-5022

ARTICLE 10. MISCELLANEOUS

10.1 Terms used in this Agreement which are defined in Article 1 of the Conditions of the Contract will have the meanings assigned in the Conditions of the Contract.

10.2 Neither Owner or Contractor will, without the prior written consent of the other, assign or sublet in whole or in part his/her interest under any of the Contract Documents; and, specifically but without limitation, Contractor will not assign any monies due or to become due without the prior written consent of Owner. In case Contractor, with Owner's written consent, assigns all or any part of any monies due or to become due under this Contract, the instrument of assignment will contain a clause providing that the right of the assignee in and to any monies due or to become due to Contractor will be subject to prior claims of all persons, firms, and corporations for services rendered or materials supplied for the performance of the Work called for in this Contract.

10.3 Owner and Contractor each binds itself, its partners, successors, assigns, and legal representatives in respect to all covenants, agreements, and obligations contained in the Contract Documents.

10.4 The Contract Documents constitute the entire agreement between Owner and Contractor and, except as expressly provided in the Contract Documents themselves, may be altered, amended, or repealed only by a Written Modification signed by both parties.

IN WITNESS WHEREOF, the parties hereto have executed this Agreement. All portions of the Contract Documents have been signed or identified by Owner and Contractor or by Engineer on their behalf.

This Agreement will become effective on **July 21, 2014**.

OWNER:

STATE OF MONTANA DEPARTMENT
OF ENVIRONMENTAL QUALITY

By: Vicki J Woodrow

VICKI J. WOODROW
DEQ Contracts Officer
Financial Services
Metcalf Building, Room 003
1520 East Sixth Avenue, PO Box 200901
Helena, Montana 59620-0901

07/22/14
Date

CONTRACTOR:

ED BOLAND CONSTRUCTION, INC

By:

BARRY BOLAND
President
4701 N. Star Blvd
Great Falls, MT 59405

07/29/2014
Date

(CORPORATE SEAL) (If Applicable)

Approved for legal content by:

Thad Adkins
Legal Counsel, DEQ

7-21-2014
Date

RECEIVED BY DEQ
FINANCIAL SERVICES
2014 JUL 30 AM 9:39

Note: If Contractor is a corporation, a certificate evidencing the principal's authority to sign on behalf of the corporation must accompany the executed Agreement.

10.4 The Contract Documents constitute the entire agreement between Owner and Contractor and, except as expressly provided in the Contract Documents themselves, may be altered, amended, or repealed only by a Written Modification signed by both parties.

IN WITNESS WHEREOF, the parties hereto have executed this Agreement. All portions of the Contract Documents have been signed or identified by Owner and Contractor or by Engineer on their behalf.

This Agreement will become effective on **July 21, 2014**.

OWNER:

STATE OF MONTANA DEPARTMENT
OF ENVIRONMENTAL QUALITY

By: Vicki J Woodrow

VICKI J. WOODROW
DEQ Contracts Officer
Financial Services
Metcalf Building, Room 003
1520 East Sixth Avenue, PO Box 200901
Helena, Montana 59620-0901

07/23/14
Date

CONTRACTOR:

ED BOLAND CONSTRUCTION, INC

By: 07/23/14

BARRY BOLAND
President
4701 N. Star Blvd
Great Falls, MT 59405

Date

(CORPORATE SEAL) (If Applicable)

Approved for legal content by:

Thad Adkins
Legal Counsel, DEQ

7-21-2014
Date

Note: If Contractor is a corporation, a certificate evidencing the principal's authority to sign on behalf of the corporation must accompany the executed Agreement.

SAND COULEE
WATER SYSTEM REPLACEMENT PROJECT - IFB 414006

ENGINEER'S ESTIMATE (revised 6-1-13)

Schedule 1 - Water Distribution

ITEM NO.	ITEM	ENGINEER'S ESTIMATE UNIT	ESTIMATED QUANTITY	UNIT BID PRICE	TOTAL	ED BOLAND CONSTRUCTION UNIT	ESTIMATED QUANTITY	UNIT BID PRICE	TOTAL
101	8" PVC C-900, CL200	L.F.	8,951	$65.00	$581,815.00	L.F.	8957	$54.00	$483,678.00
102	8" Gate Valve	EA	22	$1,600.00	$35,200.00	EA	22	$1,700.00	$37,400.00
103	6" PVC C-900, CL200 (FH mains)	EA	847	$53.00	$44,891.00	EA	847	$48.00	$40,656.00
104	RESERVED				$0.00				$0.00
105	3/4" Water Service Line (HDPE IPS SIDR7) & Future Stub	L.F.	1600	$35.00	$56,000.00	L.F.	1600	$35.00	$56,000.00
106	3/4" Water Service Connect to New Main	EA	78	$650.00	$50,700.00	EA	67	$445.00	$29,815.00
107	3/4" Curb Stop and Box	EA	78	$350.00	$27,300.00	EA	78	$685.00	$53,430.00
108	3/4" Water Service Connect to Existing Line	EA	78	$400.00	$31,200.00	EA	89	$450.00	$40,050.00
109	5/8" x 3/4" Meter (and Meter Pit Installation)	EA	78	$1,800.00	$140,400.00	EA	78	$1,950.00	$152,100.00
110	Fire Hydrant Assembly	EA	22	$4,500.00	$99,000.00	EA	22	$5,000.00	$110,000.00
111	Imported Bedding - Type 1 (Pipe)	C.Y.	1,700	$34.00	$57,800.00	C.Y.	1,700	$16.00	$27,200.00
112	Bedding - Type 2 (Trench Stabilization)	C.Y.	260	$34.00	$8,840.00	C.Y.	260	$28.00	$7,280.00
113	Connect New (6" or 8") Main to Existing (6") Main	EA	1	$2,000.00	$2,000.00	EA	1	$775.00	$775.00
114	Fire Hydrant Guard Post Assembly	EA	6	$1,500.00	$9,000.00	EA	6	$950.00	$5,700.00
115	Sampling Station	EA	2	$2,500.00	$5,000.00	EA	2	$2,700.00	$5,400.00
116	Temporary Water	L.S.	1	$15,000.00	$15,000.00	L.S.	1	$40,000.00	$40,000.00
117	Flowable Fill Trench Plug	EA	3	$1,200.00	$3,600.00	EA	3	$800.00	$2,400.00
118	RESERVED				$0.00				$0.00
119	RESERVED				$0.00				$0.00
120	2" Ø Meter (in Fire Hall) and 2" Service Piping	L.S.	1	$12,000.00	$12,000.00	L.S.	1	$9,200.00	$9,200.00
121	Pressure Reducing Station	L.S.	1	$22,000.00	$22,000.00	L.S.	1	$24,000.00	$24,000.00
122	Meter Reading, Software and Training	L.S.	1	$13,000.00	$13,000.00	L.S.	1	$11,500.00	$11,500.00
123	RESERVED				$0.00				$0.00
124	Directional Drilling with 6" or 8" HDPE Pipe	L.F.	240	$100.00	$24,000.00	L.F.	240	$270.00	$64,800.00
125	Auto Air Release Manhole	EA	1	$10,000.00	$10,000.00	EA	1	$2,850.00	$2,850.00
	SCHEDULE 1 TOTAL				**$1,248,746.00**				**$1,204,234.00**

Schedule 2 - Storage Tank

ITEM NO.	ITEM	UNIT	ESTIMATED QUANTITY	UNIT BID PRICE	TOTAL	UNIT	ESTIMATED QUANTITY	UNIT BID PRICE	TOTAL
201	Unclassfield Excavation/Site	L.S.	1	$8,000.00	$8,000.00	L.S.	1	$10,000.00	$10,000.00
202	Foundation	L.S.	1	$45,000.00	$45,000.00	L.S.	1	$48,000.00	$48,000.00
203	150,000 gal Storage Tank	L.S.	1	$180,000.00	$180,000.00	L.S.	1	$210,000.00	$210,000.00
204	Tank Level Control Manhole	L.S.	1	$8,000.00	$8,000.00	L.S.	1	$2,500.00	$2,500.00
205	Inlet Piping (From Wells to Tank) and Valves	L.S.	1	$28,000.00	$28,000.00	L.S.	1	$30,000.00	$30,000.00
206	Outlet Piping (Tank to 1+00)	L.S.	1	$6,500.00	$6,500.00	L.S.	1	$2,500.00	$2,500.00
207	Overflow/Drain Piping and Valve	L.S.	1	$20,000.00	$20,000.00	L.S.	1	$14,000.00	$14,000.00
208	Flow Meter Manhole	L.S.	1	$28,000.00	$28,000.00	L.S.	1	$34,000.00	$34,000.00
209	Security Fence at Storage Tank	L.F.	220	$30.00	$6,600.00	L.F.	220	$30.00	$6,600.00
210	Existing Storage Tank Removal	L.S.	1	$5,000.00	$5,000.00	L.S.	1	$12,500.00	$12,500.00
211	Submersible Mixer	L.S.	1	$18,000.00	$18,000.00	L.S.	1	$17,000.00	$17,000.00
	SCHEDULE 2 TOTAL				**$353,100.00**				**$387,100.00**

Schedule 3 - Pumping (Well House)

ITEM NO.	ITEM	UNIT	ESTIMATED QUANTITY	UNIT BID PRICE	TOTAL	UNIT	ESTIMATED QUANTITY	UNIT BID PRICE	TOTAL
301	Excavation, Grading and Concrete	L.S.	1	$40,000	$40,000.00	L.S.	1	$12,300	$12,300.00
302	Utility Company Electrical Service Upgrade	L.S.	1	$30,000	$30,000.00	L.S.	1	$2,500	$2,500.00
303	Masonry Install	L.S.	1	$40,000	$40,000.00	L.S.	1	$43,500	$43,500.00
304	Building Roof, Interior, Doors and Painting	L.S.	1	$30,000	$30,000.00	L.S.	1	$16,200	$16,200.00
305	General Electrical	L.S.	1	$50,000	$50,000.00	L.S.	1	$17,000	$17,000.00
306	SCADA, Control and Webcast	L.S.	1	$70,000	$70,000.00	L.S.	1	$105,000	$105,000.00
307	Heating	L.S.	1	$4,000	$4,000.00	L.S.	1	$2,000	$2,000.00
308	RESERVED				$0.00				$0.00
	SCHEDULE 3 TOTAL				**$264,000.00**				**$198,500.00**

Schedule 4 - Surface Restoration and Miscellaneous

ITEM NO.	ITEM	UNIT	ESTIMATED QUANTITY	UNIT BID PRICE	TOTAL	UNIT	ESTIMATED QUANTITY	UNIT BID PRICE	TOTAL
401	Mobilization, Bonding, Insurance	L.S.	1	$8,000.00	$8,000.00	L.S.	1	$148,000.00	$148,000.00
402	Layout and Construction Staking	L.S.	1	$8,500.00	$8,500.00	L.S.	1	$36,000.00	$36,000.00
403	Traffic Control	L.S.	1	$5,000.00	$5,000.00	L.S.	1	$12,500.00	$12,500.00
404	Record Documents	L.S.	1	$3,500.00	$3,500.00	L.S.	1	$19,500.00	$19,500.00
405	Exploratory Excavation	H.R.	30	$185.00	$5,550.00	H.R.	15	$165.00	$2,475.00
406	Culvert Replacement (with Distribution)	L.F.	200	$25.00	$5,000.00	L.F.	200	$42.00	$8,400.00
407	Asphalt and BC Gravel Restoration (3"/10")	S.Y.	1927	$50.00	$96,350.00	S.Y.	1932	$30.00	$57,960.00
408	Tank Access Roadway (4" depth)	S.Y.	3413	$7.00	$23,891.00	S.Y.	3413	$9.00	$30,717.00
409	Gravel Surface Restoration (6" depth)	S.Y.	1400	$9.00	$12,600.00	S.Y.	4975	$12.00	$59,700.00
410	Geotextile Stabilization Fabric	S.Y.	1400	$2.00	$2,800.00	S.Y.	1400	$2.50	$3,500.00
411	Gravel Fill (Pit-Run)	C.Y.	168	$25.00	$4,200.00	C.Y.	168	$29.00	$4,872.00
412	Dryland Seed Restoration	L.S.	1	$4,000.00	$4,000.00	L.S.	1	$5,000.00	$5,000.00
413	Culverts and Tank Hill	L.S.	1	$1,500.00	$1,500.00	L.S.	1	$1,500.00	$1,500.00
414	Lawn Sod Restoration	S.Y.	487	$10.00	$4,870.00	S.Y.	620	$16.00	$9,920.00
415	Concrete Slab	S.Y.	100	$50.00	$5,000.00	S.Y.	50	$90.00	$4,500.00
416	Existing Sewer Drain or Drainfield Pipe Repair	L.F.	400	$30.00	$12,000.00	L.F.	200	$18.00	$3,600.00
	SCHEDULE 4 TOTAL				**$202,761.00**				**$408,144.00**
				CONSTRUCTION TOTAL	**$2,068,607.00**			**CONSTRUCTION TOTAL**	**$ 2,197,978.00**

SECTION II
2.1 BID FORM

OWNER: The Montana Department of Environmental Quality (DEQ)

CATEGORY OF IMPROVEMENTS: Mine Reclamation

CONTRACT TITLE: Sand Coulee Water System Replacement Project

CONTRACT NUMBER: DEQ Contract No. 414006

ASSURANCES BY BIDDER:

In presenting this Bid, the undersigned Bidder expressly (1) makes the following assurances and representations, (2) acknowledges that the DEQ may rely on these assurances and representations by Bidder and (3) acknowledges that, in the event Bidder is awarded the Contract for the Work contemplated herein, these representations will become part of the Agreement between Bidder and Owner for the performance of the Work. Terms used herein will have the meanings set forth in the definitions appearing in the General Conditions of the Contract.

1. The undersigned Bidder has familiarized itself with the nature and extent of the Contract Documents; Work; locality; all local conditions; and federal, state and local laws, ordinances, rules, and regulations; that in any manner may affect cost, progress, or performance of the Work.

2. Bidder has studied carefully all reports of investigations and tests of subsurface and latent physical conditions at the site or otherwise affecting cost, progress, or performance of the Work which were relied upon by Engineer in the preparation of the Drawings, Special Provisions and Technical Specifications and which have been identified in the Drawings, Special Provisions, and Technical Specifications (and/or attachments thereto).

3. Bidder has made or caused to be made such examinations, investigations, and tests and studies of such reports and related data in addition to those referred to in the above paragraph as are necessary for the performance of the work at the Contract Price within the Contract Times and in accordance with the other terms and conditions of the Contract Documents; and no additional examinations, investigations, tests, reports, or similar data are or will be required by Bidder for such purposes.

4. Bidder has correlated the results of all such observations, examinations, investigations, tests, reports, and data with the terms and conditions of the Contract Documents.

5. Bidder has given Engineer written notice of any conflict, error, or discrepancy that Bidder has discovered in the Contract Documents and the written resolution thereof by Engineer is acceptable to Bidder.

6. Bidder agrees that the Contract Documents are sufficient in scope and detail to indicate and convey understanding of all terms and conditions for performance of the Work. Bidder acknowledges that it has adequate information, independently verified by Bidder, to prepare and offer this Bid.

7. Bidder has prepared this bid and stands prepared to perform the Work in accordance with all terms and conditions of the Contract Documents and all applicable laws and regulations regarding performance of the Work, including without limitation, wage and hour requirements, health and safety requirements,

equal employment opportunity and nondiscrimination requirements and those requirements specifically discussed in detail in Part II of the Supplementary Conditions (and attachments).

8. Bidder agrees that this Bid will be good and cannot be withdrawn for a period of thirty (30) calendar days after the actual date of the Bid opening.

9. Bidder further certifies: that the only persons or parties interested in this Bid as principals are as stated herein; that at least 50% of the work will be performed by bona fide Montana residents as defined in Section 18-2-401, MCA; that Subcontractors will perform less than 50% of the work; that the Bid is made without any collusion, as defined by state and federal anti-trust laws, with other persons, firms, or corporations; and that the Bid is made upon the Bidder's independent price determination.

10. The Bidder acknowledges receipt of addenda numbered (mark "N/A" if no addenda were issued):

one, two & three

11. Bidder has completed the Bidders Questionnaire and Ownership Information. Bidder has attached a copy of its current Montana Certificate of Bidder Registration to the Bid Form. Failure to provide all requested information may result in a determination that the Bidder is not a responsive or responsible Bidder and is a basis for Owner to reject the Bid under Article 11, Instructions to Bidders.

12. Time is of the essence in completing the Project. Should Bidder fail to complete the Work within the Contract Time, as adjusted in accordance with the terms of the Contract Documents, it will be charged the sum of Twelve Hundred and Fifty ($1,250.00) dollars per day for each day beyond the Contract Time that the Work is not substantially complete.

13. In accordance with the above understanding, and under the terms and conditions set out in the Instruction to Bidders, the undersigned proposes to furnish all materials and perform the Work within the Contract Time of **one hundred twenty five (125) consecutive calendar days,** complete in its entirety in the manner and under the conditions required in the Contract Documents, at the price listed herein as Total Contract Price. This price covers all expenses to be incurred in performing the Work required under the Contract Documents, of which this Bid Form is a part. Amounts are shown in both words and figures, where indicated. In case of discrepancy, the amount shown in words will govern.

The Total Contract Price includes all labor, equipment, materials, mobilization, overhead, profit, insurance, and incidentals required to complete the Work.

Specified bond and insurance costs:

1. The Total Contract Price includes the following sums for 100 percent Payment and Performance Bonds:

_____ Dollars ($_____)

2. The Total Contract Price includes any necessary sums for pollution liability insurance premiums. If pollution liability insurance premium is to be paid separately for the Work at this site, the amount of the separate premium is:

_____ Dollars ($_____)

SECTION II
2.1 BID FORM

Coverage period: (a) annual ✓, or (b) other (specify) _____.

(The information requested above is simply for Owner to determine the fiscal impact of specific requirements of the contract. Owner's request for this additional information is not to affect Bidder's Total Contract Price.)

SECTION II
2.1 BID FORM

SCHEDULE #1: WATER DISTRIBUTION

Item No.	Est. Quantity	Unit	Name of Pay Item with Unit Bid Price Written in Words	Unit Bid Price	Amount Bid
101	8,957	L.F.	8" PVC C-900, CL200		
at	fifty-four			Per L.F./ 54.00	$483,678
102	22	EA	8" Gate Valve		
at	one thousand seven hundred			Per EA/ 1,700	$37,400
103	847	L.F.	6" PVC C-900, CL200 (FH mains)		
at	forty-eight			Per L.F./ 48.00	$40,656
104			RESERVED		
at				Per /	$
105	1,600	L.F.	¾" Water Service Line (HDPE IPS SIDR7) and Future Stub		
at	thirty-five dollars			Per L.F./ 35.00	$56,000
106	67	EA	¾" Water Service Connect to New Main		
at	four hundred forty-five			Per EA/ 445	$29,815
107	78	EA	¾" Curb Stop and Box		
at	Six hundred eighty-five			Per EA/ 685	$53,430
108	89	EA	¾" Water Service Connect to Existing Service Line		
at	four hundred fifty			Per EA/ 450	$40,050
109	78	EA	5/8" x ¾" Meter (and Meter Pit Installation)		
at	nineteen hundred fifty			Per EA/ 1,950	$152,100
110	22	EA	Fire Hydrant Assembly		
at	five thousand			Per EA/ 5,000	$110,000
111	1,700	C.Y.	Imported Bedding – Type 1 (Pipe)		
at	Sixteen dollars			Per C.Y./ 16.00	$27,200

SECTION II
2.1 BID FORM

Item No.	Est. Quantity	Unit	Name of Pay Item with Unit Bid Price Written in Words	Unit Bid Price	Amount Bid
112	260	C.Y.	**Bedding – Type 2 (Trench Stabilization)**		
at	twenty-eight		Per C.Y./	28.00	$7,280
113	1	EA	**Connect New 8" Main to Existing 6" Main**		
at	seven hundred seventy-five		Per EA/	775	$775
114	6	EA	**Fire Hydrant Guard Post Assembly**		
at	nine hundred fifty		Per EA/	950	$5,700
115	2	EA	**Sampling Station**		
at	twenty-seven hundred		Per EA/	2700	$5,400
116	1	L.S.	**Temporary Water**		
at	forty thousand		Per L.S./	40,000	$40,000
117	3	EA	**Flowable Fill Trench Plug**		
at	eight hundred		Per EA/	800	$2,400
118			**RESERVED**		
at			Per /		$
119			**RESERVED**		
at			Per/		$
120	1	L.S.	**2" Ø Meter (in Fire Hall) and 2" Service piping**		
at	ninety-two hundred		Per L.S./	9200	$9,200
121	1	L.S.	**Pressure Reducing Station**		
at	twenty-four thousand		Per L.S./	24,000	$24,000
122	1	L.S.	**Meter Reading, Software and Training**		
at	eleven thousand five hundred		Per L.S./	11,500	$11,500
123			**RESERVED**		
at			Per/		$

SECTION II
2.1 BID FORM

124 240 L.F. **Directional Drilling with 8" Fusible PVC Pipe**
at two hundred seventy Per L.F./ 270 $64,800

125 1 EA **Auto Air Release Manhole**
at two thousand eight hundred fifty Per EA/ 2850 $2,850

SCHEDULE #1 WATER DISTRIBUTION AMOUNT (ITEMS 101 TO 125)

1,204,234
(Figure)
one million two hundred four thousand two hundred
(Written in Words) thirty-four dollars

SCHEDULE #2: STORAGE TANK

Item No.	Est. Quantity	Unit	Name of Pay Item with Unit Bid Price Written in Words	Unit Bid Price	Amount Bid
201	1	L.S.	**Unclassfied Excavation/Site** at TEN THOUSAND	Per L.S./ 10,000.	$ 10,000.
202	1	L.S.	**Foundation** at FORTY EIGHT THOUSAND	Per L.S./ 48,000.	$ 48,000.
203	1	L.S.	**150,000 gal Storage Tank** at TWO HUNDRED TEN THOUSAND	Per L.S./ 210,000	$ 210,000.
204	1	L.S.	**Tank Level Control Manhole** at twenty-five hundred	Per L.S./ 2,500	$2,500
205	1	L.S.	**Inlet Piping From Wells to Tank and Valves** at thirty thousand	Per L.S./ 30,000	$30,000
206	1	L.S.	**Outlet Piping (Tank to 1+00) and Valves** at twenty-five hundred	Per L.S./ 2,500	$2,500
207	1	L.S.	**Overflow/ Drain Piping and Valves** at fourteen thousand	Per L.S./ 14,000	$14,000

SECTION II
2.1 BID FORM

208 1 L.S. **Flow Meter Manhole**
at thirty-four thousand Per L.S./ 34,000 $34,000

209 220 L.F. **Security Fence at Storage Tank**
at thirty dollars Per L.F./ 30.00 $6,600

210 1 L.S. **Existing Storage Tank Removal**
at twelve thousand five hundred Per L.S./ 12,500 $12,500

211 1 L.S. **Submersible Mixer**
at SEVENTEEN THOUSAND Per L.S./ 17,000. $ 17,000.

SCHEDULE #2 STORAGE TANK AMOUNT (ITEMS 201 TO 211)

387,100.
(Figure)

THREE HUNDRED EIGHTY SEVEN THOUSAND, ONE HUNDRED DOLLARS
(Written in Words)

SCHEDULE #3: PUMPING (Well House)

Item No.	Est. Quantity	Unit	Name of Pay Item with Unit Bid Price Written in Words	Unit Bid Price	Amount Bid
301	1	L.S.	**Unclassified Excavation, Grading and Concrete** at twelve thousand three hundred Per L.S./	12,300	$12,300
302	1	L.S.	**Utility Company Electrical Service Upgrade** at twenty-five hundred Per L.S./	2,500	$2,500
303	1	L.S.	**Masonry Install** at forty-three thousand five hundred Per L.S./	43,500	$43,500
304	1	L.S.	**Building Roof, Interior, Doors and Painting** at Sixteen thousand two hundred Per L.S./	16,200	$16,200
305	1	L.S.	**General Electrical** at SEVENTEEN THOUSAND Per L.S./	17,000.	$ 17,000.

SECTION II
2.1 BID FORM

306 1 L.S. **SCADA, Control and Webcast**
at ONE HUNDRED FIVE THOUSAND Per L.S./ 105,000 $ 105,000

307 1 L.S. **Heating**
at Two Thousand Per L.S./ 2,000 $ 2,000

308 **RESERVED**
at _____ Per / _____ $ _____

SCHEDULE #3 PUMPING (WELL HOUSE) AMOUNT (ITEMS 301 TO 307)

198,500.
(Figure)

ONE HUNDRED NINETY EIGHT THOUSAND FIVE HUNDRED DOLLARS
(Written in Words)

SCHEDULE #4: SURFACE RESTORATION AND MISCELLANEOUS

Item No.	Est. Quantity	Unit	Name of Pay Item with Unit Bid Price Written in Words	Unit Bid Price	Amount Bid
401	1	L.S.	**Mobilization, Bonding, Insurance** at ONE HUNDRED FORTY EIGHT THOUSAND	L.S./ 148,000.	$ 148,000.
402	1	L.S.	**Layout and Construction Staking** at THIRTY-SIX THOUSAND	Per L.S./ 36,000	$ 36,000
403	1	L.S.	**Traffic Control** at TWELVE THOUSAND FIVE HUNDRED	Per L.S./ 12,500	$ 12,500
404	1	L.S.	**Record Documents** at NINETEEN THOUSAND FIVE HUNDRED	Per L.S./ 19,500	$ 19,500
405	15	H.R.	**Exploratory Excavation** at ONE HUNDRED SIXTY-FIVE	Per H.R./ 165	2475. $ 165

Multiplication error

SECTION II
2.1 BID FORM

Item No.	Est. Quantity	Unit	Name of Pay Item with Unit Bid Price Written in Words	Unit Bid Price	Amount Bid
406	200	L.F.	**Culvert Replacement (w/Distribution)**		
at	forty-two			Per L.F./ 42.00	$ 8,400
407	1932	S.Y.	**Asphalt and BC Gravel Restoration (3"/10")**		
at	thirty			Per S.Y./ 30.00	$57,960
408	3413	S.Y.	**Tank Access Roadway (4" depth)**		
at	nine dollars			Per S.Y./ 9.00	$30,717
409	4975	S.Y.	**Gravel Surface Restoration (6" depth)**		
at	twelve dollars			Per S.Y./ 12.00	$59,700
410	1400	S.Y.	**Geotextile Stabilization Fabric**		
at	two dollars and fifty cents			Per S.Y./ 2.50	$3,500
411	168	C.Y.	**Gravel Fill (Pit-run)**		
at	twenty-nine dollars			Per C.Y./ 29.00	$4,872
412	1	L.S.	**Dryland Seed Restoration**		
at	five thousand			Per L.S./ 5,000	$5,000
413	1	L.S.	**Culverts at Tank Hill**		
at	fifteen hundred			Per L.S./ 1,500	$1,500
414	620	S.Y.	**Lawn Sod Restoration**		
at	Sixteen dollars			Per S.Y./ 16.00	$9,920
415	50	S.Y.	**Concrete Slab**		
at	ninety dollars			Per S.Y./ 90.00	$4,500
416	200	L.F.	**Existing Sewer Drain or Drainfield Pipe Repair**		
at	eighteen dollars			Per L.F. 18.00	$3,600

SECTION II
2.1 BID FORM

SCHEDULE #4 SURFACE RESTORATION AND MISCELLANEOUS AMOUNT (ITEMS 401 TO 416)

~~405,034~~ – 408,144
(Figure)

Four Hundred - Five Thousand Eight Hundred - Thirty - four Dollars
(Written in Words)

TOTAL COMBINED SCHEDULE #1, 2, 3 and 4 AMOUNT

2,197,978.00
~~2,195,668~~ –
(Figure)

Two Million One Hundred - Ninety five Thousand Six Hundred Sixty - Eight Dollars
(Written in Words)

SECTION II
2.1 BID FORM

Contractor Registration Number / Effective Date: _____
[Attach copy of current Certificate of Contractor Registration(s) to Bid Form].

Signature of Bidder

If an individual: _____, doing business as _____

_____

Date: _____

If a Partnership: _____

by _____, partner

_____

Date: _____

If a Corporation: Ed Boland Construction (name of Corporation)

(a general business Corporation)

by _____

Title President (SEAL AND ATTEST)

Date: 07/08/2014

Jodi R. Donnelly Office Mgr.

Business Address of Bidder: 4701 N. Star Blvd
Great Falls MT 59405

Email: office@bolandconstruction.net

Telephone No(s): 406-761-1063

Fax Number: 406-761-1076

Tax ID Number: 81-0430079

If Bidder is a joint venture, other party must sign the Bid and provide the same information (set forth above).

DEQ ORIGINAL

NOTICE OF AWARD

TO: Ed Boland Construction, Inc.
4701 North Star Blvd.
Great Falls, MT 59405

DATE: July 21, 2014

PROJECT: Sand Coulee Water System Replacement Project

DEQ Contract No.: 414006

PROJECT DESCRIPTION: This project includes installing a new water storage tank, a new well house, replacing existing water distribution with new water distribution pipe and water services, valves, fire hydrants, new water meters and pits, and gravel, asphaltic and grass surface restoration.

The Owner has considered the Bid submitted by you for the above-described Work in response to its Invitation for Bid dated June 3, 2014 and Instructions to Bidders.

You are hereby notified that your bid has been accepted for items in the amount of $2,197,978.00.

Within five (5) days after receipt of this Notice of Award (Saturdays, Sundays and legal holidays excluded) or as Owner and Contractor otherwise mutually agree, you are required (Article 13, Instructions to Bidders) to execute and deliver to Owner a copy of the Acceptance of Notice of Award, all executed copies of the Agreement and the properly issued and effective Performance and Payment Bonds, Certificates of Insurance and copies of applicable insurance policies.

If you fail to execute said Agreement and to furnish said Bonds and Insurance within five (5) days from the date of this Notice, said Owner will be entitled to consider all your rights (arising out of the Owner's acceptance of your Bid) as abandoned and to forfeit your Bid Bond. The Owner will be entitled to exercise such other and further rights as may be granted by law.

Please return an acknowledged copy of this Notice of Award to the Owner.

RECEIVED BY DEQ FINANCIAL SERVICES 2014 JUL 30 AM 9:39

Dated 21st day of July 2014.

OWNER: DEPARTMENT OF EVIRONMENTALQUALITY

By: for Tom Henderson

Title: Pgm. Division Administrator

ACCEPTANCE OF NOTICE OF AWARD

Receipt of the above Notice of Award is hereby acknowledged this 29 day of July, 2014.

CONTRACTOR: ED BOLAND CONSTRUCTION, INC.

By:

Title: PRESIDENT

APPENDIX A-4

NCI Engineering Co.
4509 North Star Boulevard
P.O. Box 6350
Great Falls, MT 59406

Phone (406) 453-5478
Fax (406) 453-2009

**** Items discusses during the meeting.***

PRECONSTRUCTION CONFERENCE MINUTES

PROJECT: Sand Coulee Water System Replacement

OWNER: Montana Department of Environmental Quality (Sand Coulee Water District)

ENGINEER: NCI Engineering/ Hydrometrics

CONTRACTOR: Boland Construction

DATE August 21, 2014

TIME: 10:30 a.m.

LOCATION: SC fire hall

1. INTRODUCTION: Sign-in Sheet

- Please sign the attendance sheet, and include contact information.
- If you have business cards, please distribute to others.
- If you are aware of others who should receive minutes of this meeting, please inform NCI.

2. OFFICIAL REPRESENTATIVES

	Name	Title	Organization	Phone No.	Email
District:	Kent Luoma	District President	District	406-590-5183	
Engineers:	Ralph McGillivray	Engineer/Inspector	NCI Engineering, Co.	406-453-5478	ralphm@nciengineering.com
	Idaho Trenberth	Project Inspector	NCI Engineering, Co.	406-453-5478	idahot@nciengineering.com
	or Jake Neil	Project Engineer	NCI Engineering, Co.		jaker@nciengineering.com
Contractor:	Barry Boland	Project Manager	Boland	406-799-4761	barry@bolandconstruction.net
	Steve Carlson	Project Super (field)	Boland	406-799-2786	steve@bolandconstruction.net
DEQ/AML:	Tom Henderson		DEQ/AML	841 5052, 431 2753	THenderson@mt.gov>

Any corrections needed?

Utility Contacts/Coordination:

	One Call	1-800-424-5555	
Joel Demko	Northwestern Energy	406-454-7113	joel.demko@northwestern.com
Jason Petrillo	Three Rivers telephone	406-467-4305	jason.petrillo@3rivers.coop

Others?

3. OWNER'S (DEQ) RESPONSIBILITIES

- Process pay requests **Barry gave #1 request. Invoices for material stored was in package, Tom would review but specifications stated only installed items were eligible for payment. Time to cut field quantities each month will be the 21st. Best to have Boland's super and NCI inspector to agree on quantity in field first then a formal pay request will go to NCI, then NCI will give to Tom (DEQ). Tom has 30 days to review and send out check. Tom said he can usually respond quicker. Note Tom did email after meeting that he did check with staff attorney on the payment for stored material and Attorney said he did not see any give in the General conditions on this matter.*
- Review and concur change orders **Tom said NCI may need to do work directives also*
- Attend progress meetings **Kent said he would try and be there as did Tom*
- Participate in finalization of project

4. CONTRACTOR'S RESPONSIBILITIES

- Perform work as specified. Adhere to the provisions of the contract.
- Coordinate with subcontractors and suppliers.
- Conform to prevailing wage rates. (Article 16 – Instructions to Bidder)
- Timely submission of required information.
- Contractor is responsible for quality control of all work items.
- Laboratory and field testing. (NCI is performing density testing of backfill and surfacing). NCI needs proctors from Boland.
- Daily reports/ Monthly reports – Special Condition Art 21. "i.e. work done that day, manpower and equipment, subcontractors, quantities installed by bid schedule numbers".
- Progress meetings. Set up for weekly to begin with; but maybe have every 2 weeks. Need to visit about day of week and time…Location will be at Fire Hall ***first progress meeting will be…*Tuesday 26th at 10:30 AM at Fire Hall. We will try to keep this a constant time and day of week.***
- Contractor and Resident Engineer shall discuss and transfer "as-built" information during each progress meeting.
- Inspector and Contractor to "log" soil layers in profile as excavation proceeds at dry pit.
- Permits – Storm (BMP at Tank Hill), Building…**Scott said he had completed most of these permits and would get copies out to us.*

5. ENGINEER'S (NCI) RESPONSIBILITIES

- **review* pay requests. **DEQ will process *Jody is Boland's pay request person*
- Final project acceptance.
- On-site resident inspection.
- Shop drawing & submittal review.
- Administer progress meetings.
- Partial/Final pay request certification.
- Interpretation of plans and specifications.
- Review change orders.
- All document submittals shall be distributed through NCI Engineering Co.
- Will not supervise contractor's employees, equipment or operations

6. RESIDENT ENGINEER'S (INSPECTOR) RESPONSIBILITIES

- All work to be inspected before being covered or backfilled.
- Maintain daily diary.
- Interpret contract documents/plans. **NCI Inspector will be the first contact for interpretations.**
- Report directly to Project Engineer.

- Review contractor's pay roll reports. **Tom said he would review the process so send him the actual pay roll reports.*

7. GENERAL DISCUSSION OF CONTRACT

A. Contract Documents

B. Addenda
- There was 3 Addendums **includes the Q&A*

C. Completion time for Contract
- 125 consecutive calendar days total for completed and accepted project. See Contractor's proposed schedule.

D. Liquidated Damages/Overtime Inspection Fee
- $1,250 per day (per agreement)
- Overtime Inspection, anything beyond a 8-5

E. EEO Info/Wage Rates
- Wage rates are Montana or Federal Prevailing Wage Rates whichever is higher for all trades, either heavy construction, builder, or highway ***that was in effect at bid time***. ** Boland will post at job shack by PO*.
- Submit certified payroll reports from the prime contractor and subcontractors on a ***(weekly)*** basis. **Tom will define this schedule*

F. Pay Requests/Payment (Tom)
- Engineer/Owner (DEQ) to approve.

Submit pay requests by the **21st day of each* month for Engineer review. *Contractor and inspector will agree on quantities/payment prior to submittal of pay request, *then request will be given to DEQ. Owner (DEQ) will review/approve* ***as received. *Tom has 30 days to review.*** Payments will be monthly on percentage of project completion per bid item. Retainage is 5% until work is satisfactorily completed. Percentage of project completion will be agreed upon between the Engineer and Contractor. **Questions was left on how much time NCI to review*.

G. Change Orders
- Require ***written** notice within 48 hours of perceived change of conditions, and approval by Contractor and Owner. Do not relay a change after several days, this must be done ASAP in order for all to have time to react to the situation.
- Additional Contract Time will be by Change Order only. Increase in Contract Time due to weather will be allowed for "Abnormal Weather Conditions" only. Contractor should anticipate some disagreeable weather conditions and schedule accordingly. Slow down due to weather is not a reason for weather day. Refer to General Conditions.

9. PRELIMINARY AND ADMINISTRATIVE ITEMS

B. Staging Area (seems to be okay).

C. Hours of Work (Special Provisions, Article 23)
- Limits work to normal 8:00 am to 5:00 pm work day and 40 hours per week unless requested and approved otherwise. Superintendent and Inspector will agree on any additional inspection hours (costs) beyond the normal work day/work week on a daily basis and in writing.

D. Submittals
- Section 01300 –Submittals are coming in, need to continue efforts with them.

E. Postings **Scott would do*
- Post statement of wage rates, permits, EEO policy, etc.

F. Notice
- Adjacent and affected property owners. ** try to get the people to tell you if they have septic system in the construction areas*

G. Superintendent/Telephone and Sanitary Facilities.

- Maintain 24 hour per day telephone number (either Contractor's superintendent phone or another person) for weekend/evening emergency. **Boland said for people to call the office phone # 761 1063 after hours and answering service will take message and get a hold of whoever is on call.*

H. Safety
- Responsibility of Contractor, not resident inspector. Need hard hats – careful not to start fire.
- Public safety is a priority. Proper traffic control is necessary to assure public safety**.**
- Contract provisions – Meet all OSHA requirements.

I. Communications (District can have direct contact with contractor when necessary, but inform Engineer of this contact)
- General Contractor to Engineer to Owner and vice versa
- Subcontractor/Supplier to General Contractor to Engineer
- Resident Inspector to Engineer to Owner

J. Existing Condition at Site...need to verify and explore when specified
- Contractor to conduct (per section 01532) site condition survey prior to Notice to Proceed. Survey includes videotape, still photos and notes. This will help save discussion of prior condition after work is completed.
- Contractor is advised to point out any areas of concern.

10. CONSTRUCTION ITEMS

A. Existing Utilities
- Coordinate with all utility companies prior to construction. Utility conflicts are not anticipated, but may require special coordination with various utility companies. The replacement of the existing transformer with new transformer by Northwestern Energy may be biggest item.
- Owner offers their electrical power service at site, Contractor is responsible to acquire.

B. Laying Out Work/Construction Staking
- General Conditions Article 3.03 – Contractor review Contract Documents before starting work. Report any conflicts now

C. Traffic Control
- Adequate traffic control will be necessary. East Hunter and county approval

D. Existing Site
- Need to review easement areas. 20' width is the standard construction easement width, 10' each side of design alignment
- Restoration of existing surfaces – visit about during meeting. * most *existing AC is not in good shape now because it was not much to begin with*

E. Material Disposal
- All waste to be hauled off site and disposed in a legal manner at Contractor's expense.

F. Cleanup
- Contractor shall be responsible for all cleanup within construction schedule and prior to final acceptance.

G. Other Construction Items
- Change to Services locations, I know of three at this time, house 516 near fire station, house 518 above fire hall and house 70 on Dahn's lane.
- **Meter pit location by NCI/Kent, primarily the pit needs to be located off a travel way. All service (or other connection) lines will need to be metered if using water.*
- Also talk about "future water service installs" **the future services will not get a new meter pit, also this is a case by case issue with final approval by Tom.* …also discuss "extra/boot legged" services connected to existing mains. Only the "new metered" services are reconnected. *boot legged water is not reconnect*ed.
- Existing Septic Systems..see special #33 **Kent though we had found problem areas*

- Existing Survey Pins, Surveyor has marked these, and he knows which ones are there, they need to be saved….it cost extra to replace… need to discuss location of fittings by surveyor….if bend is where it is suppose to be, then fine, but if it is moved in field then this is a bigger deal. **Boland need to let NCI if the alignment has changed so surveyor can shot the fitting*
- Pipe Bedding – specified as normally native – but will need to use imported in "rock" areas to protect from point pressures – also use in coal areas…Trench backfill and segregation…install more trench plugs? **Barry said he bid trench plugs to cheap, we said he could form them and use less concrete*.
- All topsoil is imported and has a 6" depth added.
- Exploratory (02221-12) is set up for backhoe/laborer and survey of data. **Exploratory work is payable where existing line was not as shown on plans. Need to get authorization in order to get paid for exploratory.*
- water outage is 4 hours, if longer then you need to set up temporary

11. PROJECT RECORD DOCUMENTS

- Contractor to maintain a set of record drawings clearly noting all construction modifications.

12. QUESTIONS OR CONCERNS ????

**Barry asked about alternative construction with directional drilling for line by existing septic drain field. Note later Scott emailed this question and it was approved to be directional drill*

**Barry said he felt Boland should not have to pay for restoring property pins that will be destroyed due to the pipe line excavation. Replacement of these specific pins should not be his responsibility. We said the intent of the spec was (specification section on layout) states contractor be responsible. Tom would review.*

**Jim Rodgers owns land where tank access is, he was questioning the traffic and conditions of this road. Tom said he wanted to be involved.*

**Barry asked about accessing tank location from up above through the hoots land (Andy/Jake). Kent said he had all ready visited with Hoots. We suggested who ever to get the permission in writing.*

**Barry said he would coordinate with Northwestern Energy and 3-Rivers telephone on service lines to building.*

APPENDIX A-5

7128 Commercial Ave.
Billings, MT. 59101
406.294.4455

Re-Submittals

Project: Sand Coulee Water System Replacement Project

Project Location: Sand Coulee, MT

Supplier: MT Waterworks

Engineer: NCI Engineering Company

General Contractor: Ed Boland Construction, Inc.

WOODFORD

Freezeless IOWA® Yard Hydrant Model Y34 & Y1

IOWA® hydrants are used for filling field spray equipment, cleaning tools and equipment, lawn and garden care, watering livestock - immediate water flow even in sub zero temperatures.

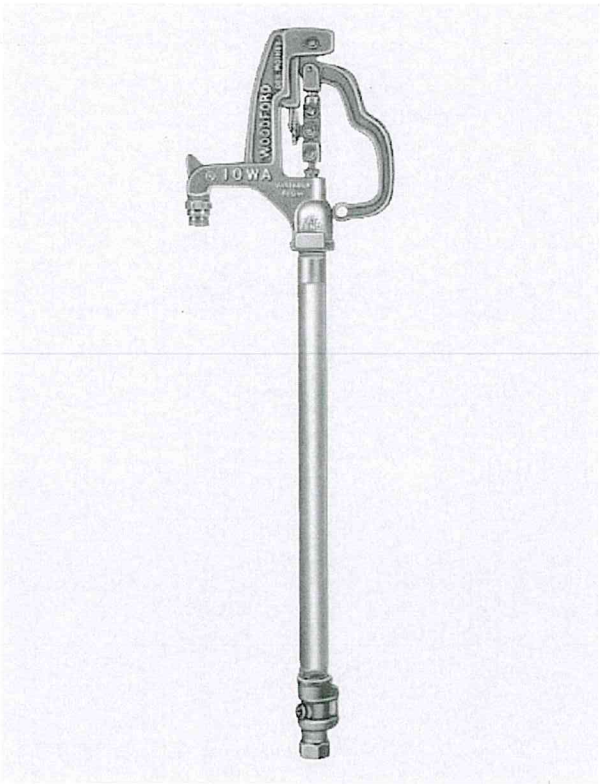

Specifications:

Female Inlet: Model Y34 - ¾" NPT
Model Y1 - 1" NPT

Casing: Model Y34 - 1" Galvanized Steel Pipe
Model Y1 - 1¼" Galvanized Steel Pipe

Operating Rod: ⅜" Galvanized Steel Pipe

Drain Hole: Tapped - ⅛" N.P.T.

Removable Nozzle: ¾" Brass Male Hose Nozzle

Optional At Additional Cost:
1" brass pipe outer casing
⅜" brass pipe operating rod
1" hose nozzle

Features:

- **Adjustable Link** - Provides easy and positive adjustment of the lever lock tension.
- **Rod Guide** - Eliminates side pull on rod, reduces wear on packing, packing nut & stem.
- **Flow Finder and Lock** - A simple cam that can be set to automatically obtain the same flow each time or lock against accidental opening.
- **Long Life Packing** - Graphite packing for lubricity and long life.
- **One Piece Variable Flow Plunger** - Large cushion type seal for longer life - is not easily damaged and assures shut-off even when foreign particles are present. Automatic drain feature - plunger opens drain to prevent freezing - closes at any flow to prevent wasting water.
- **Maintenance & Repair** - Woodford has manufactured the IOWA® hydrant since 1929, and although many improvements have been made through the years, all parts are interchangeable. All repairs can be made from top of unit without removing hydrant from the ground.
- **Maximum Working Pressure:** 125 p.s.i.
- **Maximum Temperature:** 120° F

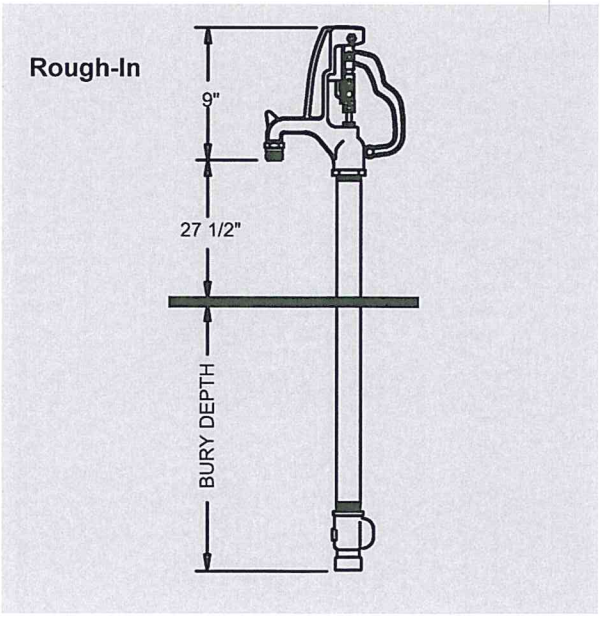

SHIPPING WEIGHT

Bury Depth (Ft)	1	2	3	4	5	6*	7*
Model Y34 (Lbs)	15	17	19	22	24	26	28
Model Y1 (Lbs)	18	20	22	25	28	31	34

*Must ship by truck line due to length.

When ordering, specify model and bury depth.

©2008 WOODFORD Mfg.

Rev. 08/08 Form No. Y34.103

WOODFORD MFG. CO. 06/29 15p VALVES

WOODFORD

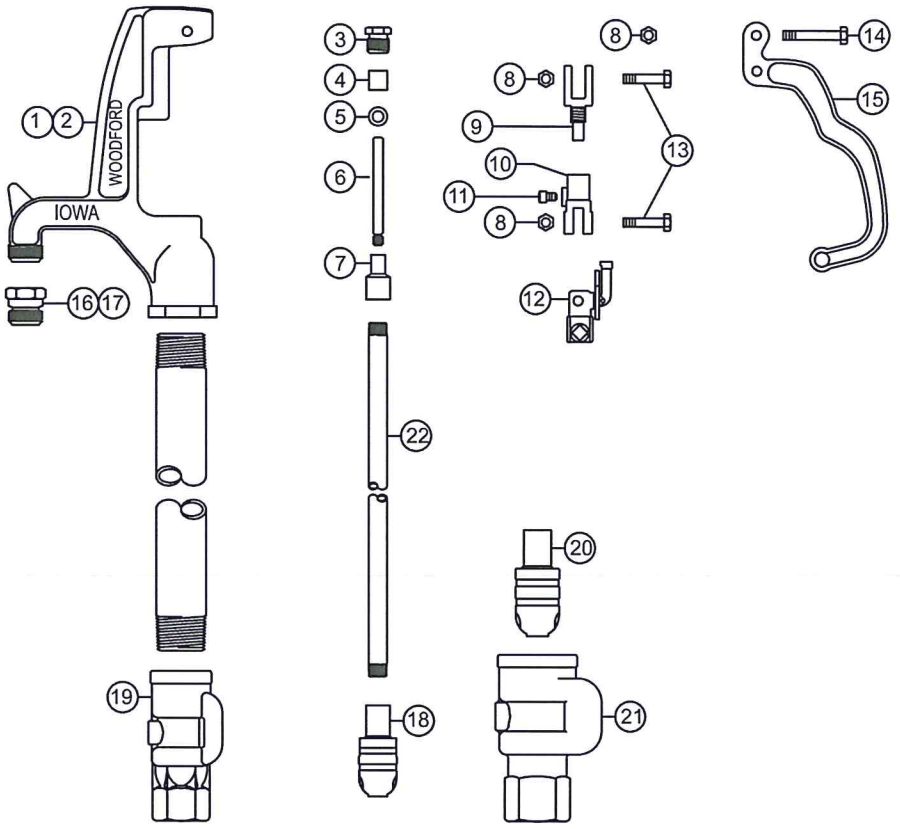

MODEL Y34 & Y1 PARTS LIST

ITEM	PART#	DESCRIPTION
	15003	Y34 Head Assembly (Includes Items 1, 3-16)
	15001	Y1 Head Assembly (Includes Items 2, 3-15 & 17)
1	15004	Y34 Head with 3/4" Nozzle
2	15002	Y1 Head with 3/4" Nozzle
3	10100	Packing Nut
4	10101	Packing
5	10102	Packing Support Washer
6	10104	Brass Rod Stem
7	10011	Reducing Coupling
8	10206	Hex Nut (3)
9	10009	Upper Link
10	15007	Lower Link (Includes Item 11)
11	10019	Set Screw (2)
12	15008	Cam & Clevis Assembly
13	10020	Link Bolt (2)
14	10021	Lever Bolt
15	10008	Lever
16	10004	3/4" Brass Hose Nozzle (Standard)
17	10007	1" Brass Hose Nozzle (Optional)
18	10105	Y34 Plunger
19	10018	Y34 Valve Body (3/4" NPT Inlet)
20	10106	Y1 Plunger
21	10017	Y1 Valve Body (1" NPT Inlet)

ITEM	PART#	DESCRIPTION
22	**Y34 & Y1 OPERATING PIPE (Bury Depth & Length)**	
	10023	1' Bury (35 ½" Long)
	10024	2' Bury (47 ½" Long)
	10025	3' Bury (59 ½" Long)
	10026	4' Bury (71 ½" Long)
	10027	5' Bury (83 ½" Long)
	10028	6' Bury (95 ½" Long)
	10029	7' Bury (107 ½" Long)
	10030	8' Bury (119 ½" Long)
	10089	9' Bury (131 ½" Long)
	10090	10' Bury (143 ½" Long)
	RK-Y34	Repair Kit (Includes Items 3-6 & 18)
	RK-Y1	Repair Kit (Includes Items 3-6 & 20)
	RK-YHL	Repair Kit (Includes Items 8-14)

For more information contact...

WOODFORD MANUFACTURING COMPANY

2121 Waynoka Road, Colorado Springs, Colorado 80915 • **Phone:** (800) 621-6032 • **Fax:** (800) 765-4115

To view our complete product line visit: ***www.woodfordmfg.com*** *or email:* ***sales@woodfordmfg.com***

A Division Of WCM Industries, Inc.

TYLER UNION

27U-BOLTS AND NUTS FOR MECHANICAL JOINTS

*Bolts and Nuts meet ANSI/AWWA C111/A21.11
*ASTM A242 High Strength Low Alloy Steel (Coated or Uncoated)
*ANSI 304 or 316 AISI Stainless Steel (Coated Green or Red)
*Flouropolymer is Fluorokote #1 (Blue for Low Alloy Steel)

NOTES:
1. Dimension "B" is unthreaded shank.
2. Draft, when required to be 6 degree maximum, may be deducted from bolt head dimensions, and radius (B/2) may be changed to suit draft.
3. Gates, if required, may protrude a maximum of 1/8 inch above the top of the bolt head.
4. Chamfer is optional if threads are rolled.

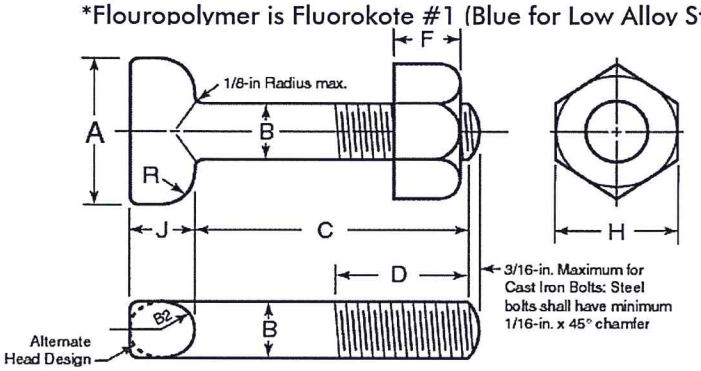

T-Head Low Alloy Weathering and AISI Stainless Steel Fasteners
Dimensions in Inches

Size Inches	A ± 0.05	B +0.030 -0.074	C +0.25 -0.06	D†	Threads per Inch E ††	F	H	J +0.15 -0.03	R Max.
⅝ x 3	1.50	0.625	3.0	2.00	11	0.625 +or -.04	1.062-.04	0.625	0.312
→ ¾ x 3.5	1.75	0.750	3.5	2.50	10	0.750 +or -.06	1.250 -.06	0.750	0.375
¾ x 4	1.75	0.750	4.0	3.00	10	0.750 +or -.06	1.250 -.06	0.750	0.375
¾ x 4.5	1.75	0.750	4.5	3.00	10	0.750 +or -.06	1.250 -.06	0.750	0.375
¾ x 5	1.75	0.750	5.0	3.00	10	0.750 +or -.06	1.250 -.06	0.750	0.375
1 x 6	1.75	1.000	6.0	3.00	8	1.000 +or -.08	1.625 -.08	1.000	0.500
1 x 7.5	2.25	1.000	7.5	4.50	8	1.000 +or -.08	1.625 -.08	1.000	0.625
1-1/4 x 6.5	2.50	1.250	6.5	3.50	7	1.250 +or -.08	2.000 -.08	1.250	0.750
1-1/4 x 8.5	2.50	1.250	8.5	4.00	7	1.250 +or -.08	2.000 -.08	1.250	0.750

The tolerance for cast iron bolts is +or-0.03". If threads are rolled, the body diameter may be reduced to the approximate pitch diameter of the thread.

† Tolerance: +3, - 0 threads †† Number of threads per inch - course-thread series (ANSI/ASME B1.1), Class 2A, course-threads series (ANSI.ASME B1.1), Class 2A, external fit UNC2A and Class 2B, UNC2B (ANSI/ASME B1.2

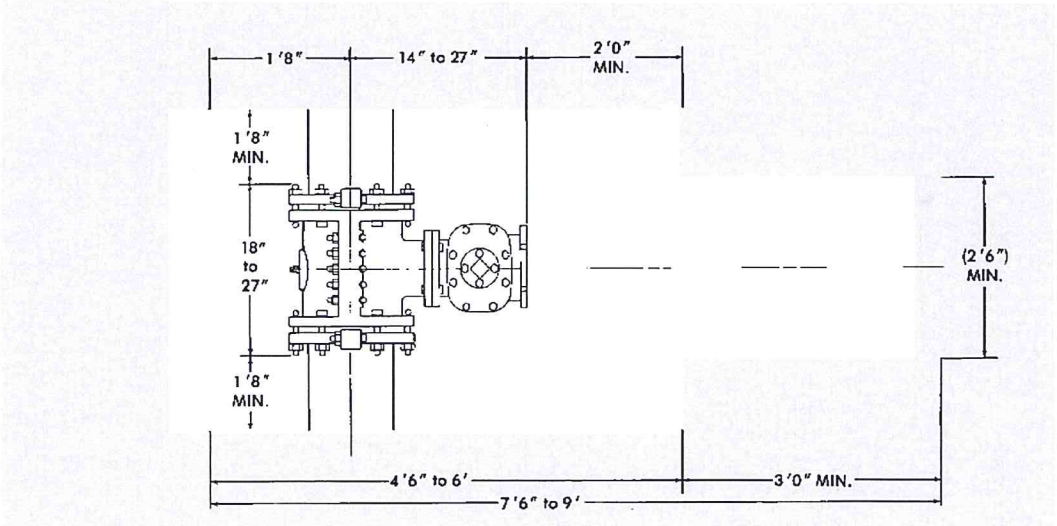

Excavation dimensions - MJ 4" through 12" Tapping Sleeves for Ductile Pipe

TYLER UNION

CAST IRON SERVICE BOXES, ADJUSTABLE

Accommodates 2" through 1¼" curbstops; enlarged base
Accommodates 2" curbstops; 2½" shaft - screw type

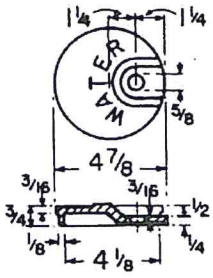

Lid

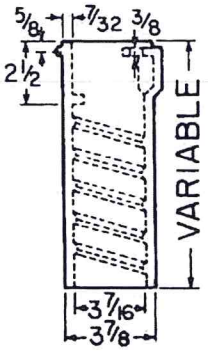

Top

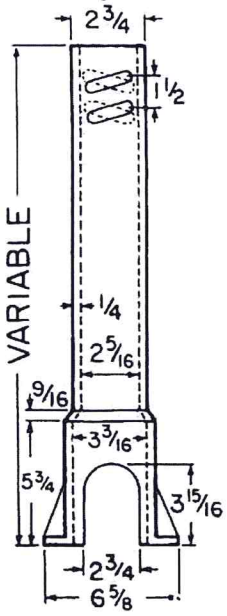

Bottom

6500 SERIES, SCREW TYPE WITH WATER LID

Box (Compoents)	UPCode 67610	Ship Code	Extension In Inches	Weight
89-A (12T & 12B)	146681	S	15-21	20
90-B (12T & 15B)	146742	S	18-24	21
90-C (15T & 15B)	146803	S	21-27	22
91-C (15T & 21B)	146865	S	24-33	24
92-C (15T & 27B)	146926	S	30-39	26
92-D (18T & 27B)	146988	S	30-42	28
93-D (18T & 33B)	147046	S	36-48	32
93-E (24T & 33B)	147114	S	36-54	37
94-E (24T & 39B)	147183	S	42-60	41
95-E (30T & 39B)	147251	S	41-64	44
100-E (24T & 21B & #154 Ext)	147312	S	54-72	50
→ 100-F (30T & 21B & #154 Ext)	147381	S	54-78	53
101-F (30T & 27B & #154 Ext)	147459	S	60-84	55

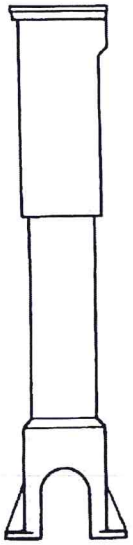

Box Assembled

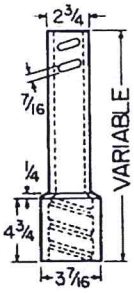

TOP SECTION WITH WATER LID

Item	UPCode 67610	Ship Code	Weight
12T	147510	S	11
15T	147589	S	12
18T	147640	S	14
24T	147701	S	19
30T	147763	S	22

BOTTOM ONLY

Item	UPCode 67610	Ship Code	Weight
12B	144670	S	9
15B	144687	S	10
21B	144694	S	12
27B	144700	S	14
33B	144717	S	18
39B	144724	S	22

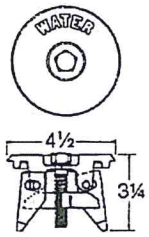

(Old Style) Repair Lid

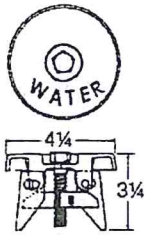

(Outside Cover) Repair Lid

EXTENSION

Item	Height Increase
151	9
152	16
153	28
154	30

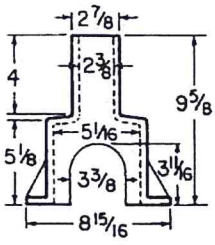

ENLARGED BASE
For 2" Curbstop

Item	Height Increase
6500	6"

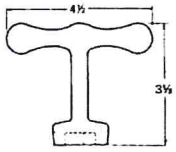

Wrench

Brass Screw Std. WW Pentagon

6500 SERIES PARTS

Item	UPCode 67610	Ship Code	Wt.
151 Ext	144762	S	7.0
152 Ext	144779	5	12.0
153 Ext	144786	S	17.0
154 Ext	144793	S	19.0
Enlarged Base	144809	S	8.0
2½" "Water Lid"	144830	S	1.0
Brass Screw (Std. WW Pentagon)	144816	S	...
Wrench (Std. WW Pentagon)	144908	S	0.5
2½" "Repair Lid Old"	144915	S	4.5
2½" "Repair Lid Outside Cover"	381518	S	4.5

SPECIFIED FITTINGS

164 WEST SMITH ROAD, PO BOX 28157
BELLINGHAM, WA 98228-0157

Toll-free telephone and fax
(888) 734-8846 **(888) 734-8258 (F)**
e-mail: sales@specfit.com

SIGNED DRAWINGS MUST ACCOMPANY PURCHASE ORDER OR DIMENSIONS OF FITTINGS WILL NOT BE GUARANTEED

DISCLAIMER - PLEASE READ

1) All dimensions approximate, subject to change without notice
--Angle tolerance is +/- 2 degrees
--All other dimensions to +/- 1"
2) This drawing only applicable if a copy is referenced at time of order.
--Without a copy of drawing, fitting construction may differ from that shown.
3) Subject to Specified Fittings Standard Terms and Conditions.

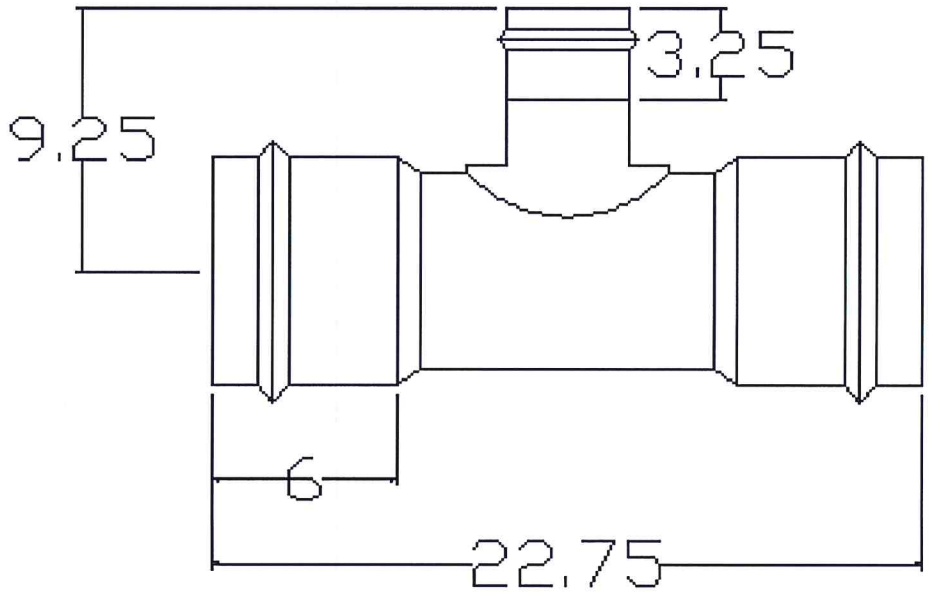

7/29/2014	
Description:	TEE
Material:	PVC DR14, SDR26 CL/160 FULLY RATED
Size:	6" C900 X 3" IPS
Configuration:	GASKET X GASKET X GASKET

DE

SUBMITTAL DATA SHEET

No-Lead Bronze Insert Fittings & Tank Tees
No-Lead Bronze Insert Fittings

72042 - No-Lead Taper Bronze Drop

Dimensions

Size	D	H
1"	1.67	2.50
1 1/4"	2.03	2.50

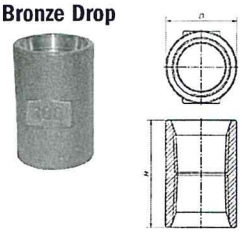

72085 - No-Lead Hydrant Elbow

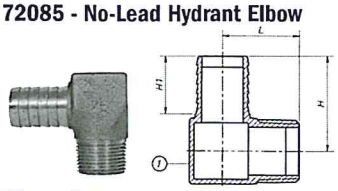

Dimensions

Size	L	H	H1
3/4" x 3/4"	1.41	1.84	1.21
3/4" x 1"	1.48	1.96	1.21
1" x 1"	1.59	1.98	1.21
1 1/4" x 1 1/4"	1.79	2.43	1.41

72086 - No-Lead Rope Adapter

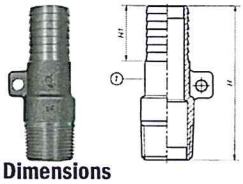

Dimensions

Size	H	H1
1" x 1"	3.92	1.41
1 1/4" x 1"	3.86	1.41
1 1/4" x 1 1/4"	3.90	1.41

72087 - No-Lead Insert Coupling

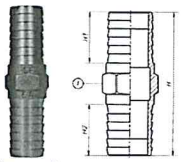

Dimensions

Size	H	H1	H2
1/2" x 1/2"	3.58	1.41	1.41
3/4" x 3/4"	3.58	1.41	1.41
1" x 3/4	3.51	1.41	1.21
1" x 1"	3.39	1.21	1.21
1 1/4" x 1 1/4"	3.39	1.21	1.21
1 1/2" x 1 1/2"	4.50	1.80	1.80
2" x 2"	4.53	1.80	1.80

72088 - No-Lead Female Adapter

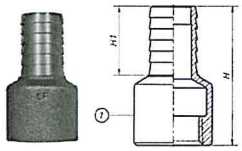

Dimensions

Size	H	H1
1/2" x 1/2"	2.56	1.21
3/4" x 3/4"	2.44	1.21
1" x 1"	2.66	1.21
1 1/4" x 1 1/4"	2.99	1.60
1 1/2" x 1 1/2"	2.85	1.41
2" x 2"	3.31	1.60

72089 - No-Lead Insert Elbow

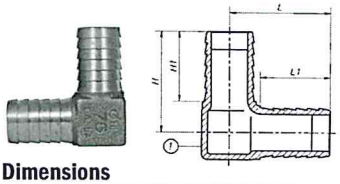

Dimensions

Size	L	L1	H	H1
3/4" x 3/4"	1.74	1.21	1.74	1.21
1" x 1"	1.98	1.21	1.98	1.21
1 1/4" x 1 1/4"	2.43	1.41	2.43	1.41

72090 - No-Lead Hydrant Tee

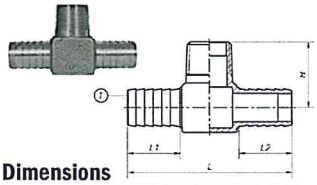

Dimensions

Size	H	L	L1	L2
3/4" x 3/4"	1.49	3.76	1.21	1.21
1" x 3/4"	1.59	4.11	1.41	1.41
1" x 1"	1.60	3.74	1.01	1.01

72091 - No-Lead Insert Tee

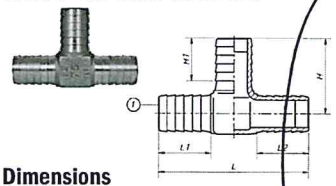

Dimensions

Size	H	H1	L	L1	L2
3/4" x 3/4"	1.74	1.21	3.49	1.21	1.21
1" x 1"	1.88	1.21	3.76	1.21	1.21
1 1/4" x 1 1/4"	2.43	1.41	4.87	1.41	1.41

72092 - No-Lead Male Adapter

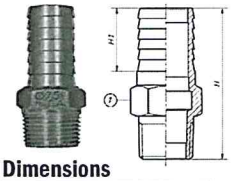

Dimensions

Size	H	H1
1/2" x 1/2"	2.36	1.41
3/4 x 3/4"	2.44	1.41
3/4" x 1"	2.89	1.21
1" x 1"	3.45	1.77
1" x 1 1/4"	3.35	1.60
1 1/4" x 1"	3.27	1.60
1 1/4" x 1 1/4"	2.76	1.41
1 1/2" x 1 1/2"	3.07	1.80
2" x 2"	3.17	1.80

72095 - No-Lead Extra Long Male Adapter

Dimensions

Size	L	L1	H	H1
1" x 1"				
1 1/4" x 1 1/4"				
1 1/2" x 1 1/2"				
2" x 2"				

72099 - No-Lead Elbow -Insert x FNPT

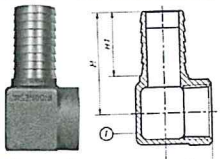

Dimensions

Size	L	H	H1
1" x 1"	1.14	2.79	1.80
1 1/4" x 1 1/4"	1.38	2.54	1.41

SUBMITTAL INFORMATION

- Complies with NSF / ANSI 372-2010

NO-LEAD: The weighted average of the wetted surface of this no-lead product contacted by consumable water contains less than one quarter of one percent (0.25%) lead.

EST. 1856 McDonald

A.Y. McDonald Mfg. Co.
P.O. Box 508
Dubuque, IA 52004-0508

Toll Free: 1-800-292-2737
Fax: 1-800-832-9296
Hours: 7:00 a.m. - 5:00 p.m., CST

sales@aymcdonald.com
www.aymcdonald.com

A.Y. McDonald considers the information on this assembly drawing correct when published. Item and option availability, including specifications, are subject to change without notice.

Submitted by:

CAIN BOLT & GASKET, INC.

HEX BOLT GRADE A

SUBMITTAL SPECIFICATIONS

A307 A

ABSTRACT OF ASTM A307 GRADE A

GRADE: LOW CARBON STEEL 60,000 PSI

CHEMICAL REQUIREMENTS

CHEMICAL ANALYSES SHALL BE PERFORMED IN ACCORDANCE WITH ASTM A751

CARBON MAX	MANGANESE MAX	PHOSPHOROUS MAX	SULFUR MAX
0.29	0.90	0.04	0.15

MECHANICAL REQUIREMENTS

HARDNESS BRINEL		HARDNESS ROCKWELL		TENSILE STRENGTH (KSI).		ELONGATION IN 2in (50 mm)
MIN	MAX	MIN	MAX	MIN	MAX	MIN
121	241	69	100	60	-	16

☐ HEX NUTS ASTM A563 (ASME B18.2.2)	☐ HEAVY HEX NUTS ASTM A563 (ASME B18.2.2)

☐ WASHERS ASTM F844-90

BOLTS AND NUTS MAY BE SUPPLIED

☐ PLAIN	☐ ZINC PLATED	☐ HOT-DIP GALVANIZED	

LOCATION

☐ BURIED	☐ SUBMERGED	☐ ABOVE GRADE	☐ BELOW GRADE	☐ OTHER

DIMENSIONAL DATA: UNLESS OTHERWISE SPECIFIED, THREADS SHALL BE THE COARSE THREAD SERIES AS SPECIFIED IN THE LATEST ISSUE OF ANSI/ASME B1.1,PAGE A-26. HAVING A CLASS 2A TOLERANCE. GRADE A BOLTS SHALL HAVE HEX BOLT DIMENSIONS AS GIVEN IN THE LATEST ISSUE OF ANSI/ASME B 18.2.1, PAGE C1. UNLESS OTHERWISE SPECIFIED GRADE A BOLTS SHOULD BE USE WITH HEX NUTS.

ADDITIONAL INFORMATION: ADDITIONAL INFORMATION CAN BE FOUND IN ASTM A307, DTD 2001, ASTM A563, DTD 2001.

7724 - 7th Avenue South / Seattle, WA 98108 / (206)763-6460 / FAX: (206)763-6878

7128 Commercial Ave.
Billings, MT. 59101
406.294.4455

Submittals

Project:	**Sand Coulee Water System Replacement Project**
Project Location:	**Sand Coulee, MT**
Supplier:	**MT Waterworks**
Engineer:	**NCI Engineering Company**
General Contractor:	**Ed Boland Construction, Inc.**

C900: PVC Pressure Pipe
SPECIFICATION DATA

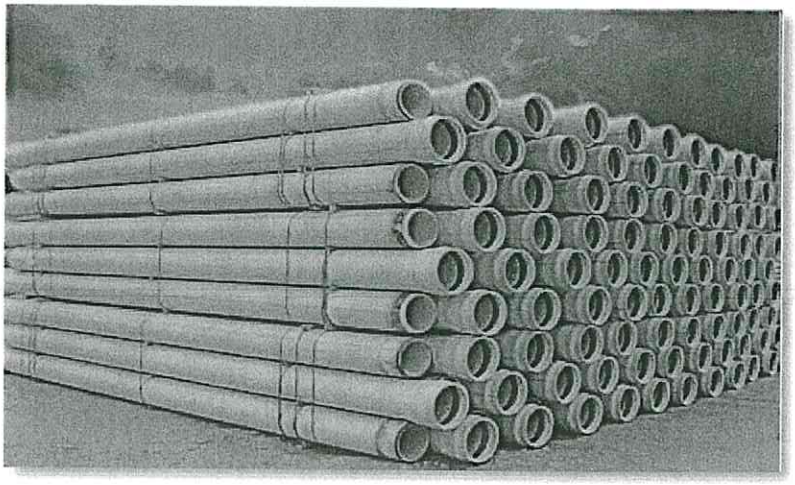

Diamond (C900) PVC Pipe (4" through 12") is made of 12454 compound per ASTM D1784, in accordance with the dimensional, chemical, and physical requirements of AWWA C900.

Diamond (C900) PVC Pipe bears the mark of NSF, International (NSF), the listing of Underwriters Laboratory, Inc. (UL), and (DR14 & DR18) bears the listing of Factory Mutual(FM).

Diamond (C900) PVC Pipe utilizes a gasket, per ASTM F477, to seal the integral bell socket to the spigot of the next joint (which conforms to the requirements of ASTM D3139.) Each male end is beveled to facilitate joint assembly, and the spigot is referenced marked to ensure proper insertion depth. Diamond furnished lubricant is to be used in the joining process.

Diamond C900 is supplied in 20 foot laying lengths.

Physical Properties of PVC 12454:

Property	ASTM Test	Minimum
Specific Gravity	D792	1.40
Tensile Strength, psi	D638	7,000
Tensile Modulus, psi	D638	400,000
IZOD Impact Strength	D256	.65ft., lb./in.

Factory Mutual Systems APPROVED

Underwriter Laboratories Inc.©

SHORT FORM **Specification for Diamond C900 PVC Water Pipe**
Diamond C900 PVC Water Pipe shall be made of compounds conforming to ASTM D1784 with a cell classification of 12454. Diamond C900 shall meet all the dimensional, chemical, and physical requirements as outlined in AWWA C900 and will be supplied in 20 foot laying lengths. Joints shall meet the requirements of ASTM D3139 and shall be formed using Rieber Technology. Gaskets shall meet the requirements of ASTM F477. Potable water pipe shall be manufactured from National Sanitation Foundation (NSF) approved compounds.

DIAMOND PLASTICS® CORPORATION

Corporate Headquarters • 1212 Johnstown Road • P.O. Box 1608 • Grand Island, NE 68802-1608

Reiber Joint Illustration

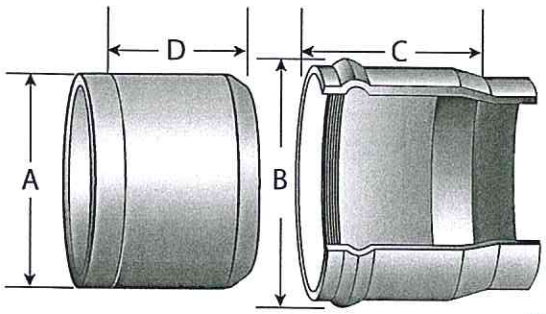

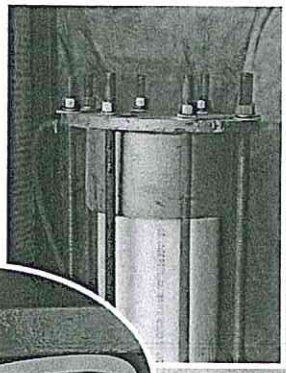

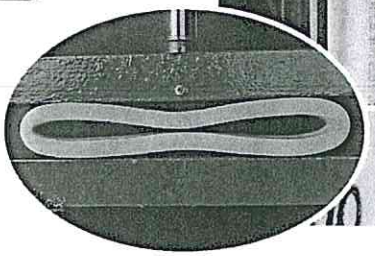

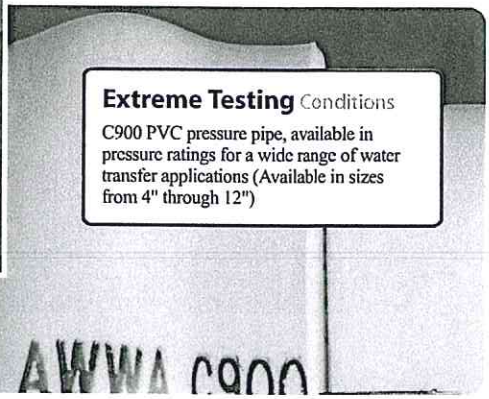

Extreme Testing Conditions

C900 PVC pressure pipe, available in pressure ratings for a wide range of water transfer applications (Available in sizes from 4" through 12")

C900™ AWWA C900 SPECIFICATION DATA — Tough

Nominal Pipe Size	Outside Diameter A Inches (mm)	Bell Diameter B Inches	Approximate Bell Depth C Inches	Spigot Insert Mark D Inches	C900 DR-14 Minimum Wall (t) Inches (mm)	C900 DR-18 Minimum Wall (t) Inches (mm)	C900 DR-25 Minimum Wall (t) Inches (mm)
4" (100)	4.800 (121.9)	6-1/2"	6	5	0.343 (8.71)	0.267 (6.78)	0.192 (4.88)
6" (150)	6.900 (175.3)	9-1/4"	6.5	6	0.493 (12.52)	0.383 (9.73)	0.276 (7.01)
8" (200)	9.050 (229.9)	11-3/4"	7	6.5	0.646 (16.41)	0.503 (12.78)	0.362 (9.19)
10" (250)	11.100 (281.9)	14-1/4"	7.5	7	0.793 (20.14)	0.617 (15.67)	0.444 (11.28)
12" (300)	13.200 (335.3)	16-3/4"	8	7.5	0.943 (23.95)	0.733 (18.62)	0.528 (13.41)

"Possession of this page does not constitute an offer of sale"

DIAMOND PLASTICS® CORPORATION

Corporate Headquarters • 1212 Johnstown Road • P.O. Box 1608 • Grand Island, NE 68802-1608

▸ ASTM D-2241 PRESSURE PIPE | Gasketed Pipe Specifications

Northern Pipe Products ASTM D-2241 IPS Pressure Rated Pipe is manufactured from compounds conforming to cell class 12454 in accordance with ASTM D-1784. Pipe 1.5" through 12" is made with an integral bell joining system which meets ASTM D-3139 and utilizes an elastomeric seal meeting the specification defined in ASTM F-477. Northern Pipe Products Pressure Pipe for potable water carries the NSF Standard 14 and the CSA (Canadian Standards Association) marks of acceptance. It is manufactured in 20' and 40' laying lengths.

▸ ASTM D-2241 GASKETED IPS PRESSURE PIPE | Cell Classification 12454

NOMINAL PIPE SIZE (IN.)	PIPE OUTSIDE DIAMETER (IN.)	SDR-26 (160 PSI)			SDR-21 (200 PSI)			SDR-17 (250 PSI)		
		MINIMUM WALL (IN.)	POUNDS PER FOOT		MINIMUM WALL (IN.)	POUNDS PER FOOT		MINIMUM WALL (IN.)	POUNDS PER FOOT	
			20' LENGTH	40' LENGTH		20' LENGTH	40' LENGTH		20' LENGTH	40' LENGTH
1.5"	1.900"	N/A	N/A	N/A	.090"	.341	.338	.112"	.419 lbs.	.415 lbs.
2"	2.375"	.090"	.436 lbs.	.431 lbs.	.113"	.536	.531	.140"	.656 lbs.	.650 lbs.
2.5"	2.875"	.110"	.639 lbs.	.632 lbs.	.137"	.789	.780	.169"	.962 lbs.	.950 lbs.
3"	3.500"	.140"	.956 lbs.	.944 lbs.	.167"	1.171	1.157	.206"	1.427 lbs.	1.411 lbs.
4"	4.500"	.170"	1.580 lbs.	1.560 lbs.	.214"	1.930	1.910	.265"	2.370 lbs.	2.340 lbs.
5"	5.563"	.210"	2.420 lbs.	2.390 lbs.	.265"	2.970	2.930	.327"	3.620 lbs.	3.570 lbs.
6"	6.625"	.260"	3.440 lbs.	3.390 lbs.	.316"	4.230	4.160	.390"	5.150 lbs.	5.080 lbs.
8"	8.625"	.330"	5.840 lbs.	5.750 lbs.	.410"	7.140	7.030	.508"	8.750 lbs.	8.610 lbs.
10"	10.750"	.410"	9.110 lbs.	8.940 lbs.	.511"	11.160	10.960	.632"	13.650 lbs.	13.400 lbs.
12"	12.750"	.490"	12.820 lbs.	12.650 lbs.	.606"	15.700	15.450	.750"	19.200 lbs.	18.950 lbs.

▸ ASTM D-2241 PRESSURE PIPE | Gasketed Joint Specifications

Northern Pipe Products PVC gasketed IPS Pressure Rated Pipe Water Transmission Pipe is made with gasketed joints conforming to ASTM D-3139 when measured in accordance with ASTM D-2122. Gaskets shall be manufactured to conform to the requirements of ASTM F-477. Northern Pipe Products employs the Rieber Gasket System. The Rieber joining system is a factory made "locked-in" flexible elastomeric seal. The gasket is installed in the bell race during manufacture of the joint. It should not be removed for any reason, destruction of the joint occurs.

▸ LOCKED-IN GASKET JOINT

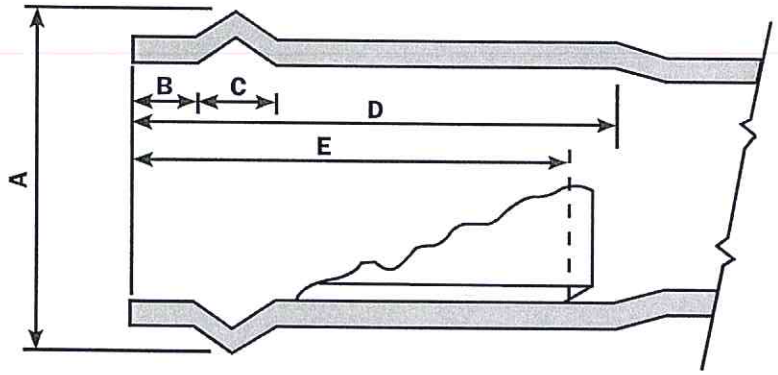

A. Gasket Groove (Race) Outside Diameter
B. Lip Length
C. Gasket Groove (Race) Length
D. Overall Joint
E. Spigot Insertion Depth

NOMINAL PIPE SIZE (IN.)	DIMENSIONS (IN.)				
	(A) GASKET GROOVE (RACE) OUTSIDE DIAMETER	(B) LIP LENGTH	(C) GASKET GROOVE (RACE) LENGTH	(D) OVERALL JOINT	(E) SPIGOT INSERTION DEPTH
1.5"	2.560"	.625"	.820"	4.000"	3.000"
2"	3.090"	.750"	.760"	4.250"	3.250"
2.5"	3.825"	1.000"	1.090"	4.500"	3.500"
3"	4.550"	1.000"	1.160"	4.750"	3.750"
4"	5.650"	1.250"	1.150"	5.750"	4.750"
5"	6.790"	1.250"	1.250"	6.250"	5.250"
6"	8.100"	1.500"	1.375"	6.750"	5.750"
8"	10.350"	1.500"	1.500"	7.250"	6.250"
10"	12.700"	1.750"	1.750"	8.250"	7.250"
12"	14.900"	2.000"	1.900"	9.000"	8.000"

TRUMBULL INDUSTRIES, INC.
Phone: 330.799.3333 | 1040 N. Meridian Rd.
Toll Free: 800.677.1799 | P.O. Box 1556
Fax: 330.797.3215 | Youngstown, Ohio 44501
www.trumbull-mfg.com

DETECTABLE & NON-DETECTABLE WARNING TAPES

FOR LOCATING NON-METALLIC PIPES BURIED UNDERGROUND

Tape consists of an aluminum core encased in plastic. Stocked in 1,000 foot rolls in standard industry colors.

For installations 30" or shallower, 2" wide tape should be used. For deeper installations, 3" tape should be used. Use electronic pipe/cable locators for best results and not valve box or metal locators.

DETECTABLE WARNING TAPES

Buried Line Type	Width	Color	Trumbull Item No.	Roll Length	Weight Per Roll
Water Line	2"	Blue	364-4950	1,000 ft.	4.00 lbs.
Water Line	3"	Blue	364-4955	1,000 ft.	5.80 lbs.
→ Water Line	6"	Blue	364-4966	1,000 ft.	11.80 lbs.
Sewer Line	2"	Green	364-4951	1,000 ft.	4.00 lbs.
Sewer Line	3"	Green	364-4956	1,000 ft.	5.80 lbs.
Sewer Line	6"	Green	364-4967	1,000 ft.	11.80 lbs.
Storm Sewer	2"	Green	364-4965	1,000 ft.	4.00 lbs.
Reclaimed Water	3"	Lavender	364-4958	1,000 ft.	5.80 lbs.
Reclaimed Water	6"	Lavender	364-4968	1,000 ft.	11.80 lbs.
Electrical	3"	Red	364-4970	1,000 ft.	5.80 lbs.

NON-DETECTABLE WARNING TAPES

Buried Line Type	Width	Color	Trumbull Item No.	Roll Length	Weight Per Roll
Water Line	3"	Blue	364-4940	1,000 ft.	5.80 lbs.
Sewer Line	3"	Green	364-4945	1,000 ft.	5.80 lbs.
"Caution" Barricade	3"	Yellow	165-5201	1,000 ft.	2.60 lbs.
"Danger" Barricade	3"	Red	165-5205	1,000 ft.	2.60 lbs.

Copperhead High Strength Tracer Wire

Part# (1430* -HS-)**

***= Color- B=Blue, G=Green, Y=Yellow, P=Purple, R-Red, B=Black, N=Orange**

****=Spool Size- 500', 1000', 2500'**

Tracer wire shall be a #14 AWG HS-CCS high-strength copper clad steel conductor (HS-CCS), insulated with a 30 mil, high-density, high molecular weight polyethylene (HDPE) insulation, and rated for direct burial use at 30 volts. HS-CCS conductor must be a 21% conductivity for locating purposes, Break load 250# minimum. HDPE insulation shall be RoHS compliant and utilize virgin grade material. Insulation color shall meet the APWA color code standard for identification of buried utilities. Tracer wire shall be *Copperhead*™ HS-CCS, HDPE 30 mil insulation or *pre-approved* equal and made in the USA.

PO Box 1081 Monticello, MN 55362 Ph 877-726-5644 Fax 763-271-3694
www.copperheadwire.com

COPPERHEAD INDUSTRIES, LLC

SnakeBite

CORROSION PROOF WIRE CONNECTORS

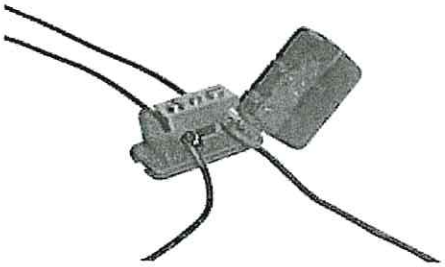

Designed for use with tracer lines, the DryConn® Direct Bury Lug eliminates the need to cut the main line and installs in less than a minute. Instructions: 1. Strip main and tap conductor 2. Place stripped conductor into slotted lug 3. Torque to 35lb-In 4. Repeat on lateral run 5. Remove sealant cover and discard. 6. Close housing, aligning conductors until housing lid is fully latched

PRODUCT SPECIFICATIONS & MEASUREMENTS
Max. Voltage: 50V
Connector Size: 1.138" x 1.285"
Wire Range: #14-10 solid and stranded copper; #12 steel core tracer wire (380 and 1200 pound)
Silicone Sealant Temperature Rating: -45°F to 400°F
Part # 3WB-01 (Blue)
Package quantity - 10

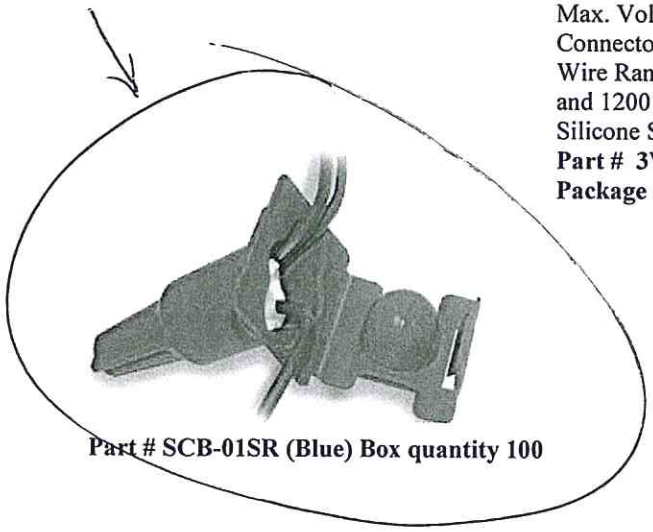

Part # SCB-01SR (Blue) Box quantity 100

Part # SCB-01 (Blue) Box quantity 100

1. Strip wires ½" 2. Align conductors 3. No-pre-twisting needed. Hold stripped wires together with even ends 4. Push wires firmly into connector when starting 5. Twist connector onto wires pushing firmly until tight

PRODUCT SPECIFICATIONS & MEASUREMENTS:
Max. Voltage: 600V (1,000V in fixtures and signs)
Connector Size: 13/16" x 2"
Wire Type: Copper/Copper
Wire Range: Min #22/Max #8
Temperature Rating: 75°C (167°F)
Silicone Sealant: -45°F to 400°F
Max 4- #12 wires

Copperhead Industries, LLC ~ P.O. Box 1081~ Monticello, MN 55362 Ph (877)-726-5644 Fax (763)-271-3694

TRUMBULL INDUSTRIES, INC.
Phone: 330.799.3333 | 1040 N. Meridian Rd.
Toll Free: 800.677.1799 | P.O. Box 1556
Fax: 330.797.3215 | Youngstown, Ohio 44501
www.trumbull-mfg.com

POLYETHYLENE ENCASEMENT TUBING

8 MIL LINEAR LOW DENSITY "POLYWRAP" FOR DUCTILE IRON PIPE

TRUMBULL POLYETHYLENE ENCASEMENT TUBING protects metallic pipe in corrosive soils.

The tubing is slipped over the pipe, extended and taped. An overlap of approximately two feet should be figured in calculating the total polywrap required. For example, about 20 feet of polywrap is required for each 18 foot length, or 22 feet for each 20 foot length.

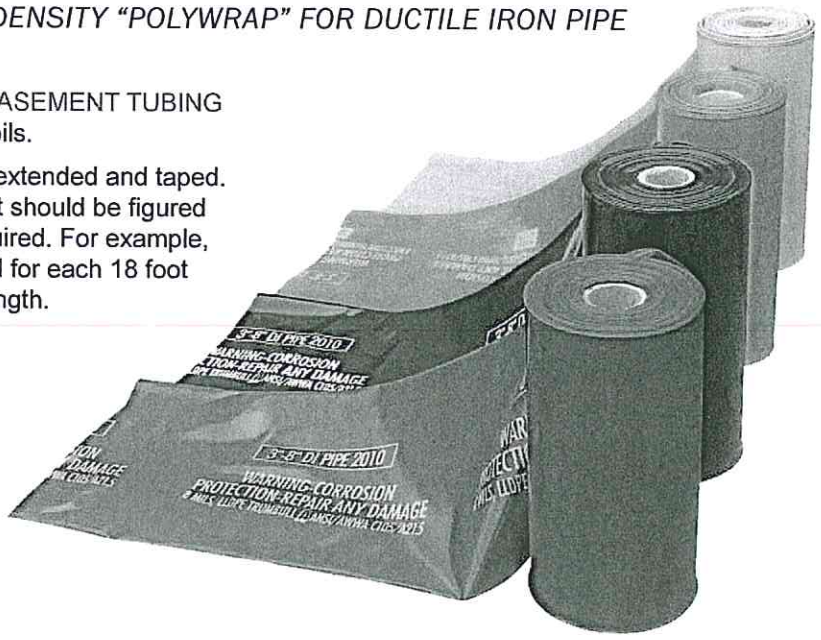

Made in the USA

Made per ANSI/AWWA C105/A21.5-10

BLACK POLYWRAP

Pipe Size	Layflat Width	Weight lbs./ft.	Continuous		Perforated at 20 ft.		Perforated at 22 ft.		Tape Rolls Needed Per 1,000'
			Trumbull Item No.	Roll Length	Trumbull Item No.	Roll Length	Trumbull Item No.	Roll Length	
3"-6"	16"	0.106	388-9989	300 ft.	388-9942	300 ft.	388-9961	308 ft.	3
→ 3"-8"	20"	0.132			388-9943	300 ft.			3
10"	24"	0.159	388-9993	300 ft.	388-9945	300 ft.	388-9951	308 ft.	4
10"-12"	27"	0.179			388-9952	300 ft.	388-9962	308 ft.	4
14"-16"	34"	0.225	388-9996	300 ft.	388-9955	300 ft.	388-9966	308 ft.	6
18"-20"	41"	0.271	388-9998	300 ft.	388-9957	300 ft.	388-9969	308 ft.	7
24"	54"	0.358	388-9999	150 ft.	388-9958	160 ft.	388-9970	154 ft.	8
30"	67"	0.444	388-9985	150 ft.	special order*		special order*		10
36"-42"	81"	0.536	388-9986	150 ft.	special order*		special order*		15
48"	95"	0.629	388-9980	150 ft.	special order*		special order*		17
54"-60"	108"	0.715	388-9982	150 ft.	special order*		special order*		20
64"	121"	0.801	388-9984	150 ft.	special order*		special order*		21

* Indicates other sizes, types and colors that are available as "special order"; 4000# minimum per color, or size. See Price List for current sizes, colors & configurations stocked. 4 mil cross-laminated Polwrap also available.

Polywrap continues on the following page . . .

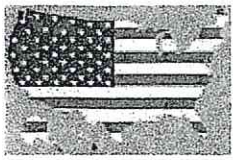

TYLER UNION®
Quality Waterworks Products

Address: 1501 W. 17th. Street – Anniston, AL 36201
Telephone No.: (800) 226-7601
Fax Number: (800) 226-0806

"Buy America(n)"•Certificate of Compliance

Date: 06-04-2014

To: Whom It May Concern

Re: Buy America /Buy American Certification for Tyler Union Waterworks Made in the U.S.A Products

We appreciate the opportunity to supply our products for your projects requiring to some or full extent product that is substantially or wholly manufactured in the U.S.A. Tyler Union Waterworks certifies that its Domestic manufactured fittings and cast iron municipal castings are wholly manufactured in the U.S.A. using only raw materials that wholly originate in the U.S.A..

After a thorough review of "Buy America/Buy American" acts; Tyler Union certifies that our Domestic ANSI/AWWA fittings and ASTM cast iron municipal castings meet all applicable requirements and provisions as provided by the U.S. Department of Transportation and the Federal standards noted for domestic iron and steel construction materials incorporated into your project. These standards/laws/acts and revisions date from 1933 through current year 2014.

Buy American:

- American Recovery and Reinvestment Act of 2009 (ARRA), Section 1605
- Federal Aviation Administration (FAA), 49 U.S.C. § 50101
- Consolidated Appropriations Act, 2014, H.R. 3457 Division G, Title IV, Sec. 436 (a)(1)
- Federal Water Pollution Control Act, 33 U.S.C. 1381 et seq.
- Safe Drinking Water Act Section 1452, 42 U.S.C. 300j-12
- Consolidated Appropriation Act 2014 section 436 American Iron and Steel (AIS) for CWSRF and DWSRF

Buy America:

- Federal Highway Administration (FHWA), 23 U.S.C. § 50101§ 313 – Buy America; 23 C.F.R. § 635.410
- Federal Railroad Administration (FRA), 49 U.S.C. Chapters 244, 246: § 24405 – Buy America
- National Railroad Passenger Corporation (AMTRAK), 49 U.S.C. § 24305
- Federal Transit Administration (FTA), 49 U.S.C. § 5323(j); 49 C.F.R. Part 661 (Buy America Requirements)

If your domestic material project requires additional certifications as provided; you must advise the Tyler Union Waterworks product Distributor or Customer Service Agent upon order placement. Additional certifications available include **1)** mill certification, **2)** project and/or product specific certificate for accessories, and **3)** coating certificate. Our purchase order system maintains purchase and shipping order information for a minimum of 12 months. For tracking purpose these orders indicate if the product processed and shipped was domestic in origin.

Tyler Union certifies its 2" through 48" Domestic ANSI/AWWA fittings are cast with tested and traceable ASTM A536 compliant ductile iron that is designed for use with and conforms to the all the applicable terms and requirements of ANSI/AWWA C153/A21.53, ANSI/AWWA C151/A21, ANSI/AWWA C115/A21, ANSI/AWWA C111/A21.11, ANSI/AWWA C116/A21.16, ANSI/AWWA C110/A21.10, ANSI/AWWA C104/A21.4. Additionally Tyler Union certifies its Domestic made in the U.S.A. cast iron municipal products (Valve Box, Service box, and Accessories) that are produced in accordance with and meet all applicable terms and provisions of ASTM-A48. I certify that all the steel and iron products meet the "Buy America" material certification (23 CFR 635.410, as amended). Current revisions apply for each noted standard.

Best Regards,

Ajay Roy
Engineering and Quality Manger
Tyler Union Waterworks
Email: ajay.roy@tylerunion.com
Tel.: (800) 226-7601

CC:-

Project Name: _____
Project Location: _____
Project Material: _____
_____
Location of Mfg.: Tyler Union Foundry, Anniston, AL 36201
Project Contractor: _____
T/U Distributor: _____
Project No.: _____

Subscribed and sworn to before me this 28nd day of May 2014

Kathy Knight – Notary Public – Calhoun County, AL

Tyler Union Waterworks Contact Information

Tyler: 11910 CR 492 • Tyler, Texas 75706 • (800) 527-8478
Anniston: 1501 W 17th St. • Anniston, AL 36201 • (800) 226-7601
Corona: 1001 El Camino Ave. • Corona, CA 92879 • (866) 527-8471
Elmira: 1021 East Water • Elmira, NY 14902
New Lenox: 2200 West Haven• New Lenox, IL 60451
Portland: 6204 N. Marine Dr. • Portland, OR 97203

www.tylerunion.com

This document is void if modified in any manner other than the addition of project name, material, contractor, or project number

TYLER UNION®
Quality Waterworks Products
www.tylerunion.com

26U - Push On Tyton Joint
Union-Tite Ductile Iron
Compact Fittings
Revised 4/2013

DOMESTIC PRODUCT SUBMITTAL

Current Revisions Apply for all Listed Standards

SIZES:..... 4" through 24"

STANDARDS:..... ANSI/AWWA C153/A21.53, NFPA 13/24, 4" - 12" UL listed and approved (File - Tyler Union)
Cast of ASTM A536 qualified ductile iron. Date code is cast on and required for traceability.

PRESSURE RATING:... *Flanged fittings rated at 250 psi. Push on joints 4" – 24" rated at 350 psi.
*Note: With the use of rubber annular ring flange gasket, 4" – 24" fittings can be rated at 350 psi.
Note: Wyes over 12" are not pressure rated. Contact Tyler Union for rating in your application.

DEFLECTION:..... Max joint deflection 4"– 12", 5° and 14"– 24", 3°. Reduces by 50% at nominal pipe & fitting diameters

NSF-61 & NSF-372:..... Meets all requirements including Annex G, Tyler Union's Underwriters Laboratory listing MH16439.

ASPHALTIC COATING: Per ANSI/AWWA C104/A21.4 and ANSI/AWWA C153/A21.53.

CEMENT LINING:..... Per ANSI/AWWA C104/A21.4, with double cement lining available upon request.

EPOXY COATING:..... Fusion bonded epoxy per ANSI/AWWA C116/A21.16. Additional coatings available upon request.

BARE:..... Available upon request.

FASTENERS:..... Per ANSI/AWWA C111/A21.11 and/or ASTM A242 high strength low alloy weathering steel

RESTRAINING LUGS:.. *Lugs provided on 16" and smaller fittings. Lug pattern accommodates most gripper type restraints.
*Note: With sufficient lead time to adapt tooling, restraining lugs are available on 18'-24" fittings.

INSTALLATION:..... Per AWWA C600 and C651 using pipe conforming to ANSI/AWWA C151/A21.51 or AWWA C900/905. Designed for use with TYTON® and McWane Sure Stop® gaskets. Contact Tyler Union regarding the installation or use of other gasket types and/or gasket manufacturers.

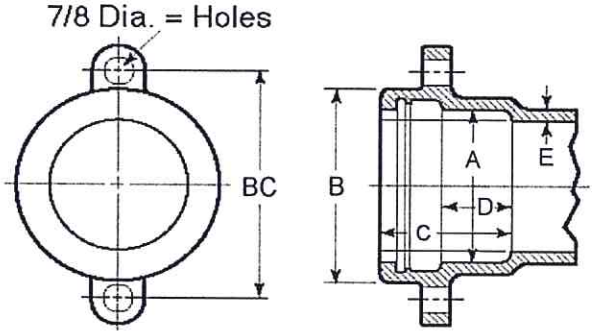

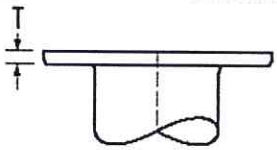

ANSI/AWWA C153/A21.53 – Compact Flange
Nominal Thickness Dimensions in Inches (T = +/- .060")

Size	T	Size	T	Size	T
3	.60	10	.75	18	.93
4	.63	12	.81	20	.96
6	.63	14	.87	24	1.00
8	.70	16	.90	36	1.10

TYLER UNION

NOMINAL JOINT DIMENSIONS IN INCHES

Size Inches	Pipe Diameter	A Dia.	B Dia.	B.C. Dia.	C Dim.	D Dim.	E Dim.	Bolt Dia.
4	4.80	5.04	6.38	7.88	4.16	2.25	0.35	7/8
6	6.90	7.14	8.52	10.50	4.29	2.25	0.37	7/8
8	9.05	9.32	10.90	12.88	4.78	2.25	0.39	7/8
10	11.10	11.37	12.91	14.69	4.98	2.25	0.41	7/8
12	13.20	13.47	15.12	17.19	4.98	2.25	0.43	7/8
14	15.30	15.64	18.12	19.00	5.40	2.25	0.51	7/8
16	17.40	17.74	20.32	21.40	5.40	2.25	0.52	7/8
18	19.50	19.83	22.52	....	5.40	2.25	0.59	7/8
20	21.60	21.94	24.29	....	5.40	2.25	0.60	7/8
24	25.80	26.14	29.14	....	5.65	2.50	0.62	7/8

Tyler Union Waterworks Contact Information
Tyler: 11910 CR 492 • Tyler, Texas 75706 • (800) 527-8478
Anniston: 1501 W 17th St. • Anniston, AL 36201 • (800) 226-7601
Corona: 1001 El Camino Ave. • Corona, CA 92879 • (866) 527-8471

TYLER UNION®

UNION-TITE DUCTILE IRON C153 COMPACT FITTINGS

Sizes 4"-12" UL Listed for Fire Main Equipment

SAMPLE SPECIFICATIONS (Current ANSI/AWWA revisions apply)

4" through 24" Push-On joint ductile iron fittings shall be produced in accordance with all applicable terms and provisions of ANSI/AWWA C153/A21.53. Fittings are cement-lined and seal-coated in accordance with ANSI/AWWA C104/A21.4. Joints shall be in accordance with manufacturer's design with bell sockets designed to receive pressure pipe O.D.'s as specified in ANSI/AWWA C151/A21.51 and AWWA C900 TABLE 2. The working pressure rating shall be 350 PSI, except for wyes and flanged-branch fittings. NOTE: Fittings are cement lined and seal coated in accordance with ANSI/AWWA C104/A21.4, also available bare or epoxy coated. Double cement lined available. Coated and/or lined fittings meet NSF-61, NSF-372 and Annex G.

Thicknesses and dimensions of bell sockets and gaskets shall be in accordance with the manufacturer's design. Gaskets shall be furnished by the manufacturer. Working pressures apply to fittings only and do not apply to restraining lugs or external restraining devices. Installation of fittings shall be per AWWA C600 and AWWA C651.

NOTE: Standard restraining lugs are provided on sizes 4" through 16" ONLY. Restraining lugs are available on 18"-24" fittings provided sufficient time is available to make tooling adaptations.

EXCEPTIONS: Union-Tite fittings with flanged branches are rated for water pressure of 250 PSI but can be rated for 350 PSI with the use of an annular ring or comparable gasket. Wye fittings over 12" are not pressure rated, call Tyler Union for information.

ADVANTAGES AND FEATURES

- Push-on gasket joint uses TYTON® or McWane 350 Sure Stop® gaskets
- For use with Ductile iron pipe, C-900/905 PVC pipe, and 4"-12" pressure rated IPS diameter PVC pipe (with transition gasket)
- Deep stab joint design accommodates taper on plastic pipes
- Slip joint installation eliminates T-bolts and nuts (MJ glands not needed)

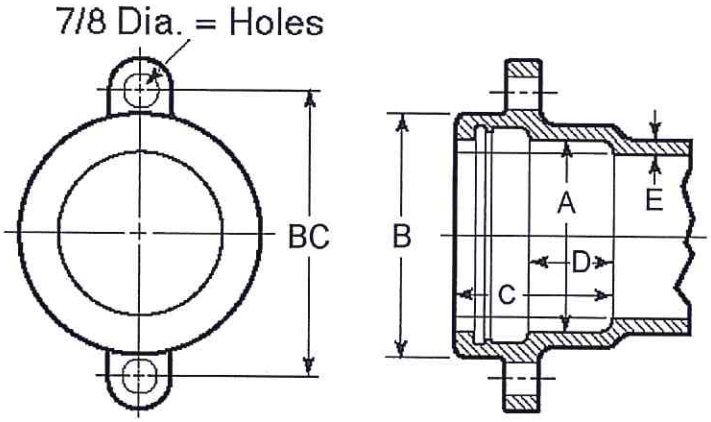

BELL DIMENSIONS IN INCHES FOR UNION-TITE FITTINGS

Pipe Size	A	B	B.C.	C	D	E
4	5.04	6.38	7.88	4.16	2.25	.35
6	7.14	8.52	10.50	4.29	2.25	.37
8	9.32	10.90	12.88	4.78	2.25	.39
10	11.37	12.91	14.69	4.98	2.25	.41
12	13.47	15.12	17.19	4.98	2.25	.43
14	15.64	18.12	19.00	5.40	2.25	.51
16	17.74	20.32	21.40	5.40	2.25	.52
18	19.83	22.52	...	5.40	2.25	.59
20	21.94	24.29	...	5.40	2.25	.60
24	26.14	29.14	...	5.65	2.50	.62

TYTON® is a registered trademark of U.S. Pipe and Foundry Company.

For Joint deflection, refer to Tyler Union product submittal 26U located on page 65 of this catalog.

NOTE: The fitting laying lengths provided are approximate, contact Tyler Union Waterworks for the laying length of a specific fitting.

TYLER UNION

UNION-TITE DUCTILE IRON C153 COMPACT FITTINGS

Sizes 4"-12" UL Listed for Fire Main Equipment

BENDS

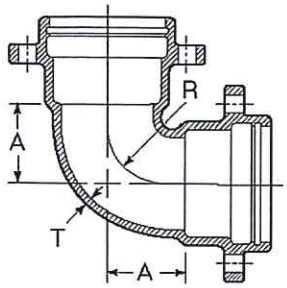

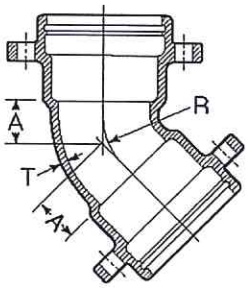

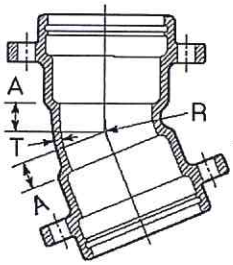

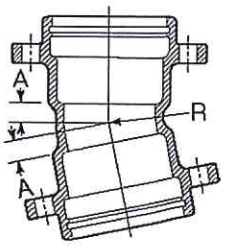

Size	90° (1/4) UT Bends T	Dimensions A	R	Weight	45° (1/8) UT Bends Dimensions A	R	Weight	22½° (1/16) UT Bends Dimensions A	R	Weight	11¼° (1/32) UT Bends Dimensions A	R	Weight
4	.35	4.5	3.87	24	2.0	3.31	26	1.50	4.38	18	1.25	6.77	18
6	.37	6.0	5.37	51	3.0	5.72	42	2.25	8.16	39	1.50	9.38	40
8	.39	7.0	6.37	80	3.5	6.93	66	2.50	9.40	64	1.75	11.48	60
10	.41	9.0	8.36	121	4.5	9.34	101	3.00	13.17	67	2.00	13.95	77
12	.43	10.0	9.36	151	5.5	11.75	128	3.50	14.42	111	2.25	16.50	94
14	.51	12.0	10.98	254	5.5	10.85	143	3.75	13.82	162	2.60	14.26	113
16	.52	13.0	12.00	328	6.0	12.02	225	4.00	14.97	195	2.60	15.23	172
18	.59	15.5	14.00	482	6.5	12.36	209	7.50	30.19	209	3.00	60.94	209
20	.60	17.0	15.50	340	7.0	13.59	397	8.50	35.19	414	3.50	71.07	265
24	.62	17.0	15.59	674	7.5	14.69	492	9.00	37.69	596	...	...	...

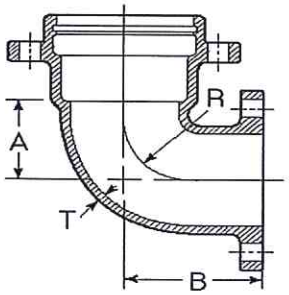

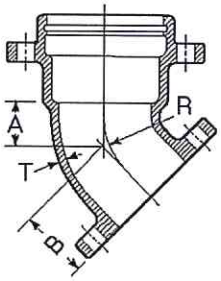

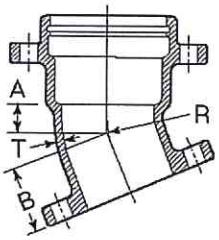

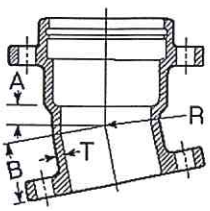

Size	90° (1/4) UT x Flange Bends T	Dimensions A	B	R	Weight	45° (1/8) UT x Flange Bends Dimensions A	B	R	Weight	22½° (1/16) UT x Flange Bends Dimensions A	B	R	Weight	11¼° (1/32) UT x Flange Bends Dimensions A	B	R	Weight
4	.35	4.5	6.5	3.87	31	2.0	4.0	3.31	21	1.50	3.5	4.38	25	1.25	3.30	6.77	24
6	.37	6.0	7.0	5.37	49	3.0	5.0	5.72	42	2.25	4.3	8.16	44	1.50	3.50	9.38	30
8	.39	7.0	9.0	6.37	74	3.5	5.5	6.93	60	2.50	4.5	9.40	64	1.75	3.75	11.48	61
10	.41	9.0	10.0	8.36	130	4.5	6.5	9.34	93	3.00	5.3	13.17	90	2.00	4.00	13.95	80
12	.43	10.0	12.0	9.36	158	5.5	7.5	11.75	122	3.50	5.5	14.42	112	2.25	4.30	16.50	94
14	.51	12.0	15.5	10.98	231	5.5	8.5	10.85	162	3.75	6.8	13.82	174	2.60	5.75	14.26	170
16	.52	13.0	16.5	12.00	233	6.0	9.5	12.02	275	4.00	7.5	14.97	228	2.60	6.10	15.23	228

NOTE: The fitting laying lengths provided are approximate, contact Tyler Union Waterworks for the laying length of a specific fitting.

TYLER UNION

UNION-TITE DUCTILE IRON C153 COMPACT FITTINGS

TEES

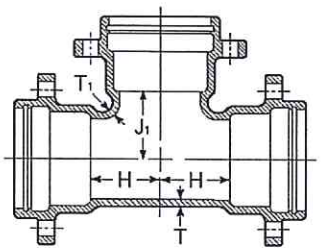

UT x UT Tees

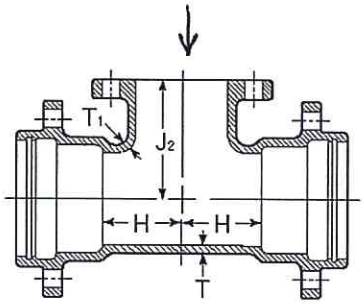

UT x Flange Tees

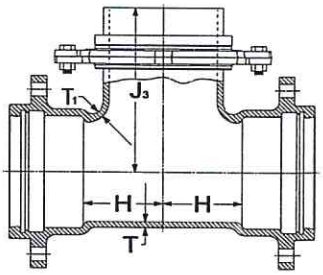

UT x Swivel Tees

Size	Dimensions T	T1	H	J1	J2	J3	Weights UT x UT	UT xFlange	UT x Swivel
4	.35	.35	4.5	4.5	6.5	...	44	45	...
ix4	.37	.35	5.0	6.0	8.0	...	68	56	...
6	.37	.37	6.0	6.0	8.0	9.5	69	71	65
8x4	.39	.35	5.0	7.0	9.0	...	73	89	...
8x6	.39	.37	6.0	7.0	9.0	10.5	96	101	100
8	.39	.39	7.0	7.0	9.0	10.5	116	117	110
10x4	.41	.35	6.0	9.0	11.0	...	102	115	...
10x6	.41	.37	7.0	9.0	11.0	12.5	113	128	130
10x8	.41	.39	8.0	9.0	11.0	12.5	145	145	156
10	.41	.41	9.0	9.0	11.0	...	155	158	...
12x4	.43	.35	6.0	10.0	12.0	...	119	138	...
12x6	.43	.37	7.0	10.0	12.0	13.5	141	148	162
12x8	.43	.39	8.0	10.0	12.0	13.5	177	170	158
12x10	.43	.41	9.0	10.0	12.0	...	160	162	...
12	.43	.43	10.0	10.0	12.0	...	217	183	...
14x6	.51	.44	6.5	10.5	12.5	14.0	176	212	202
14x10	.51	.46	8.5	10.5	12.5	...	195	246	...
14x12	.51	.47	9.5	10.5	12.5	...	196	296	...
14	.51	.51	10.5	10.5	14.0	...	209	321	...
16x6	.52	.45	6.5	11.5	13.5	15.0	266	160	229
16x8	.52	.46	7.5	11.5	13.5	15.0	292	270	292
16x10	.52	.47	8.5	11.5	13.5	...	232	330	...
16x12	.52	.48	9.5	11.5	13.5	...	239	321	...
16x14	.52	.51	10.5	11.5	15.0	...	349	342	...
16	.52	.52	11.5	11.5	15.0	...	261	355	...
18x6	.59	.44	6.5	12.5	14.5	16.13	348	301	348
18x8	.59	.45	7.5	12.5	14.5	16.13	325	319	324
18x10	.59	.47	8.5	12.5	14.5	...	344	337	...
18x14	.59	.56	10.5	12.5	16.0	...	342	393	...
18x16	.59	.57	11.5	12.5	16.0	...	362	420	...
20x6	.60	.44	7.0	14.0	16.0	17.5	355	341	400
20x10	.60	.47	9.0	14.0	16.0	...	369	420	...
20x14	.60	.56	11.0	14.0	17.5	...	484	474	...
20x16	.60	.57	12.0	14.0	17.5	...	610	498	...
20x18	.60	.59	13.0	14.0	17.5	...	539	...	...
24x6	.62	.44	7.0	16.0	18.0	19.5	385	512	525
24x10	.62	.47	9.0	16.0	18.0	...	478	468	...
24x12	.62	.49	10.0	16.0	18.0	...	663	503	...
24x14	.62	.56	11.0	16.0	19.5	...	542	531	...
24x16	.62	.57	12.0	16.0	19.5	...	566	555	...
24x18	.62	.59	13.0	16.0	...	...	593	...	
24x20	.62	.60	15.0	17.0	...	...	628	...	...
24	.62	.62	17.0	17.0	...	...	884	...	...

NOTE: The fitting laying lengths provided are approximate, contact Tyler Union Waterworks for the laying length of a specific fitting.

REDUCERS

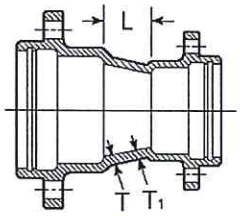

UT x UT Reducers

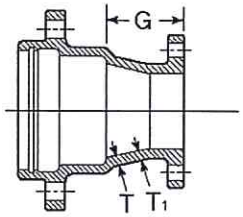

UT x Flange Reducers

Size	Dimensions T	T1	L	G	Weights UT x UT	UT xFlange
6x4	.37	.35	4.0	6.0	32	32
8x4	.39	.35	5.0	7.0	46	46
8x6	.39	.37	4.0	6.0	49	47
10x4	.41	.35	7.0	9.0	47	55
10x6	.41	.37	5.0	7.0	47	59
10x8	.41	.39	4.0	6.0	53	61
12x4	.43	.35	9.0	11.0	74	78
12x6	.43	.37	7.0	9.0	58	75
12x8	.43	.39	5.0	7.0	74	74
12x10	.43	.41	4.0	6.0	82	95
14x6	.51	.44	9.0	11.0	84	121
14x8	.51	.45	7.0	9.0	85	128
14x10	.51	.46	5.0	7.0	87	127
14x12	.51	.47	4.0	6.0	104	144
16x6	.52	.45	11.0	13.0	94	133
16x8	.52	.46	9.0	11.0	104	141
16x10	.52	.47	7.0	9.0	130	158
16x12	.52	.48	5.0	7.0	152	172
16x14	.52	.51	4.0	6.0	139	196
18x8	.59	.45	14.0	16.0	142	157
18x10	.59	.47	12.0	14.0	151	175
18x12	.59	.49	10.0	12.0	167	215
18x14	.59	.56	8.0	11.5	217	234
18x16	.59	.57	7.0	10.5	202	246
20x10	.60	.47	14.0	16.0	180	234
20x12	.60	.49	12.0	...	205	...
20x14	.60	.56	10.0	13.5	233	249
20x16	.60	.57	8.0	11.5	250	272
20x18	.60	.59	7.0	...	248	...
24x12	.62	.49	16.0	18.0	246	262
24x14	.62	.56	14.0	17.5	281	315
24x16	.62	.57	12.0	15.5	380	328
24x18	.62	.59	10.0	...	390	...
24x20	.62	.60	8.0	...	421	...

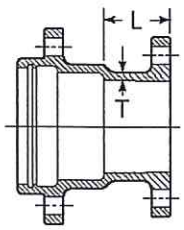

UT x Flange Adaptor

Size	Dimensions T	L	Weight
4	.35	6.0	28
6	.37	6.0	36
8	.39	6.0	54
10	.41	6.0	71
12	.43	6.0	102
14	.51	7.0	113
16	.52	7.0	115
20	.60	6.0	295

TAPPED TEE/CROSS

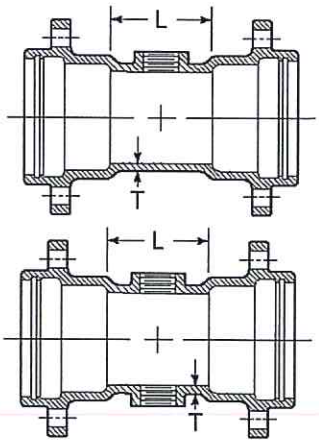

UT x Tapped Tee/Crosses

Size	Dimensions T	Max Tap	L	Weight
4	.35	3.0	6.0	27
6	.37	3.5	6.0	38
8	.39	3.5	6.0	59
10	.41	3.5	6.0	72
12	.43	3.5	6.0	92

CAPS AND PLUGS

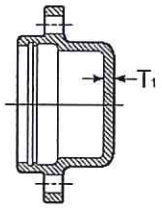

Solid Cap

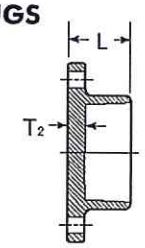

Solid Plug

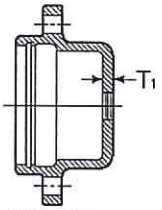

2" Tapt Cap

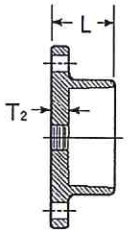

2" Tapt Plug

UT Caps and Plugs*

Size	Dimensions T1	T2	L	Weights Cap	Plug
4	.48	.50	5.25	15	8
6	.48	.50	5.25	20	23
8	.51	.53	5.25	35	32
10	.53	.56	5.25	50	38
12	.55	.62	5.25	75	49

*Restraining lugs (ears) available.

NOTE: The fitting laying lengths provided are approximate, contact Tyler Union Waterworks for the laying length of a specific fitting.

TYLER UNION®
Quality Waterworks Products
www.tylerunion.com

28U - Flange Joint
ANSI/AWWA C110/A21.10
Full Body Ductile Iron Fittings
Revised 4/2013

DOMESTIC PRODUCT SUBMITTAL

Current Revisions Apply for all Listed Standards

SIZES:..... 2" through *64" (*Contact Tyler Union for 54"-64" Flange fitting information)

STANDARDS:..... ANSI/AWWA C110/A21.10, NFPA 13/24, 3" - 12" UL listed and approved (File - Tyler Union)
Cast of ASTM A536 qualified ductile iron. Date code is cast on and required for traceability

PRESSURE RATING:... *2" through 48" flanged fittings rated at 250 psi.
*Note: With the use of rubber annular ring flange gasket, 2" – 24" fittings can be rated at 350 psi

DEFLECTION:..... Deflection is "not" recommended for flange joint fittings due to the rigidity of the joint upon completion of installation.

NSF-61 & NSF-372:..... Meets all requirements including Annex G, Tyler Union's Underwriters Laboratory listing MH16439

COATING: ..... Asphaltic or Primer per ANSI/AWWA C104/A21.4, Standard primer is Tnemec Pota Pox 140N-1211
Contact Tyler Union for additional coating options

CEMENT LINING:..... Per ANSI/AWWA C104/A21.4, with double cement lining available upon request.

EPOXY COATING:..... Fusion bonded epoxy per ANSI/AWWA C116/A21.16. Additional coatings available upon request.

BARE:..... Available upon request

FLANGES:..... ANSI Class 125 per ASME B16.1 and ANSI/AWWA C111/A21.11
Note: *ANSI Class 250 ASME B16.1 flanged fittings available upon request
Note: *Due to larger bolt sizing and bolt circle, Class 250 flanges are "not" compatible with Class 125 flanged fittings. AWWA C110 and AWWA C115 Class 125 flanges are compatible.

FLANGE THICKNESS:. ANSI/AWWA C115/A21.15 standard class 125 template for drilling bolt holes
Note: Drilling templates are in multiples of 4, so that fittings may be made face to in any quarter. Bolt holes shall straddle the center line.

FASTENERS:..... Per ANSI/AWWA C111/A21.11 and/or ASTM A242 high strength low alloy weathering steel

INSTALLATION:..... Per AWWA C600 and C651 using pipe conforming to ANSI/AWWA C151/A21.51

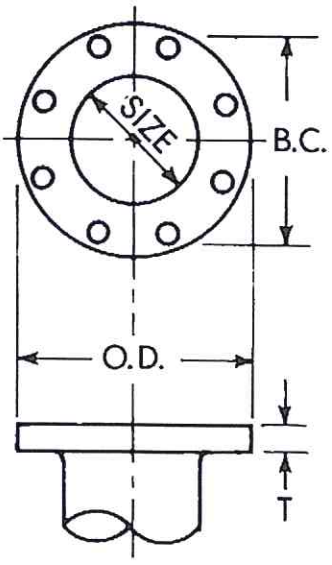

TYLER UNION

FLANGE DETAILS IN INCHES						BOLTS	
Size Inches	Diameter DI Pipe	Flange O.D.	Bolt Circle Diameter	Flange Thickness "T"	Bolt Hole Diameter	Size	Qty.
2	2.51	6.00	4.75	0.62	0.750	5/8 x 2.25	4
3	3.96	7.50	6.00	0.75	0.750	5/8 x 2.25	4
4	4.80	9.00	7.50	0.94	0.750	5/8 x 3.00	8
6	6.90	11.00	9.50	1.00	0.875	3/4 x 3.50	8
8	9.05	13.50	11.75	1.12	0.875	3/4 x 3.50	8
10	11.10	16.00	14.25	1.19	1.000	7/8 x 4.00	12
12	13.20	19.00	17.00	1.25	1.000	7/8 x 4.00	12
14	15.30	21.00	18.75	1.38	1.125	1 x 4.50	12
16	17.40	23.50	21.25	1.44	1.125	1 x 4.50	16
18	19.50	25.00	22.75	1.56	1.250	1-1/8 x 5.00	16
20	21.60	27.50	25.00	1.69	1.250	1-1/8 x 5.00	20
24	25.80	32.00	29.50	1.88	1.375	1-1/4 x 5.50	20
30	32.00	38.75	36.00	2.12	1.375	1-1/4 x 5.50	28
36	38.30	46.00	42.75	2.38	1.625	1-1/2 x 7.00	32
42	44.50	53.00	49.50	2.62	1.625	1-1/2 x 7.50	36
48	50.80	59.50	56.00	2.75	1.625	1-1/2 x 8.00	44

Tyler Union Waterworks Contact Information
Tyler: 11910 CR 492 • Tyler, Texas 75706 • (800) 527-8478
Anniston: 1501 W 17th St. • Anniston, AL 36201 • (800) 226-7601
Corona: 1001 El Camino Ave. • Corona, CA 92879 • (866) 527-8471

TYLER UNION

DUCTILE IRON C110 FLANGED FITTINGS

Sizes 3" thru 12" UL Listed for Fire Main Equipment

SAMPLE SPECIFICATION (Current ANSI/AWWA revisions apply)

Flanged fittings, 2" through 48" shall be manufactured of ductile Iron in accordance with all applicable terms and provisions of standards ANSI/AWWA C110/A21.10. Flange surfaces shall be faced and drilled in accordance with ANSI Class 125, B16.1. All ductile iron flanged fittings shall be rated for water pressure of 250 PSI. Flanged ductile-iron fittings in 24-in. (610 mm) and smaller sizes may be rated for 350 psi (2,413 kPa) with the use of special gaskets. NOTE: Fittings are cement lined and seal coated in accordance with ANSI/AWWA C104/A21.4. Fittings are also available prime coated, bare or epoxy coated. All coated fittings meet requirements of NSF-61, NSF-372, and Annex G. Interiors of fittings shall be lined and seal coated in accordance with ANSI/AWWA C104/A21.4. Cement mortor lining for ductile iron pipe and fittings for potable water unless otherwise specified. Installation of fittings shall be per AWWA C110.

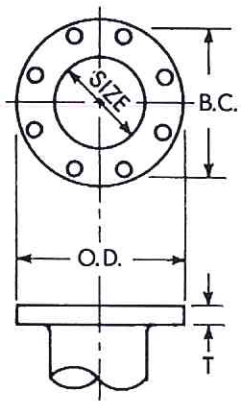

NOTE: No flange joint material furnished.

FLANGE DETAILS

Nominal Pipe Size Inch	Flange O.D.	Dia. of Bolt Circle	Flange Thickness T	Bolt Hole Diameter	Number of Bolts	Bolt Dia. and Lengths
2	6	4.75	.62	.75	4	⅝ x 2¼
3	7.5	6	.75	.75	4	⅝ x 2½
4	9	7.5	.94	.75	8	⅝ x 3
6	11	9.5	1.00	.875	8	¾ x 3½
8	13.5	11.75	1.12	.875	8	¾ x 3½
10	16	14.25	1.19	1.00	12	⅞ x 4
12	19	17	1.25	1.00	12	⅞ x 4
14	21	18.75	1.38	1.125	12	1 x 4½
16	23.5	21.25	1.44	1.125	16	1 x 4½
18	25	22.75	1.56	1.25	16	1⅛ x 5
20	27.5	25	1.69	1.25	20	1⅛ x 5
24	32	29.5	1.88	1.375	20	1¼ x 5½
30	38.75	36	2.12	1.375	28	1¼ x 6½
36	46	42.75	2.38	1.675	32	1½x7
42	53	49.50	2.62	1.625	36	1½x7½
48	59.50	56.00	2.75	1.625	44	1½x8

NOTE: Drilling templates are in multiples of four, so that fittings may be made to face in any quarter. Bolt holes shall straddle the center line.

TYLER UNION

DUCTILE IRON C110 FLANGED FITTINGS

Sizes 3" thru 12" UL Listed for Fire Main Equipment

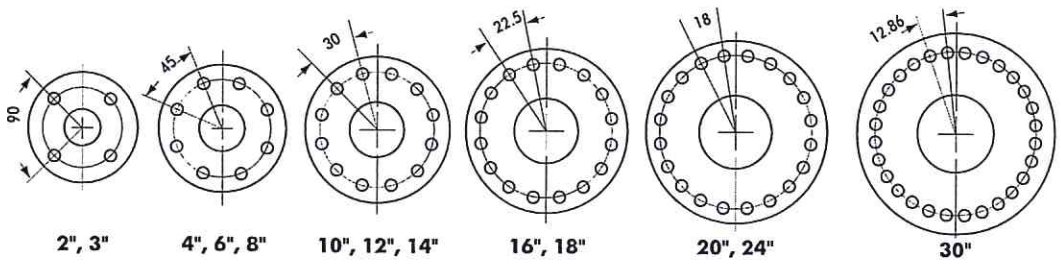

2", 3" | 4", 6", 8" | 10", 12", 14" | 16", 18" | 20", 24" | 30"

BENDS

Note: Base Bends are on page 33 and 34, reducing and long radius 90° bends are on page 33.

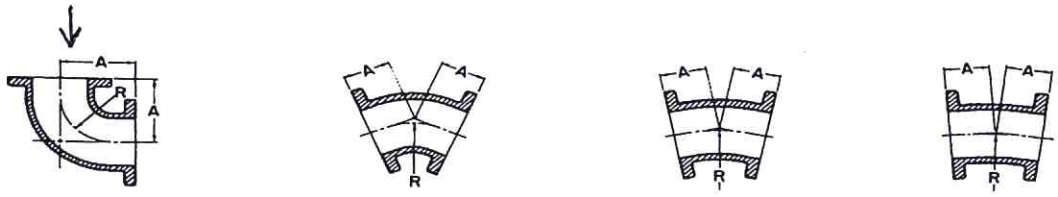

	90° Bends (1/4)			45° Bends (1/8)			22½° Bends (1/16)			11¼° Bends (1/32)		
	Dimensions			Dimensions			Dimensions			Dimensions		
Size	R	A	Weight	R	A	Weight	R	A	Weight	R	A	Weight
2	3.0	4.5	14	...	...	...	...	...	...	...	...	...
3	4	5.5	26	3.62	3	20	7.56	3	22	15.25	3	20
→ 4	4.5	6.5	44	4.81	4	36	10.06	4	35	20.31	4	40
6	6	8	67	7.25	5	57	15.06	5	64	30.5	5	56
8	7	9	115	8.44	5.5	105	17.62	5.5	90	35.5	5.5	90
10	9	11	164	10.88	6.5	131	22.62	6.5	130	45.69	6.5	130
12	10	12	236	13.25	7.5	196	27.67	7.5	194	55.81	7.5	193
14	11.5	14	330	12.06	7.5	245	25.12	7.5	250	50.75	7.5	245
16	12.5	15	478	13.25	8	315	27.62	8	315	55.81	8	315
18	14	16.5	527	14.5	8.5	422	30.19	8.5	402	60.94	8.5	385
20	15.5	18	878	16.88	9.5	485	35.19	9.5	505	71.06	9.5	505
24	18.5	22	1085	18.12	11	730	37.69	11	528	76.12	11	760
30	21.5	25	1755	27.75	15	1355	57.81	15	1385	116.75	15	1395
36	24.5	28	2135	35.00	18	1755	72.88	18	1790	147.25	18	1805
42	27.5	31	3055	42.25	21	2600	88.00	21	2665	177.69	21	2680
48	30.5	34	4095	49.50	24	3580	103.06	24	3665	208.12	24	3695

256772_utility catalog.pdf 31

12/15/08 8:24:26 AM

TYLER UNION

TEES, REDUCING TEES, CROSSES

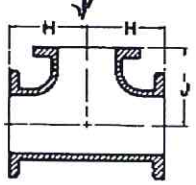

Straight Tees, Reducing on Branch Tees

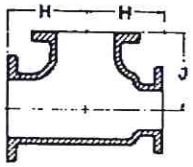

*Reducing on Run

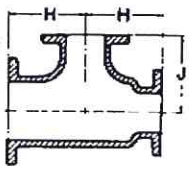

*Reducing on Run and Branch

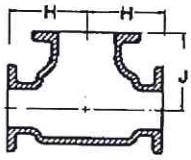

*Bullhead Tees

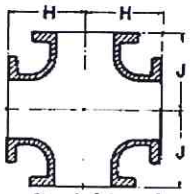

Straight and Reducing Crosses

Size			Dimensions		Weights	
Run	Run	Branch	H	J	Tee	Cross
2	2	2	4.5	4.5	20	
3	3	2	5.5	5.5	35	...
3	3	3	5.5	5.5	42	51
4	3	3	6.5	5.5	53	...
*4	4	2	6.5	6.5	55	...
4	4	3	6.5	6.5	54	76
4	4	4	6.5	6.5	60	87
*4	4	6	8.0	8.0	88	...
*6	4	4	8.0	8.0	96	...
*6	4	6	8.0	8.0	100	...
*6	6	2	8.0	8.0	85	...
6	6	3	8.0	8.0	85	96
6	6	4	8.0	8.0	90	112
6	6	6	8.0	8.0	98	141
6	6	8	9.0	9.0	138	...
*8	6	4	9.0	9.0	130	...
*8	6	6	9.0	9.0	148	...
*8	6	8	9.0	9.0	154	...
8	8	3	9.0	9.0	128	140
8	8	4	9.0	9.0	155	155
8	8	6	9.0	9.0	148	172
8	8	8	9.0	9.0	179	195
*8	8	10	11.0	11.0	225	...
*8	8	12	12.0	12.0	277	...
*†10	6	6	13.0	13.0	278	...
*†10	6	10	13.0	13.0	308	...
*†10	8	6	13.0	13.0	298	...
*†10	8	8	13.0	13.0	278	...
*†10	8	10	13.0	13.0	325	...
10	10	4	11.0	11.0	239	220
10	10	6	11.0	11.0	215	242
10	10	8	11.0	11.0	254	294
10	10	10	11.0	11.0	265	330
10	10	12	12.0	12.0	337	...
*†12	6	6	14.0	14.0	346	...
*†12	6	8	14.0	14.0	362	...
*†12	8	6	14.0	14.0	355	...

Size			Dimensions		Weights	
Run	Run	Branch	H	J	Tee	Cross
*12	8	8	12.0	12.0	375	...
*12	8	12	12.0	12.0	420	...
*†12	10	6	14.0	14.0	390	...
12	10	8	12.0	12.0	400	...
12	10	10	12.0	12.0	420	...
12	10	12	12.0	12.0	440	...
12	12	4	12.0	12.0	322	310
12	12	6	12.0	12.0	297	326
12	12	8	12.0	12.0	346	351
12	12	10	12.0	12.0	394	415
12	12	12	12.0	12.0	369	438
*14	14	4	14.0	14.0	410	...
14	14	6	14.0	14.0	420	450
14	14	8	14.0	14.0	435	475
14	14	10	14.0	14.0	450	...
14	14	12	14.0	14.0	470	555
14	14	14	14.0	14.0	500	595
*16	16	4	15.0	15.0	525	...
16	16	6	15.0	15.0	573	565
16	16	8	15.0	15.0	555	590
16	16	10	15.0	15.0	565	620
16	16	12	15.0	15.0	590	665
16	16	14	15.0	15.0	610	...
16	16	16	15.0	15.0	635	755
18	18	6	13.0	15.5	780	...
18	18	8	13.0	15.5	609	...
18	18	10	13.0	15.5	585	...
18	18	12	13.0	15.5	638	706
18	18	14	16.5	16.5	808	...
18	18	16	16.5	16.5	760	...
18	18	18	16.5	16.5	865	915

* Not included in AWWA C110
† H and J dimensions are two-inches longer than straight tees.

***NOTE: "H" & "J" dimensions are approximate, contact Tyler Union for laying length of a specific fitting**

256772_utility catalog.pdf 32
12/15/08 8:24:27 AM

REDUCERS

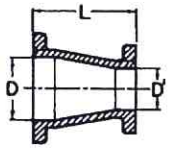

Concentric Reducer

Size D	Size D1	Dimensions L	Wts
3	2	6	17
4	2	7	23
4	3	7	29
6	2	9	30
6	3	9	44
6	4	9	46
6	5	9	56
8	3	11	61
8	4	11	63
8	5	11	70
8	6	11	75
10	4	12	98
10	6	12	107
10	8	12	116
12	4	14	119
12	6	14	130
12	8	14	152
12	10	14	178
14	6	16	165
14	8	16	185
14	10	16	205
14	12	16	235
16	6	18	210
16	8	18	230
16	10	18	255
16	12	18	285
16	14	18	315
18	8	19	265
18	10	19	290
18	12	19	320
18	14	19	350
18	16	19	405
20	10	20	418
20	12	20	465
20	14	20	430
20	16	20	445
20	18	20	470
24	12	24	608
24	14	24	565
24	16	24	610
24	18	24	645
24	20	24	695
30	16	30	945
30	18	30	970
30	20	30	1144
30	24	30	1155
42	24	42	1810
42	30	42	2060
42	36	42	2345
48	30	48	2615
48	36	48	2940
48	42	48	3320

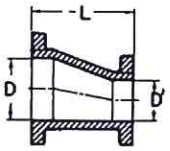

***Eccentric Reducer**

Size D	Size D1	Dimensions L	Wts
4	3	7	30
6	3	9	45
6	4	9	52
8	4	11	70
8	6	11	80
10	4	12	95
10	6	12	98
10	8	12	123
12	4	14	120
12	6	14	135
12	8	14	149
12	10	14	177
14	6	16	165
14	8	16	185
14	10	16	205
14	12	16	294
16	6	18	210
16	8	18	230
16	10	18	255
16	12	18	285
16	14	18	315
18	8	19	265
18	10	19	290
18	12	19	306
18	14	19	350
18	16	19	385
20	10	20	350
20	12	20	370
20	14	20	402
20	16	20	449
20	18	20	455
24	12	24	535
24	14	24	570
24	16	24	614
24	18	24	645
24	20	24	695
30	16	30	778
30	18	30	810
30	20	30	870
30	24	30	970
36	24	36	1425
36	30	36	2120
42	24	42	2340
42	30	42	2060
42	36	42	2345
48	30	48	2625
48	36	48	2950
48	42	48	3320

NOTE: Eccentric Reducers not included in AWWA C110

NOTE: Eccentric Reducers Offset
1/2 D minus 1/2 D1=Offset
Example:
6x3 Ecc.Reducer
3-1½ = 1½" Offset

NOTE: "L" dimensions for C110 Eccentric reducers are approximate, contact Tyler Union for the laying length of a specific fitting

TYLER UNION

* REDUCING BASE BENDS

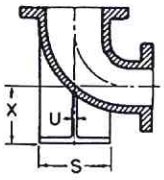

Base Under Large End

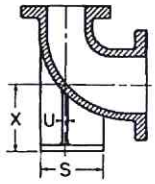

Base Under Small End

Size	Dimensions X	S	U	Weight
4x3	5.5	6	.50	45
6x4	7	7	.62	75
8x4	8.38	9	.88	118
8x6	8.38	9	.88	135
10x6	9.75	9	.88	175
10x8	9.75	9	.88	184
12x6	11.25	11	1.00	230
12x8	11.25	11	1.00	255
12x10	11.25	11	1.00	285

* Not included in AWWA C110
NOTE: "X" dimensions are identical on Base-under-large-end and Base-under-small-end. "S" dimensions are determined by the largest fitting opening.

* FLANGE SLUDGE SHOE

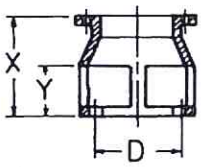

Flange Sludge Shoe

Size	Dimensions D	X	Y	Weight
3	5.75	12	6	28
4	7.00	12	6	35
6	7.87	12	6	45
8	10.12	12	6	69
10	12.25	12	6	88
12	15.25	12	6	120

* Not included in AWWA C110

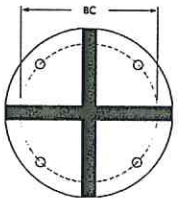

Base Drilling Details

Nom. Diameter Inches	Dimensions - Inches BC	Bolt Hole Diameter	Number of Bolts
3	3.88	5/8	4
4	4.75	3/4	4
6	5.50	3/4	4
8	7.50	3/4	4
10	7.50	3/4	4
12	9.50	7/8	4
14	9.50	7/8	4
16	9.50	7/8	4
18	11.75	7/8	4
20	11.75	7/8	4
24	11.75	7/8	4
30	14.25	1	4
36	17.00	1	4
42	21.25	1-1/8	4
48	22.75	1-1/4	4

FLANGES (COMPANION FLG)

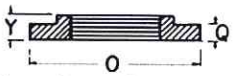

Flange for Steel Pipe
Reducing Flange for Steel Pipe

Flange for DI Pipe
Reducing Flange for DI Pipe

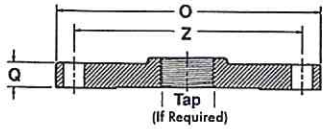

Under 12" Blind Flange
With Optional 2" Taps

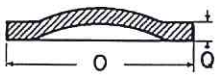

12" and Larger Blind Flange
With Optional 2" Taps

Size	Dimensions O	Q	Y	Z	Weight Steel	DI	Blind	Blind Tap
2	6	.62	1	4.75	4	...	...	...
2½	7	.69	1.13	5.50	8	...	...	...
3	7.5	.75	1.19	6.00	7	6	8	8
4	9	.94	1.31	7.50	12	11	15	15
6	11	1.00	1.56	9.50	21	14	28	28
8	13.5	1.12	1.75	11.75	28	34	45	45
10	16	1.19	1.94	14.25	49	33	62	62
12	19	1.25	2.19	...	61	52	72	87
14	21	1.38	2.25	...	...	72	110	110
16	23.5	1.44	2.50	...	...	90	165	165
18	25	1.56	2.69	...	...	105	192	190
20	27.5	1.69	2.88	...	...	115	249	250
24	32	1.88	3.25	...	...	160	375	370
30	38.75	2.12	...	...	...	255	580	580
36	46.00	2.38	...	...	...	...	790	...
42	53.00	2.62	...	...	...	...	1175	...
48	59.50	2.75	...	...	...	...	1585	...

NOTE: All flanges conform to ANSI/AWWA C110/A21.10 Standards.

DI Reducing Flange Threaded For Steel Pipe

Size	Tap x O.D.	Weight
4x3	3x9	16
6x4	4x11	25
8x4	4x13½	44
8x6	6x13½	31
10x6	6x16	50
12x6	6x19	60
10x8	8x16	55
12x10	10x19	72

DI Reducing Flange Threaded For Cast Iron Pipe

Size	Tap x O.D.	Weight
4x3	3x9	16
6x4	4x11	25
8x4	4x13½	40
8x6	6x13½	35
10x8	8x16	50
12x8	8x19	85

*NOTE: "X" and "Y" dimensions are approximate, contact Tyler Union for these dimensions of a specific fitting

TYLER UNION®
Quality Waterworks Products
www.tylerunion.com

23U - Mechanical Joint
ANSI/AWWA C153/A21.53
Compact Ductile Iron Fittings
Revised 4/2014

DOMESTIC PRODUCT SUBMITTAL

Current Revisions Apply for all Listed Standards

SIZES:..... 2" through *64" (2" not included in ANSI/AWWA C153)(*Contact Tyler Union for 54"-64" information)

STANDARDS:..... ANSI/AWWA C153/A21.53, NFPA 13/24, 3"-12" UL and 3-10"FM listed & approved (File - Tyler Union)
Cast of ASTM A536 qualified ductile iron. Date code is cast on and required for traceability.

PRESSURE RATING:... *Flanged fittings rated at 250 psi. Mechanical joints 2" – 24" rated at 350 psi and 30" – 48" at 250 psi.
*Note: With the use of rubber annular ring flange gasket, 2" – 24" fittings can be rated at 350 psi.
Note: Wyes over 16" are not pressure rated. Contact Tyler Union for rating in your application.

DEFLECTION:..... Max joint deflection 2"– 12", 5° and 14"– 48", 3°. Reduces by 50% at nominal pipe & fitting diameters

NSF-61 & NSF-372:..... Meets all requirements including Annex G, Tyler Union's Underwriters Laboratory listing MH16439.

ASPHALTIC COATING: Per ANSI/AWWA C104/A21.4 and ANSI/AWWA C153/A21.53.

CEMENT LINING:..... Per ANSI/AWWA C104/A21.4, with double cement lining available upon request.

EPOXY COATING:..... Fusion bonded epoxy per ANSI/AWWA C116/A21.16. Additional coatings available upon request.

BARE:..... Available upon request

FASTENERS:..... Per ANSI/AWWA C111/A21.11 and/or ASTM A242 high strength low alloy weathering steel

INSTALLATION:..... Per AWWA C600 and C651 using pipe conforming to ANSI/AWWA C151/A21.51 or AWWA C900/905.

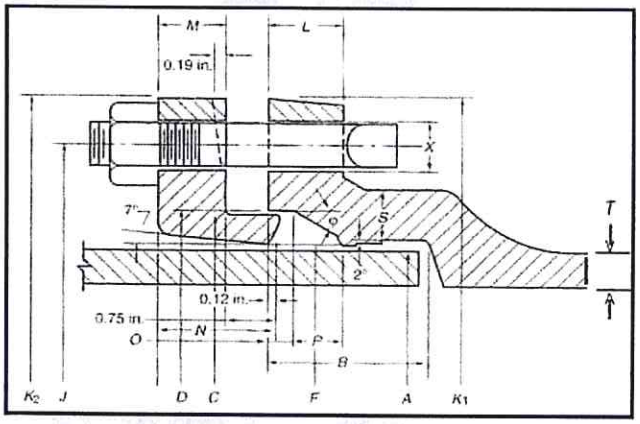

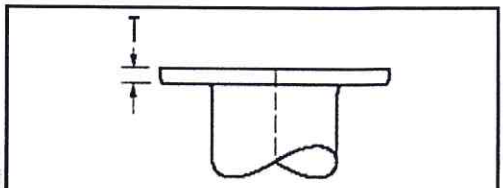

ANSI/AWWA C153/A21.53 – Compact Flange
Nominal Thickness Dimensions in Inches (T = +/- .060")

Size	T	Size	T	Size	T
3	.60	10	.75	18	.93
4	.63	12	.81	20	.96
6	.63	14	.87	24	1.00
8	.70	16	.90	36	1.10

MECHANICAL JOINT - NOMINAL JOINT DIMENSIONS IN INCHES

Size Inches	A Dia. DI Pipe	B Hub Depth	C Dia. GLAND	D Dia.	F Dia.	J Dia. GLAND	K¹ Dia.	K² Dia. GLAND	L	M GLAND	S	T	X	BOLTS Size	BOLTS Qty.
2	2.51	2.50	3.50	3.60	2.61	4.75	6.19	6.89	0.58	0.62	0.36	0.30	3/4	5/8x3.0	2
3	3.96	2.50	4.84	4.94	4.06	6.19	7.62	7.69	0.58	0.62	0.39	0.33	3/4	5/8x3.0	4
4	4.80	2.50	5.92	6.02	4.90	7.50	9.06	9.12	0.60	0.75	0.39	0.34	7/8	3/4x3.5	4
6	6.90	2.50	8.02	8.12	7.00	9.50	11.06	11.12	0.63	0.88	0.43	0.36	7/8	3/4x3.5	6
8	9.05	2.50	10.17	10.27	9.15	11.75	13.31	13.37	0.66	1.00	0.45	0.38	7/8	3/4x4.0	6
10	11.10	2.50	12.22	12.34	11.20	14.00	15.62	15.62	0.70	1.00	0.47	0.40	7/8	3/4x4.0	8
12	13.20	2.50	14.32	14.44	13.30	16.25	17.88	17.88	0.73	1.00	0.49	0.42	7/8	3/4x4.0	8
14	15.30	3.50	16.40	16.54	15.44	18.75	20.31	20.25	0.79	1.25	0.55	0.47	7/8	3/4x4.5	10
16	17.40	3.50	18.50	18.64	17.54	21.00	22.56	22.50	0.85	1.31	0.58	0.50	7/8	3/4x4.5	12
18	19.50	3.50	20.60	20.74	19.64	23.25	24.83	24.75	1.00	1.38	0.68	0.54	7/8	3/4x4.5	12
20	21.60	3.50	22.70	22.84	21.74	25.50	27.08	27.00	1.02	1.44	0.69	0.57	7/8	3/4x4.5	14
24	25.80	3.50	26.90	27.04	25.94	30.00	31.58	31.50	1.02	1.56	0.75	0.61	7/8	3/4x5.0	16
30	32.00	4.50	33.29	33.46	32.17	36.88	39.12	39.12	1.31	2.00	0.82	0.66	1-1/8	1x6.0	20
36	38.30	4.50	39.59	39.76	38.47	43.75	46.00	46.00	1.45	2.00	1.00	0.74	1-1/8	1x6.0	24
42	44.50	4.50	45.79	45.96	44.67	50.62	53.12	53.12	1.45	2.00	1.25	0.82	1-3/8	1-1/4x6.5	28
48	50.80	4.50	52.09	52.26	50.97	57.50	60.00	60.00	1.45	2.00	1.35	0.90	1-3/8	1-1/4x6.5	32

Tyler Union Waterworks Contact Information
Tyler: 11910 CR 492 • Tyler, Texas 75706 • (800) 527-8478
Anniston: 1501 W 17th St. • Anniston, AL 36201 • (800) 226-7601
Corona: 1001 El Camino Ave. • Corona, CA 92879 • (866) 527-8471

TYLER UNION

MECHANICAL JOINT C153 DUCTILE IRON COMPACT FITTINGS

Sizes 3"-12" UL & 3"-10" FM Listed
For Fire Main Equipment

SAMPLE SPECIFICATIONS (Current ANSI/AWWA revisions apply)

Mechanical joint watermain fittings with accessories, 2" through *64" shall be manufactured from ductile iron in accordance with and meet all applicable terms and provisions of standards ANSI/AWWA C153/A21.53 and ANSI/AWWA C111/A21.11. Ductile iron mechanical joint fittings 2" through 24" shall be rated for 350 PSI working pressure. Ductile iron 30" through 48" shall be rated for 250 psi working pressure. Flanged ductile iron fittings in 24" (610 mm) and smaller sizes may be rated for 350 psi (2,413 kPa) with the use of special (annular ring or comparable) gaskets. All coated and lined fittings meet requirements of NSF-61, NSF-372, and Annex G.

NOTE - EXCEPTIONS: Mechanical joint fittings with flanged branches are rated for water pressure of 250 PSI.
NOTE - Wyes over 12" are not pressure rated. Contact manufacturer for rating in your application.
NOTE - Fittings are cement lined and seal coated in accordance with ANSI/AWWA C104/A21.4. Fittings are available double cement-lined, bare, or epoxy coated upon request. Epoxy coating per ANSI/AWWA C116
NOTE - Installation per AWWA C600 and AWWA C651

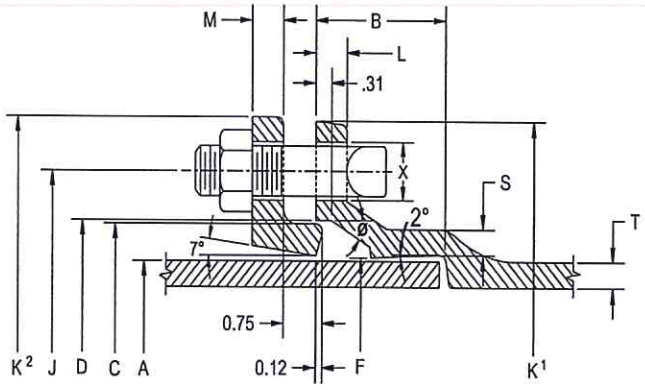

Size	A Dia.	B	C Dia.	D Dia.	F Dia.	J Dia.	K¹ Dia.	K² Dia.	L	M	S	T	X	BOLTS Size	BOLTS No.
							NOMINAL JOINT DIMENSIONS IN INCHES								
2	2.51	2.50	3.50	3.60	2.61	4.75	6.19	6.89	.58	.62	.36	.30	¾	⅝x3	2
3	3.96	2.50	4.84	4.94	4.06	6.19	7.62	7.69	.58	.62	.39	.33	¾	⅝x3	4
4	4.80	2.50	5.92	6.02	4.90	7.50	9.06	9.12	.60	.75	.39	.34	⅞	¾x3½	4
6	6.90	2.50	8.02	8.12	7.00	9.50	11.06	11.12	.63	.88	.43	.36	⅞	¾x3½	6
8	9.05	2.50	10.17	10.27	9.15	11.75	13.31	13.37	.66	1.00	.45	.38	⅞	¾x4	6
10	11.10	2.50	12.22	12.34	11.20	14.00	15.62	15.62	.70	1.00	.47	.40	⅞	¾x4	8
12	13.20	2.50	14.32	14.44	13.30	16.25	17.88	17.88	.73	1.00	.49	.42	⅞	¾x4	8
14	15.30	3.50	16.40	16.54	15.44	18.75	20.31	20.25	.79	1.25	.55	.47	⅞	¾x4½	10
16	17.40	3.50	18.50	18.64	17.54	21.00	22.56	22.50	.85	1.31	.58	.50	⅞	¾x4½	12
18	19.50	3.50	20.60	20.74	19.64	23.25	24.83	24.75	1.00	1.38	.68	.54	⅞	¾x4½	12
20	21.60	3.50	22.70	22.84	21.74	25.50	27.08	27.00	1.02	1.44	.69	.57	⅞	¾x4½	14
24	25.80	3.50	26.90	27.04	25.94	30.00	31.58	31.50	1.02	1.56	.75	.61	⅞	¾x5	16
30	32.00	4.00	33.29	33.46	32.17	36.88	39.12	39.12	1.31	2.00	.82	.66	1⅛	1x6	20
36	38.30	4.00	39.59	39.76	38.47	43.75	46.00	46.00	1.45	2.00	1.00	.74	1⅛	1x6	24
42	44.50	4.00	45.79	45.96	44.67	50.62	53.12	53.12	1.45	2.00	1.35	.82	1⅜	1¼x6½	28
48	50.80	4.00	52.09	52.26	50.97	57.50	60.00	60.00	1.45	2.00	1.35	.90	1⅜	1¼x6½	32

NOTE: 2 Inch MJ ASTM A536 ductile iron Compact fittings (2"-22.5 bend, 2"-45 bend, 2"-90 bend, 2"x12" solid sleeve, 2"x2" tee, 4"x2" tee, and 4"x2" reducer) are available beginning 2012. Call Tyler Union for availability or additional product dimensions.
*NOTE: Contact Tyler Union for 54"-64" product information.
NOTE: The fitting laying lengths provided are approximate, contact Tyler Union Waterworks for the laying length of a specific fitting.

TYLER UNION®

MECHANICAL JOINT C153 DUCTILE IRON COMPACT FITTINGS

Sizes 3"-12" UL & 3"-10" FM Listed
For Fire Main Equipment

SOLID & TAPPED PLUGS & CAPS

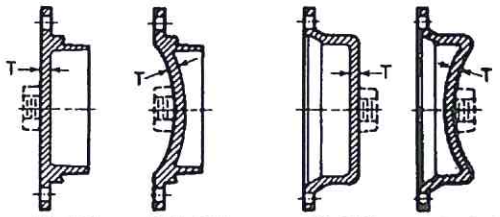

3"-12" 14"-24" 3"-12" 14"-24"

MJ Plug MJ Cap

Size	Dimensions T	Max. Tap	Weights Plugs	Caps
3	.46	2	9	8
4	.46	2	9	10
6	.46	2	18	18
8	.46	2	25	26
10	.56	2	36	32
12	.56	2	47	46
14	.62	2	76	85
16	.62	2	98	94
18	.65	2	138	121
20	.66	2	158	149
24	.68	2	223	210
30	.66	2	355	345
36	.74	2	688	626
42	.82	2	1091	723
48	.90	2	1455	974

*TAPPED TEE

MJ x FE Flange Dimensions are on inside front cover.

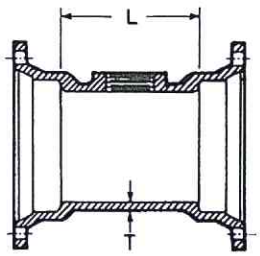

MJ Tapped Tee (2" Tap)

Size	Dimensions T	*L	Max. Tap	Weights
3	.34	6	2	19
4	.35	6	2	23
6	.37	6	2	35
8	.39	6	2	54
10	.41	6	2	68
12	.43	6	2	88
16	.52	6	2	164

Note: "L" dimensions are approximate, contact Tyler Union for laying length of a spcific fitting

SOLID SLEEVES

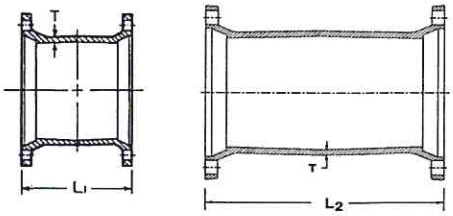

Short Long

Size	T	Dimensions L¹	L²	Weights Short	Long
3	.34	7.5	12	13	22
4	.35	7.5	12	19	25
6	.37	7.5	12	28	39
8	.39	7.5	12	38	55
10	.41	7.5	12	48	68
12	.43	7.5	12	62	81
14	.56	9.5	15	116	146
16	.57	9.5	15	138	174
18	.68	9.5	15	160	230
20	.69	9.5	15	212	269
24	.75	9.5	15	272	380
30	.66	15.0	15	500	...
30	.66	...	24	...	640
36	.74	15.0	15	725	662
36	.74	...	24	...	925
42	.82	...	24	...	1146
48	.90	...	24	...	1455

Note: 2"x12" C153 Sleeves available, call for information

ADAPTERS

***Note: Verify non-domestic laying lengths with Tyler Union**

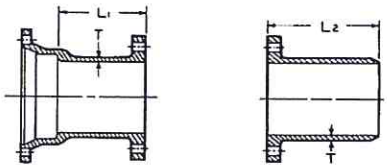

MJ x FE FE x PE

Size	T	Dimensions L¹	L²	Weights MJxFE	FExPE
3	.34	*6	12	18	...
4	.35	*6	12	26	23
6	.37	*6	12	36	35
8	.39	*6	12	50	50
10	.41	*6	12	60	69
12	.43	*6	12	88	88
14	.51	*6	12	127	...
16	.52	*6	12	155	149
18	.56	*6	...	195	...
20	.60	*6	...	275	...
24	.62	*6	...	305	...
30	.66	*7	...	470	...
36	.74	*8	...	750	...

TYLER UNION®
Quality Waterworks Products

29U-Domestic Heavy Duty Cast Iron Curb, Service, & Valve Boxes + Components

Revised 04/2013

SUBMITTAL

(Current Revisions for All Standards Apply)

SIZES: ..... Adjustable Slip and Screw type with standard assembled lengths ranging from 19" to 72" (Lengths noted do not include the addition of risers, extensions, and/or bases). See the Catalog or List Price guide for access., lids, rings, bases, risers, meter covers, etc.

STANDARDS: ..... Produced with Class 35 cast iron in accordance with and meeting all applicable terms and provisions of ASTM A-48. All Tyler Union valve boxes when properly installed are suitable for use in conjunction with projects utilizing American Association of State Highway and Transportation Officials (AASHTO) standards and provisions.

INSTALLATION: ..... Per AWWA M44, Manual of Water Supply Practices

COATING: ..... The asphaltic bituminous coating is applied to a minimum thickness of 1.5 mil and the coating once dry is neither brittle when exposed to cold or sticky when exposed to the sun.

For 4" to 12" Valves
5¼" Shaft, Screw Type

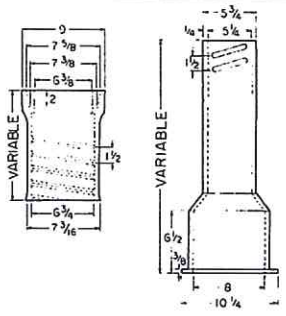

6850 SCREW TYPE VALVE BOX
Cast Iron - 2 piece

Components	Extension Height
10T + 15B	19-22
10T + 24B	27-32
16T + 24B	27-37
16T + 30B	33-43
16T + 36B	39-50
26T + 30B	36-52
26T + 36B	39-60
26T + 24B + #60 Ext	53-71
26T + 36B + #60 Ext	64-82

For 3" to 20" Valves
5¼" Shaft, Screw Type

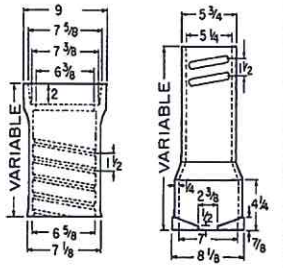

6860 SCREW TYPE VALVE BOX
Cast Iron - 3 piece

Components)	Extension Height
10T + 12B	27-37
10T + 18B	33-42
16T + 24B	39-49
16T + 30B	45-54
16T + 36B	51-60
26T + 30B	45-66
26T + 36B	51-72

NOTE: Base Required, Order Separately

For 4" to 12" Valves
5¼" Shaft, Slip Type

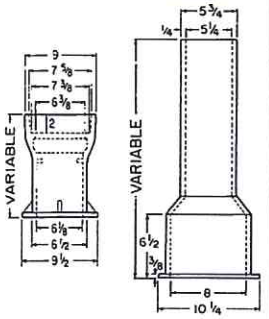

6855 SLIP TYPE VALVE BOX
Cast Iron - 2 piece

Components	Extension Height
10T + 15B	19-22
10T + 24B	27-32
16T + 24B	27-37
16T + 30B	33-43
16T + 36B	39-50
26T + 30B	36-52
26T + 36B	39-60
26T + 24B + #60 Ext	53-71
26T + 36B + #60 Ext	64-82

For 4" to 12" Valves
5¼" Shaft, Slip Type

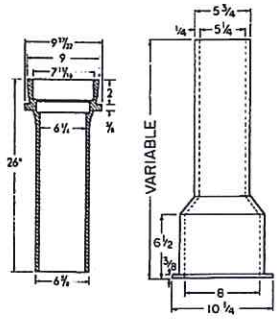

7126 SLIP TYPE VALVE BOX

Components	Extension Height
26T + 24B	28-48
26T + 30B	34-54
26T + 36B	40-60
26T + 24B + #60 Ext	52-72
26T + 36B + #60 Ext	60-80

NOTE: Use the 6855 Bottoms with these Tops

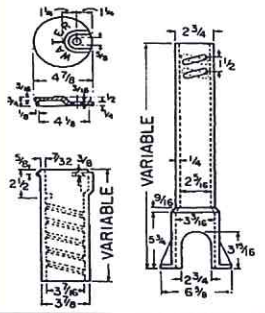

For ½" to 2" Curbstops

6500 SCREW TYPE CURB / SERVICE BOX

Componets	Extension In Inches
18T & 27B	30-42
18T & 33B	36-48
24T & 33B	36-54
24T & 39B	42-60
30T & 39B	41-64

*Enlarged Base Available

T = Top
B = Bottom
EXT = Extension

Tyler: 11910 CR 492-Tyler,TX 75706-(800) 527-8478 **Anniston:** 1501 W. 17th Street-Anniston, AL 36201-(800) 226-7601
Corona: 1001 El Camino Ave.-Corona, CA 92879-(866) 527-8471 **Portland:** 6204 N. Marine Dr.-Portland, OR 97203-(866) 527-8471
www.tylerunion.com

TYLER UNION®

6860 SERIES
CAST IRON THREE-PIECE VALVE BOXES
for 3" through 20" valves, 5 1/4" shaft, screw-type
*****(Base required, order separately)**

TYLER UNION valve boxes are available either pre-assembled or as individual tops and bottoms. For assembled boxes, The UPC codes shown represent a combination of one top and one bottom in the sizes shown. For unassembled boxes, the UPC code represents only a top or a bottom, not a complete box. Therefore, unassembled boxes require ordering tops and bottoms separately.

****NOTE: Domestic Valve Boxes available in Heavy Duty Only**
Non-Domestic available in Standard or Heavy Duty

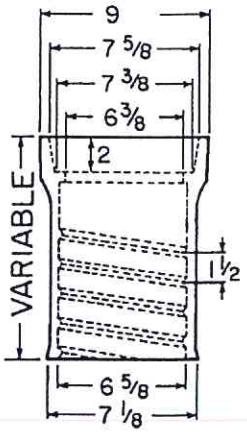

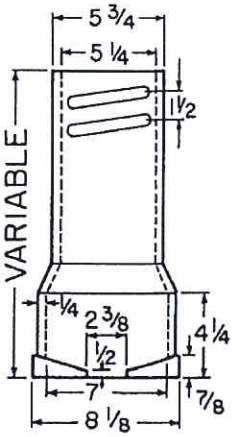

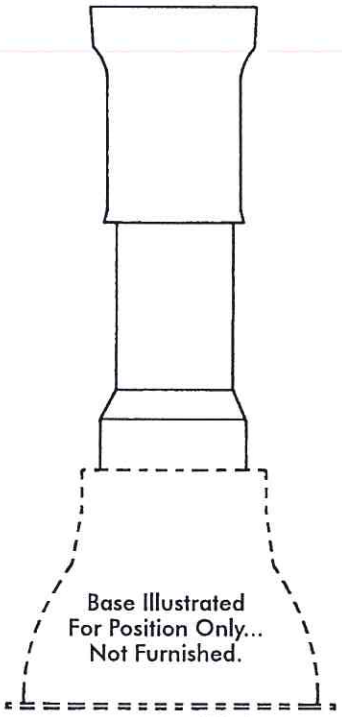

Box Assembled (Less Lid)

Box (Components)	Extension Height	*(D-HD)UPCode 670610	*(ND-HD)UPCode 670610	Wt	*(ND-Std.)UPCode 670610	Wt
AA (10T + 12B)	27-37	145912	----	42	136668	29
A (16T + 18B)	33-42	145929	----	65	136651	38
B (16T + 24B)	39-49	145936	----	69	136675	51
C (16T + 30B)	45-54	145943	----	73	136682	55
CC (16T + 36B)	51-60	145950	----	75	136699	59
D (26T + 30B)	45-66	145967	502357	88	136811	71
DD (26T + 36B)	51-72	145974	502364	90	136828	75
E (16T+24B+60 Ext)	63-72	145981	----	105	136835	80
F (26T+24B+60 Ext)	63-84	145998	----	120	136842	96
G (26T+36B+60 Ext)	74-94	146001	502371	126	136859	104

Lids marked "WATER" will ship unless otherwise specified:
Also available 5¼" Drop Lids"
1)WATER OMA 2)SEWER 3)MWW
4)PLAIN 5)GAS 6)REUSE
Note: Special Lettering Available
Contact Tyler Union for Setup Charge

*NOTE: D=Domestic ND=Non-Domestic HD=Heavy Duty Weight Std=Standard Weight
***NOTE: Base Selection Guide (#4 Base for 6" valves or less) (#6 Base for 12" valves or less) (#160 Base for 24" valves or less)

TYLER UNION®

6860 SERIES
CAST IRON THREE-PIECE VALVE BOXES
for 3" through 20" valves, 5 1/4" shaft, screw-type
(Base required, order separately)

SEPARATE UPCODES for VALVE BOX TOPS ONLY (Less Lids)

Box	TOP Length	**(D-HD) UPCode 670610	Wt	**(ND-HD) UPCode 670610	Wt	**(ND-Std.) UPCode 670610	Wt
AA	(10T)	144939	23	502142	23	112402	15
A	(10T)	144939	23	502142	23	112402	15
B	(16T)	144946	36	502159	36	112419	22
C	(16T)	144946	36	502159	36	112419	22
CC	(16T)	144946	36	502159	36	112419	22
D	(26T)	144953	51	502166	52	112426	38
DD	(26T)	144953	51	502166	52	112426	38
E	(16T)	144946	36	502159	36	112419	22
F	(26T)	144953	51	502166	52	112426	38
G	(26T)	144953	51	502166	52	112426	38

**NOTE: D=Domestic ND=Non-Domestic HD=Heavy Duty Weight Std.=Standard Weight

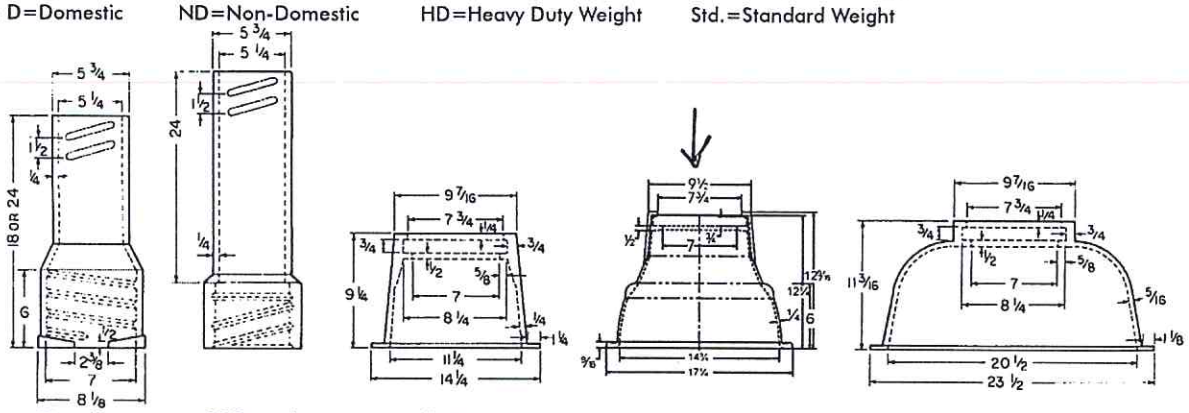

58 and 59 Extension | 60 Extension | #4 Base | #6 Base (Standard) | #160 Base

EXTENSIONS

Item/Description	UPCode 670610	Height Increase	Wt
#58 Screw-Type	145141	14	29
→ #59 Screw-Type	145158	18	30
#60 Screw-Type	145059	24	37
#60 Screw-Type	*112389	24	29
#60 Screw-Type	* Call	24	36

*Non-Domestic

BASES

Item/Description	*(D-HD)UPCode 670610	*(ND)UPCode 670610	Wt	*(ND-Std)UPCode 670610	Wt
#4, 11¼" Wide	145653	----	34	381532	22
#6, 14¾" Wide	145660	----	45	381525	36
#160, 20½" Wide	145684	----	68	256861	55

*D=Domestic ND=Non-Domestic HD=Heavy Duty Weight Std.=Standard Weight

SEPARATE UPCODES for VALVE BOX BOTTOMS ONLY

Box	Bottom Length	**(D-HD) UPCode 670610	Wt	**(ND-HD) UPCode 670610	Wt	**(ND-Std.) UPCode 670610	Wt
AA	(12B)	145134	19	---	---	250524	14
A	(18B)	145141	29	505594	29	250517	25
B	(24B)	145158	33	502388	33	136958	29
C	(30B)	145165	37	502395	37	136613	33
CC	(36B)	145172	39	502401	39	136620	35
D	(30B)	145165	37	502395	37	136613	33
DD	(36B)	145172	39	502401	39	136620	35
E	(24B)	145158	33	502388	33	136958	29
F	(24B)	145158	33	502388	33	136958	29
G	(36B)	145172	39	502401	39	136620	35
	(48B)	---	---	---	---	452713	65
	(60B)	---	---	---	---	452720	91

**NOTE: D=Domestic ND=Non-Domestic HD=Heavy Duty Weight Std=Standard Weight

TYLER UNION®

CAST IRON - STANDARD, SPECIAL DROP, AND LOCK LIDS

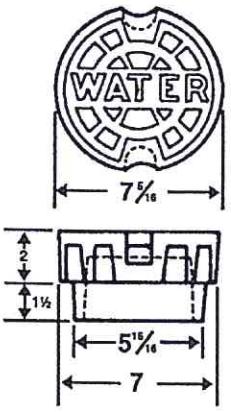

Drop Lid

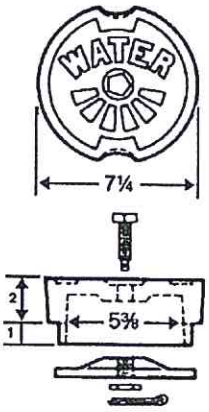

Lock Lid

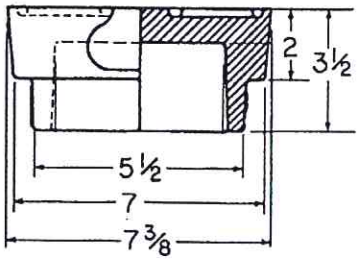

5¼" MWW DROP LID

*(D-HD)UPCode 670610	*(ND-HD)UPCode 670610	Wt.
145370	136880	12

*D=Domestic ND=Non-Domestic HD=Heavy Duty Weight

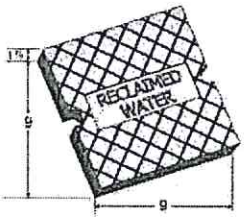

RECLAIMED WATER LID

*(D-HD)UPCode 670610
458892

NOTE: Square Valve Box Tops for this Lid will be available in 2012. Call Tyler Union for information.
*D=Domestic HD=Heavy Duty Weight

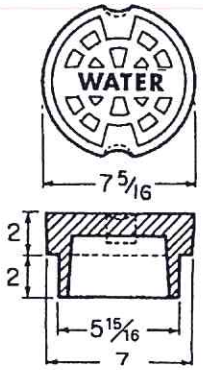

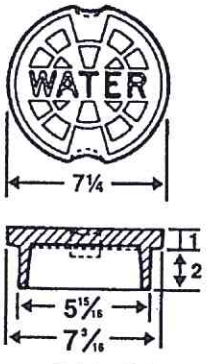

1 1/8" Lid

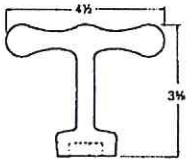

WRENCH
Fits Standard Waterworks Pentagon Head 27/32" Brass Screws

UPCode 670610	Ship Code	Description	Wt
144908	S	Wrench	0.5

5¼" OMA DROP LID**

*(D-HD)UPCode 670610	*(ND-HD)UPCode 670610	Special Markings	Wt.
145301	136927	**WATER OMA	12

*D=Domestic ND=Non-Domestic HD=Heavy Duty wt.
**OMA marking is inside lid.

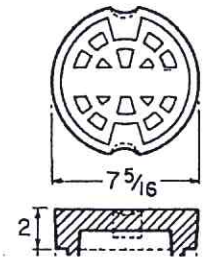

LIDS (WATER)

Item/Description	*(D-HDUP)Code 670610	Wt	*(ND-Std)UPCode 670610	Wt	*(ND-HD)UPCode 670610	Wt
5¼ Drop Lid	145325	12	136910	9	---	---
5¼ Lock Lid	145462	11	136866	11	---	---
1⅛ Lid**	145509	11	112532	9	---	---

(Use with 1⅛" Riser Only)
*NOTE: D=Domestic ND=Non-Domestic HD=Heavy Duty Weight Std=Standard Weight

5¼" DROP LID W/SPECIAL MARKINGS**

*(D-HD)UPCode 670610	Wt.	*(ND-Std)UPCode 670610	Wt.	Special Mark
145332	12	136873	9	GAS
145349	12	136903	9	SEWER
145356	12	136897	9	PLAIN
458975	12	---	---	REUSE

**Lids marked with "WATER" will be shipped unless otherwise specified.

LISTED FM APPROVED c LISTED

Complies with AWWA C509

4"-12" R/S VALVE TYTON ENDS NRS GENERAL DIMENSIONS

KENNEDY VALVE MODEL KS-FW

8901SS STANDARD
8901PSS W/POST PLATE

PUSH-ON FOR DUCTILE IRON PIPE

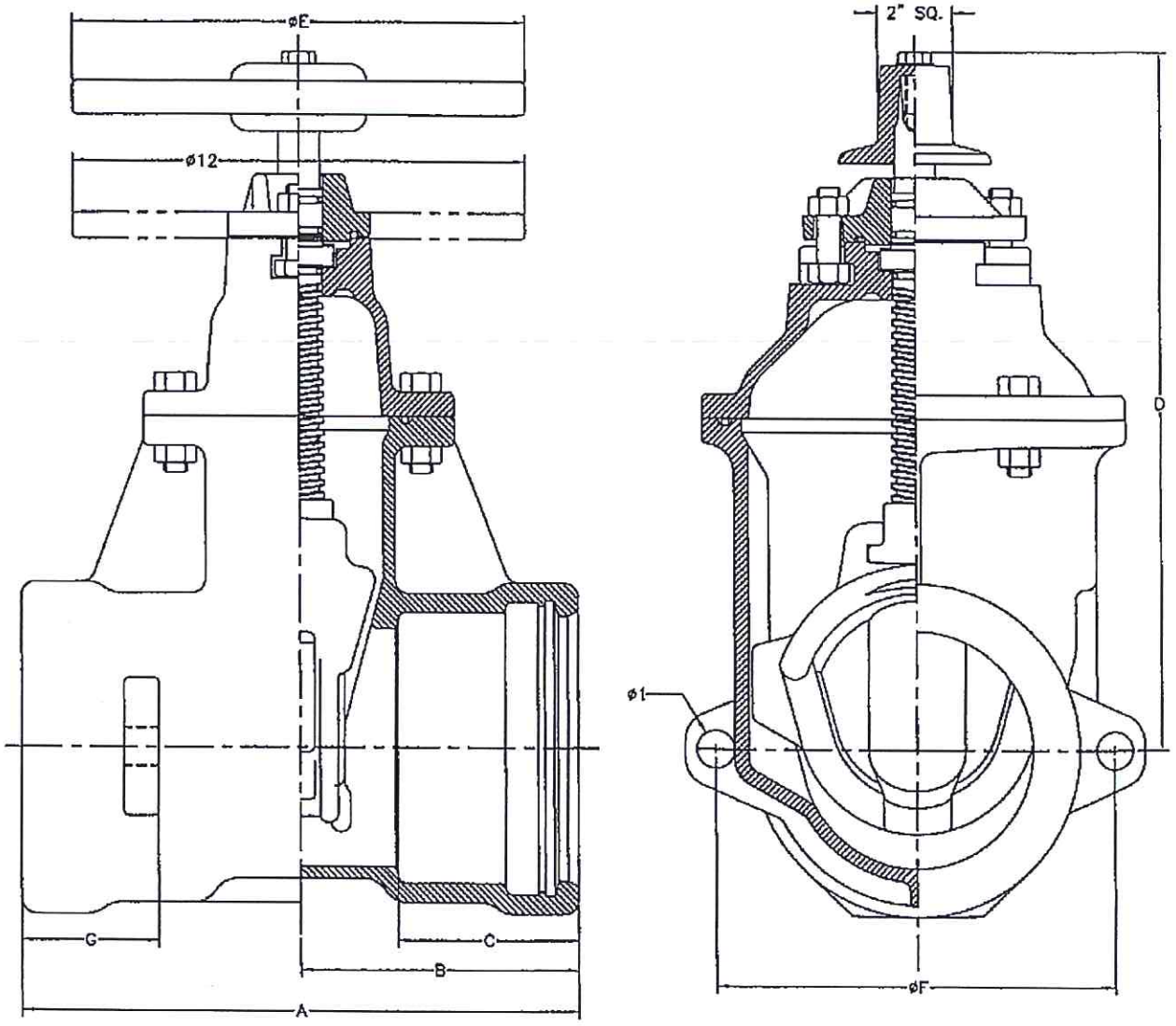

VALVE SIZE	A	B	C	D	E	F	G	WEIGHT*
4	13 1/4	6 5/8	4.34	14 3/4	10	8 3/16	3 3/4	82
6	14 3/4	7 3/8	4.75	19	12	10 7/8	3 3/4	139
8	17 1/8	8 9/16	5.70	22 1/2	14	12 7/8	4 1/2	216
10	19 3/8	9 11/16	6.19	26 1/2	18	15 15/16	5 1/8	359
12	20 7/8	10 7/16	6.19	30	18	17 7/16	5 3/8	501

*ADD 16 LBS. FOR INDICATOR POST PLATE

LISTED FM APPROVED c LISTED

Valves comply with AWWA C509

4"-12" R/S VALVE NRS FLANGE X TYTON ENDS GENERAL DIMENSIONS

KENNEDY VALVE MODEL KS-FW

8902SS **STANDARD**
8902PSS **W/POST PLATE**

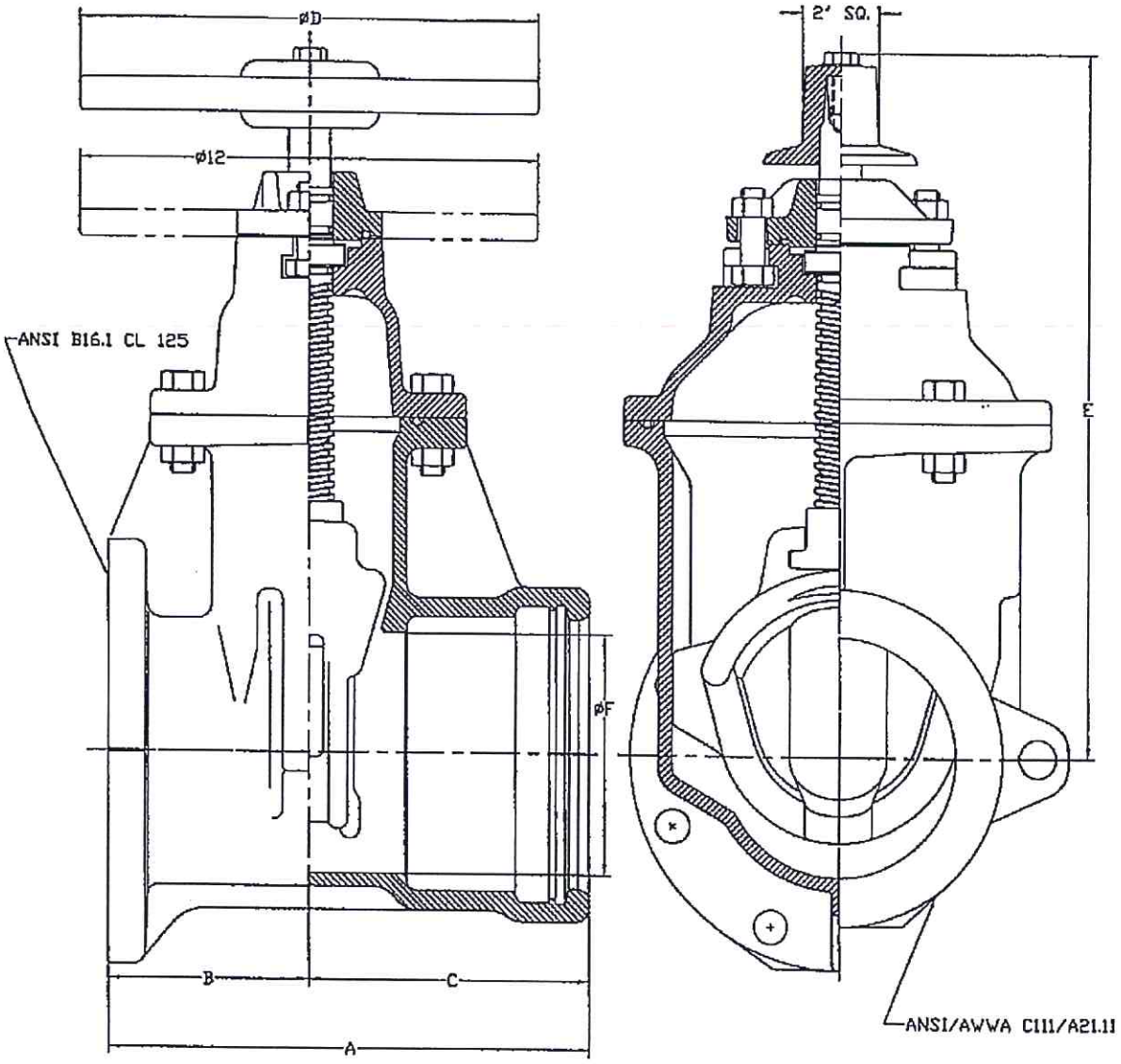

VALVE SIZE	A	B	C	D	E	F	WEIGHT*
4	11 1/8	4 1/2	6 5/8	10	14 3/4	4 1/4	85
6	12 5/8	5 1/4	7 3/8	12	19	6 1/4	139
8	14 5/16	5 3/4	8 9/16	14	22 1/2	8 1/4	219
10	16 3/16	6 1/2	9 11/16	18	26 1/2	10 1/4	372
12	17 7/16	7	10 7/16	18	30	12 1/4	515

*ADD 16 LBS. FOR INDICATOR POST PLATE

LISTED FM APPROVED LISTED

Complies with applicable requirements of AWWA C509

*Face to face dimensions conform to ASME B16.10

2" - 12" R/S VALVE NRS FLANGED ENDS GENERAL DIMENSIONS

KENNEDY VALVE MODEL KS-FW

8561ASS **W/HANDWHEEL**
8561ANSS **W/NUT**
8701ASS **W/POST PLATE (3-12")**

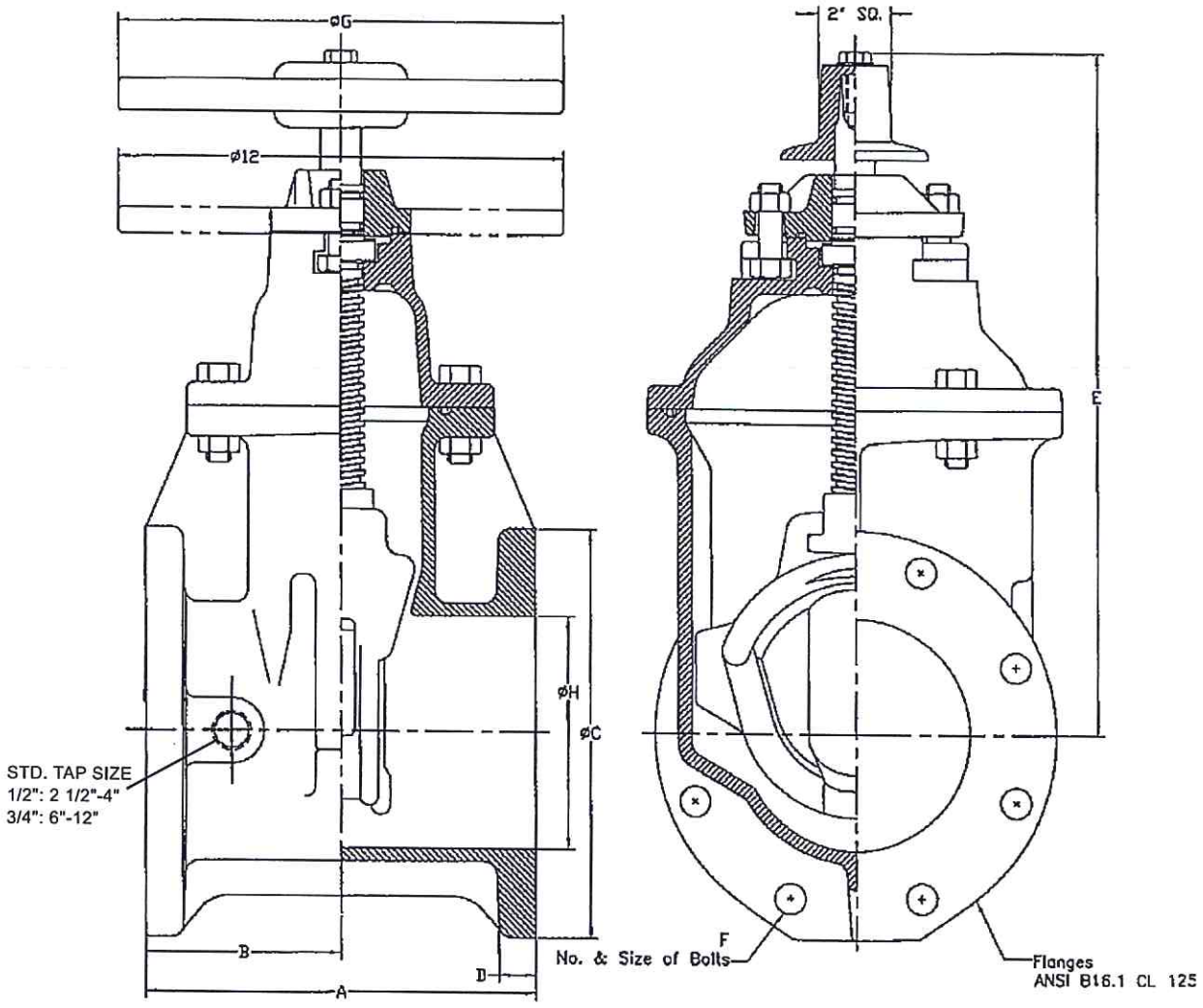

ALL FLANGE VALVES TAPPED & PLUGGED @ POSITION "A"

VALVE SIZE	* A	B	C	D	E	F	G	H	WEIGHT*
2	7	3 1/2	6	11/16	10 7/8	4 5/8	7 1/4	2	41
2 1/2	7 1/2	3 3/4	7	11/16	11 3/8	4 5/8	7 1/4	2 1/2	49
3	8	4	7 1/2	3/4	12 3/8	4 5/8	10	3	62
4	9	4 1/2	9	15/16	14 3/4	8 5/8	10	4 1/4	99
6	10 1/2	5 1/4	11	1	19	8 3/4	12	6 1/4	142
8	11 1/2	5 3/4	13 1/2	1 1/8	22 1/2	8 3/4	14	8 1/4	239
10	13	6 1/2	16	1 3/16	26 1/2	12 7/8	18	10 1/4	408
12	14	7	19	1 1/4	30	12 7/8	18	12 1/4	554

NOTE: ADD 16 LBS. FOR INDICATOR POST PLATE (3"-12" ONLY)

LISTED FM APPROVED c UL LISTED

Complies with applicable requirements of AWWA C509

2"-3" R/S VALVE THREADED ENDS NRS GENERAL DIMENSIONS

KENNEDY VALVE MODEL KS-FW

8057SS **2" NUT**
8057WSS **HANDWHEEL**

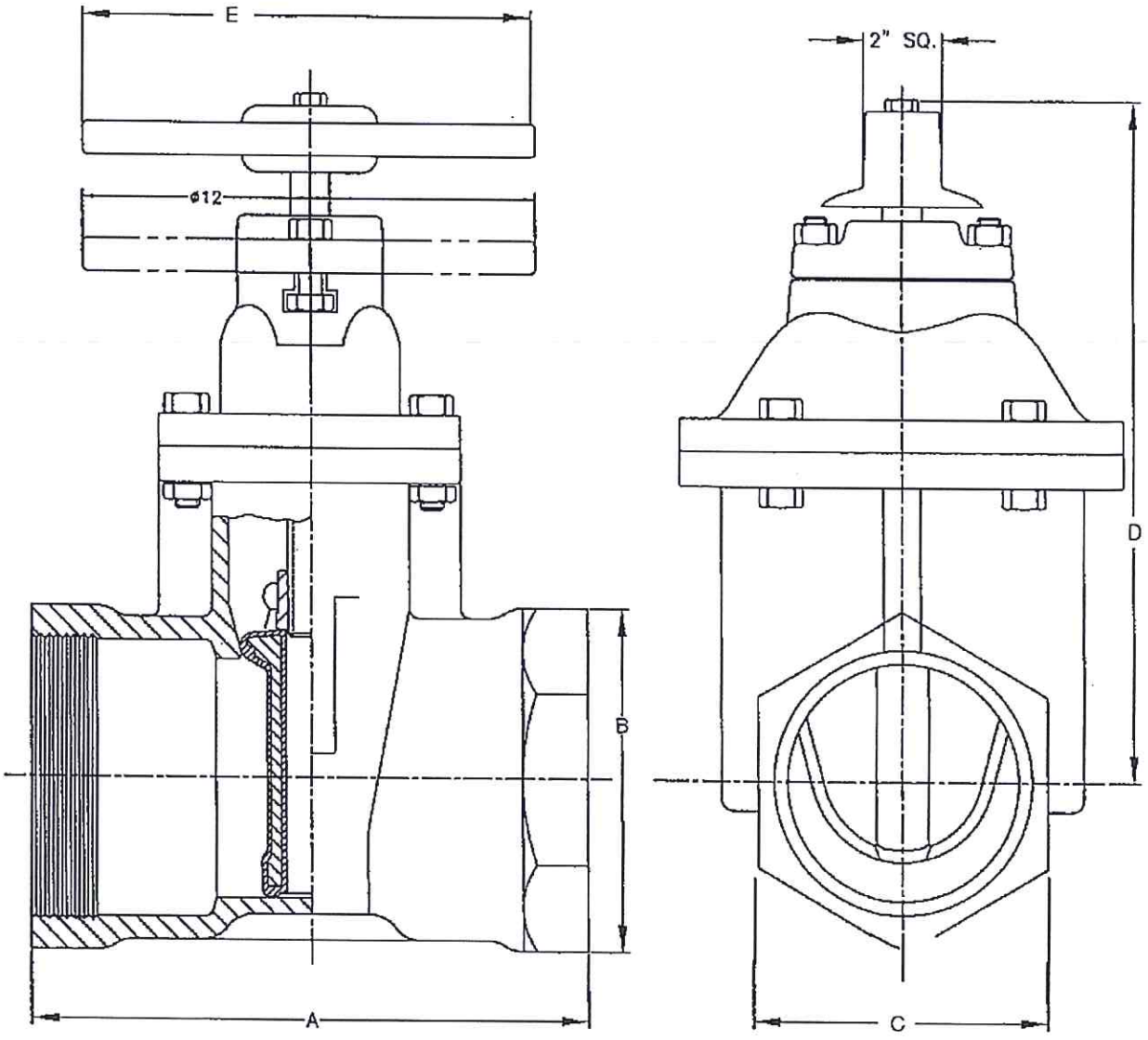

VALVE SIZE	A	B	C	D	E	WEIGHT*
2	5 1/4	4 1/8	3 9/16	10 7/8	7 1/4	20
2 1/2	7	5 3/16	4 1/2	11 3/8	7 1/4	40
3	7 1/8	5 5/8	4 7/8	12 3/8	10	47

*ADD 16 LBS. FOR INDICATOR POST PLATE (3" ONLY)

SUBMITTAL DATA SHEET

Two Piece Brass Saddle - 3805

C900 PVC x AWWA/CC

MODEL	SIZE	A	B	C	D	E	F
3805	4 X 1/2	1/2	1.23	2.38	1.50	HEX	4.800
3805	4 X 3/4	3/4	1.23	2.38	1.50	HEX	4.800
3805	4 X 1	1	1.23	2.56	1.72	HEX	4.800
3805	4 X 1 1/2	1 1/2	1.50	3.46	2.52	OCT	4.800
3805	4 X 2	2	1.50	3.96	3.10	OCT	4.800
3805	6 X 1/2	1/2	1.28	2.26	1.50	HEX	6.900
3805	6 X 3/4	3/4	1.28	2.26	1.50	HEX	6.900
3805	6 X 1	1	1.24	2.56	1.72	HEX	6.900
3805	6 X 1 1/2	1 1/2	1.63	3.46	2.52	OCT	6.900
3805	6 X 2	2	1.63	3.96	3.10	OCT	6.900
3805	8 X 3/4	3/4	1.26	2.38	1.50	HEX	9.050
3805	8 X 1	1	1.26	2.56	1.72	HEX	9.050
3805	8 X 1 1/2	1 1/2	1.50	3.96	3.10	OCT	9.050
3805	8 X 2	2	1.50	3.96	3.10	OCT	9.050
3805	10 X 3/4	3/4	2.32	2.92	1.69	HEX	11.100
3805	10 X 1	1	2.32	2.92	1.69	HEX	11.100
3805	10 X 1 1/2	1 1/2	2.30	4.37	3.10	HEX	11.100
3805	10 X 2	2	2.30	4.37	3.10	HEX	11.100
3805	12 X 3/4	3/4	2.32	2.92	1.69	HEX	13.200
3805	12 X 1	1	2.32	2.92	1.69	HEX	13.200
3805	12 1 1/2	1 1/2	2.30	4.37	3.10	HEX	13.200
3805	12 X 2	2	2.30	4.37	3.10	HEX	13.200

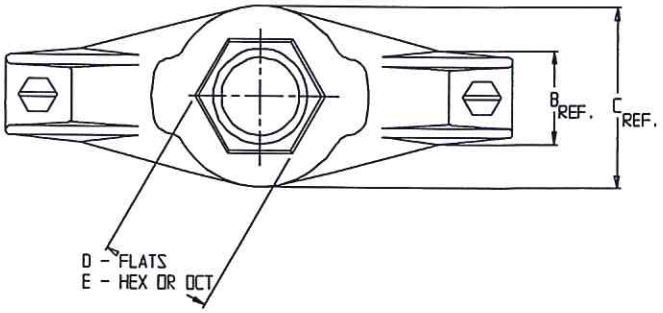

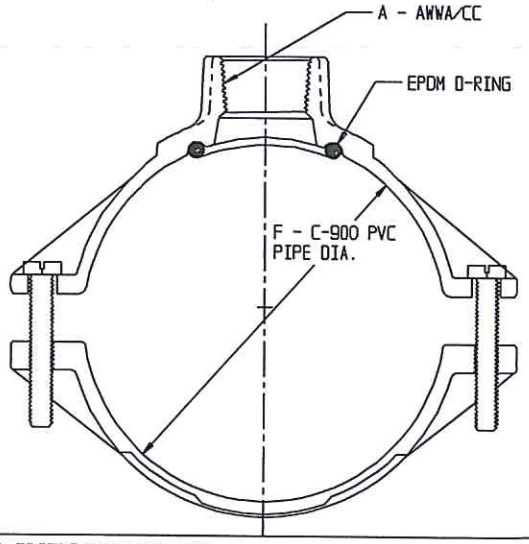

SUBMITTAL INFORMATION

- Manufactured in compliance with ANSI/AWWA C800 (latest revision)
- Brass components conform to ASTM B62 and ASTM B584, UNS C83600 -85-5-5-5 (latest revision)
- Certified to NSF/ANSI 61
- Silicon Bronze bolts
- EPDM o-ring
- Pipe and tap size, and thread type identified on saddle
- Outlet boss with large wrench flats
- Made in North America

A.Y. McDonald Mfg. CO.
P.O. Box 508
Dubuque, IA 52004-508

Toll Free: 1-800-292-2737
Fax: 1-800-832-9296
Hours: 7:00 a.m. – 5:00 p.m., CST

sales@aymcdonald.com
www.aymcdonald.com

A.Y. McDonald considers the information on this assembly drawing correct when published. Item and option availability, including specifications, are subject to change without notice.

Submitted by:

SUBMITTAL DATA SHEET

NL Service Fitting – 73206

AWWA/CC

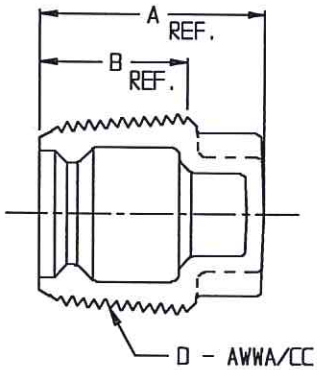

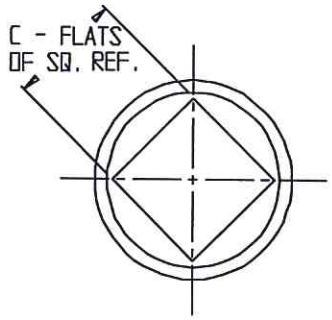

MODEL	SIZE	A	B	C	D
73206	1/2	1.40	1.03	.56	1/2 - 14
73206	5/8	1.62	1.08	.63	5/8 - 14
73206	3/4	1.62	1.02	.63	3/4 - 14
73206	1	1.69	1.11	.86	1 - 12
73206	1 1/4	1.94	1.36	.94	1 1/4 - 11 1/2
73206	1 1/2	2.00	1.50	1.06	1 1/2 - 11 1/2
73206	2	2.00	1.50	1.13	2 - 11 1/2

SUBMITTAL INFORMATION

- Manufactured in compliance with ANSI/AWWA C800 (latest revision)
- Brass components in contact with potable water conform to ASTM B584, UNS C89833 (latest revision) and identified with "NL"
- Certified to NSF/ANSI 61 and NSF/ANSI 372
- Brass components not in contact with potable water conform to ASTM B62 and ASTM B584, UNS C83600 -85-5-5-5 (latest revision)
- Large wrench flats provided for proper installation
- Made in the United States of America

A.Y. McDonald Mfg. Co.
P.O. Box 508
Dubuque, IA 52004-508

Toll Free: 1-800-292-2737
Fax: 1-800-832-9296
Hours: 7:00 a.m. – 5:00 p.m., CST

sales@aymcdonald.com
www.aymcdonald.com

A.Y. McDonald considers the information on this assembly drawing correct when published. Item and option availability, including specifications, are subject to change without notice.

Submitted by:

SUBMITTAL DATA SHEET

NL Ball Style Corporation Stop – 74701B-3Q

AWWA/CC x -3Q PEP Compression

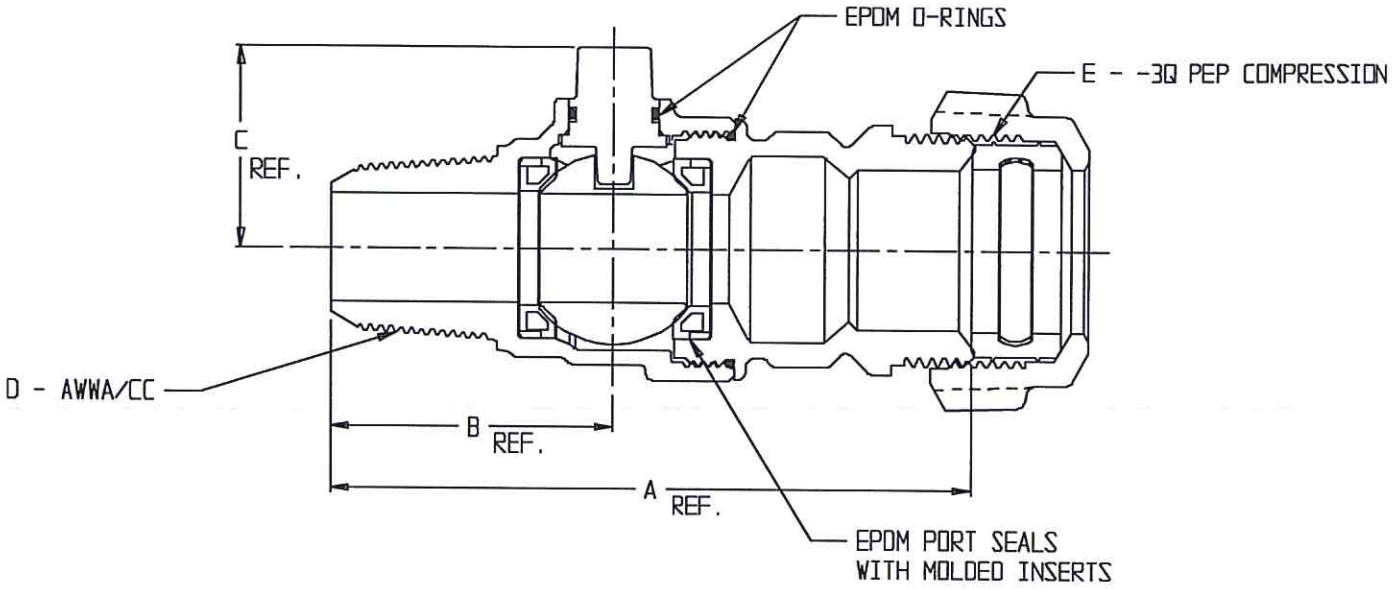

MODEL	SIZE	A	B	C	D	E
74701B-3Q	3/4	4.44	1.96	1.39	3/4	3/4
74701B-3Q	1	4.64	2.15	1.50	1	1

SUBMITTAL INFORMATION

- Manufactured in compliance with ANSI/AWWA C800 (latest revision)
- Brass components in contact with potable water conform to ASTM B584, UNS C89833 (latest revision) and identified with "NL"
- Certified to NSF/ANSI 61 and NSF/ANSI 372
- Brass components not in contact with potable water conform to ASTM B62 and ASTM B584, UNS C83600 -85-5-5-5 (latest revision)
- PTFE coated brass ball rotates 360°
- Rated for 300 PSIG water pressure
- Blow out proof EPDM port seals
- End piece joint sealed with an EPDM o-ring and thread locker
- Made in the United States of America

A.Y. McDonald Mfg. Co.
P.O. Box 508
Dubuque, IA 52004-508

Toll Free: 1-800-292-2737
Fax: 1-800-832-9296
Hours: 7:00 a.m. – 5:00 p.m., CST

sales@aymcdonald.com
www.aymcdonald.com

A.Y. McDonald considers the information on this assembly drawing correct when published. Item and option availability, including specifications, are subject to change without notice.

Submitted by:

SUBMITTAL DATA SHEET

NL Ball Style Curb Stop – 76104-3Q

-3Q PEP Compression x -3Q PEP Compression

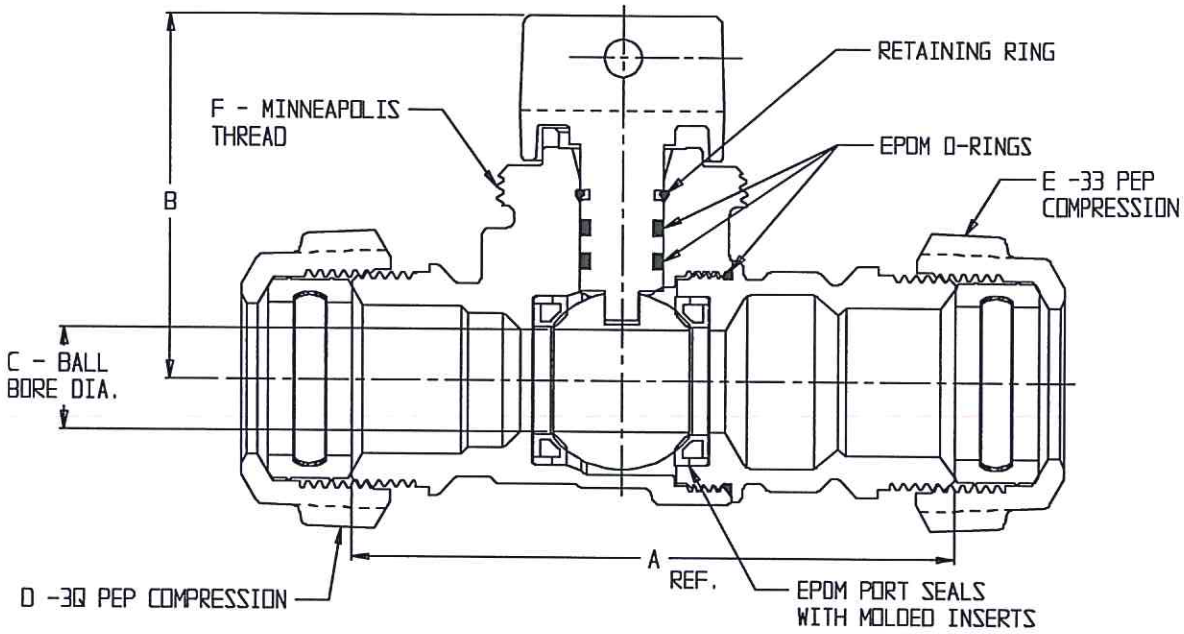

MODEL	SIZE	A	B	C	D	E	F
76104-3Q	3/4	4.48	2.69	.75	3/4	3/4	1 1/2
76104-3Q	1	4.80	2.65	1.00	1	1	1 1/2

SUBMITTAL INFORMATION

- Manufactured in compliance with ANSI/AWWA C800 (latest revision)
- Brass components in contact with potable water conform to ASTM B584, UNS C89833 (latest revision) and identified with "NL"
- Certified to NSF/ANSI 61 and NSF/ANSI 372
- Brass components not in contact with potable water conform to ASTM B62 and ASTM B584, UNS C83600 -85-5-5-5 (latest revision)
- PTFE coated brass ball
- Rated for 300 PSIG water pressure
- Blow out proof EPDM port seals
- End piece joint sealed with an EPDM o-ring and thread locker
- Made in the United States of America

A.Y. McDonald Mfg. Co.
P.O. Box 508
Dubuque, IA 52004-508

Toll Free: 1-800-292-2737
Fax: 1-800-832-9296
Hours: 7:00 a.m. – 5:00 p.m., CST

sales@aymcdonald.com
www.aymcdonald.com

A.Y. McDonald considers the information on this assembly drawing correct when published. Item and option availability, including specifications, are subject to change without notice.

Submitted by:

SUBMITTAL DATA SHEET

Curb Boxes – 5614

Minneapolis Pattern

MODEL NO.	SIZE	A-RANGE
5614	2 1/2	1 1/2' TO 2 1/2'
5614	3	2' TO 3'
5614	3 1/2	2 1/2' TO 3 1/2'
5614	4	3' TO 4'
5614	4 1/2	3 1/2' TO 4 1/2'
5614	5	4' TO 5'
5614	5 1/2	4 1/2' TO 5 1/2'
5614	6	5' TO 6'
5614	6 1/2	5 1/2' TO 6 1/2'
5614	7	6' TO 7'
5614	7 1/2	6 1/2' TO 7 1/2'
5614	8	7' TO 8'
5614	8 1/2	7 1/2' TO 8 1/2'
5614	9	8' TO 9'
5614	9 1/2	8 1/2' TO 9 1/2'
5614	10	9' TO 10'

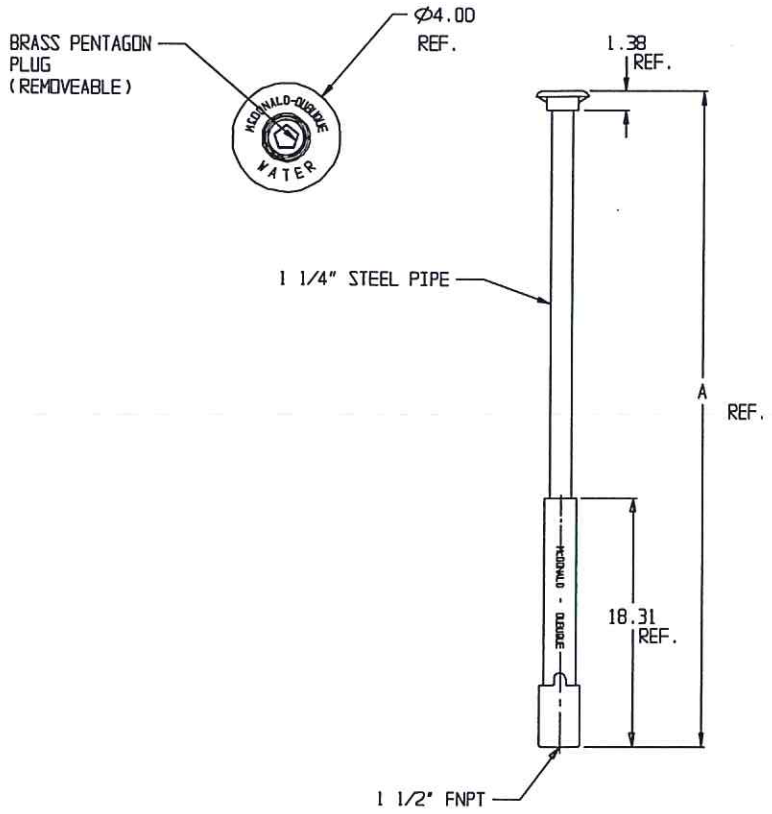

SUBMITTAL INFORMATION

- Brass components conform to ASTM B62 and ASTM B584, UNS C83600 -85-5-5-5 (latest revision)
- Lid and Base made of Cast Iron per ASTM A48, Class 25
- Upper Section made of steel pipe
- Coated with black dip
- Made in North America

A.Y. McDonald Mfg. Co.
P.O. Box 508
Dubuque, IA 52004-508

Toll Free: 1-800-292-2737
Fax: 1-800-832-9296
Hours: 7:00 a.m. – 5:00 p.m., CST

sales@aymcdonald.com
www.aymcdonald.com

A.Y. McDonald considers the information on this assembly drawing correct when published. Item and option availability, including specifications, are subject to change without notice.

Submitted by:

SUBMITTAL DATA SHEET

NL Service Fitting – 74758-3Q

-3Q PEP Compression x -3Q PEP Compression

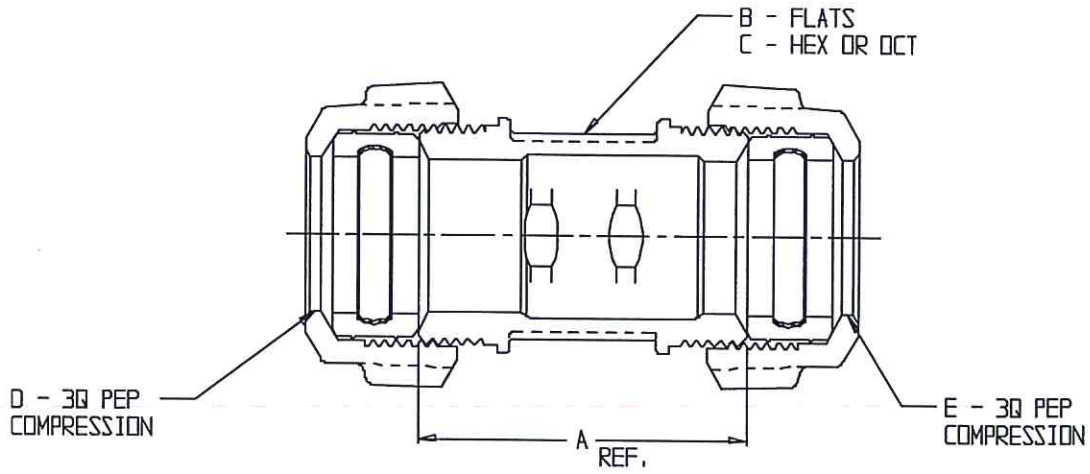

MODEL	SIZE	A	B	C	D	E
74758-3Q	3/4	2.40	1.38	OCT	3/4	3/4
74758-3Q	3/4 X 1	2.61	1.85	OCT	3/4	1
74758-3Q	1	2.56	1.69	OCT	1	1

SUBMITTAL INFORMATION

- Manufactured in compliance with ANSI/AWWA C800 (latest revision)
- Brass components in contact with potable water conform to ASTM B584, UNS C89833 (latest revision) and identified with "NL"
- Certified to NSF/ANSI 61 and NSF/ANSI 372
- Brass components not in contact with potable water conform to ASTM B62 and ASTM B584, UNS C83600 -85-5-5-5 (latest revision)
- Large wrench flats provided for proper installation
- Made in the United States of America

A.Y. McDonald Mfg. Co.
P.O. Box 508
Dubuque, IA 52004-508

Toll Free: 1-800-292-2737
Fax: 1-800-832-9296
Hours: 7:00 a.m. – 5:00 p.m., CST

sales@aymcdonald.com
www.aymcdonald.com

A.Y. McDonald considers the information on this assembly drawing correct when published. Item and option availability, including specifications, are subject to change without notice.

Submitted by:

SUBMITTAL DATA SHEET

NL Service Fitting – 74758-33-55

-33 PEP Compression x -55 IP Compression

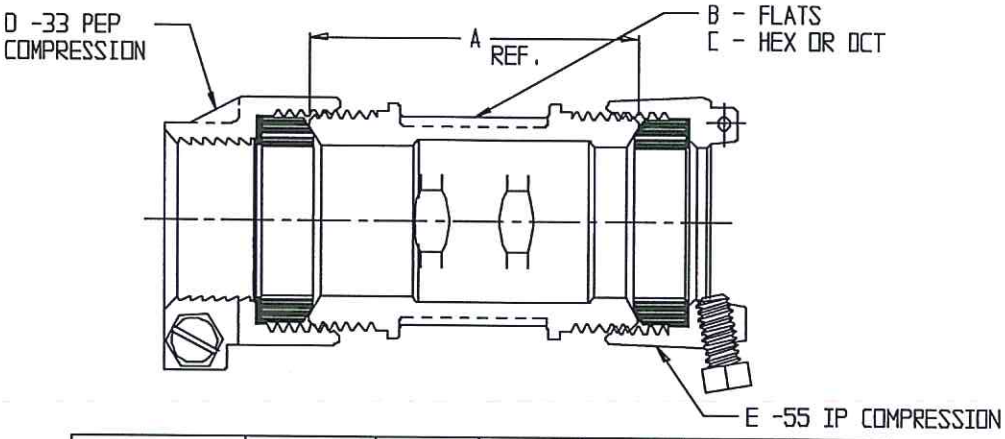

MODEL	SIZE	A	B	C	D	E
74758-33-55	3/4	2.40	1.38	OCT	3/4	3/4
74758-33-55	3/4 X 2	2.96	3.05	OCT	3/4	2
74758-33-55	1	2.56	1.69	OCT	1	1
74758-33-55	1 X 3/4	2.61	1.85	OCT	1	3/4

SUBMITTAL INFORMATION

- Manufactured in compliance with ANSI/AWWA C800 (latest revision)
- Brass components in contact with potable water conform to ASTM B584, UNS C89833 (latest revision) and identified with "NL"
- Certified to NSF/ANSI 61 and NSF/ANSI 372
- Brass components not in contact with potable water conform to ASTM B62 and ASTM B584, UNS C83600 -85-5-5-5 (latest revision)
- Large wrench flats provided for proper installation
- Made in the United States of America

A.Y. McDonald Mfg. Co.
P.O. Box 508
Dubuque, IA 52004-508

Toll Free: 1-800-292-2737
Fax: 1-800-832-9296
Hours: 7:00 a.m. – 5:00 p.m., CST

sales@aymcdonald.com
www.aymcdonald.com

A.Y. McDonald considers the information on this assembly drawing correct when published. Item and option availability, including specifications, are subject to change without notice.

Submitted by:

SUBMITTAL DATA SHEET

NL Service Fitting – 74779M-3Q

-3Q PEP Compression x MNPT

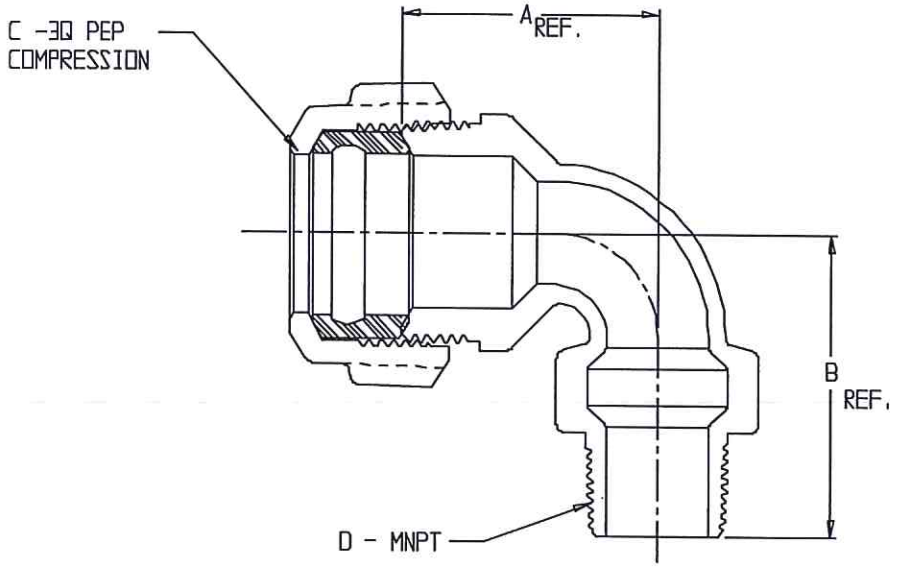

MODEL	SIZE	A	B	C	D
74779M-3Q	3/4	1.88	2.19	3/4	3/4
74779M-3Q	1	2.25	3.16	1	1

SUBMITTAL INFORMATION

- Manufactured in compliance with ANSI/AWWA C800 (latest revision)
- Brass components in contact with potable water conform to ASTM B584, UNS C89833 (latest revision) and identified with "NL"
- Certified to NSF/ANSI 61 and NSF/ANSI 372
- Brass components not in contact with potable water conform to ASTM B62 and ASTM B584, UNS C83600 -85-5-5-5 (latest revision)
- Large wrench flats provided for proper installation
- Insert stiffeners required on all flexible plastic connections

A.Y. McDonald Mfg. Co.
P.O. Box 508
Dubuque, IA 52004-508

Toll Free: 1-800-292-2737
Fax: 1-800-832-9296
Hours: 7:00 a.m. – 5:00 p.m., CST

sales@aymcdonald.com
www.aymcdonald.com

A.Y. McDonald considers the information on this assembly drawing correct when published. Item and option availability, including specifications, are subject to change without notice.

Submitted by:

SUBMITTAL DATA SHEET

No-Lead Ball Valves
Full Port Ball Valve - 72032T

Inlet: FNPT x **Outlet:** FNPT

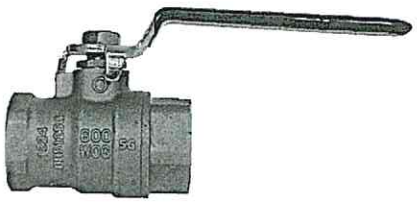

A.Y. McDonald Mfg. Co. No-Lead Full Port Ball Valves are constructed from heavy duty no-lead brass and can be used with a full range of liquids and gases in commercial, industrial, and residential applications. Full port valves allow for maximum flow with minimum pressure drop.

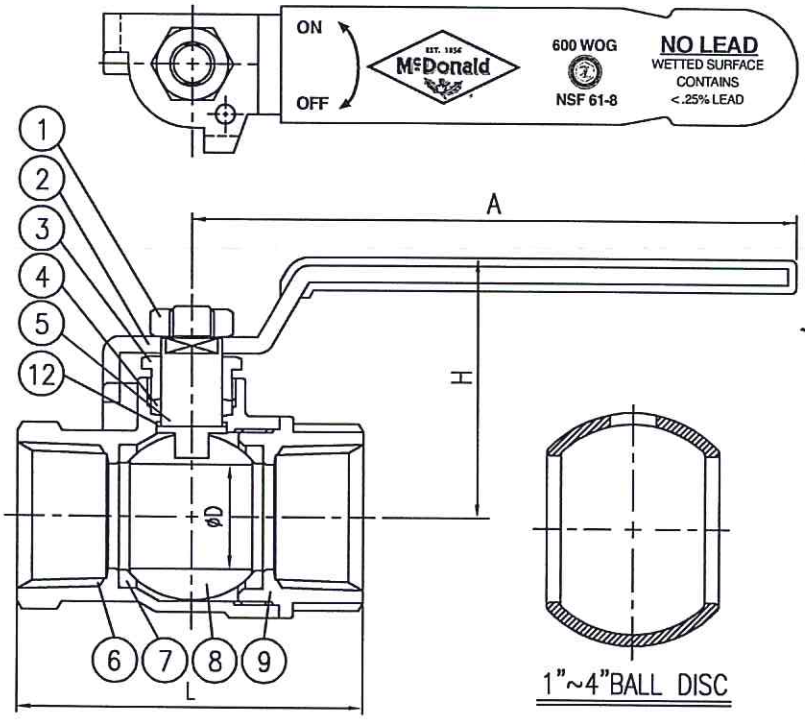

Dimensions

Size	L	H	D	A
1/4"	1.69	1.26	.35	2.36
3/8"	1.81	1.46	.39	3.15
1/2"	2.13	1.50	.50	3.15
3/4"	2.48	1.85	.75	4.33
1"	2.99	2.05	.98	4.33
1 1/4"	3.35	2.36	1.26	5.12
1 1/2"	3.62	2.56	1.50	5.12
2"	4.25	3.11	1.97	7.87
2 1/2"	5.16	3.50	2.48	7.87
3"	5.91	3.82	2.95	7.87
4"	6.26	3.82	2.95	7.87

Materials

No.	Part	Material
1	Nut	Steel
2	Handle	Steel
3	Stem Gland Screw	Brass
4	Stem Packing	Teflon
5	Stem	Brass
6	Body	No-Lead Brass
7	Ball Disc Packing	Teflon
8	Ball Disc	No-Lead Brass
9	End Plug	No-Lead Brass

SUBMITTAL INFORMATION

- 600 WOG
- Sizes: 1/4", 3/8", 1/2", 3/4", 1", 1 1/4", 1 1/2", 2", 2 1/2", 3", & 4"
- NSF / ANSI 61 Annex G & F
- Manufactured to MSS-SP-110
- Threads conform to ANSI B1.20.1
- Blow out proof stem
- Complies with NSF/ANSI 372-2010
- CSA approved 1/2" - 2"

NO-LEAD: The weighted average of the wetted surface of this no-lead product contacted by consumable water contains less than one quarter of one percent (0.25%) lead.

A.Y. McDonald Mfg. Co.
P.O. Box 508
Dubuque, IA 52004-0508

Toll Free: 1-800-292-2737
Fax: 1-800-832-9296
Hours: 7:00 a.m. - 5:00 p.m., CST

sales@aymcdonald.com
www.aymcdonald.com

A.Y. McDonald considers the information on this assembly drawing correct when published. Item and option availability, including specifications, are subject to change without notice.

Submitted by:

SUBMITTAL DATA SHEET

No-Lead Low Pressure Valves
Iron Y-Strainer – 2053T

FNPT x FNPT

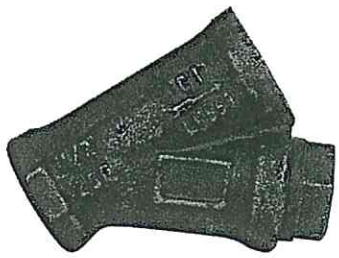

A.Y. McDonald Mfg. Co. Low Pressure Valves are constructed from heavy duty brass and are recommended for residential and commercial applications and provide positive shut-off with various inlet configurations.

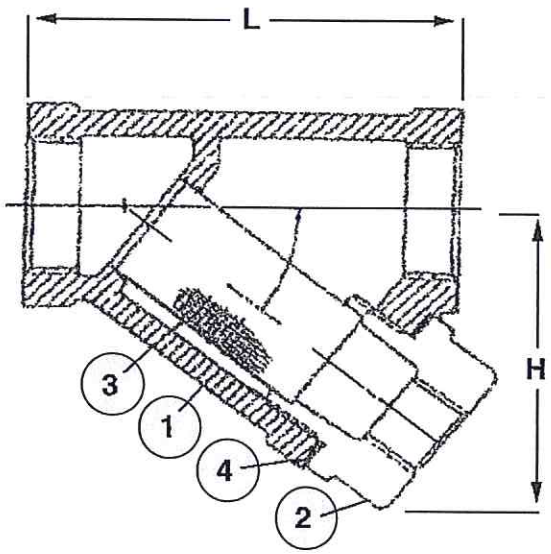

Dimensions

Size	A	B	C	D	E
1/2"	1.63	1.04	.72	1.85	.82
3/4"	1.85	1.26	.72	2.03	1.07
3/4" x 1/2"	1.85	1.26	.72	1.89	.82
1"	2.14	1.54	.72	2.27	1.32
1 1/4"	2.56	1.86	.85	2.52	1.57
1 1/2"	2.95	2.15	.97	2.53	1.83
2"	3.76	2.74	1.06	2.85	2.38

Materials

No.	Part	Material
1	Body	Cast Iron
2	Cover	Cast Iron
3	Screen	20 Mesh SS
4	Gasket	Non-Asbestos

SUBMITTAL INFORMATION

- Sizes: 1/2", 3/4", 1", 1 1/4", 1 1/2", 2"
- 500 WOG - 250 WSP
- Threads conform to ANSI B1.20.1
- 20 Mesh SS screen
- Directional

NO-LEAD: The weighted average of the wetted surface of this no-lead product contacted by consumable water contains less than one quarter of one percent (0.25%) lead.

A.Y. McDonald Mfg. Co.
P.O. Box 508
Dubuque, IA 52004-0508

Toll Free: 1-800-292-2737
Fax: 1-800-832-9296
Hours: 7:00 a.m. - 5:00 p.m., CST

sales@aymcdonald.com
www.aymcdonald.com

A.Y. McDonald considers the information on this assembly drawing correct when published. Item and option availability, including specifications, are subject to change without notice.

Submitted by:

SUBMITTAL DATA SHEET

Two Piece Brass Saddle - 3806

C900 PVC x FNPT

MODEL	SIZE	A	B	C	D	E	F
3806	4 X 3/4	3/4	1.23	2.38	1.50	HEX	4.800
3806	4 X 1	1	1.32	2.56	1.72	HEX	4.800
3806	4 X 1 1/2	1 1/2	1.50	3.46	2.34	OCT	4.800
3806	4 X 2	2	1.50	3.72	2.82	OCT	4.800
3806	6 X 3/4	3/4	1.28	2.26	1.50	HEX	6.900
3806	6 X 1	1	1.24	2.56	1.72	HEX	6.900
3806	6 X 1 1/2	1 1/2	1.63	3.46	2.34	OCT	6.900
3806	6 X 2	2	1.63	3.72	2.82	OCT	6.900
3806	8 X 3/4	3/4	1.26	2.38	1.50	HEX	9.050
3806	8 X 1	1	1.26	2.56	1.72	HEX	9.050
3806	8 X 1 1/2	1 1/2	1.50	3.86	3.10	OCT	9.050
3806	8 X 2	2	1.50	3.96	3.10	OCT	9.050
3806	10 X 3/4	3/4	2.32	2.92	1.69	HEX	11.100
3806	10 X 1	1	2.32	2.92	1.69	HEX	11.100
3806	10 X 1 1/2	1 1/2	2.30	4.37	3.10	HEX	11.100
3806	10 X 2	2	2.30	4.37	3.10	HEX	11.100
3806	12 X 3/4	3/4	2.32	2.92	1.69	HEX	13.200
3806	12 X 1	1	2.32	2.92	1.69	HEX	13.200
3806	12 X 1 1/2	1 1/2	2.30	4.37	3.10	HEX	13.200
3806	12 X 2	2	2.30	4.37	3.10	HEX	13.200

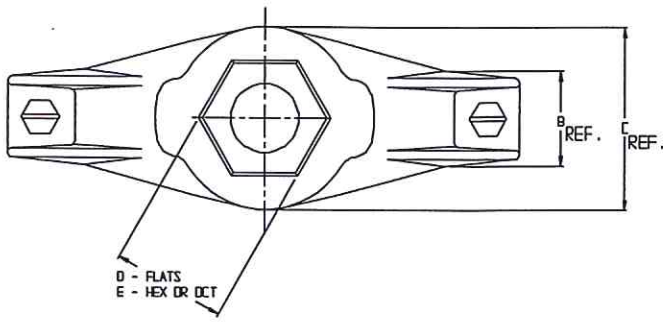

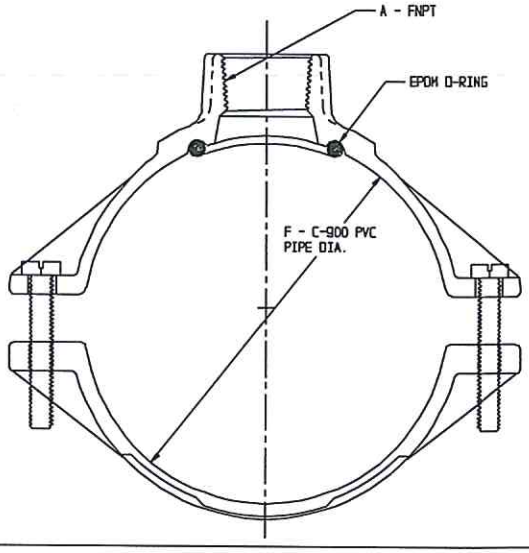

SUBMITTAL INFORMATION

- Manufactured in compliance with ANSI/AWWA C800 (latest revision)
- Brass components conform to ASTM B62 and ASTM B584, UNS C83600 -85-5-5-5 (latest revision)
- Certified to NSF/ANSI 61
- Silicon Bronze bolts
- EPDM o-ring
- Pipe and tap size, and thread type identified on saddle
- Outlet boss with large wrench flats
- Made in North America

A.Y. McDonald Mfg. CO.
P.O. Box 508
Dubuque, IA 52004-508

Toll Free: 1-800-292-2737
Fax: 1-800-832-9296
Hours: 7:00 a.m. – 5:00 p.m., CST

sales@aymcdonald.com
www.aymcdonald.com

A.Y. McDonald considers the information on this assembly drawing correct when published. Item and option availability, including specifications, are subject to change without notice.

Submitted by:

SUBMITTAL DATA SHEET

2" No-Lead Brass 125Lb. Threaded Hex Bushing
Hex Bushing – 72206

A.Y. McDonald Mfg. Co. No-Lead Pipe Fittings & Nipples are constructed from heavy duty brass and are rated for commerical, industrial and residential applications up to 125 WOG. Threads conform to ANSI B1.20.1 and fitting dimensions comply with ANSI B16.15.

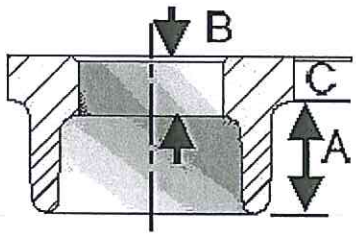

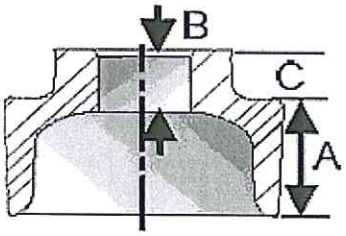

Item Number	Size	Dimensions A	B	C	Carton Qty	Weight Per Pcs.
72206	1" x 1/4"	0.75	0.32	0.30	5	0.136
72206	1" x 3/8"	0.75	0.36	0.30	5	0.119
72206	1" x 1/2"	0.75	0.43	0.25	5	0.124
72206	1" x 3/4"	0.75	0.50	0.25	5	0.102
72206	1 1/4" x 1/4"				5	0.155
72206	1 1/4" x 3/8"				5	0.134
72206	1 1/4" x 1/2"	0.80	0.43	0.34	5	0.214
72206	1 1/4" x 3/4"	0.80	0.50	0.28	5	0.210
72206	1 1/4" x 1"	0.80	0.58	0.28	5	0.150
72206	1 1/2" x 1/4"				5	0.134
72206	1 1/2" x 3/8"				5	0.202
72206	1 1/2" x 1/2"	0.83	0.43	0.37	5	0.231
72206	1 1/2" x 3/4"	0.83	0.50	0.37	5	0.234
72206	1 1/2" x 1"	0.83	0.58	0.31	5	0.278
72206	1 1/2" x 1 1/4"	0.83	0.71	0.31	5	0.184
72206	2" x 1/2"				5	0.499
72206	2" x 3/4"				5	0.350
72206	2" x 1"	0.88	0.58	0.41	5	0.400
72206	2" x 1 1/4"	0.88	0.67	0.34	5	0.441
72206	2" x 1 1/2"	0.88	0.70	0.34	5	0.348
72206	2 1/2" x 1"				1	0.542
72206	2 1/2" x 1 1/4"				1	0.760
72206	2 1/2" x 1 1/2"				1	0.523
72206	2 1/2" x 2"	1.07	0.75	0.37	1	0.509

SUBMITTAL INFORMATION

- **Standards**
  AWWA C800, ASTM B584 UNS Alloy C89833 (Casting), ASME B16.15 (Dimensions), ASME B1.20.1 (Threads)
- **Markings** - Manufacturer's logo, Size, Country of Origin, "NL"
- **ISO** - Manufacturing Facility is ISO 9001:2008 and ISO 14141
- **Size** - 2"
- **Hex** - In
- **Materials** - No-Lead Brass
- **Weight** - 0.6678

NO-LEAD: The weighted average of the wetted surface of this no-lead product contacted by consumable water contains less than one quarter of one percent (0.25%) lead.

EST. 1856 McDonald

A.Y. McDonald Mfg. Co.
P.O. Box 508
Dubuque, IA 52004-0508

Toll Free: 1-800-292-2737
Fax: 1-800-832-9296
Hours: 7:00 a.m. - 5:00 p.m., CST

sales@aymcdonald.com
www.aymcdonald.com

A.Y. McDonald considers the information on this assembly drawing correct when published. Item and option availability, including specifications, are subject to change without notice.

Submitted by:

SUBMITTAL DATA SHEET

No-Lead Low Pressure Valves
Hose Bibb - No Thread – 72002NT

MNPT X Plain End

A.Y. McDonald Mfg. Co. No-Lead Low Pressure Valves are constructed from heavy duty no-lead brass and are recommended for residential and commercial applications and positive shut-off with various inlet configurations.

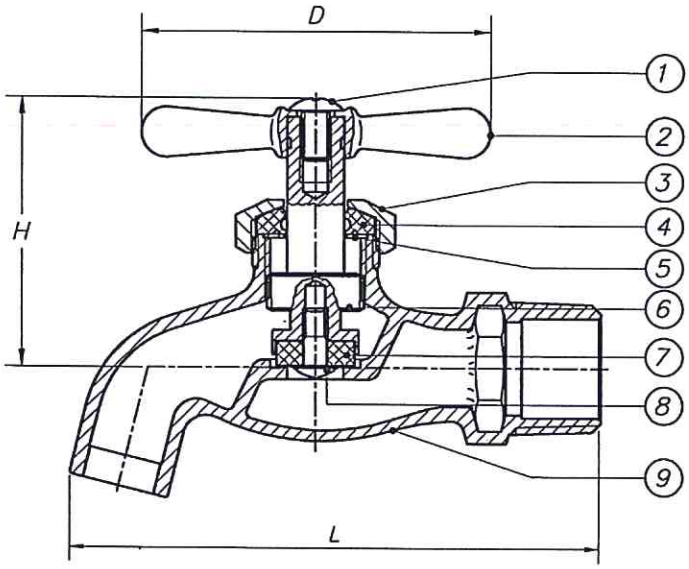

Dimensions

Size	D	H	L
1/2"	2.20	1.69	3.27
3/4"	2.20	1.69	3.33

Materials

No.	Part	Material
1	Handle Bolt	Steel
2	T-Handle	Zinc
3	Bonnet	No-Lead Brass
4	Gland Packing	Rubber
5	Washer	Stainless Steel
6	Stem	No-Lead Brass
7	Seat Packing	Rubber
8	Seat Screw	No-Lead Brass
9	Body	No-Lead Brass

SUBMITTAL INFORMATION

- 125 WOG
- Sizes: 1/2", 3/4"
- 1/2" is MNPT or SWT Combination

NO-LEAD: The weighted average of the wetted surface of this no-lead product contacted by consumable water contains less than one quarter of one percent (0.25%) lead.

EST. 1856 McDonald

A.Y. McDonald Mfg. Co.
P.O. Box 508
Dubuque, IA 52004-0508

Toll Free: 1-800-292-2737
Fax: 1-800-832-9296
Hours: 7:00 a.m. - 5:00 p.m., CST

sales@aymcdonald.com
www.aymcdonald.com

A.Y. McDonald considers the information on this assembly drawing correct when published. Item and option availability, including specifications, are subject to change without notice.

Submitted by:

SUBMITTAL DATA SHEET

NL Ball Style Corporation Stop – 74704B-3Q

MNPT x -3Q PEP Compression

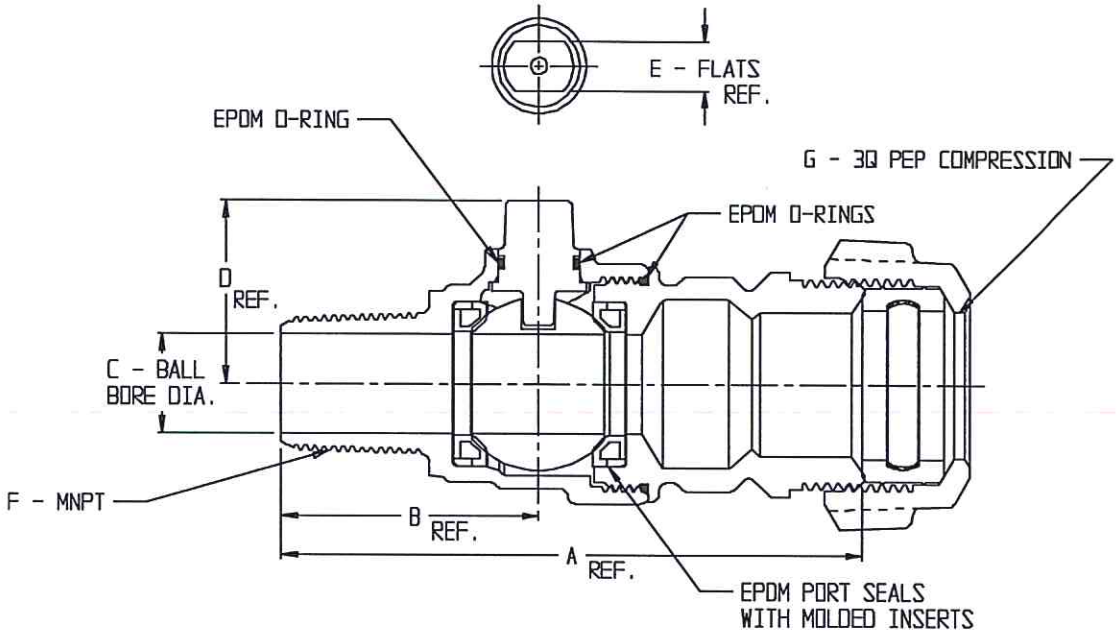

MODEL	SIZE	A	B	C	D	E	F	G
74704B-3Q	3/4	4.44	1.96	.75	1.39	.38	3/4	3/4
74704B-3Q	1	4.51	2.11	1.00	1.50	.28	1	1

SUBMITTAL INFORMATION

- Manufactured in compliance with ANSI/AWWA C800 (latest revision)
- Brass components in contact with potable water conform to ASTM B584, UNS C89833 (latest revision) and identified with "NL"
- Certified to NSF/ANSI 61 and NSF/ANSI 372
- Brass components not in contact with potable water conform to ASTM B62 and ASTM B584, UNS C83600 -85-5-5-5 (latest revision)
- PTFE coated brass ball rotates 360°
- Rated for 300 PSIG water pressure
- Blow out proof EPDM port seals
- End piece joint sealed with an EPDM o-ring and thread locker
- Made in the United States of America

A.Y. McDonald Mfg. Co.
P.O. Box 508
Dubuque, IA 52004-508

Toll Free: 1-800-292-2737
Fax: 1-800-832-9296
Hours: 7:00 a.m. – 5:00 p.m., CST

sales@aymcdonald.com
www.aymcdonald.com

A.Y. McDonald considers the information on this assembly drawing correct when published. Item and option availability, including specifications, are subject to change without notice.

Submitted by:

SUBMITTAL INFORMATION

Fabricated Steel Saddle- *(FS202-xxxx-Tap style)*

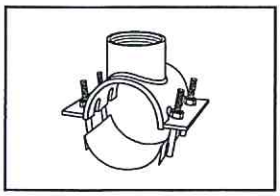

6" - 12" FABRICATED STEEL SADDLE WITH STAINLESS STEEL BAND (3" & 4" TAPS)

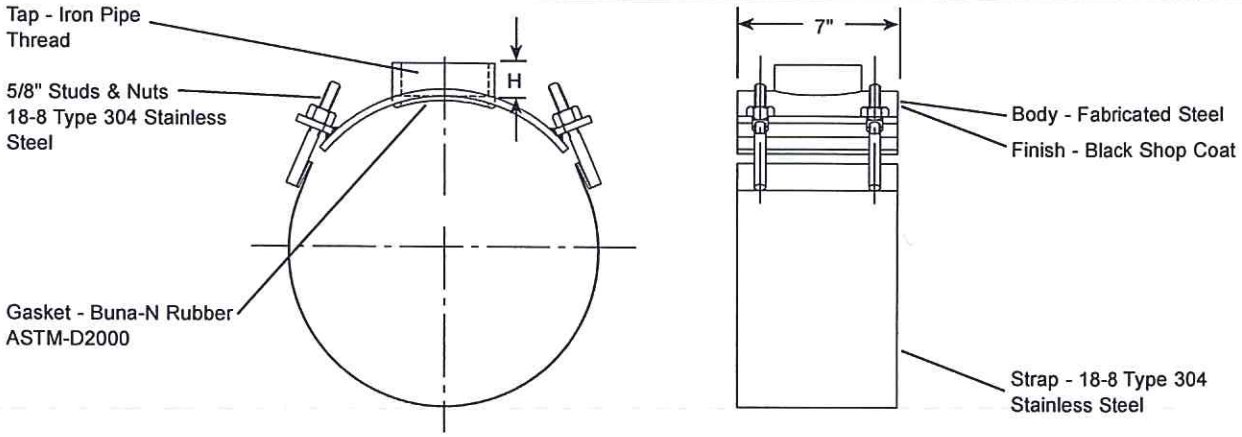

Nom. Pipe Size	Actual Pipe O.D.	Tap Size (Inches)	Boss Height H	Approx. Wt. Lbs.	Catalog Number	✓ Submitted Item(s)
6"	6.00	3	3-1/16"	15.7	FS202-600-IP9	
	6.00	4	3-5/16"	16.1	FS202-600-IP11	
	6.63	3	3-1/16"	16.0	FS202-663-IP9	
	6.63	4	3-5/16"	16.3	FS202-663-IP11	
	6.90	3	3-1/16"	16.4	FS202-690-IP9	
	6.90	4	3-5/16"	16.7	FS202-690-IP11	
8"	8.00	3	3-1/16"	16.6	FS202-800-IP9	
	8.40	4	3-5/16"	17.0	FS202-800-IP11	
	8.63	3	3-1/16"	16.9	FS202-863-IP9	
	8.63	4	3-5/16"	17.3	FS202-863-IP11	
	9.05	3	3-1/16"	17.2	FS202-905-IP9	
	9.05	4	3-5/16"	17.5	FS202-905-IP11	
10"	10.00	3	3-1/16"	18.0	FS202-1000-IP9	
	10.00	4	3-5/16"	19.1	FS202-1000-IP11	
	10.75	3	3-1/16"	18.4	FS202-1075-IP9	
	10.75	4	3-5/16"	19.5	FS202-1075-IP11	
	11.10	3	3-1/16"	18.8	FS202-1110-IP9	
	11.10	4	3-5/16"	19.7	FS202-1110-IP9	
12"	12.00	3	3-1/16"	20.0	FS202-1200-IP9	
	12.00	4	3-5/16"	21.0	FS202-1200-IP11	
	12.75	3	3-1/16"	20.5	FS202-1275-IP9	
	12.75	4	3-5/16"	21/1	FS202-1275-IP11	
	13.20	3	3-1/16"	20.8	FS202-1320-IP9	
	13.20	4	3-5/16"	22.1	FS202-1320-IP11	

FEATURES

- 150 PSI working pressure, dependent upon industry standard support and backfill practices.
- Boss tapped with iron pipe threads.

The Ford Meter Box Company considers the information in this submittal form to be correct at the time of publication. Item and option availability, including specifications, are subject to change without notice. Please verify that your product information is current.

The Ford Meter Box Company, Inc.
P.O. Box 443, Wabash, Indiana U.S.A. 46992-0443
Phone: 260-563-3171 / Fax: 800-826-3487
Overseas Fax: 260-563-0167
www.fordmeterbox.com

05/21/14

Submitted By:

Interstate

Interstate Plastic, Inc.
MANUFACTURERS OF PLASTIC PIPE

NSF-pw
Potable Water

NSF®

Interstate PE3408 High Density Polyethylene Pipe

Interstate PE3408 Pipe is manufactured from a high density, very high molecular weight polyethylene compound specifically designed for high hoop stress, outstanding stress crack resistance, and low temperature toughness.

Performance Features and Benefits

- Excellent chemical and corrosion resistance
- Outstanding stress crack resistance
- Lightweight and flexible
- Superior abrasion resistance
- NSF tested and certified for potable water
- High long term hydrostatic strength
- Tough and ductile

Interstate PE3408 pipe has outstanding physical properties. It does not rot; rust; pit or corrode through chemical or electrical reactions with the surrounding soil whether it is acidic, alkaline, wet or dry. It neither supports the growth of, nor is it affected by algae, bacteria, or fungus. It is also resistant to marine biological attack.

Protection against ultraviolet degradation during extended periods of outside storage and above ground service use is provided by the addition of carbon black and chemical thermal stabilizers.

Typical Applications for Interstate PE3408 Pipe

- Municipal water service lines
- Well piping
- Lawn sprinkler systems
- Swimming pools
- Livestock watering lines
- Potable water distribution lines
- Farm and ranch irrigation
- Fiber optic innerduct
- Industrial water distribution
- Oil patch lines
- Drilling supply lines
- Sewer lines
- Marine lines
- Process cooling lines
- Ground source heat pumps
- Electrical conduit

3375 E. Seltice Way • P.O. Box 398 • Post Falls, Idaho 83877 • (208) 773-4538 / (800) 776-7537
Fax (208) 773-9400 / (888) 206-3012

Interstate

Interstate Plastic, Inc.

MANUFACTURERS OF PLASTIC PIPE

NSF-pw
Potable Water

NSF®

ASTM D2239 (SIDR-PR) BASED ON CONTROLLED INSIDE DIAMETER
NSF APPROVED PE3408

SIDR-19, 80 PSI

Nominal Size (inches)	Pressure Rating (psi @ 73.4 F water)	Nominal Inside Diameter (inches)	Minimum Wall Thickness (inches)	Approx. Weight per 100 feet (pounds)	Standard Coiled Shipping Lengths (feet)
3/4"	80	0.824"	0.060"	7.2 lbs.	100 - 300
1"	80	1.049"	0.060"	9.1 lbs.	100 - 300
1¼"	80	1.380"	0.073"	15.2 lbs.	100 - 300
1½"	80	1.610"	0.085"	21.1 lbs.	100 - 300
2"	80	2.067"	0.109"	34.1 lbs.	100 - 300

SIDR-15, 100 PSI

3/4"	100	0.824"	0.060"	7.2 lbs.	100 - 300
1"	100	1.049"	0.070"	10.7 lbs.	100 - 300
1¼"	100	1.380"	0.092"	18.2 lbs.	100 - 300
1½"	100	1.610"	0.107"	24.9 lbs.	100 - 300
2"	100	2.067"	0.138"	41.1 lbs.	100 - 300

SIDR-11.5, 125 PSI

1/2"	125	0.622"	0.060"	5.5 lbs.	100 - 300
3/4"	125	0.824"	0.072"	8.6 lbs.	100 - 300
1"	125	1.049"	0.092"	14.0 lbs	100 - 300
1¼"	125	1.380"	0.120"	24.3 lbs	100 - 300
1½"	125	1.610"	0.140"	33.1 lbs	100 - 300
2"	125	2.067"	0.180"	54.5 lbs.	100 - 300

SIDR-9, 160 PSI

3/4"	160	0.824"	0.092"	11.4 lbs	100 - 300
1"	160	1.049"	0.117"	18.4 lbs.	100 - 300
1¼"	160	1.380"	0.153"	31.6 lbs.	100 - 300
1½"	160	1.610"	0.179"	43.2 lbs	100 - 300
2"	160	2.067"	0.230"	71.0 lbs.	100 - 300

SIDR-7, 200 PSI Water Service Line

3/4"	200	0.824"	0.118"	15.0 lbs	100 - 300
1"	200	1.049"	0.150"	24.3 lbs	100 - 300
1¼"	200	1.380"	0.197"	41.8 lbs	100 - 300
1½"	200	1.610"	0.230"	56.9 lbs	100 - 300
2"	200	2.067"	0.295"	93.8 lbs	100 - 300

Standard Coil Lengths: 100 - 300 foot coils
*All other coil lengths will be treated as special order items.

11-00

3375 E. Seltice Way • P.O. Box 398 • Post Falls, Idaho 83877 • (208) 773-4538 / (800) 776-7537
Fax (208) 773-9400 / (888) 206-3012

Polyethylene Plastic Pipe
ASTM D 2239 (SIDR-PR) Based on Controlled Inside Diameter

This specification covers polyethylene pipe made in standard thermoplastic pipe inside dimension ratios and pressure rated for water. Pipe manufactured under this specification is based on a controlled inside diameter. For a given nominal size, the inside diameter will be constant regardless of the pressure rating.

The most common ratios under this specification are SIDR-15, SIDR-11.5, SIDR-9, and SIDR-7. The lower the SIDR number, the thicker the wall and the higher the pressure rating. The definition of SIDR (Standard Inside Dimension Ratio) is the specific ratio of the average specified inside diameter to the minimum specified wall thickness. Figure 1 shows the difference between an SIDR-15 and an SIDR-7 cross section.

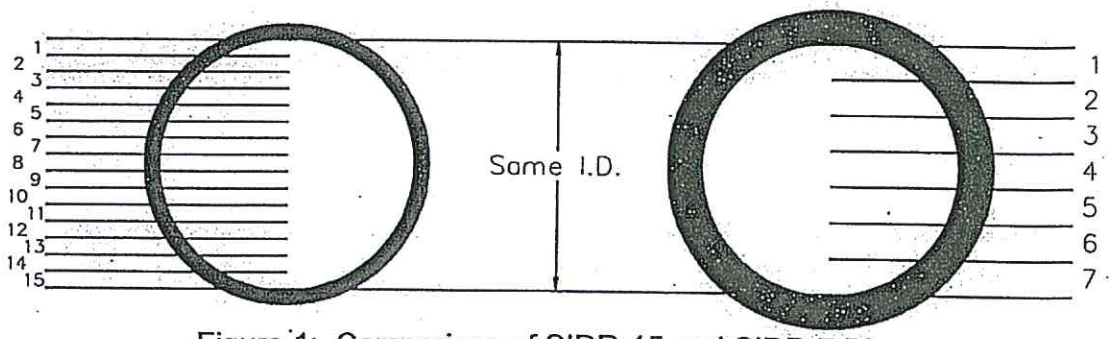

Figure 1: Comparison of SIDR-15 and SIDR-7 Pipe

This information is intended to provide general notes on our products and their uses. To the best of our knowledge, the information contained herein is accurate and reliable, but, because the many factors involved in the use of our products by others is beyond our control, Interstate Plastic, Inc. makes no guarantee, expressed or implied, and assumes no obligation or liability in the use of the herein contained data.

3375 E. Seltice Way • P.O. Box 398 • Post Falls, Idaho 83877 • (208) 773-4538 / (800) 776-7537
Fax (208) 773-9400 / (888) 206-3012

Interstate

Technical Information

ASTM D 3350 Standard Specifications for Polyethylene Plastics Pipe and Fittings Material

This specification covers the identification of polyethylene plastic pipe and fittings materials according to a cell classification system. In ASTM D 3350, polyethylene plastic pipe and fittings compounds are classified according to density, melt index, flexural modulus, tensile strength at yield, slow crack growth resistances, and the hydrostatic design basis at 73.4° F. The color and UV stabilization is indicated at the end of the cell classification by means of a letter designation.

The manner in which materials are identified in the cell classification is illustrated for a PE3408 pipe compound PE345464C as follows:

1. Density (0.941 to 0.955 g/cm³).....3
2. Melt Index (<0.15).....4
3. Flexural Modulus (110,000 to <160,000 psi.).....5
4. Tensile Strength at Yield (3,000 to <3,500 psi.).....4
5. Slow Crack Growth Resistance
   PENT (100 hours).....6
6. Hydrostatic Design Basis at 73.4°F (1,600 psi.).....4

   Color and UV Stabilizer-Black With 2% Minimum Carbon Black.....C

	Property	Test Method	0	1	2	3	4	5	6
1	Density, grams/cubic cm	D1505	-	0.910 to 0.925	0.926 to 0.940	0.941 to 0.955	>0.955	-	-
2	Melt Index	D1238	-	>1.0	1.0 to 0.4	<0.4 to 0.15	<0.15	Note A	Note B
3	Flexural Modulus, MPa (psi)	D790	-	<138 (<20,000)	138 to <278 (20,000 to <40,000)	2.78 to <552 (40,000 to <80,000)	552 to <758 (80,000 to 110, 000)	758 to <1103 (110,000 to <160,000)	>1103 (>160,000)
4	Tensile Strength at yield, MPa (psi)	D638	-	<15 (<2,200)	15 to <18 (2,200 to <2,600)	18 to <21 (2,600 to <3,000)	21 to <24 (3,000 to <3,500)	24 to <28 (3,500 to <4,000)	>28 (>4,000)
5	Slow Crack Growth Resistance		-						
	I. ESCR	D1693							
	a. Test Condition (100% Igepal.)			A	B	C	C		
	b. Test Duration, h			48	24	192	600		
	c. Failure, max, %			50	50	20	20		
	II. PENT (hours)	F1473							
	Molded plaque, 80°C, 2.4 MPa			0.1	1	3	10	30	100
6	Hydrostatic, design basis, MPa (psi), (23°C)	D2837	Not pressure rated	5.52 (800)	6.89 (1,000)	8.62 (1,250)	11.03 (1,600	-	-

Note A: Classify materials having a melt index less than 0.15 (cell 4) as cell 5 only if they have a flow rate not greater than 4.0 g/10 min. when tested in accordance with Test Method D 1238, Condition f.

Note B: Classify materials having a melt index less than 0.15 (cell 4) as cell 6 only if they have a flow rate not greater than 0.30 g/10 min when tested at 310°C and a total load (including piston) of 12,480 gf.

Table 9: Polyethylene Materials Cell Classification Limits

A	B	C	D	E
Natural	Colored	Black w/ 2% Minimum Black Carbon	Natural with UV Stabilizer	Colored with UV Stabilizer

Table 10: Polyethylene Materials Color & UV Stabilization Specifications

T mation is intended to provide general notes on our products and their uses. To the best of our knowledge, the information contained herein is accurate and reliable, but, because the many factors ir n the use of our products by others is beyond our control. Interstate Plastic, Inc. makes no guarantee, expressed or implied, and assumes no obligation or liability in the use of the herein contained data.

3375 E Seltice Way – PO Box 398 – Post Falls, Idaho 83877 – (208) 773-4538 / (800) 776-7537
Fax (208) 773-9400 / (888) 206-3012

3375 E. Seltice Way
PO Box 398
Post Falls, Idaho 83877

Interstate Plastic, Inc.

MANUFACTURERS OF PLASTIC PIPE

Telephone (208) 773-4538
Toll Free (800) 776-7537
Fax (208) 773-9400

CERTIFICATION LETTER
Manufactured in the USA

Interstate Plastic, Inc. manufactures polyethylene plastic pipe with the trade designation, INTERSTATE.

INTERSTATE meets all the specifications in NSF Standard 14 for dimensional compliance, burst pressure, and other characteristics. The material is tested to comply with ANSI/NSF Standard 61 health effects requirements.

INTERSTATE meets the specifications set down in ASTM D-2239, SIDR-PR (Based on Controlled Inside Diameter) NSF Approved. Pressure rated at 80 PSI, 100 PSI, 125 PSI, 160 PSI and 200 PSI. (Manufactured in Black, Black with Blue Skin, Black with Purple Skin in 160PSI and 200PSI to meet different applications)

INTERSTATE is produced to meet ASTM D 3035 IPS (Iron Pipe Size) DR-PR (Dimension Ratio-Pressure Rated Based on Controlled Outside Diameter) NSF Approved. Pressure rated at 160 PSI, 200 PSI and 267 PSI. (Manufactured in Black, Black with Blue Skin, Black with Purple Skin in 160PSI and 200PSI to meet different applications)

INTERSTATE is produced to meet ASTM-D 2737 SDR-9 Copper Tube size and NSF Approved. Pressure rated at 200 PSI. (Manufactured in Black, Black with Blue Skin, Black with Purple Skin to meet different applications)

INTERSTATE is produced to meet AWWA-C901 for ASTM-D 2239, ASTM D 2737 and ASTM D-3035 specifications.

All products are regularly tested for performance and health effects specified by the applicable ASTM, AWWA and CSA performance standards for the use in potable water systems.

In addition, INTERSTATE has met the specifications published by General Services Administration, known as the COMMERCIAL ITEM DESCRIPTION A-A-996A.

ASTM-D1248 Standard specification for polyethylene plastics molding and extrusion materials

ASTM D 3350 Standard specification for polyethylene plastics pipe and fitting material

Interstate Plastic, Inc.

Larry Nehlich
Production Manager

Interstate

NSF-pw
Potable Water

NSF®

Interstate PE 3408
200 psi Water Service Line Tubing
ASTM D 2737 Polyethylene (PE) Plastic Tubing
SDR-PR (Standard Dimension Ratio-Pressure Rated)
Based on Controlled Outside Diameter
NSF Approved NSF-pw

Standard Dimension Ratio SDR-9 Copper Tubing Size (CTS)

Nominal Size (inches)	Pressure Rating (psi @ 73.4 F water)	Nominal Outside Diameter (inches)	Approx. Inside Diameter (inches)	Approx. Wall Thickness (inches)	Approx. Weight per 100 feet (pounds)	Standard Coiled Shipping Lengths (feet)
3/4"	200	0.875"	0.671"	0.102"	10.3	100 - 300
1"	200	1.125"	0.865"	0.130"	16.9	100 - 300
1-1/4"	200	1.375"	1.060"	0.158"	25.0	100 - 300
1-1/2"	200	1.625"	1.250"	0.186"	34.8	100 - 300
2"	200	2.125"	1.640"	0.242"	59.4	100 - 300

Interstate PE3408
200 psi Water Service Line Pipe
ASTM D 2239 Polyethylene (PE) Plastic Pipe
SIDR-PR (Standard Inside Dimension Ratio-Pressure Rated)
NSF Approved NSF-pw

Standard Inside Dimension Ratio SIDR-7

Nominal Size (inches)	Pressure Rating (psi @ 73.4 F water)	Nominal Inside Diameter (inches)	Minimum Wall Thickness (inches)	Approx. Weight per 100 feet (pounds)	Standard Coiled Shipping Lengths (feet)
3/4	200	0.824"	0.118"	15.0 lbs.	100 - 300
1	200	1.049"	0.150"	24.3 lbs.	100 - 300
1 1/4	200	1.380"	0.197"	41.8 lbs.	100 - 300
1 1/2	200	1.610"	0.230"	56.9 lbs.	100 - 300
2	200	2.067"	0.295"	93.8 lbs.	100 - 300

Standard Coil Lengths: 100 - 300 foot coils
*All other coil lengths will be treated as special order items.

3/96

Interstate Plastic, Inc. • P.O. Box 398, Post Falls, Idaho 83854 • (208) 773-4538 • Fax (208) 773-9400

The Kennedy Guardian

Visit our website at www.kennedyvalve.com
KENNEDY VALVE

Fire hydrants have been used in fire protection for over 100 years. A.W.W.A. C502 was developed in 1913 as a standard for the manufacture and use of dry barrel hydrants. Kennedy has established itself as a leader in the industry with manufacturing experience dating back to 1905. Many of the early hydrants are in use today.
Kennedy's most recent design is the Guardian. Based on a simple design, it is easy to install, maintain and repair. The Guardian sets a standard for quality in the industry and meets or exceeds all requirements for A.W.W.A. C502 latest revision, and is UL listed and FM approved.

Guardian Features

K81D Meets or exceeds requirements of A.W.W.A. C-502 and is UL listed and FM approved.

K-81A Meets or exceeds requirements of A.W.W.A. C-502.

AWWA
500 psi test pressure
250 psi working pressure

ULFM
500 psi test pressure
***250 psi working pressure**

* As of 01-01-2011

Fig. K81D

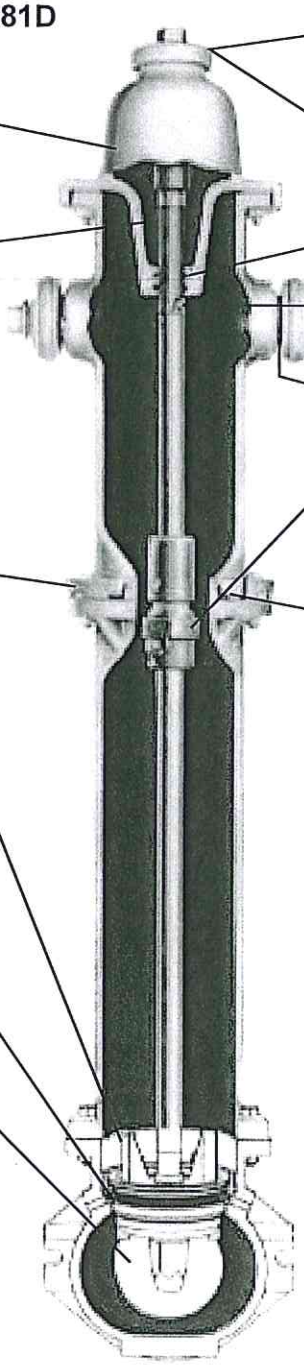

Weather Shield
To protect exposed operating area from freezing rain and dirt.

Thrust Washer
For easy turning operation.

One Piece Bonnet
Newly designed for easier maintenance.

Sealed Grease Cavity
For easier operation and maintenance.

Two O-Rings
To protect operating threads from corrosion.

O-Ring
To seal between brass ferrule and stem.

Nozzle
Tamper resistant.

Breakable Coupling
Minimizes damage from traffic accident.
New design makes repairs more efficient.

Traffic Flange
Full 360° adjustment.
New Breaking Ring on top for easy replacement and interchangeability on all K-81 models.

O-Ring
For ease of repair and nozzle facing.

Corrosion Resistant
Bronze Drain Valve.

Bronze to Bronze Seating
This standard feature assures easy seat removal.

Full Cover Bottom Plate
Prevents corrosion to the lower stem threads and prevents main valve distortion. Provides a positive stop against the elbow.

Easy to install—Even easier to maintain

- **Tamper resistant** quarter turn hose and steamer nozzles. For those who know how, replacement is easy.
- **Easy to use**, short, simple, inexpensive and lightweight seat removal wrench.
- **Unique pressure-activated** drain valve assures positive shut off. The higher the pressure, the tighter the seal. Automatically compensates for wear due to usage. Does not rely on interference fit.
- **Two sizes available**, 5¼" valve opening and 4½" valve opening to best meet your needs.
- **Fully and easily lubricated** operating threads for corrosion protection and ease of operation.
- **The Guardian K-81D Hydrant** meets or exceeds all the latest provisions of AWWA C 502, UL 246 and FM 1510 specifications (options may be limited on UL/FM models)

* Hydrant Bonnet to be Red in color *

Guardian K81D Technical/Dimensional Data (AWWA-UL/FM)

TURNS TO OPEN = 15 1/2

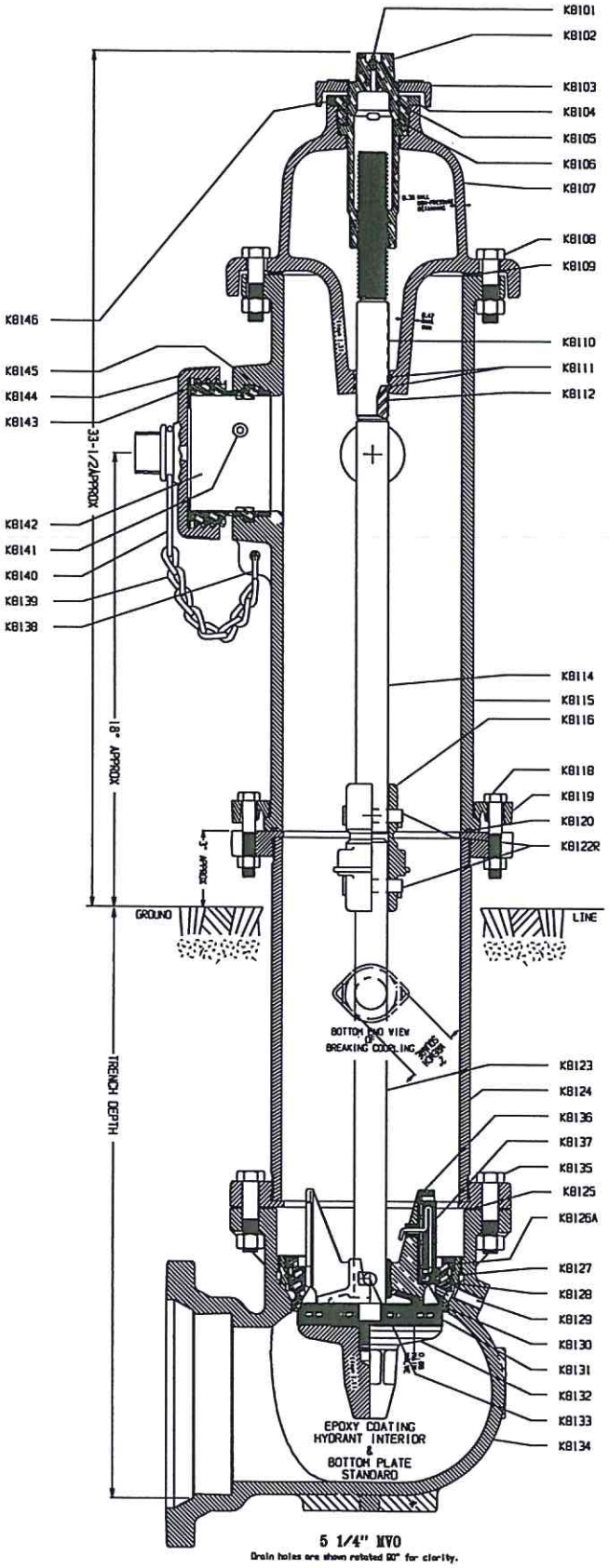

Figure K81D

PARTS LIST

	DETAIL	PART	MATERIAL	ASTM SPEC (or as stated)
	K8101	ALEMITE FITTING	STAINLESS STEEL	A276 (304)
†	K8102	OPERATING STEM NUT	BRONZE	B584 CB4400/AWWA GR A
	K8103	DIRT SHIELD	CAST IRON	A126 CLASS B
	K8104	STEM LOCK NUT	BRONZE	B584 CB4400/AWWA GR A
†	K8105	O-RING	VITON	D2000
†	K8106	THRUST WASHER	NYLATRON GS	MIL LP-410
	K8107	HYDRANT CAP	CAST IRON	A126 CLASS B
	K8108	CAP BOLTS & NUTS	STEEL (ZINC PLATED)	A 307/SAE GR 2
†	K8109	CAP GASKET	CLOTH INSERTED RUBBER	D2000
*	K8110	STEM FERRULE	NAVAL BRASS	B21-CDA 464
†	K8111	O-RING	BUNA-N (SYN. RUBBER)	D2000
*	K8112	O-RING	BUNA-N (SYN. RUBBER)	D2000
	K8114	UPPER STEM	C.R. STEEL	A108
	K8115	UPPER BARREL	CAST IRON	A126 CLASS B
	K8116	STEM BREAKING COUPLING	CAST IRON	A126 CLASS B
	K8118	BOLTS & NUTS	STEEL (ZINC PLATED)	A 307/SAE GR 2
	K8119	BREAKING RING	CAST IRON	A126 CLASS B
	K8120	O-RING	BUNA-N (SYN. RUBBER)	D2000
	K8122R	COUPLING PINS	STAINLESS STEEL	18-8
	K8123	LOWER STEM	C.R. STEEL	A108
	K8124	LOWER BARREL	DUCTILE IRON (C.I on request)	ANSI 21.50. 21.51
†	K8125	ELBOW GASKET	CELLULOSE FIBER	FED F339477M4
†	K8126A	O-RING	BUNA-N (SYN. RUBBER)	D2000
*	K8127	SEAT RING INSERT	BRONZE	B584 CB4400/AWWA GR A
†	K8128	SEAT RING	BRONZE	B584 CB4400/AWWA GR A
	K8129	DRAIN TUBE	NAVAL BRASS	B21-CDA 464
†	K8130	O-RING	BUNA-N (SYN. RUBBER)	D2000
†	K8131	MAIN VALVE	EPDM W/STEEL INSERT	D2000
	K8132	BOTTOM PLATE	CAST IRON	A126 CLASS B
	K8133	DRAIN VALVE PIN	STEEL-302/304 STAINLESS	A276 (304)
	K8134	ELBOW	DUTILE IRON	A536 GRADE 70-50-5
	K8135	ELBOW BOLTS AND NUTS	STEEL-302/304 STAINLESS	ASTM F593-304
	K8136	DRAIN VALVE	BRONZE	B584 CB4400/AWWA GR A
†	K8137	DRAIN VALVE FACING W/INSERT	BUNA-N W/STAINLESS STEEL	D2000/A276 (304)
	K8138	NOZZLE CHAIN 'S' HOOK	STEEL	A108
	K8139	NOZZLE CAP CHAIN	STEEL	A108
	K8140	NOZZLE CHAIN BAND	STEEL	A108
†	K8141	NOZZLE RETAINING SCREW	STAINLESS STEEL	A276 (304)
#	K8142	NOZZLE	BRONZE	B584 C83600
†#	K8143	NOZZLE CAP GASKET	RUBBER	D2000 TYPE AA
#	K8144	NOZZLE CAP	CAST IRON	A126 CLASS B
†#	K8145	O-RING	BUNA-N (SYN. RUBBER)	D2000
	K8146	ALLEN HEAD SET SCREW	STAINLESS STEEL	A276 (410)
	K8147	SEAT REMOVAL WRENCH		
	K8148	NOZZLE REMOVAL TOOLS		
†	K8149	COLLISION REPAIR KIT		
	K8150	GRADE EXTENSION KIT		

* Denotes that part is available only as part of an assembly.
\# Must specify type of Nozzle, Hose or Steamer.
† Recommended spare parts.

Accessories

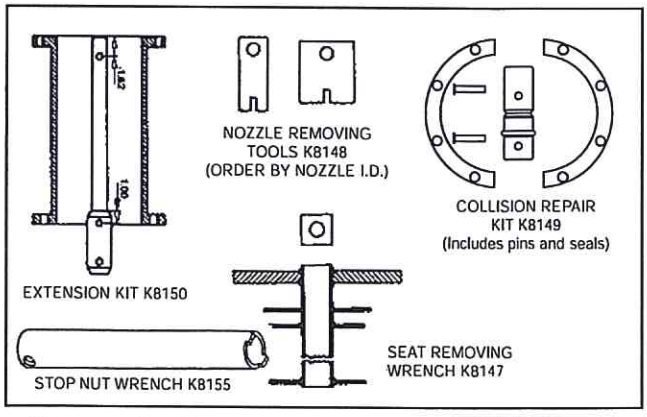

Style	Shoe Size	A
M.J.	4	7 3/4
M.J.	6	8
Flange	4	7 7/8
Flange	6	8 1/8
Tyton	6	9

Tyton ends available only in 5 1/4" Main Valve Hydrants.
4" shoe dimensions apply to 4 1/2" Main Valve Hydrants only.

MARKINGS	
FRONT	BACK
YEAR	SIZE
KENNEDY	K.V. MONOGRAM
U.S.A.	KENNEDY
UL / FM	ELMIRA, NY
TYPE	AWWA
	250 CWP

Contact Factory for UL/FM Limitations

JCM INDUSTRIES
P. O. Box 1220, Nash, TX 75569-1220
Phone 800-527-8482 or 903-832-2581
Fax 800-874-9524 or 903-838-6260
www.jcmindustries.com

Typical Specification

JCM Ductile Iron Couplings

Couplings for pipe sizes 2" - 12" shall be of ductile iron construction. Couplings shall be of the wide range type to fit Steel, Cast Iron, Ductile Iron, PVC, HDPE and Asbestos-Cement with only a change of gaskets. Coupling sleeves shall be 5" in length on 2" - 2-1/2" nominal sizes, 6" in length on nominal sizes 3" - 12". Ductile Iron couplings shall be JCM 210, 211, 212, or approved equal.

JCM 200 Series Ductile Couplings are ANSI/NSF Standard 61 and Standard 61 Annex G Certified. JCM 200 Series Couplings meet or exceed the ANSI/AWWA C-219 Standard as applicable.

JCM 210/211/212 Series Ductile Iron Coupling

Nominal Pipe Size (IN)	Sleeve Length (IN)	Number of Bolts
2	5	2
2-1/2	5	2
3	6	3
4	6	4
6	6	5
8	6	6
10	6	7
12	6	8

Note: For applications with High Density Polyethylene Pipe, refer to the JCM HDPE Fittings Manual or contact JCM Industries.

This typical specification, provided by JCM Industries, is a proposed guideline for use by specifying agencies to ensure significant design and material features of this product are included within the agencies' individual specifications.

NSF Certified to NSF/ANSI 61

Effective 02.07.11

JCM INDUSTRIES
P. O. Box 1220, Nash, TX 75569-1220
Phone 800-527-8482 or 903-832-2581
Fax 800-874-9524 or 903-838-6260
www.jcmindustries.com

Material Specification

JCM 200 Series Ductile Iron Couplings - 210, 211, 212

Sleeve & Flanges: Ductile Iron Per ASTM A536 65-45-12

Gaskets: Styrene-Butadiene Rubber (SBR) has good physical properties. Compounded for use with water, salt solutions, mild acids and bases; has excellent abrasion resistance. Per ASTM D-2000. Standard temperature range from -40° to 150°F (-40° to 65° C) constant, maximum intermittent 180° F (82 ° C). For applications on high temperatures or chemical pipelines, contact JCM Industries Technical Services. The material is not recommended for use on oil, ozone or weather resistant applications.

Bolts: 5/8" Corrosion resistant, high strength low alloy oval neck track head bolts per ASTM A242/ANSI 21.11/AWWA C111 and heavy hex nuts per A563 or equal.
Optional Hardware: Stainless Steel 18-8 Type 304 or 316
Epoxy Coated Alloy Hardware, Powercron 590-534 black cationic electrocoat.

Coating: Corrosion resistant shop coat paint primer. Optional fusion applied epoxy coating per ANSI/AWWA C-213. Other coatings available upon request.

Working Pressure: Fittings are rated for 150 PSI working pressure when installed per manufacturer's instructions. Inspection of pipe integrity is the responsibility of the end user. For higher working pressure applications, contact JCM Industries.

JCM 200 Series Ductile Couplings are ANSI/NSF Standard 61 and Standard 61 Annex G Certified.
JCM 200 Series Couplings meet or exceed the ANSI/AWWA C-219 Standard as applicable.

NSF Certified to NSF/ANSI 61

Effective 02.07.11

Hymax® Couplings

Nominal Diameter ND	Part No.	Overall Range	Low range Before removal the inner layer	High range After removal the inner layer	"L" Overall Length	"D" Overall Width	"i" Coupling Middle Ring	"G" Max. Gap Between Pipes	Approx. Weight
inch		inch	inch	inch	inch	inch	inch	inch	(lb)
1.5"	2000-0213-260	1.61-2.13	1.61-1.97 1.5" CTS, 1.5" PVC, 1.5" IPS	1.96-2.13 2" CTS	5.9	4	3.9	3.35	5
2"	2000-0303-260	2.10-3.03	2.10-2.60 2" CTS, 2" IPS	2.56-3.03 2.5" CTS, 2.5" IPS, 2.5" DR21	6.7	5.24	3.9	3.35	6
3"	2000-0433-260	3.46-4.33	3.46-3.90 3" PE(SCLAIR), 3" IPS	3.86-4.33 3" Pit Cast, 3" AC/100-200, 4" CTS	8.7	6.69	5.9	5.50	9
4"	2000-0563-260	4.25-5.63	4.25-5.00 4" IPS 4" Ductile, 4" Pit Cast, 4" AC/100,150	4.92-5.63 4" AC/200, 4" Clay	8.7	7.87	5.9	5.50	15
5"	2000-0638-260	5.12-6.38	5.12-5.75 4" AC/100, 150, 200RB, 5" IPS, PVC	5.71-6.38 6" OD Steel, 6" CTS	10.8	9.45	8.0	5.50	17
6"	2000-0768-260	6.42-7.68	6.42-7.05 6" IPS, 6" PE(SCLAIR), 6" Ductile	7.01-7.68 6" AC/100,150,200, 6" Clay	10.8	10.75	8.0	7.50	23
7"	2000-0874-260	7.48-8.74	7.48-8.11 6" AC/200RB, 7" IPS, 8" OD Steel	8.07-8.74 8" IPS, PVC	10.8	11.73	8.0	7.50	26
8"	2000-0984-260	8.54-9.84	8.54-9.17 8" IPS, 8" PE(SCLAIR), 8" Ductile	9.13-9.84 8" AC/100,150,200, 8" Clay	10.8	12.91	8.0	7.50	33
10"	2000-1200-260	10.70-12.00	10.70-11.37 10" IPS, 10" PE(SCLAIR), 10" Ductile	11.33-12.00 10" AC/100	10.8	15.04	8.0	7.50	33
10" o.s	2000-1226-260	10.96-12.26	10.96-11.63 10" Ductile, 10" AC/100, 150	11.59-12.26 10" AC/200, 10" Clay	10.8	15.28	8.0	7.50	39
12"	2000-1366-260	12.40-13.66	12.40-13.03 12" IPS, 12" PE(SCLAIR)	12.99-13.66 12" Ductile, 12" Pit Cast	10.8	16.61	8.0	7.50	39
12" o.s	2000-1441-260	13.15-14.41	13.15-13.78 12" Ductile	13.74-14.41 12" AC/100,150,200, 12" Clay	10.8	17.32	8.0	7.50	39

NOTE: For specific information, dimensions, or special applications on the Hymax 2000 Series, consult Total Piping Solutions, Inc.
NOTE: To extend product life in corrosive environments poly-wrapping and/or cathodic protection of the coupling is recommended.
*Hymax is a patented product developed by Krausz Industries, Ltd. The Hymax Trademark is the property of Krausz Industries Ltd.

Krausz

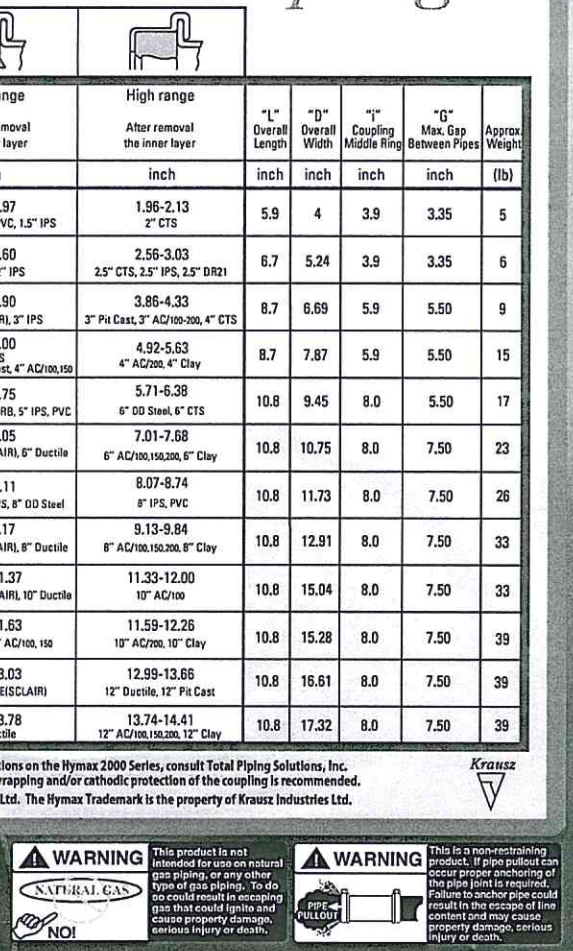

TPS Total Piping Solutions, Inc.
1760 Haskell Road, Olean, New York 14760.
Tel: 716-372-0160, Fax: 716-372-1767.
E-mail: sales@tps.us
Visit Our Website at: http://tps.us

Form #: 2000-09/06

Hymax® Couplings

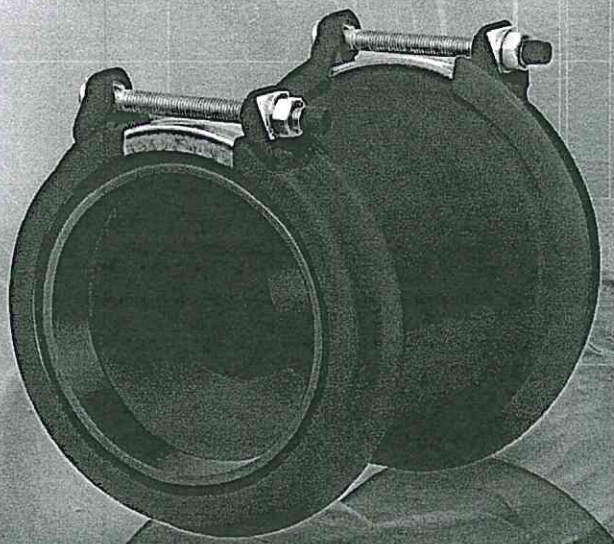

TPS Total Piping Solutions, Inc.

Hymax®-2000 Series Pipe Repair Couplings and Reducers

SI ISO 9001 Quality Assured Firm

...The Proven Time-Savers

* For Water and Sewerage Applications, above and below ground
* Inventory Reduction
* Joins Pipe with Diameter Differences of up to 1.30 inches
* Superior Two Stage Sealing Capabilities
* Easy Fitting...two bolts total, one to tighten per end
* Lightweight...can be handled by one person
* High Deflection-8 degrees
* Stab type installation (no disassembly required)
* Standard long body to allow for more pipe end gap
* 260 PSIG Working Pressure
* Meets and Exceeds "AWWA C-219 Standards"
* NSF-61 approved

Hymax coupling

Hymax reducer

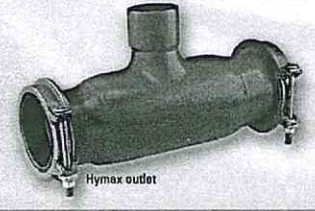

Hymax outlet

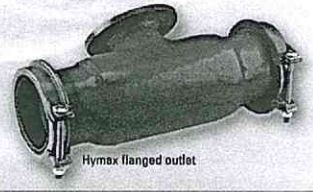

Hymax flanged outlet

*The Hymax 2000 coupling line is suited to a **wide range** of pipe joining conditions, and each size will replace between three and four modular type couplings in your inventory.*

*Each coupling will join pipes with **diameter differences up to 1.30 inches.** Reducers (Hymax 2200 Series) can handle pipe diameter differences of up to 2 inches in nominal diameter. In addition, the Hymax 2000 coupling can handle **pipe end gaps up to 7.5 inches,** and will accommodate **angular deflection of up to 8 degrees.***

*The Hymax 2000 offers an efficient range adjustable pressure assisted **Hydraulic Sealing system,** and **NSF 61 Registered EPDM Compounded gaskets.** Temperature range is -20°F to 220°F.*

*The Hymax 2000 is a **stab type** coupling requiring **no disassembly.** The installer simply adjusts the gasket, and tightens **one bolt on each end** of the coupling to the required torque. All work is performed from the topside of the coupling, eliminating the need for extra excavation and under-dig for the wrench.*

*The Hymax 2000 can be easily handled by one person due to the durable nature of its superior **lightweight** materials of construction. The coupling is equipped with a corrosion resistant coating of **fusion-bonded epoxy,** and comes with **stainless steel spanner, nuts and bolts.***

Longer Body Lengths and Reducers Available

The 2-layered gasket provides a built-in wide range.

1. The low range is provided by the 2-layered gasket.
2. Removing the inner layer enables the high range.

Each side self-seals

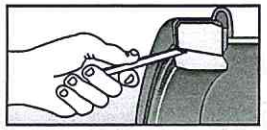

Hymax 2000 Series Specification

Materials:
Carbon Steel with NSF-61 Registered Fusion-bonded Epoxy Coating Approx.14 mils

Bolts and Nuts:
(ANSI 304/303) Stainless Steel with No-Gall Zinc Cobalt Coating.

Pressure Assisted Gasket:
NSF 61 Registered EPDM gasket. Compound approved for contact with drinking water and sewerage. The gasket is made in two layers, with a removable inner layer that allows for pipe diameter range expansion.

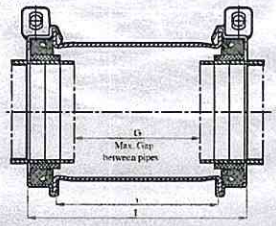

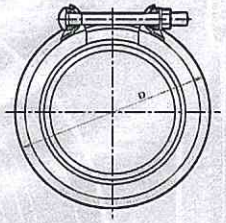

ECLIPSE NO. #88 SAMPLING STATION

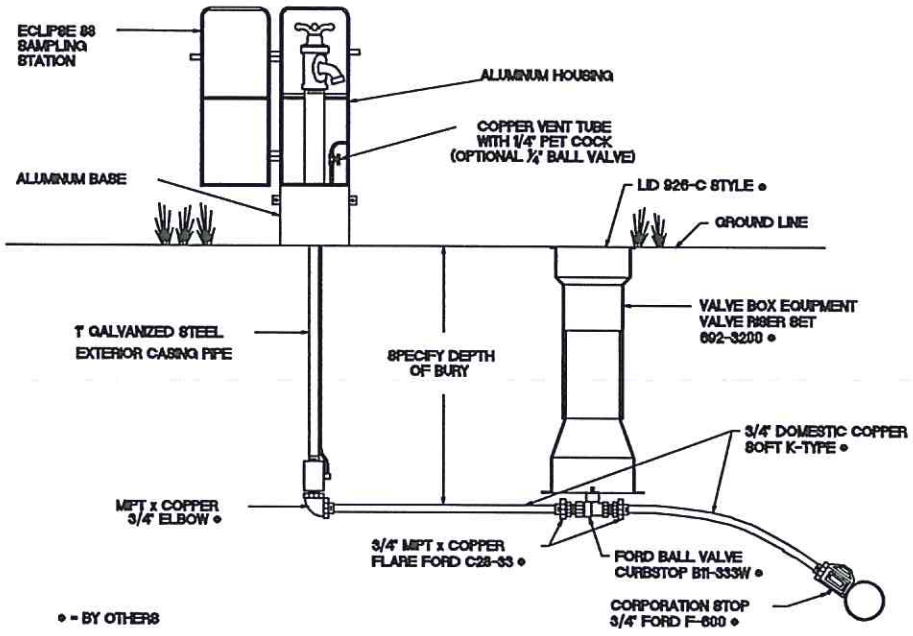

Sampling Stations shall be ' bury, with a 3/4" FIP inlet, and a (3/4" hose or unthreaded) nozzle.

All stations shall be enclosed in a lockable, nonremovable, aluminum-cast housing.

When opened, the station shall require no key for operation, and the water will flow in an all brass waterway.

All working parts will also be of brass and be removable from above ground with no digging. Exterior piping shall be brass or galvanized.

A copper vent tube will enable each station to be pumped free of standing water to prevent freezing and to minimize bacteria growth.

Eclipse No. #88 Sampling Station shall be manufactured by Kupferle Foundry, St. Louis, MO 63102.

DRAWN	F.M.
APPROVED	
DATE	11-07-12
MAT'L	

THIS DRAWING IS THE PROPERTY OF THE KUPFERLE FOUNDRY COMPANY. IT IS NOT TO BE USED OR DUPLICATED WITHOUT PERMISSION OF THE OWNER.

DATE	REVISION

PART NO. #88 SAMPLING STATION | SHEET 1 OF 1

ECLIPSE Since 1857
KUPFERLE FOUNDRY COMPANY
2511 NORTH 9TH STREET, ST. LOUIS, MO 63102
314-231-8738 800-231-3990 FAX 314-231-2820
http:/www.hydrants.com

XSEL™ Process Gauge - Stainless Steel
Type 232.34 - Dry Case
Type 233.34 - Liquid-filled Case

Applications

- For applications with high dynamic pressure pulsations or vibration a liquid filled case and socket restrictor are available
- Suitable for corrosive environments and gaseous or liquid media that will not obstruct the pressure system
- Process industry: chemical/petrochemical, power stations, mining, on and offshore, environmental technology, mechanical engineering and plant construction

Special features

- Excellent load-cycle stability and shock resistance
- Solid front thermoplastic case
- Positive pressure ranges to 30,000 psi
- XSEL™ Process Gauge with 5 year warranty on gauge and 10 year warranty on pressure system (see terms and condition
- All lower mount connection gauges are factory prepared for liquid filling

(LBM: must install membrane prior to field filling)

Bourdon Tube Pressure Gauge Model 232.34

Standard Features

Design
ASME B40.100

Sizes
4½" & 6" (115 & 160 mm) dial size

Accuracy class
± 0.5% of span (ASME B40.100 Grade 2A)
± 1.0% of span (ASME B40.100 Grade 1A)
(for 20,000 psi range and above)

Ranges
Vacuum / Compound to 200 psi
Pressure from 15 psi to 30,000 psi
or other equivalent units of pressure or vacuum

Working pressure

Steady:	full scale value
Fluctuating:	0.9 x full scale value
Short time:	1.5 x full scale value

Operating temperature
Ambient: -40°F to +150°F (-40°C to +66°C) - dry
-4°F to +150°F (-20°C to +66°C) - glycerine filled
-40°F to +150°F (-40°C to +66°C) - silicone filled
Medium: max. +212°F (+100°C) (See Note 1 on reverse)

Temperature error
Additional error when temperature changes from reference temperature of 68°F (20°C) ±0.4% for every 18°F (10°C) rising or falling. Percentage of span.

Weather protection
Weather resistant (NEMA 3 / IP54) - without membrane
Weather tight (NEMA 4X / IP65) - dry case or filled case with membrane installed

Pressure connection
Material: 316L stainless steel
Lower mount (LM) or lower back mount (LBM)
1/4" or 1/2" NPT with M4 internal tap

Restrictor
Material: Stainless steel (0.6 mm)

Bourdon tube
Material: 316L stainless steel
≤ 1,000 PSI: C-type
≥ 1,500 PSI: helical type

Movement
Stainless steel. Internal stop pin at 1.3 x full scale
Overload and underload stops - standard
Dampened movement - optional

Dial
White aluminum with black lettering, stop pin at 6 o'clock

Pointer
Black aluminum, adjustable

Case
Black fiberglass-reinforced thermoplastic (POCAN)
Solid front, blowout back
Turret-style case with built in rear flange lugs

WIKA®
Part of your business

Window
Clear acrylic with Buna-N gasket

Case filling
Glycerine 99.7% - Type 233.34

Optional extras

- Silicone dampened movement
- Panel mounting adaptor kit (field assembled)
- Silicone case filling
- Halocarbon case filling
- Cleaned for oxygen service
- Instrument glass or safety glass window
- Drag pointer (maximum reading indicator)
- Alarm contacts switches (magnetic or inductive)
- Special process connections
- Custom dial layout
- External zero adjustment (4.5" size only)

Note 1: The maximum continuous media temperature for this gauge is 212°F. However, higher temperatures can be maintained safely for short term exposure per table to the right. The user should consider temperature error and gauge component degradation when exposing gauge to any media or ambient temperature above 212°F. For continuous use in either ambient or media temperatures above 212°F, a diaphragm seal or other heat dissipating means is recommended. Consult factory for technical inquiries and application assistance.

Short term, intermittent maximum media temperature limits
(Optional glass window required for all these temperatures)

500°F (260 °C) -	Dry Gauge
250°F (130°C) -	Liquid filled gauge
300°F (150°C) -	Dampened movement gauge

Dimensions

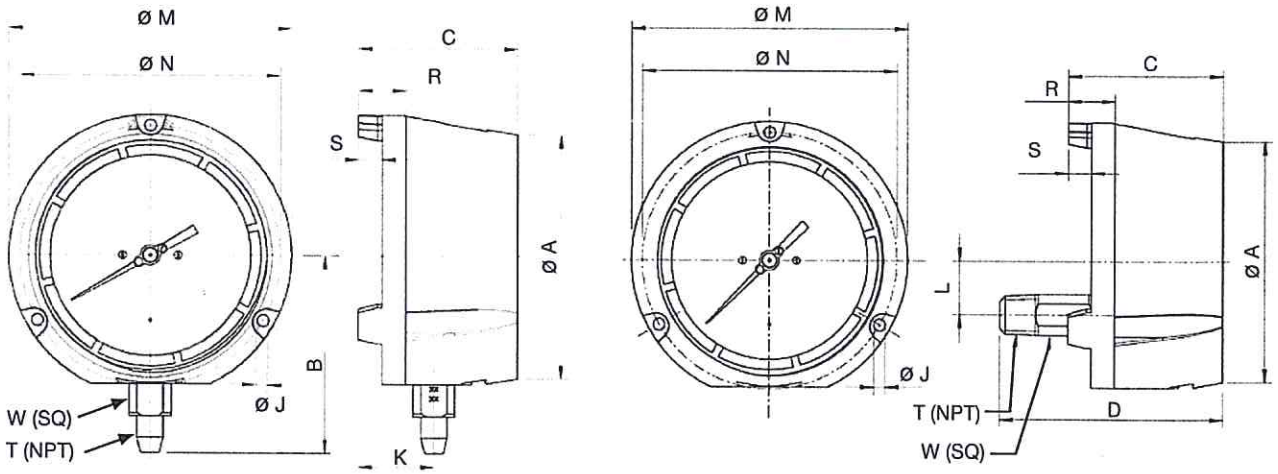

Size		A	B	C	D	J	K	L	M	N	R	S	T	W	Weight[1]	
4.5"	mm	128	103	84	120.3	6.3	40	28.5	148	136.5	25	12.5		22	2 lb.	dry
	in	5	4.06	3.31	4.74	0.248	1.57	1.12	5.83	5.37	0.99	0.49	1/2"	0.87	3 lb.	filled
6"	mm	164	122.5	88	123.4	7.1	40.2	28.5	190	177.8	25.4	12.7		22	3 lb.	dry
	in	6.46	4.82	3.46	4.86	0.28	1.58	1.12	7.5	7	1	0.5	1/2"	0.87	4 lb.	filled

[1] Weight without optional accessories

WIKA Datasheet 23X.34 06/2010

Ordering information
Pressure gauge model / Nominal size / Scale range / Size of connection / Optional extras required
Specifications and dimensions given in this leaflet represent the state of engineering at the time of printing.
Modifications may take place and materials specified may be replaced by others without prior notice.

WIKA Instrument Corporation
1000 Wiegand Boulevard
Lawrenceville, GA 30043
Tel (770) 513-8200 Toll-free 1-888-WIKA-USA
Fax (770) 338-5118
E-Mail info@wika.com
www.wika.com

EBAA IRON INC
Your Connection to the Future™

MEGALUG®
Series 1100

Mechanical Joint Restraint for Ductile Iron Pipe

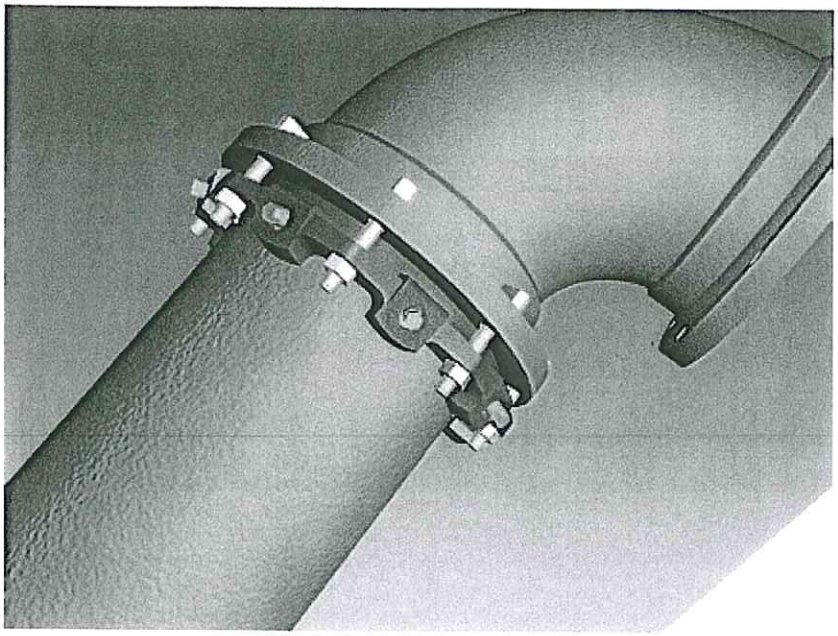

Nominal Pipe Size	Series Number	Shipping Weights	Post Assembly Deflection	Pressure Rating (PSI)
3	1103	6.1	3°	350
4	1104	7.7	3°	350
6	1106	11.9	3°	350
8	1108	14.8	3°	350
10	1110	23.9	3°	350
12	1112	31.2	3°	350
14	1114	48.5	2°	350
16	1116	56.4	2°	350
18	1118	63.1	1½°	250
20	1120	72.3	1½°	250
24	1124	133.1	1½°	250
30	1130	194.6	1°	250
36	1136	234.0	1°	250
42	1142	536.0	1°	250
48	1148	653.0	1°	250

NOTE: For applications or pressures other than those shown please contact EBAA for assistance.

Features and Applications:

- Sizes 3 inch through 48 inch
- Constructed of ASTM A536 Ductile Iron
- Torque Limiting Twist-Off Nuts
- MEGA-BOND®
  Restraint Coating System
  For more information on MEGA-BOND, refer to www.ebaa.com
- The Mechanical Joint Follower Gland is incorporated into the restraint
- Heavy Duty thick wall design
- Support Products Available:
  Split repair style available 3 inch through 48 inch.
  EBAA Series 1100SD

  Solid restraint harness available for push-on pipe bells.
  EBAA Series 1700

  Split restraint harness available for existing push-on bells.
  EBAA Series 1100HD
- All MEGALUG and related restraint products can be furnished as packaged accessories complete with appropriate restraint, gasket, lubrication, and bolting hardware
- For use on water or wastewater pipelines subject to hydrostatic pressure and tested in accordance with either AWWA C600 or ASTM D2774

Made In The USA

U.S. Patent Nos.
4092036, 4627774, 4779900, 4896903, 5544922

Copyright © 2007, EBAA Iron, Inc. All Rights Reserved

Series 2100

MEGAFLANGE®
Restrained Flange Adapter
U.S. Patent Nos. 4627774 and 5071175

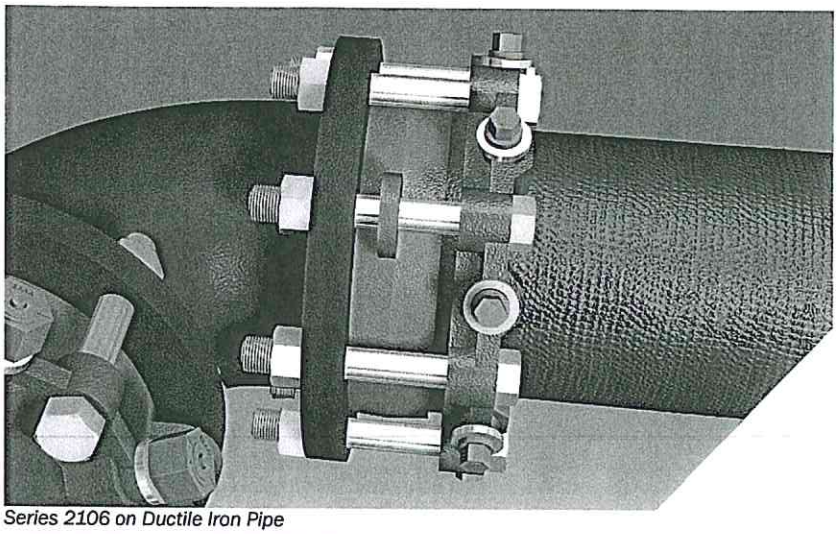

Series 2106 on Ductile Iron Pipe

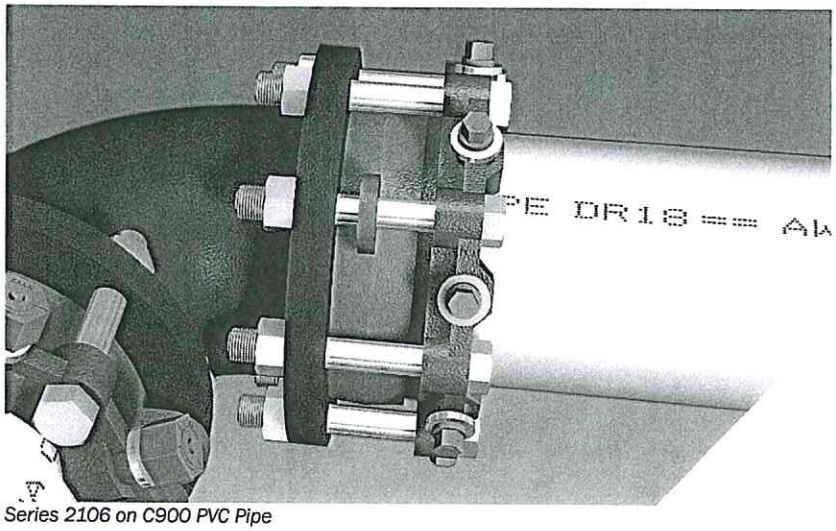

Series 2106 on C900 PVC Pipe

Features and Applications:

- MEGAFLANGE adapts and restrains plain end Ductile Iron, PVC, Steel and HDPE pipe to flanged pipe or fittings, where the flange conforms to ANSI/AWWA C111/A21.11 with flange surface facing in accordance with ANSI/AWWA C207 of the latest revision.
- Meets ANSI B16.5 Class 150/125 drilling pattern.
- Not for use on plain end fittings.
- MEGA-BOND® Restraint Coating System
- For more information regarding MEGA-BOND, refer to our web site @ www.ebaa.com
- Minimum 2 to 1 Safety Factor
- Fully Restrained
- Constructed of ASTM A536 Ductile Iron
- UL listed on sizes 3 inch through 12 inch
- FM approved on sizes 4 inch through 12 inch on C900 Class 150 and Class 200 PVC Pipe
- Pipe can be cut to length in the field
- Joint deflection up to 5°
- Easy dismantling allows fast removal of valves, meters or fittings for replacement or repair

For use on water or wastewater pipelines subject to hydrostatic pressure and tested in accordance with either AWWA C600, C605 or ASTM D2774.

Sample Specification

Restrained flange adapters shall be used in lieu of threaded or welded flanged spool pieces. Flanged adapters shall be made of ductile iron conforming to ASTM A536 and have flange bolt circles that are compatible with ANSI/AWWA C110/A21.10 (125#/Class 150 Bolt Pattern).

Restraint for flange adapter shall consist of a plurality of individual actuated gripping wedges to maximize restraint capability. Torque limiting actuating screws shall be used to insure proper initial set of gripping wedges.

The flange adapters shall be capable of deflection during assembly or permit lengths of pipe to be field cut to allow a minimum 0.6 inch gap between the end of the pipe and the mating flange without affecting the integrity of the seal.

All internal surfaces of the gasket ring (wetted parts) shall be lined with a minimum of 15 mils of fusion bonded epoxy conforming to the applicable requirements of ANSI/AWWA C213. Sealing gaskets shall be constructed of EPDM. The coating and gaskets shall meet ANSI/NSF-61. Exterior surfaces of the gasket ring shall be coated with a minimum of 6 mils of fusion bonded epoxy conforming to the applicable requirements of ANSI/AWWA C116/A21.16.

Restraint Ring coated with MEGA-BOND® Restaint Coating System More Inforamtion regarding MEGA-BOND can be found at www.ebaa.com.

Pressure ratings shall be a minimum of those shown in the table within current brochure.

The flange adapter shall be the Series 2100 MEGAFLANGE® Restrained Flange Adapter as produced by EBAA Iron, Inc. or approved equal.

Copyright 2013 © EBAA Iron, Inc.

Series 2100 Submittal Reference Drawing

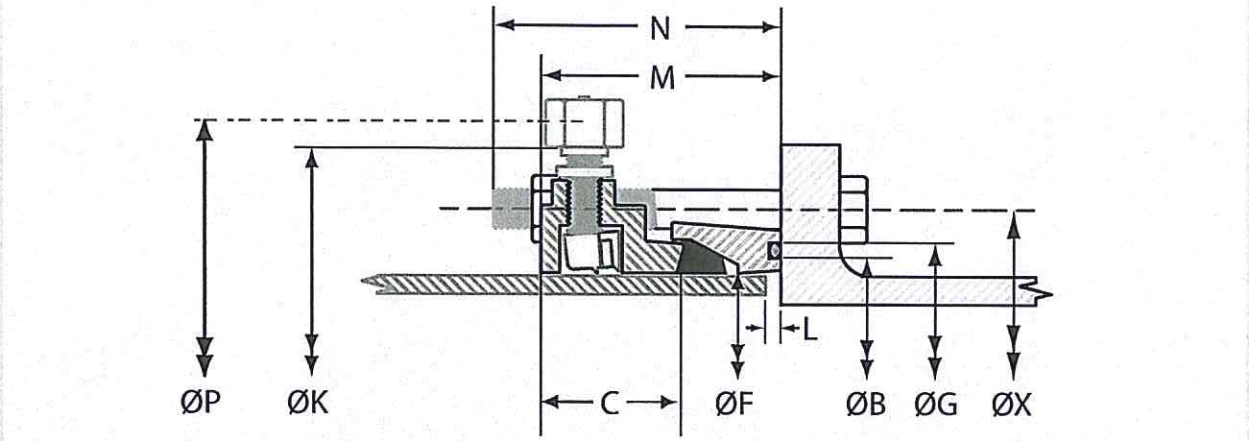

Nominal Pipe Size	Series Number	Restraint Ring K	Restraint Ring F	Restraint Ring C	Gasket Ring F	Gasket Ring B	Gasket Ring G	Bolts No.	Bolts Dia.	Bolts Length	Bolts X	L MAX.	Assembly Deflection Degrees	M	P*	Ship Weight (lbs.)
3	2103	7.5	4.1	2.2	4.1	4.3	4.9	4	⅝	5½	6.00	0.7	5.0	4.0	9.2	14
4	2104	9.0	4.9	2.2	4.9	5.4	6.0	8	⅝	5½	7.50	0.6	5.0	4.0	10.0	20
6	2106	11.0	7.0	2.3	7.0	7.5	8.1	8	¾	6	9.50	0.8	5.0	4.3	12.1	32
8	2108	13.5	9.2	2.4	9.2	9.8	10.4	8	¾	6	11.75	0.9	5.0	4.5	14.3	38
10	2110	16.0	11.2	2.5	11.2	11.8	12.4	12	⅞	7½	14.25	1.0	3.0	4.7	16.3	65
12	2112	19.0	13.3	2.5	13.3	13.8	14.4	12	⅞	7½	17.00	1.0	3.0	4.8	18.4	73
14	2114	21.0	15.5	2.5	15.5	16.1	16.9	12	1	8	18.75	1.3	2.0	5.0	20.6	89
16	2116	23.5	17.6	2.5	17.6	18.2	19.0	16	1	8	21.25	1.3	2.0	5.0	22.6	109
18	2118	25.0	19.7	2.6	19.7	20.2	21.0	16	1⅛	8½	22.75	1.3	1.5	5.1	24.7	134
20	2120	27.3	21.8	2.6	21.8	22.4	23.2	20	1⅛	8½	25.00	1.3	1.5	5.1	26.8	157
24	2124	32.0	26.0	2.6	26.0	26.7	27.5	20	1¼	8½	29.50	1.3	1.0	5.1	31.0	192
30	2130	38.5	32.2	3.3	32.2	32.9	34.1	28	1¼	10	36.00	2.0	1.0	6.0	38.8	296
36	2136	45.5	38.5	3.3	38.5	39.2	40.4	32	1½	10½	42.75	2.0	1.0	6.0	44.6	426
42	2142	52.3	44.7	4.1	44.7	45.8	47.0	36	1½	12	49.50	2.0	1.0	8.0	50.8	642
48	2148	58.8	51.0	4.1	51.0	52.1	53.3	44	1½	12	56.00	2.0	1.0	8.0	57.1	797

* The "P" dimensions is measured with torque-limiting nuts twisted off.

Nominal Pipe Size	Minimal Distance Required To Install N
3	4.75
4	4.56
6	5.00
8	4.88
10	6.31
12	6.25
14	6.62
16	6.56
18	6.94
20	6.81
24	6.62
30	7.88
36	8.12
42	9.38
48	9.25

MEGAFLANGE TESTING RESULTS

PVC TESTING

- Quick Burst Test
- DR18 tested to 755 PSI
- DR14 tested to 985 PSI
- Long Term Pressure Test
- On DR18 PVC pipe at 615 PSI for 1000 hours without failure
- Cyclic Pressure Test
- DR18 tested from 94 to 188 PSI for over 1,000,000 cycles

DUCTILE IRON AND STEEL TESTING

- Leakage Test (one minute required)
- Tested to twice rated pressure without leakage
- Hydrostatic Test (one minute required)
- 3 inch though 6 inch sizes tested to 5 times rated pressure
- 8 inch and 10 inch sizes tested to 4 times rated pressure
- 12 inch size tested to 3 times rated pressure
- Flexural Test
- Tested to withstand a bending moment based on requirements of NFPA 12-1991 "Standard for Installation of Sprinkler Systems"

Note: Dimensions are in inches and are subject to change without notice. All Dimensions are ± 1%.

Pipe Size	Ductile Iron Pipe Pressure (PSI)	Steel Pipe* Pressure (PSI)	C900/C905 PVC Pipe DR14 Pressure (PSI)	C900/C905 PVC Pipe DR18 Pressure (PSI)	C900/C905 PVC Pipe DR25 Pressure (PSI)	C900/C905 PVC Pipe DR32.5 Pressure (PSI)	IPS PVC Pipe* SDR17 Pressure (PSI)	IPS PVC Pipe* SDR21 Pressure (PSI)	IPS PVC Pipe* SDR26 Pressure (PSI)
3	350	350	-	-	-	-	250	200	160
4	350	350	305	235	165	-	250	200	160
6	350	350	305	235	165	-	250	200	160
8	350	350	305	235	165	-	250	200	160
10	300	350	305	235	165	-	250	200	160
12	350	350	305	235	165	-	250	200	160
14	350	-	-	235	165	125	-	-	-
16	350	-	-	235	165	125	-	-	-
18	300	-	-	235	165	125	-	-	-
20	250	-	-	235	165	125	-	-	-
24	200	-	-	-	165	125	-	-	-
30	150	-	-	-	-	-	-	-	-
36	150	-	-	-	-	-	-	-	-
42	150	-	-	-	-	-	-	-	-
48	150	-	-	-	-	-	-	-	-

*Transition Gasket Required
NOTE: For Application on HDPE pipe see EBAA's HDPE Restraint Catalog Sheet.

MEGAFLANGE Components

The Series 2100 MEGAFLANGE restrained flange adapter is comprised of two rings. The first is the restraint ring which incorporates wedges around the circumference of the ring to grip the pipe firmly and securely. The wedge style restraint offers enormous pullout strength when compared to set screw restraints. The resiliency of the wedge style restraint allows the MEGAFLANGE to withstand severe moment loads. The restraint ring and it's sub-components are protected from corrosion by the MEGA-BOND® Restraint Coating System. For more information regarding MEGA-BOND see our MEGA-BOND Brochure found at www.ebaa.com.

The second ring is the gasket ring which separates the seals dedicated to each sealing surface. This ring allows pipe to be cut to lengths in the field at a tolerance of 0.6 inch or more. In addition, the gasket ring also enables the joint to deflect during assembly. The gasket ring is coated with a NSF 61 approved Fusion Bonded Epoxy (FBE) so that it may be utilized on potable drinking water systems.

DEFLECTION

Traditional flanged joint connections require a tremendous amount of torque on the bolts to achieve a good seal. The pipe layout must be precisely planned to avoid misalignment errors due to deviations in appurtenances of pipe fabrication.

The Series 2100 MEGAFLANGE is a speedy, on-site fabrication tool which is generous in its deflection limits, from 0.5° to 5° depending on pipe size. The deflection capabilities provided by the gasket ring allow offset of almost nineteen inches of an eighteen foot length of pip through the eight inch size.

Series 2000PV

Mechanical Joint Restraint for PVC Pipe

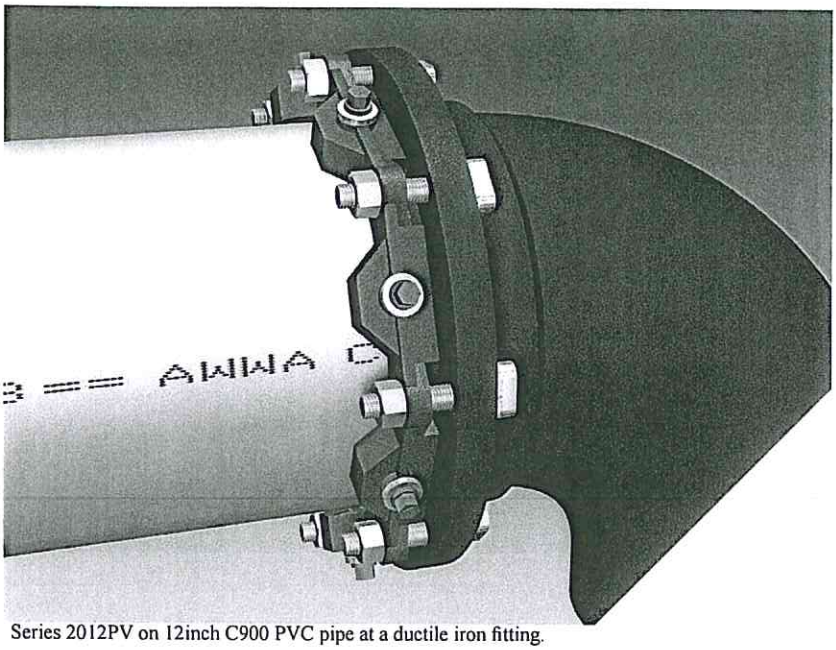

Series 2012PV on 12inch C900 PVC pipe at a ductile iron fitting.

Nominal Pipe Size	Series Number	Shipping Weight
3	2003PV	7.0
4	2004PV	8.8
6	2006PV	12.1
8	2008PV	16.3
10	2010PV	26.0
12	2012PV	31.4
14	2014PV	47.6
16	2016PV	52.8
18	2018PV	61.8
20	2020PV	70.9
24	2024PV	92.9
30	2030PV	128.5
36	2036PV	161.3
42	2242*	652.0
48	2248*	711.1

*Restraint for pipe size 42 inch and greater, please refer to Series 2200 Brochure found at www.ebaa.com.

U.S. Patent No.
4627775 4896903 5071175

Features and Applications:

- For restraining plain end PVC pipe at mechanical joint fittings and appurtenances
- Sizes 3 inch through 36 inch
  Sizes 42 inch through 48 inch accommodated by Series 2200
- MEGA-BOND® Restraint Coating System
  For more information on MEGA-BOND, refer to www.ebaa.com
- Constructed of ASTM A536 Ductile Iron
- The mechanical joint follower gland is incorporated into the restraint
- Accommodates full deflection of the mechanical joint on which it is used
- Heavy duty thick wall design
- Support Products Available:
  - Split mechanical Joint style available for 3 inch through 12 inch
    EBAA Series 2000SV
  - Solid restraint ring harness available for C905 PVC pipe bells
    EBAA Series 2800
  - Split restraint ring harness available for C900 and C905 PVC pipe bells and PVC fittings
    EBAA Series 1500, 1600 and 2500
- All 2000PV and related restraint products can be furnished as packaged accessories complete with appropriate restraint, gasket, lubrication and bolting hardware

For use on water or wastewater pipelines subject to hydrostatic pressure and tested in accordance with either AWWA C600 or ASTM D2774.

Copyright 2013 © EBAA Iron, Inc. All Rights Reserved.

AIR RELEASE VALVE

SERIES NO. 22SV

STANDARD MATERIALS OF CONSTRUCTION

PART NO.	PART NAME	MATERIAL
1	BODY	CAST IRON ASTM A126, CLASS B (INTERIOR / EXTERIOR FUSION BONDED EPOXY)
2	COVER	CAST IRON ASTM A126, CLASS B (INTERIOR / EXTERIOR FUSION BONDED EPOXY)
3	LEVER FRAME	STAINLESS STEEL T316, ASTM A240
4	SEAT	STAINLESS STEEL T316, ASTM A276
5	FLOAT	STAINLESS STEEL T316, ASTM A240
6	GASKET	COMPRESSED NON-ASBESTOS FIBER
7	COVER BOLT	STAINLESS STEEL T316, ASTM F593
10	FLOAT ARM	STAINLESS STEEL T316, ASTM A240
11	ORIFICE BUTTON	VITON
12	PIVOT PIN	STAINLESS STEEL T316, ASTM A479
13	PIN RETAINER	STAINLESS STEEL PH 15-7 MO
14	PIPE PLUG	STAINLESS STEEL
17	FLOAT RETAINER	STAINLESS STEEL T316, ASTM F879
21	LOCATOR	STAINLESS STEEL T316, ASTM F593
34	LOCK WASHER	STAINLESS STEEL T316, ASTM A240

NOTE: ALL SPECIFICATIONS AS LAST REVISED.

MATERIALS OF CONSTRUCTION	DATE 2/3/10
VAL-MATIC® VALVE AND MANUFACTURING CORP.	DRWG. NO. VM-22SV-M

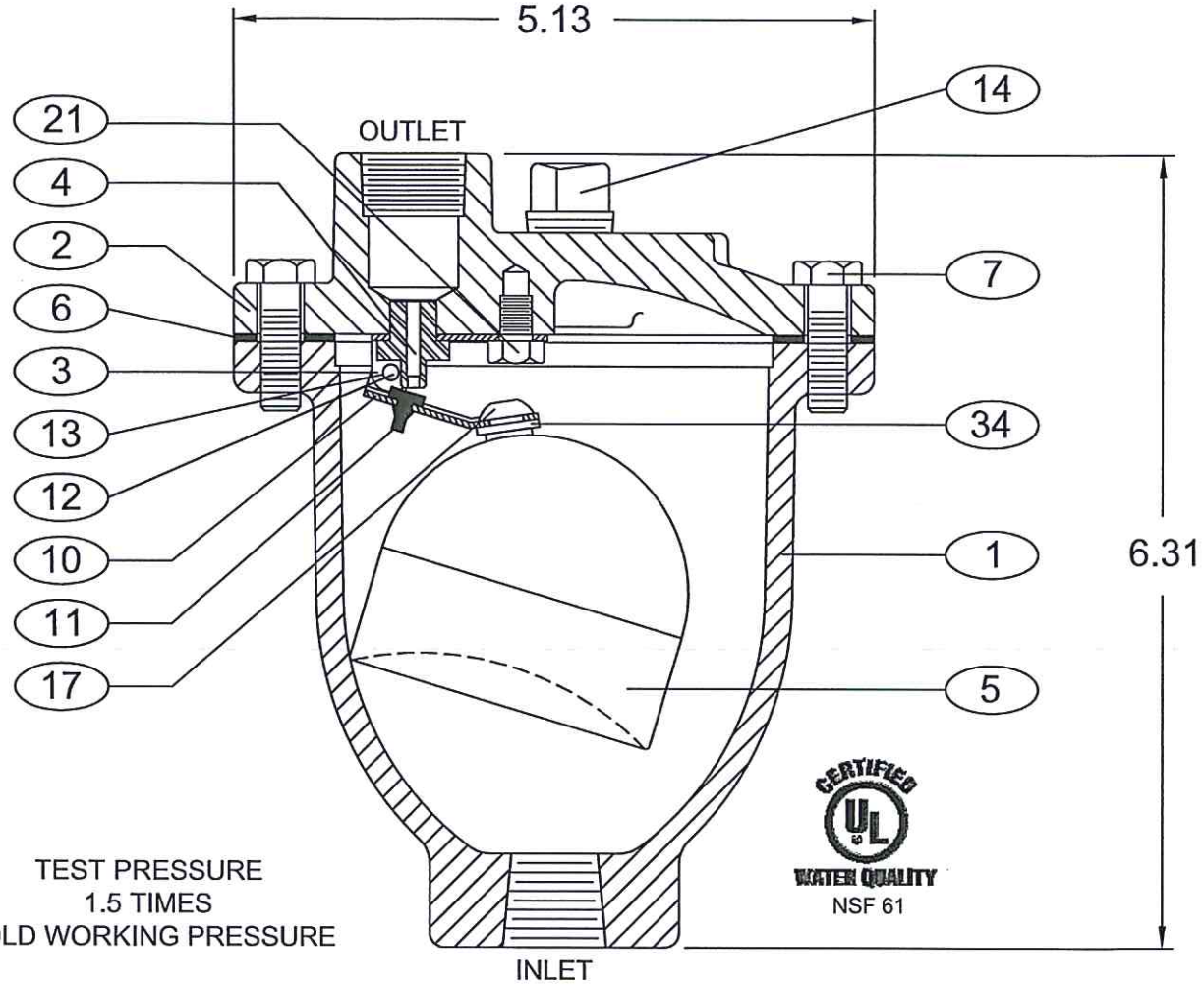

SEE DRAWING NO. VM-22SV-M FOR STANDARD MATERIALS OF CONSTRUCTION

VALVE SIZE	MODEL NUMBER	INLET SIZE	OUTLET SIZE	MAX. W.P. P.S.I.	ORIFICE SIZE
1/2" - 3/4"	22.4SV	3/4" NPT	1/2" NPT	175	3/32"
1"	22.3SV	1" NPT	1/2" NPT	175	3/32"
1/2"-3/4"-1"	22.9SV	1" NPT	1/2" NPT	300	1/16"

WHEN MULTIPLE SIZE INLETS ARE INDICATED FOR A SPECIFIC MODEL NUMBER, THE VALVE IS THREADED FOR THE LARGEST SIZE INDICATED AND A REDUCER BUSHING IS PROVIDED FOR THE SMALLER SIZES.

1 BODY
2 COVER
3 LEVER FRAME
4 SEAT
5 FLOAT
6 GASKET
7 COVER BOLT
10 FLOAT ARM
11 ORIFICE BUTTON
12 PIVOT PIN
13 RETAINING RING (NOT SHOWN)
14 PIPE PLUG
17 FLOAT RETAINER
21 LOCATOR
34 LOCK WASHER

AIR RELEASE VALVE

DATE 1-24-11

VAL-MATIC VALVE AND MANUFACTURING CORP.

DRWG. NO. VMC-22SV

WOODFORD

Freezeless IOWA® Yard Hydrant Model Y34 & Y1

IOWA® hydrants are used for filling field spray equipment, cleaning tools and equipment, lawn and garden care, watering livestock - immediate water flow even in sub zero temperatures.

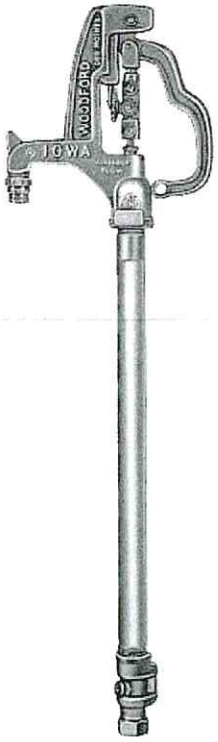

Specifications:

Female Inlet: Model Y34 - ¾" NPT
Model Y1 - 1" NPT

Casing: Model Y34 - 1" Galvanized Steel Pipe
Model Y1 - 1¼" Galvanized Steel Pipe

Operating Rod: ⅜" Galvanized Steel Pipe

Drain Hole: Tapped - ⅛" N.P.T.

Removable Nozzle: ¾" Brass Male Hose Nozzle

Optional At Additional Cost:
1" brass pipe outer casing
⅜" brass pipe operating rod
1" hose nozzle

Features:

- Adjustable Link - Provides easy and positive adjustment of the lever lock tension.
- Rod Guide - Eliminates side pull on rod, reduces wear on packing, packing nut & stem.
- Flow Finder and Lock - A simple cam that can be set to automatically obtain the same flow each time or lock against accidental opening.
- Long Life Packing - Graphite packing for lubricity and long life.
- One Piece Variable Flow Plunger - Large cushion type seal for longer life - is not easily damaged and assures shut-off even when foreign particles are present. Automatic drain feature - plunger opens drain to prevent freezing - closes at any flow to prevent wasting water.
- Maintenance & Repair - Woodford has manufactured the IOWA® hydrant since 1929, and although many improvements have been made through the years, all parts are interchangeable. All repairs can be made from top of unit without removing hydrant from the ground.
- Maximum Working Pressure: 125 p.s.i.
- Maximum Temperature: 120° F

Rough-In

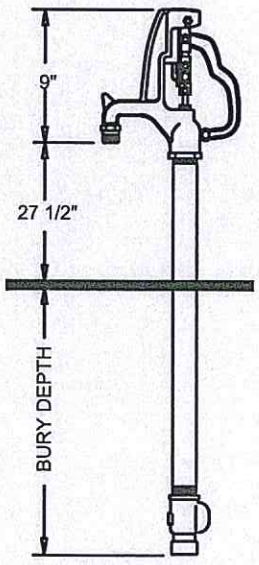

SHIPPING WEIGHT

Bury Depth (Ft)	1	2	3	4	5	6*	7*
Model Y34 (Lbs)	15	17	19	22	24	26	28
Model Y1 (Lbs)	18	20	22	25	28	31	34

*Must ship by truck line due to length.

When ordering, specify model and bury depth.

©2008 WOODFORD Mfg.

Rev. 08/08 Form No. Y34.103

WOODFORD MFG. CO. 06/29 15p VALVES

WOODFORD

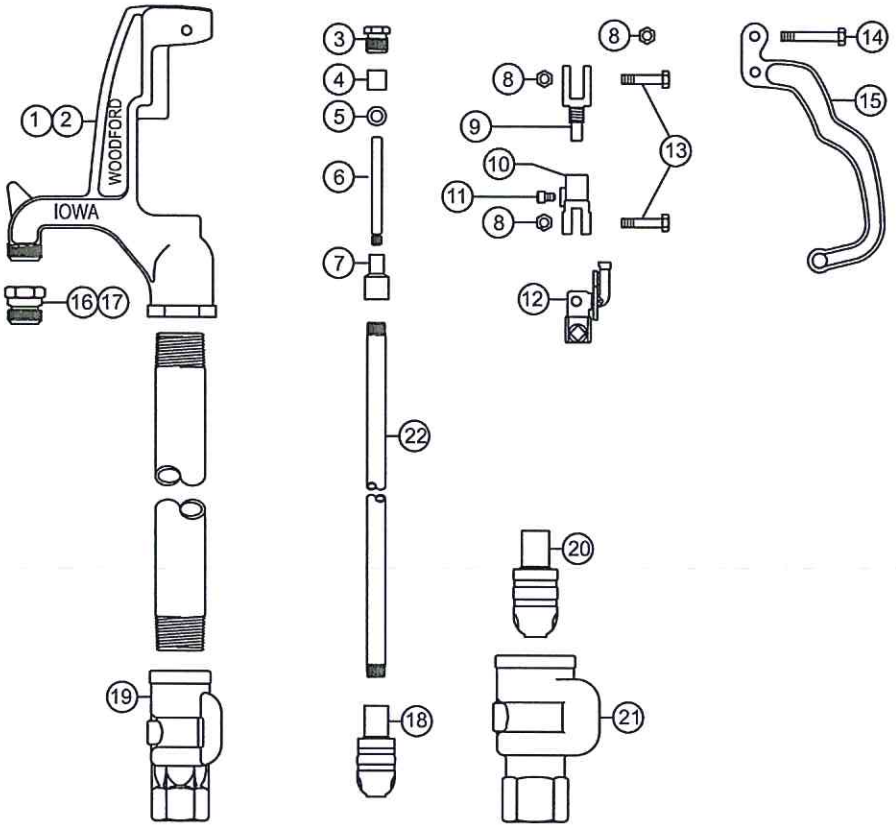

MODEL Y34 & Y1 PARTS LIST

ITEM	PART#	DESCRIPTION
	15003	Y34 Head Assembly (Includes Items 1, 3-16)
	15001	Y1 Head Assembly (Includes Items 2, 3-15 & 17)
1	15004	Y34 Head with 3/4" Nozzle
2	15002	Y1 Head with 3/4" Nozzle
3	10100	Packing Nut
4	10101	Packing
5	10102	Packing Support Washer
6	10104	Brass Rod Stem
7	10011	Reducing Coupling
8	10206	Hex Nut (3)
9	10009	Upper Link
10	15007	Lower Link (Includes Item 11)
11	10019	Set Screw (2)
12	15008	Cam & Clevis Assembly
13	10020	Link Bolt (2)
14	10021	Lever Bolt
15	10008	Lever
16	10004	3/4" Brass Hose Nozzle (Standard)
17	10007	1" Brass Hose Nozzle (Optional)
18	10105	Y34 Plunger
19	10018	Y34 Valve Body (3/4" NPT Inlet)
20	10106	Y1 Plunger
21	10017	Y1 Valve Body (1" NPT Inlet)

ITEM	PART#	DESCRIPTION
22		**Y34 & Y1 OPERATING PIPE (Bury Depth & Length)**
	10023	1' Bury (35 ½" Long)
	10024	2' Bury (47 ½" Long)
	10025	3' Bury (59 ½" Long)
	10026	4' Bury (71 ½" Long)
	10027	5' Bury (83 ½" Long)
	10028	6' Bury (95 ½" Long)
	10029	7' Bury (107 ½" Long)
	10030	8' Bury (119 ½" Long)
	10089	9' Bury (131 ½" Long)
	10090	10' Bury (143 ½" Long)
	RK-Y34	Repair Kit (Includes Items 3-6 & 18)
	RK-Y1	Repair Kit (Includes Items 3-6 & 20)
	RK-YHL	Repair Kit (Includes Items 8-14)

For more information contact...

WOODFORD MANUFACTURING COMPANY

2121 Waynoka Road, Colorado Springs, Colorado 80915 • **Phone:** (800) 621-6032 • **Fax:** (800) 765-4115

To view our complete product line visit: ***www.woodfordmfg.com*** *or email:* ***sales@woodfordmfg.com***

A Division Of WCM Industries, Inc.

AMERICAN Fastite® Joint Pipe

For Water, Sewage or Other Liquids

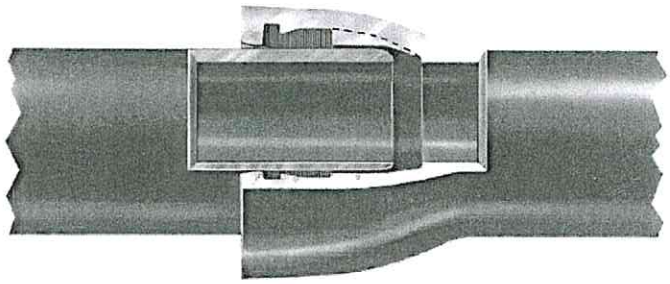

AMERICAN Fastite Joint Pipe in sizes 4"-64" for water, sewage or other liquids has the proven long-life and high-strength qualities inherent in pipe produced centrifugally in accordance with AWWA C151. In addition, this significant AMERICAN development, a dependable, single gasket, push-on type joint meeting the requirements of AWWA C111, affords the customer lower joint cost and time-saving advantages in installation. It provides exceptional strength and flexibility and has been widely accepted by engineers, contractors and utility officials since the 1950s. For added flexibility during construction, and for possible elimination of bends, a liberal 5° allowable deflection is standard in all sizes through 30", offering 21" offset in a 20' length of pipe. Liberal deflection can also be provided in larger diameter pipe with standard and Special Fastite Deflection Bells.

The patented AMERICAN Fastite Joint embodies many advanced design features and is rated for a water working pressure of 350 psi. For specific conditions, ductile iron piping with this joint has been approved for much higher pressure conditions. The socket, which is scientifically designed with two gasket recesses and a dividing buttress, is manufactured to close tolerances so that the gasket is self-centered, securely confined, and firmly compressed for a permanent, tight, trouble-free joint. The Fastite joint seal, bubble-tight under vacuum and external pressure, becomes even tighter with the application of internal pressure due to a specially designed wedging surface in the socket.

Fastite Joint Assembly

The bell opening is slightly tapered to provide easy entry of the pipe end; the flared socket design permits liberal joint deflection. The plain end of the pipe is tapered or rounded to facilitate entry into the bell and self-centering in the gasket. On pipe cut in the field, the plain end can be easily beveled and smoothed by the use of a portable grinding wheel or other suitable apparatus. Methods of cutting ductile iron pipe are described in Section 3.

A stripe is painted on the plain end of AMERICAN Fastite Joint Pipe to provide a visual means of checking the joint alignment and to assure proper insertion. See page 2-10 for detailed assembly instructions.

Fastite Gasket

The Fastite Joint sealing component—a molded synthetic rubber ring gasket of two hardnesses, shaped to fit the configuration of the gasket socket—is manufactured per all requirements of ANSI/AWWA C111/A21.11 and under AMERICAN's own rigid specifications, assuring closely controlled dimensional and hardness properties. The smaller end of the gasket is of harder rubber, approximately 85 durometer hardness, which provides a strong shoulder for self-centering on the gasket buttress, a permanent seal against cold flow, and protection from deterioration. The larger end of the gasket is of softer rubber, approximately 65 durometer hardness, providing ease of assembly and positive sealing. The design assures effective sealing at low or high pressures and in straight or deflected joint alignment. It also eliminates any concerns of infiltration or root intrusion, and assures positive sealing against negative pressure, thus preventing gasket "pullout" should a vacuum be created in the line.

A taper on the inside of the gasket allows the entering pipe to locate and center on the hard section and reduces friction loads during

subsequent assembly. The snug fit and the hard section of the gasket, in conjunction with the design of the buttress, act to restrain the gasket against dislodgment during assembly. Additional internal pressure results in increased tightness of the seal when pipe is either in straight alignment or deflected.

Gaskets made of SBR (Styrene Butadiene Rubber) are standard. For information on gaskets made of special types of rubber, for applications involving air or liquid temperatures in excess of 150°F, or for chemical, hydrocarbon or other special service applications, and for installations in contaminated soils where permeation through gaskets might be a concern, consult AMERICAN for recommendations. See Table 2-1.

Fastite Lubricant

AMERICAN Fastite Joint Lubricant is a non-toxic water soluble material imparting neither taste nor odor to the conveyed water and is ANSI/NSF 61 approved. The lubricant is suitable for use in hot or cold weather and will adhere to wet or dry pipe. AMERICAN Fastite Joint Pipe can be assembled when submerged, though for such installation, special AMERICAN underwater joint lubricant is recommended. See Table No. 2-5 for appropriate lubricant quantities.

Fastite Joint Materials

Standard joint materials include Fastite plain rubber gaskets and a sufficient supply of Fastite joint lubricant. Fastite pipes are most often readily joined with available excavating equipment; however, assembly tools can be supplied by AMERICAN on a loan basis with a nominal deposit which is refundable upon return of tools in good condition.

Fittings

AMERICAN Fastite fittings in all sizes and AMERICAN 4"-48" Mechanical Joint Fittings are used with Fastite Joint pipe. See Sections 4 and 5.

Coating and Lining

AMERICAN Fastite Joint Pipe can be furnished asphaltic coated, cement lined, or with special coating or lining where required. See Section 11.

Fastite Gaskets

Table No. 2-1

Common Name or Trade Name*	Chemical Name	Temperature Capability**	Common Uses
Plain Rubber	Styrene Butadiene Copolymer(SBR)	150°F	Fresh Water, Salt Water, Sanitary Sewage
Plain Rubber (conductive)	Styrene Butadiene Copolymer(SBR)	150°F	Electrical continuity for thawing of Service Water and Sewage
EPDM	Ethylene Propylene Diene Monomer	250°F	Water, Sewage, Ketones, Dilute Acids and Alkalies, Vegetable Oil, Alcohols, Air
Neoprene	Polychloroprene(CR)	200°F	Fresh Water, Sewage
Nitrile Buna-N	Acrylonitrile Butadiene(NBR)	150°F	Non-Aromatic Hydrocarbons, Petroleum Oil, Hydraulic Fluids, Fuel Oil, Fats, Oil, Grease†
Fluoroelastomer Fluorel Viton®***	FKM	300°F	Aromatic Hydrocarbons, Gasoline, Refined Petroleum Products, most Chemicals and Solvents, High Temp., Air (Least permeable of all available Fastite gasket rubbers)

*AMERICAN reserves the right to furnish any Trade or Brand rubber for the chemical formulation specified.
**Temperature is in reference to conveyed fluid.
***Viton® is a registered trademark of DuPont Dow Elastomers.
Refer to Section 11 for temperature and service capabilities of pipe linings.
Refer higher temperatures or other special requirements to AMERICAN for recommendations regarding suitable gasket material.
†This gasket rubber is chemically resistant in the non-potable water uses shown but is not as resistant to permeation in potable water applications as FKM.
All Fastite gaskets made from the materials in the above table are suitable for use with water containing normal concentrations of chloramine. Where increased resistance to chloramine is desired, neoprene or fluoroelastomer materials should be considered.

AMERICAN Fastite® Joint for Ductile Iron Pipe

ANSI/AWWA C111/A21.11

Standard Dimensions

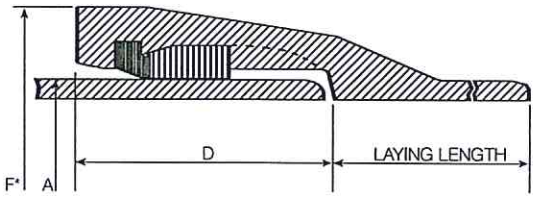

Table No. 2-2

Size in.	Nominal Laying Length ft.	Dimensions in Inches		
		A Outside Diameter	D Depth of Socket	F* Bell O.D.
4	20	4.80	3.31	6.40
6	20	6.90	3.38	8.60
8	20	9.05	3.75	11.16
10	20	11.10	3.75	13.25
12	20	13.20	3.75	15.22
14	20	15.30	5.23	17.73
16	20	17.40	5.23	19.86
18	20	19.50	5.50	22.16
20	20	21.60	5.50	24.28
24	20	25.80	5.50	28.50
30	20	32.00	6.50	34.95
36	20	38.30	6.50	41.37
42	20	44.50	7.50	48.27
48	20	50.80	8.00	54.71
54	20	57.56	8.50	61.65
60	20	61.61	8.75	65.80
64	20	65.67	9.00	70.04

*Dimensions subject to change at our option. Check AMERICAN if exact dimensions required.
See Section 3 for additional information on ductile iron pipe.
See Sections 4 and 7 for information on Fastite fittings.

AMERICAN Fastite® Joint Pipe
Allowable Joint Deflection

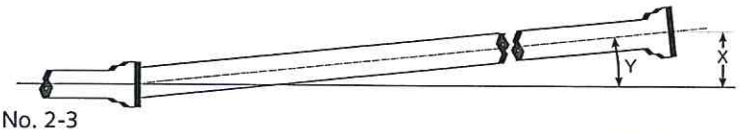

Table No. 2-3

Size in.	Nominal Laying Length ft.	Maximum Recommended Deflection†					
		Standard Bell			Special Deflection Bell		
		X Offset per 20' Length in.	Y Deflection Angle	Radius of Curve* ft.	X Offset per 20' Length in.	Y Deflection Angle	Radius of Curve* ft.
4	20	21	5°	230	-	-	-
6	20	21	5°	230	-	-	-
8	20	21	5°	230	-	-	-
10	20	21	5°	230	-	-	-
12	20	21	5°	230	-	-	-
14	20	21	5°	230	-	-	-
16	20	21	5°	230	-	-	-
18	20	21	5°	230	-	-	-
20	20	21	5°	230	-	-	-
24	20	21	5°	230	-	-	-
30	20	21	5°	230	-	-	-
36	20	17	4°	285	21	5°	230
42	20	12	3°	380	21	5°	230
48	20	12	3°	380	17	4°	285
54	20	12	3°	380	17	4°	285
60	20	12	3°	380	17	4°	285
64	20	12	3°	380	17	4°	285

*Approximate radius of curve produced by a succession of 20' lengths of pipe fully deflected.
†Special Deflection Bells must be specifically ordered and will be marked with white bell face for easy identification. For easiest assembly, the joints should be assembled with the pipe in reasonably straight alignment. After joint assembly, the pipe may be deflected up to the maximum shown above. Offset distances are based on 20' lengths.

Maximum Allowable Separation

Table No. 2-4

Size in.	S Separation in.
4	⅜
6	⅜
8	¾
10	¾
12	1⅛
14	1⅛
16	1½
18	1½
20	1⅞
24	2¼
30	2¾
36	2⅞
42	2¼
48	2½
54	2⅞
60	3⅛
64	3⅜

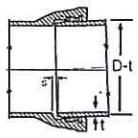

Maximum Allowable Separation, "S", in Standard Bell pipe is approximately equal to the median pipe diameter in inches times the sine of the deflection angle. This is provided for information only and should not be used to determine precise joint deflection.

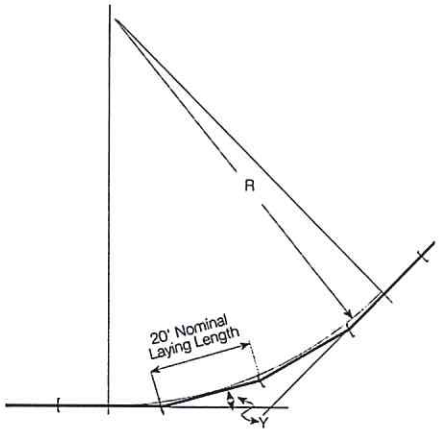

R = Radius of Curve (ft.)

Y = Deflection Angle (degrees)

$$\text{Radius of Curve} = \frac{\text{Nominal Laying Length}}{2 \times \text{Tangent } (Y \div 2)}$$

AMERICAN Fastite® Joint Pipe Assembly Instructions

The AMERICAN Fastite Joint is a push-on type joint meeting all the rigorous requirements of AWWA C111. The ANSI/AWWA C600 Standard covers in detail the installation of ductile iron water mains, including assembly instructions for push-on joint pipe.

Field-cutting of AMERICAN Ductile Iron Pipe can be easily performed, thus eliminating the necessity for factory-made special lengths of Fastite pipe. The plain end of Fastite pipe cut in the field requires little or no preparation for assembly into the socket of a mechanical joint fitting. Where a cut pipe is to be assembled into a Fastite socket, the required beveling or rounding of the plain end can be easily accomplished by the use of a portable grinding wheel or other suitable apparatus. Methods of cutting ductile iron pipe are described in Section 3.

The AMERICAN Fastite Joint requires only one joint component, the rubber gasket*, which when properly installed, fits snugly in the gasket recess in the bell socket. A special lubricant supplied with the pipe is applied to the plain end and the inside surface of the gasket before assembly. The pipe end is tapered or rounded to provide self-centering of the plain end in the gasket and ease of assembly. A circumferential stripe on the plain end provides a visual indication for checking the proper insertion of the joint. The stripe, shown in the photographs illustrating assembly methods, substantially disappears into the bell when the plain end is fully inserted into the socket with the two lengths of pipe in alignment. Joints can then be safely deflected up to the extent shown in Table No. 2-3. In deflected joints, the stripe will typically be visible to some extent after assembly.

Easier assembly is effected if the pipe is suspended an inch or so off the bottom of the trench during the jointing operation.

The following instructions should be followed in order to properly assemble the joints and to fully realize the maximum speed and ease of assembly of the Fastite Joint:

1. Clean socket and plain end thoroughly, **removing** mud, gravel, or **any** other **matter that might cause the front of the gasket to protrude into the path of the entering spigot.**

2. Insert gasket fully into the gasket recess of the socket, large end of the gasket entering first. Gasket may be installed with one or two V-shaped folds as shown (Photo 1). After the gasket is in place at the bottom, the top of the gasket is positioned fully into the gasket recess. Gaskets and lubricant to be installed in very cold weather should be warmed first (as by storage in a heated equipment cab or pick-up, etc.) for optimum assembly.

3. Apply a thin film of regular AMERICAN Fastite Joint Lubricant to the rounded or tapered spigot end of the pipe, the immediate outside pipe surface between the stripe and the nose of the pipe (Photo 2), and also to the inside surface of the gasket. **Special AMERICAN Fastite Joint Lubricant intended specifically for underwater or very wet installations can be supplied when requested.**

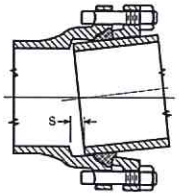

Photo 1

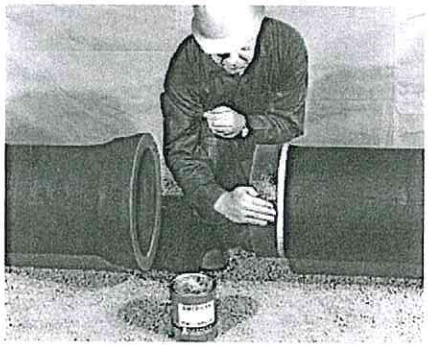

Photo 2

*Gaskets not used immediately should be stored in a cool location, out of direct sunlight.

Caution: If a spigot end contacts the ground or trench side after lubrication, any adhering dirt or rocks should be cleaned off and the area re-lubricated prior to assembly.

4. Insert the plain end in the socket. For optimum assembly it is preferable that the entering pipe be in reasonably straight alignment; however, the Fastite Joint may be assembled if necessary with the pipe deflected within its rated deflection. (Exception: If Fast-Grip gaskets are being used, straight alignment must be maintained.) Push the plain end into the socket using any of the applicable assembly methods described hereinafter. If the joint cannot be assembled with a moderate force, remove the pipe and check for the cause of the difficulty, such as improper positioning of gasket, insufficient or wrong type lubricant, dirt under or behind the gasket, dirt adhering to the pipe, or any other cause which would result in obstruction or increased friction between pipe end and gasket surface. **For assurance of proper assembly, a thin automotive, blade-type feeler gauge can also be used if desired for quick and easy probe confirmation of correctly installed axial gasket position around the joint.**

5. "Backwards" installation. AMERICAN does not recommend "backward laying" (bells assembled over spigots, rather than spigots inserted into bells as pictured in this literature) of large-diameter ductile iron pipe in buried installations. AMERICAN can furnish bell and plain end fittings to minimize the need for backward pipe laying. Other devices such as sleeves and couplings may also be employed for this reason. However, if this condition cannot be avoided, we strongly recommend that installers contact AMERICAN for instructions on how to reduce the potential for problems that could occur when assembling pipe in this manner.

AMERICAN Pipe Assembly Mechanisms

In general, Fastite joints or other Fastite gasketed pipes may be readily pushed or pulled together without the need for complicated tools or substantial manpower. This is most often accomplished with the procedures discussed on page 2-14. In general, the joints of AMERICAN push-on pipes are purposefully "tight," and most joints require an assembly force of about 100 to 200 pounds or more of assembly force per inch of pipe diameter (i.e. a 12" joint might require about 12 x 100 or 1,200 pounds of assembly force).

In pulling operations, simply wrap a sound wire rope choker cable or nylon sling around the barrel of the entering pipe. Secure the thimble eye or other end loop of the choker to a suitably anchored pulling device (e.g. backhoe, come-along, etc.). Use the mechanism to pull the cable taut in the assembly direction (Photo 3). Continue pulling the cable in a smooth, continuous motion until the joint is in the fully assembled position. If desired for special conditions, AMERICAN can furnish suitable, simple come-alongs and choker cables for man-

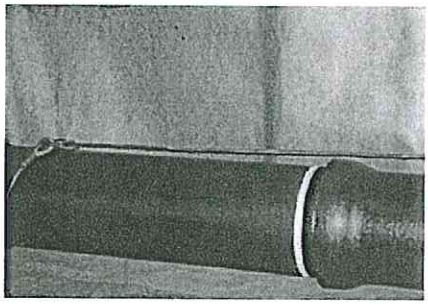

Photo 3

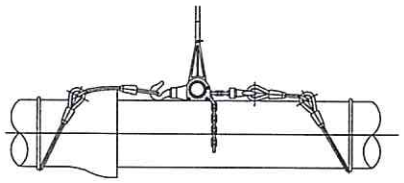

Figure 1

power assembly of most **4"-24"** pipes (See Figure 1 and specify pipe sizes involved).

The joints may normally be disassembled in a similar manner, reversing the direction of the pull with the choker cable (Photo 4). It is also sometimes helpful to use rebating or wiggling deflection to aid in the disassembly of push-on joint pipes, particularly when pipes have been installed for some time prior to removal.

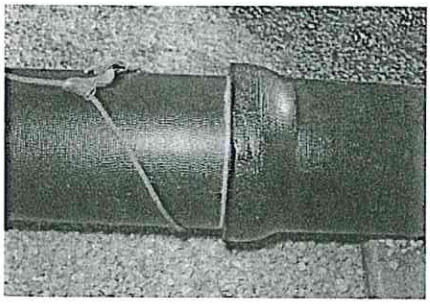

Photo 4

30"-64" Pipe

Large pipes are most often readily pushed or pulled together with heavy excavating/earthmoving equipment available on-site (see page 2-14). In cases where assembly of pipes by manpower is desired, AMERICAN can provide special assembly tools and rigging which can be used for assembling most pipes of all sizes (Photo 5). These tools consist of a heavy-duty roller chain hoist, a steel pipe-end hook and snatch block, and associated wire rope and chain tackle (Photo 5) to attach all the rigging together to effect "double line" assembly from the top of the pipe (Photo 6). The snatch block pulley and twin line rigging approximately doubles the assembly force from the strong come-along, making possible the assembly of up to 64" full-length pipe joints from the top of the pipe (Photo 7).

Photo 5

Photo 6

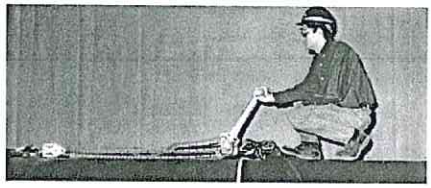

Photo 7

Fittings and Short Pipes

Push-on fitting or short pipe joint assembly is basically the same as that of standard length pipe, though special rigging may be necessary to hold these short items reasonably stable for assembly. AMERICAN can provide some rigging items which may be helpful in the assembly of 16" and smaller fittings. Similar concepts can also be applied to the assembly of larger fittings with stronger field-fabricated rigging suitable for the specific installation conditions. See also Push-On Fittings Assembly Instructions in Section 4.

Field Rounding

Occasionally, field rounding of pipe ends may be necessary to accomplish assembly, particularly when large-diameter pipes are cut to be assembled into mechanical joints or couplings. Need for rounding in assembly of mechanical or stuffing-box-type joints can be predetermined by a difficulty in sliding the gland or end ring over the end of the pipe. Rounding may be accomplished in the following manner using a mechanical jack and shaped blocks. (Note: This procedure may also be used with the assemblies involving push-on joint pipe, fittings, valves, etc.; however, rounding is less frequently necessary for assembly of push-on joints.)

1. Measure/determine the minimum (minor) diameter of the ends to be rounded.

2. Place the jack and the shaped blocks in line with the minor diameter as shown in the attached sketch using a sound 4"x4" spacer timber cut square to the required length to take up the space.

3. Apply a load carefully with the jack only until the "minimum diameter equals the maximum diameter," or until the gland will easily slip over the end. No more jacking should be attempted or necessary - **DO NOT ATTEMPT TO PERMANENTLY ROUND END.**

4. After the joint is completely assembled and the bolts (if involved) are uniformly tightened to the required torque, carefully relax and remove the jack and timbers from the pipe.

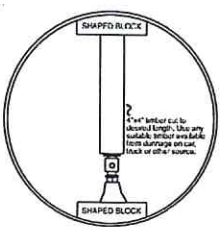

Note: Field rounding operations should be conducted without backfill on any part of large-diameter pipes and prior to encasing any part of pipe in concrete. If the inside of the pipe cannot be accessed to remove jacking materials, pipe ends can alternatively be rounded using external clamping means.

AMERICAN Fastite® Joint Lubricant Requirement by Size of Pipe

64" AMERICAN Fastite Joint pipe being installed in a wastewater application.

Table No. 2-5

Pipe Size in.	Approx. Pounds of Lubricant per Joint	Approx. No. of Joints per Pound of Lubricant
4	.03	33
6	.045	22
8	.06	17
10	.07	14
12	.08	12
14	.09	11
16	.11	9
18	.12	8
20	.14	7
24	.17	6
30	.30	3
36	.36	3
42	.44	2
48	.50	2
54	.59	2
60	.66	1
64	.71	1

AMERICAN Fastite® Joint
Common Assembly Methods

In seeking ways to take even greater advantage of the cost-reducing features of the Fastite Joint, utility contractors have developed other methods of assembling this joint without special tools. The following methods are described for the information of the user, who may elect to use them at his discretion, keeping in mind that these methods may not be effective for all installations and under all field conditions.

Spade or Crowbar Method

This is applicable to the smaller sizes of AMERICAN Fastite Joint Pipe, and consists of centering the lubricated end of the entering pipe in the gasket and then pushing against the bell face of the entering pipe with a spade or crowbar driven into the ground in front of the bell face. This method requires the trench bottom to be fairly firm soil. The method may not be effective in a rocky trench or with a trench that is soft, muddy or sandy. A wooden block between the bell face and the pry bar may increase the leverage. Easier assembly is effected if the pipe is suspended an inch or so off the bottom of the trench.

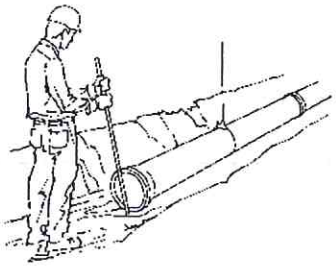

Spade or Crowbar Method

Backhoe and Heavy Equipment Methods

These methods are usually applicable to the intermediate and larger sizes of AMERICAN Fastite Joint Pipe where the bar method might not be effective. It consists of centering the end of the entering pipe in the gasket as the pipe to be assembled is suspended from the backhoe. Then it can be pulled into the adjoining socket with the pipe sling by moving the backhoe arm toward the previously assembled pipe. In other instances, the pipe may be assembled by placing the backhoe or other earth mover bucket or blade against the bell face of the entering pipe and pushing it into the socket. When pushing against the bell face, care should be taken to avoid very small contact areas and possible damage to the pipe bells or spigots. Wood cushions between the backhoe bucket and the pipe are particularly effective in preventing damage.

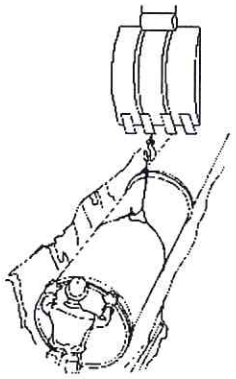

Backhoe and Heavy Equipment Methods

SUBMITTAL DATA SHEET

Sump, Sewage, & Effluent Pumps

DuraMAC™ | Guardian

5025PVSP Sump Pump

3 YEAR LIMITED WARRANTY

See Pumps & Accessories Price List for Limited Warranty details.

With a tough thermoplastic construction, this pump can handle up to 30 gallons per minute.

Sump Pump Performance Curve

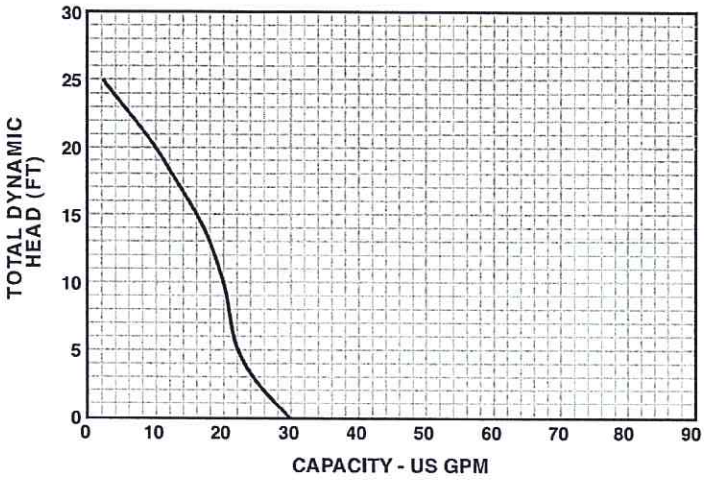

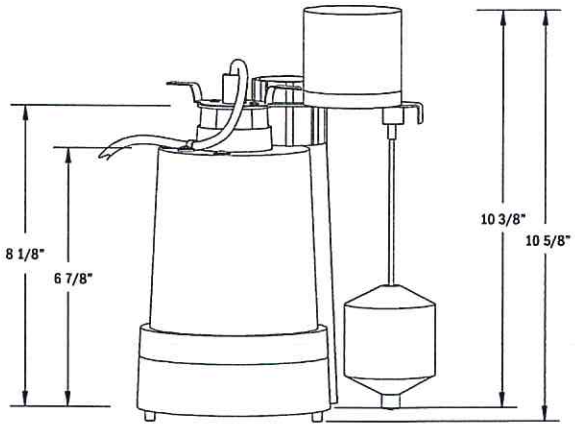

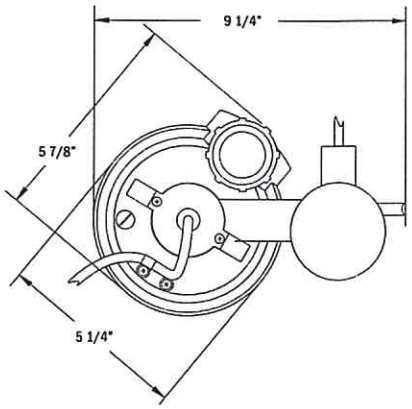

PERFORMANCE CHART

Model	Gallons per Minute in Feet					
	0	5	10	15	20	25
5025PVSP	30	22	20	16	9	2

SUBMERSIBLE PLASTIC SUMP PUMP - 1 1/2" DISCHARGE

Model	HP	Volts	Hz	Amps	Construction	Discharge Size	Cord Length	Solids Handling	RPM	Phase
5025PVSP	1/4	120	60	3.8	Thermoplastic	1 1/2"	10'	1/8"	3450	1

SUBMITTAL INFORMATION

- Split Capacitor Motor - 1/4 HP continuous duty, thermal protected
- Lifts water up to 25' of vertical height
- 10' power cord, 25' cords are available for an additional charge
- Large 1 1/2" discharge for high capacity pumping

NO-LEAD: The weighted average of the wetted surface of this no-lead product contacted by consumable water contains less than one quarter of one percent (0.25%) lead.

EST. 1856 McDonald

A.Y. McDonald Mfg. Co.
P.O. Box 508
Dubuque, IA 52004-0508

Toll Free: 1-800-292-2737
Fax: 1-800-832-9296
Hours: 7:00 a.m. - 5:00 p.m., CST

sales@aymcdonald.com
www.aymcdonald.com

A.Y. McDonald considers the information on this assembly drawing correct when published. Item and option availability, including specifications, are subject to change without notice.

Submitted by:

CONTECH® provides a full range of Corrugated Metal Pipe for severe-to-normal conditions

Coast-to-coast, engineers and contractors rely on CONTECH Corrugated Metal Pipe for culverts, storm sewers, small bridges, stormwater detention systems and conduits. No other type of drainage structure offers the range of structural strength that's available with Corrugated Metal Pipe—it performs where rigid pipe fails.

CONTECH Construction Products Inc. manufactures to repeatable and exacting standards HEL-COR® and ULTRA-FLO® pipe—which has a 0.012 Manning's "n"—in galvanized, Aluminized Steel Type 2, polymer coated and aluminum.

Numerous industry standards for pipe configurations, coatings and linings have been conceived and developed by CONTECH. That is how we have earned the reputation as the world leader in pipe design and innovation.

Long light weight sections make corrugated steel pipe easy to install.

Corrugated Steel Pipe . . . The Core of Strength

Corrugated steel pipe is similar to the superstructure of a building in that it supports the interior walls and gives structure to the facade. Steel is the proven, strong-shouldered material that is coated with zinc, Aluminized Steel Type 2, tough polymer or asphalt to increase durability for prolonged design life. Corrugated steel pipe is the strength at the core of all coatings and linings.

CONTECH's Corrugated Steel Pipe provides the power and tenacity to your culverts, storm sewers and stormwater detention systems to withstand severe environmental conditions and burial depths. We offer coatings and linings to increase the life of installations up to 100 years as well as provide products with a Manning's "n" equivalent to other smooth wall drainage products.

Two primary shapes

Full-round pipe is recommended for most applications. However, for limited headroom conditions, CONTECH produces a pipe-arch shape. The low, wide pipe-arch design distributes the area horizontally to provide adequate capacity without raising the grade.

Corrugations and wall thicknesses

Both CONTECH Pipe and Pipe-Arch are produced in six wall thicknesses including 18, 16, 14, 12, 10 and 8 gage, which are available with either helical or annular corrugations. CONTECH HEL-COR® Pipe (helical corrugations) is furnished with continuous locked seams, and with rerolled annular ends. CONTECH riveted pipe is furnished with annular corrugations only.

Corrugations include 1-$^1/_2$" x $^1/_4$" and 2-$^2/_3$" x $^1/_2$" for economical and efficient metal use in small diameters; 3" x 1" and 5" x 1" offer high sectional properties in large-diameter pipe.

The wide variety of corrugations and thicknesses permits selection of materials for a balanced design to meet specific jobsite conditions. Each project can be designed individually for the most cost-effective combination of corrugations, thicknesses, sizes, materials and installations, maximizing your investment on a job-by-job basis. For guidance, call your local CONTECH sales representative.

CRESLINE-Northwest, LLC®

PVC PRESSURE PIPE SCH-40 & SCH-80

CNWPVC-3

MAY, 2006

PLEASE ORDER BY PART NUMBER.

	SIZE	O.D.	MIN. WALL	WEIGHT PER 100'	FEET PER PALLET	PALLETS PER T.L.	LGTH.	PART NO.
SCH 40 PRESSURE PIPE PVC1120 ASTM D-1785 NSF. POTABLE WATER	½"	.840	.109	16.18	8400	44	20'	42015
	¾	1.050	.113	21.58	6600	40	20	42030
	1	1.315	.133	32.00	5400	32	20	42046
	1¼	1.660	.140	43.40	4000	32	20	42056
	1½	1.900	.145	51.83	3600	28	20	42070
	2	2.375	.154	69.71	2800	24	20	42085
	2½	2.875	.203	110.57	2240	20	20	42102
	3	3.500	.216	144.82	1500	20	20	42111
	4	4.500	.237	213.06	580	28	20	47675
	6	6.625	.280	375.47	400	20	20	47720
	8	8.625	.322	581.77	280	16	20	47735

SCH 40 PIPE IS FURNISHED IN BELLED END LENGTHS AND IS NOT RECOMMENDED FOR THREADING.

SCH 80 PRESSURE PIPE PVC1120 ASTM D-1785 NSF. POTABLE WATER	½"	.840	.147	20.63	5200	60	20'	43010
	¾	1.050	.154	28.02	4400	48	20	43025
	1	1.315	.179	41.23	5200	32	20	43045
	1¼	1.660	.191	57.06	4000	32	20	43065
	1½	1.900	.200	69.19	2360	40	20	43080
	2	2.375	.218	95.89	1860	32	20	43095
	2½	2.875	.276	146.24	1160	36	20	43115
	3	3.500	.300	195.88	1500	20	20	43120
	4	4.500	.337	286.26	580	28	20	43135
	6	6.625	.432	546.56	400	20	20	43150
	8	8.625	.500	830.24	280	16	20	43165

SCH-80 PIPE IS RECOMMENDED FOR THREADING.

SCH-80 PIPE IS FURNISHED IN PLAIN END LENGTHS AND IS GRAY COLOR.

PRESSURE RATINGS
FOR CRESLINE - PVC PIPES
AT 73.4° F

SIZE	½	¾	1	1¼	1½	2	2½	3	4	6	8
SCH-40	600	480	450	370	330	280	300	260	220	180	160
SCH-80	850	690	630	520	470	400	420	370	320	280	250

CONVERSION CHART FOR PRESSURE RATINGS
AT VARIOUS TEMPERATURES FOR CRESLINE - PVC PIPES

TEMPERATURE °F	73.4°	80°	90°	100°	110°	120°	130°	140°
CONVERSION FACTOR	1.00	.88	.75	.62	.50	.40	.30	.22

PRESSURE RATING IS THE ESTIMATED MAXIMUM PRESSURE THAT WATER AS THE MEDIUM IN THE PIPE CAN EXERT CONTINOUSLY FOR A LONG TIME WITH A HIGH DEGREE OF CERTAINTY THAT FAILURE OF THE PIPE WILL NOT OCCUR.

DO NOT USE PLASTIC PIPE AND FITTINGS FOR COMPRESSED AIR.

PALLET QUANTITIES PVC PRESSURE PIPE

PIPE SIZE	FEET PER PALLET	WT. PER PALLET SCH-40
½	8400	1359
¾	6600	1424
1	5400	1728
1¼	4000	1736
1½	3600	1850
2	2800	1952
2½	2240	2477
3	1500	2172
4	580	1236
6	400	1502
8	280	1629

PIPE SIZE	FEET PER PALLET	WT. PER PALLET SCH-80
½	5200	1073
¾	4400	1233
1	5200	2144
1¼	4000	2282
1½	2360	1633
2	1860	1784
2½	1160	1696
3	1500	2938
4	580	1660
6	360	1968
8	280	2325

NSF

CRESLINE-NORTHWEST, LLC.
CORPORATE HEADQUARTERS: 600 CROSS POINTE BOULEVARD · EVANSVILLE, IN 47715 · TELEPHONE (812) 428-9300
PLANT: 223 MAURIN ROAD · CHEHALIS, WA 98532 · TELEPHONE (360) 740-0708
www.cresline-northwest.com

CHARLOTTE
PIPE AND FOUNDRY COMPANY

Plastic Pipe and Fittings Pressure Systems
Suggested Short Form Specification

PVC Schedule 40 Pressure Pipe and Fitting System:

Pipe and fittings shall be manufactured from PVC compound with a cell class of 12454 per ASTM D 1784 and conform with National Sanitation Foundation (NSF) standards 14 and 61. Pipe shall be iron pipe size (IPS) conforming to ASTM D 1785. Fittings shall conform to ASTM D 2466.

All pipe and fittings to be produced by a single manufacturer and to be installed in accordance with manufacturer's recommendations and local code requirements. Buried pipe shall be installed in accordance with ASTM F 1668. Solvent cements shall conform to ASTM D 2564. Primer shall conform to ASTM F 656. The system to be manufactured by Charlotte Pipe and Foundry Company and is intended for pressure applications where the temperature will not exceed 140°F.

PVC SDR Pressure Pipe and Schedule 40 Fitting System:

Pipe and fittings shall be manufactured from PVC compound with a cell class of 12454 per ASTM D 1784 and conform with National Sanitation Foundation (NSF) standards 14 and 61. Pipe shall be iron pipe size (IPS) conforming to ASTM D 2241 for plain-end pipe and ASTM D 2672 for belled-end pipe. PVC Schedule 40 fittings shall conform to ASTM D 2466.

All pipe and fittings to be produced by a single manufacturer and to be installed in accordance with manufacturer's recommendations and local code requirements. Buried pipe shall be installed in accordance with ASTM F 1668. Solvent cements shall conform to ASTM D 2564. Primer shall conform to ASTM F 656. The system to be manufactured by Charlotte Pipe and Foundry Company and is intended for pressure applications where the temperature will not exceed 140°F.

PVC Schedule 80 Pressure Pipe and Fitting System:

Pipe and fittings shall be manufactured from PVC compound with a cell class of 12454 per ASTM D 1784 and conform with National Sanitation Foundation (NSF) standards 14 and 61. Pipe shall be iron pipe size (IPS) conforming to ASTM D 1785. Socket fittings shall conform to ASTM D 2467; threaded fittings shall conform to ASTM D 2464 or D 2467. Flanges shall be 150# type per ANSI/ASM E B 16.5.

All pipe and fittings to be produced by a single manufacturer and to be installed in accordance with manufacturer's recommendations and local code requirements. Buried pipe shall be installed in accordance with ASTM F 1668. Solvent cements shall conform to ASTM D 2564. Primer shall conform to ASTM F 656. The system to be manufactured by Charlotte Pipe and Foundry Company and is intended for pressure applications where the temperature will not exceed 140°F.

Corzan® CPVC Schedule 80 Pressure Pipe and Fitting System:

Pipe and fittings shall be manufactured from CPVC compound with a cell class of 24448 for pipe and 23447 for fittings per ASTM D 1784 and conform with National Sanitation Foundation (NSF) standards 14 and 61. Schedule 80 pipe shall be iron pipe size (IPS) conforming to ASTM F 441. Schedule 80 socket fittings shall conform to ASTM F 439; threaded fittings shall conform to ASTM F 437 or F 439. Flanges shall be 150# type per ANSI/ASME B 16.5.

All pipe and fittings to be produced by a single manufacturer and to be installed in accordance with manufacturer's recommendations and local code requirements. Buried pipe shall be installed in accordance with ASTM F 1668. Solvent cements shall conform to ASTM F 493. Primer shall conform to ASTM F 656. The system to be manufactured by Charlotte Pipe and Foundry Company and is intended for pressure applications where the temperature will not exceed 200°F.

Corzan is a registered trademark of The Lubrizol Corp.

(908)

PO Box 35430 Charlotte, NC 28235 USA 704/372-5030 800/438-6091 FAX 800/553-1605
www.charlottepipe.com

EMPIREWEST

CERTIFICATE OF COMPLIANCE TO STANDARDS

- Flanged pipe are manufactured in accordance with AWWA/ANSI C115/A21.15 and ANSI B 16.1
- Pipe are manufactured in accordance with ANSI/AWWA C151/A21.51
- Pipe grooved depth dimension is manufactured in accordance with all applicable requirements of ANSI/AWWA C606
- Pipe and fitting interiors coated with asphalt are in accordance with NSF/ANSI 61 – Drinking Water System Components – Health Effects
- Pipe and fittings required cement linings are manufactured in accordance with the requirements of ANSI/AWWA C104/A21.4
- The exterior of pipe is coated in accordance with ANSI/AWWA C151/A21.51
- Flanged pipe are available to meet "Buy America/n" standards, when necessary. Certificates from suppliers available upon request

Certification Data

Valve Catalog No. 90G-01ASVKC Quantity 1

Description PRESSURE REDUCING VALVE

Company MT WATERWORKS

Contact DUSTIN DENNISON

Address

Date 7/17/14 Job Number

Job Name SAND COULEE WATER

Engineering Firm

Project Engineer

Control Valve Specifications

Valve Pattern

☒ Globe ☐ Angle

Main Valve Body & Cover

☒ Ductile Iron ASTM A-536
☐ Steel ASTM A216-WCB
☐ Bronze ASTM B62
☐ Aluminum 356T6
☐ Aluminum Bronze ASTM B-148
☐

Main Valve Trim

☐ Brass QQ-B-626 ☒ Bronze ASTM B61
☐ Monel QQ-N-288 ☐ Stainless Steel
☐

Pilots and Solenoids

☒ CRD ☐
☐ ☐
☐

Pilot Systems Materials

☒ Bronze/Stainless Steel ☐ Aluminum
☐ Stainless Steel ☐ Steel
☐

Pilot Spring Range, Voltage, etc.

☒ 30 - 300 PSI
☐
☐

Rubber Parts

☒ Buna N® Synthetic Rubber
☒ Temp. Range 180°
☐

Tubing & Fittings

☒ Copper&Brass ☐ Steel
☐ Stainless Steel
☐

Features

☒ Strainer (s) ☐ Check Feature
☐ Pilot System Shutoff Cocks
☒ Opening Speed Control
☐ Closing Speed Control
☐ Delrin Sleeve Stem (Main Valve)
☐ Micro Switch Assembly
☒ Valve Position Indicator
☐

Epoxy Coating
(6 - 8 mil Fusion Bonded)

☐ Internal ☐ External ☒ Both

End Details Flanged

☐ Ductile Iron ANSI B16.42 150A
☐ Ductile Iron ANSI B16.42 300F
☐ Steel ANSI B16.5 150F
☐ Steel ANSI B16.5 300F
☐ Bronze ANSI B16.24 150F
☐ Bronze ANSI B16.24 300F
☐ Aluminum ANSI B16.1 150 A (Dim. only)
☐

Note:
☐ F - Supplied per spec.
☐ A - Rated per spec. supplied flat faced

End Details Screwed

☒ 250 & 300 ANSI B2.1

Pressure Ratings

☐ 150 Class @ _____ psi Max.
☐ 250 Class @ _____ psi Max.
☐ 300 Class @ _____ psi Max.
☐

Special Notes:

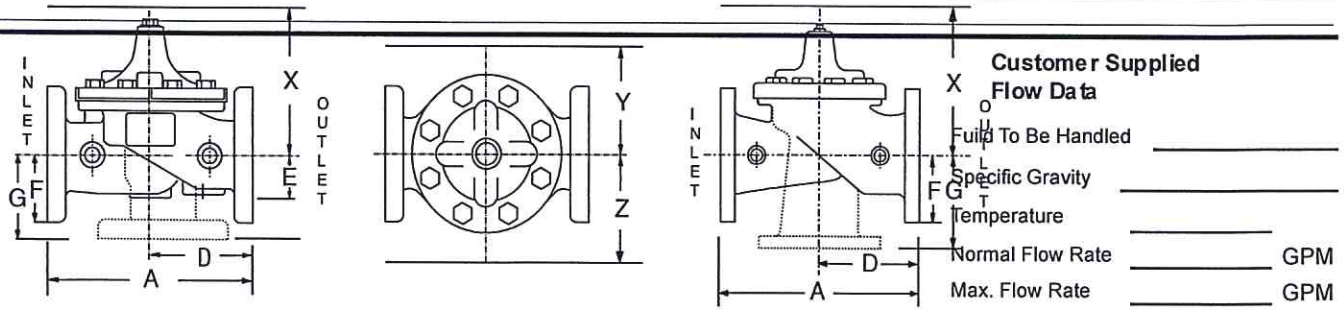

Customer Supplied Flow Data

Fluid To Be Handled
Specific Gravity
Temperature
Normal Flow Rate GPM
Max. Flow Rate GPM
Min. Flow Rate GPM

We Recommend providing adequate space around valve for maintenance work and pilot system dimensions.

Valve Size	Dimensions including pilot control systems								SPECIFICATION REFERENCE
	A	D	E	F	G	X	Y	Z	
1.5"									

Certified by GC SYSTEMS, INC Phone No. 800-525-9425

1 1/2" 90G-10ASVKC

90-01
(Full Internal Port)
—MODEL—

Pressure Reducing Valve

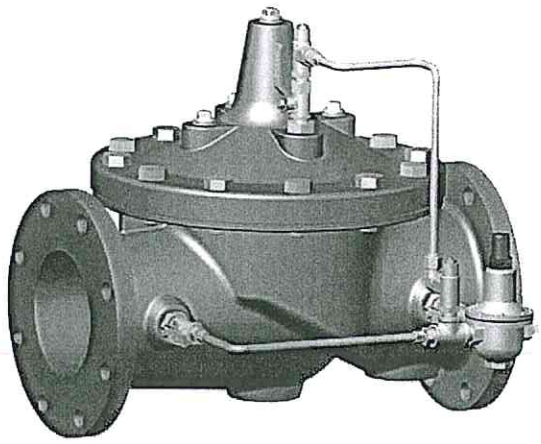

- **Sensitive and Accurate Pressure Control**
- **Easy Adjustment and Maintenance**
- **Tamper Resistant**
- **Optional Check Feature**
- **Fully Supported Frictionless Diaphragm**

The Cla-Val Model 90-01/~~690-01~~ Pressure Reducing Valve automatically reduces a higher inlet pressure to a steady lower downstream pressure, regardless of changing flow rate and/or varying inlet pressure. This valve is an accurate, pilot-operated regulator capable of holding downstream pressure to a pre-determined limit. When downstream pressure exceeds the pressure setting of the control pilot, the main valve and pilot valve close drip-tight.

If a check feature is added, and a pressure reversal occurs, the downstream pressure is admitted in the main valve cover chamber, closing the valve to prevent return flow.

Schematic Diagram

Item	Description
1	Hytrol (Main Valve)
2	X58 Restriction Fitting
3	CRD Pressure Reducing Control

Optional Features

KC=EPOXY LINED AND COATED

Item	Description
A	X46A Flow Clean Strainer
B	CK2 (Isolation Valve)
C	CV Flow Control (Closing)*
D	Check Valves with Isolation Valve
P	X141 Pressure Gauge
S	CV Flow Control (Opening)
V	X101 Valve Position Indicator
Y	X43 "Y" Strainer

*The closing speed control (optional) on this valve should always be open at least three (3) turns off its seat.

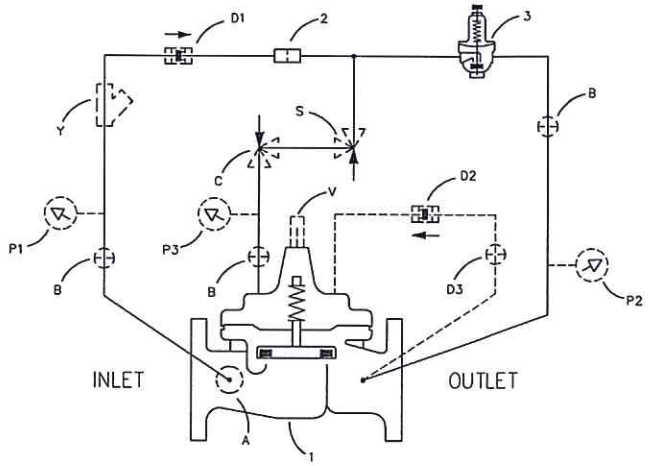

Typical Applications

Typical applications include pressure reducing valve station using Model 90-01BY/690-01BY and Model 90-01AS/690-01AS in parallel to handle wide range of flow rates. Larger Model 90-01BY/690-01BY valve meets requirements of peak loads and smaller Model 90-01AS/690-01AS handles low flows.

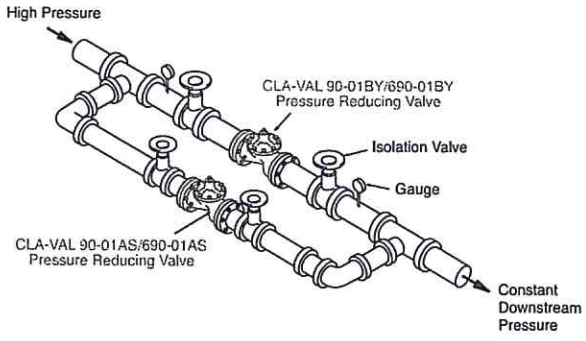

Cla-Val Model 90-01KO/690-01KO Pressure Reducing Valve with Anti-Cavitation Trim provides for optimum downstream pressure control while reducing noise and eliminating damage associated with cavitation.

See Cavitation Guide to determine if the valve is a candidate for the KO Anti-Cavitation Trim.

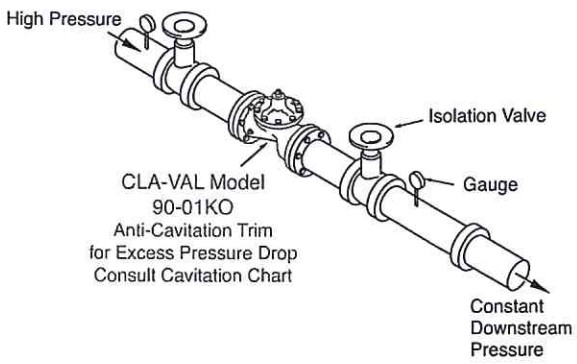

Model 90-01 (Uses Basic Valve Model 100-01)

Pressure Ratings (Recommended Maximum Pressure - psi)

Valve Body & Cover		Pressure Class				
		Flanged			Grooved	Threaded
Grade	Material	ANSI Standards*	150 Class	300 Class	300 Class	End‡ Details
ASTM A536	Ductile Iron	B16.42	250	400	400	400
ASTM A216-WCB	Cast Steel	B16.5	285	400	400	400
ASTM B62	Bronze	B16.24	225	400	400	400

Note: * ANSI standards are for flange dimensions only.
Flanged valves are available faced but not drilled.
‡ End Details machined to ANSI B2.1 specifications.
Valves for higher pressure are available; consult factory for details

Materials

Component	Standard Material Combinations		
Body & Cover	Ductile Iron	Cast Steel	Bronze
Available Sizes	1" - 36"	1" - 16"	1" - 16"
Disc Retainer & Diaphragm Washer	Cast Iron	Cast Steel	Bronze
Trim: Disc Guide, Seat & Cover Bearing	Bronze is Standard ~~Stainless Steel is Optional~~		
Disc	Buna-N® Rubber		
Diaphragm	Nylon Reinforced Buna-N® Rubber		
Stem, Nut & Spring	Stainless Steel		

For material options not listed, consult factory.
Cla-Val manufactures valves in more than 50 different alloys.

Dimensions (In inches)

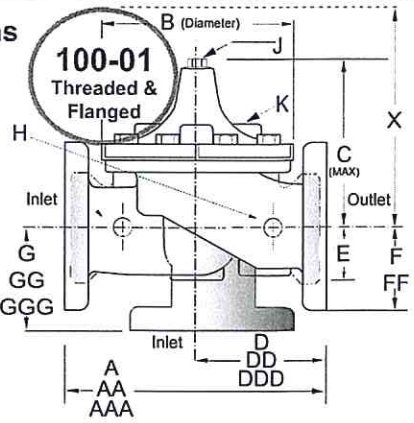

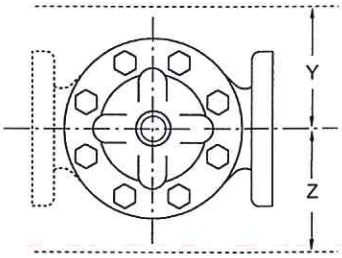

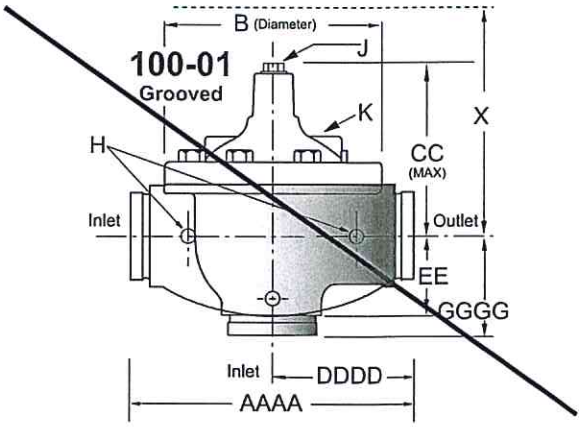

Model 90-01 Dimensions (In Inches)

Valve Size (Inches)	1	1 1/4	1 1/2	2	2 1/2	3	4	6	8	10	12	14	16	18	20	24	30	36
A Threaded	7.25	7.25	7.25	9.38	11.00	12.50	—	—	—	—	—	—	—	—	—	—	—	—
AA 150 ANSI	—	—	8.50	9.38	11.00	12.00	15.00	20.00	25.38	29.75	34.00	39.00	41.38	46.00	52.00	61.50	63.00	76.00
AAA 300 ANSI	—	—	9.00	10.00	11.62	13.25	15.62	21.00	26.38	31.12	35.50	40.50	43.50	47.64	53.62	63.24	64.50	76.00
AAAA Grooved End	—	—	8.50	9.00	11.00	12.50	15.00	20.00	25.38	—	—	—	—	—	—	—	—	—
B Dia.	5.62	5.62	5.62	6.62	8.00	9.12	11.50	15.75	20.00	23.62	28.00	32.75	35.50	41.50	45.00	53.16	56.00	66.00
C Max.	5.50	5.50	5.50	6.50	7.56	8.19	10.62	13.38	16.00	17.12	20.88	24.19	25.00	39.06	41.90	43.93	54.60	61.50
CC Max. Grooved End	—	—	4.75	5.75	6.88	7.25	9.31	12.12	14.62	—	—	—	—	—	—	—	—	—
D Threaded	3.25	3.25	3.25	4.75	5.50	6.25	—	—	—	—	—	—	—	—	—	—	—	—
DD 150 ANSI	—	—	4.00	4.75	5.50	6.00	7.50	10.00	12.69	14.88	17.00	19.50	20.81	—	—	30.75	—	—
DDD 300 ANSI	—	—	4.25	5.00	5.88	6.38	7.88	10.50	13.25	15.56	17.75	20.25	21.62	—	—	31.62	—	—
DDDD Grooved End	—	—	—	4.75	—	6.00	7.50	—	—	—	—	—	—	—	—	—	—	—
E	1.12	1.12	1.12	1.50	1.69	2.06	3.19	4.31	5.31	9.25	10.75	12.62	15.50	12.95	15.00	17.75	21.31	24.56
EE Grooved End	—	—	2.00	2.50	2.88	3.12	4.25	6.00	7.56	—	—	—	—	—	—	—	—	—
F 150 ANSI	—	—	2.50	3.00	3.50	3.75	4.50	5.50	6.75	8.00	9.50	10.50	11.75	15.00	16.50	19.25	22.50	25.60
FF 300 ANSI	—	—	3.06	3.25	3.75	4.13	5.00	6.25	7.50	8.75	10.25	11.50	12.75	15.00	16.50	19.25	24.00	25.60
G Threaded	1.88	1.88	1.88	3.25	4.00	4.50	—	—	—	—	—	—	—	—	—	—	—	—
GG 150 ANSI	—	—	4.00	3.25	4.00	4.00	5.00	6.00	8.00	8.62	13.75	14.88	15.69	—	—	22.06	—	—
GGG 300 ANSI	—	—	4.25	3.50	4.31	4.38	5.31	6.50	8.50	9.31	14.50	15.62	16.50	—	—	22.90	—	—
GGGG Grooved End	—	—	—	3.25	—	4.25	5.00	—	—	—	—	—	—	—	—	—	—	—
H NPT Body Tapping	.375	.375	.375	.375	.50	.50	.75	.75	1	1	1	1	1	1	1	1	2	2
J NPT Cover Center Plug	.25	.25	.25	.50	.50	.50	.75	.75	1	1	1.25	1.5	2	1.5	1.5	1.5	2	2
K NPT Cover Tapping	.375	.375	.375	.375	.50	.50	.75	.75	1	1	1	1	1	1	1	1	2	2
Stem Travel	0.4	0.4	0.4	0.6	0.7	0.8	1.1	1.7	2.3	2.8	3.4	4.0	4.5	5.1	5.63	6.75	7.5	8.5
Approx. Ship Wt. Lbs.	15	15	15	35	50	70	140	285	500	780	1165	1600	2265	2982	3900	6200	7703	11720
X Pilot System	11	11	11	13	14	15	17	29	31	33	36	40	40	43	47	68	79	85
Y Pilot System	9	9	9	9	10	11	12	20	22	24	26	29	30	32	34	39	40	45
Z Pilot System	9	9	9	9	10	11	12	20	22	24	26	29	30	32	34	39	42	47

Note: The top two flange holes on valve size 36 are threaded to 1 1/2"-6 UNC.

90-01 Valve Selection	100-01 Pattern: Globe (G), Angle (A), End Connections: Threaded (T), Grooved (GR), Flanged (F) Indicate Available Sizes																		
	Inches	1	1¼	1½	2	2½	3	4	6	8	10	12	14	16	18	20	24	30	36
	mm	25	32	40	50	65	80	100	150	200	250	300	350	400	450	500	600	750	900
Basic Valve 100-01	Pattern	G, A	G, A	G, A	G, A	G, A	G, A	G, A	G, A	G, A	G, A	G, A	G, A	G, A	G	G	G, A	G	G
	End Detail	T	T	T, F, Gr*	T, F, Gr	T, F, Gr*	T, F, Gr	F, Gr	F, Gr*	F, Gr*	F	F	F	F	F	F	F	F	F
Suggested Flow (gpm)	Maximum	55	93	125	210	300	460	800	1800	3100	4900	7000	8400	11000	14000	17000	25000	42000	50000
	Maximum Intermittent	68	120	160	260	370	580	990	2250	3900	6150	8720	10540	13700	17500	21700	31300	48000	62500
	Minimum	1	1	1	1	2	2	4	10	15	35	50	70	95	120	150	275	450	650
Suggested Flow (Liters/Sec)	Maximum	3.5	6	8	13	19	29	50	113	195	309	442	530	694	883	1073	1577	2650	3150
	Maximum Intermittent	4.3	7.6	10	16	23	37	62	142	246	387	549	664	863	1104	1369	1972	3028	3940
	Minimum	.03	.03	.03	.06	.09	0.13	0.25	0.63	0.95	2.2	3.2	4.4	6.0	7.6	9.5	17.4	28.4	41.0

100-01 Series is the full internal port Hytrol. **For Lower Flows Consult Factory** *Globe Grooved Only

Many factors should be considered in sizing pressure reducing valves including inlet pressure, outlet pressure and flow rates.
For sizing questions or cavitation analysis, consult Cla-Val with system details.

Pilot System Specifications

Adjustment Ranges

2	to	30 psi
15	to	75 psi
20	to	105 psi
30	to	300 psi*

*Supplied unless otherwise specified
Other ranges available, please consult factory

Temperature Range

Water: to 180°F

Materials

Standard Pilot System Materials
Pilot Control: Bronze ASTM B62
Trim: Stainless Steel Type 303
Rubber: Buna-N® Synthetic Rubber

Optional Pilot System Materials
Pilot Systems are available with optional Aluminum, Stainless Steel or Monel materials.

Note: Available with remote sensing control.

When Ordering, Please Specify

1. Catalog No. 90-01 or No. 690-01
2. Valve Size
3. Pattern - Globe or Angle
4. Pressure Class
5. Threaded, Flanged or Grooved
6. Trim Material
7. Adjustment Range
8. Desired Options
9. When Vertically Installed
10. Product Enhancements

CLA-VAL P.O. Box 1325 • Newport Beach, CA 92659-0325 • Phone: 949-722-4800 • Fax: 949-548-5441 • E-mail: claval@cla-val.com • Website cla-val.com
©Copyright Cla-Val 2011 Printed in USA Specifications subject to change without notice.

CLA-VAL™

— MODEL — **X101**

Valve Position Indicator & Pilot System Components

- **Positive Visual Indicator**
- **Frictionless**
- **Leak Proof**
- **Easy Maintenance and Cleaning**
- **Protected Indicator Rod**

The Cla-Val Model X101 Visual Position Indicator is designed to display Cla-Val valve position quickly and easily. A solid brass indicator rod fastened directly to the valve stem moves up and down inside a pyrex tube. The tube is contained within a brass housing which is open on two opposite sides to permit clear vision of the indicator rod.

To purge air that may be trapped in the valve cover, a vent valve in the top of the housing is provided. Model X101 valve position indicator is furnished complete for installation on specified size Cla-Val Automatic Control Valve.

Dimensions

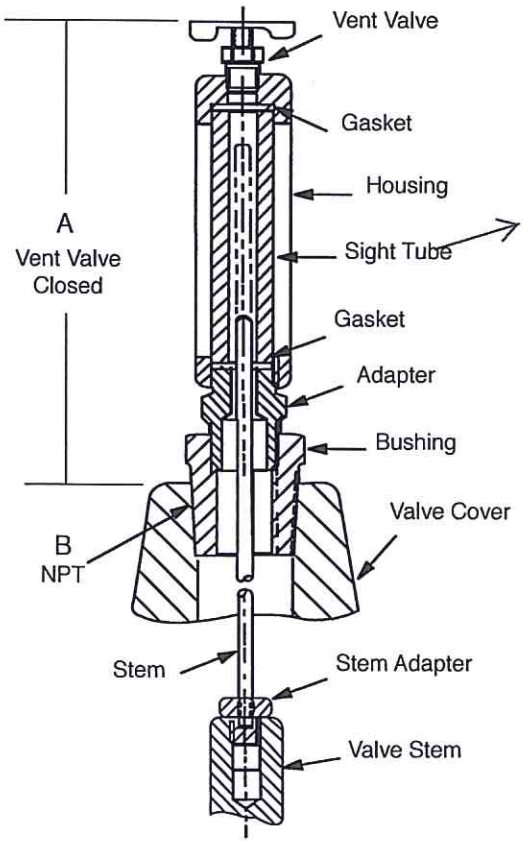

VALVE SIZE	A INCHES	B NPT
1"	5.88	1/4"
1 1/4"	3.21	1/4"
1 1/2"	3.21	1/4"
2"	3.33	1/2"
2 1/2"	3.33	1/2"
3"	3.33	1/2"
4"	4.52	3/4"
6"	4.52	3/4"
8"	5.83	1"
10"	7.70	1"
12"	8.20	1 1/4"
14"	8.20	1 1/2"
16"	10.81	2"
24"	12.04	1"

Dimension "A" is height added to valve by indicator assembly

Specifications

Sizes:	1" thru 24"
Materials:	Brass, Pyrex Tube
Pressure Rating:	400 psi
Optional Material:	Stainless Steel

Installation

Can be installed on any Cla-Val basic main valve in a few minutes. Simply replace the fitting on top of the valve cover with the indicator assembly.

When Ordering, Please Specify

1. Valve Size
2. Catalog No. X101
3. Valve Series No. (Appears on Valve Nameplate)
4. Optional Material
   Stainless Steel

CLA-VAL™

Certification Data

Valve Catalog No. 690G-01BVYKC Quantity 1

Description REDUCED PORT PRESSURE REDUCING VALVE

Company MT WATERWORKS

Contact DUSTIN DENNISON

Address

Date 7/17/14 Job Number

Job Name SAND COULEE WATER

Engineering Firm

Project Engineer

Control Valve Specifications

Valve Pattern

☒ Globe ☐ Angle

Main Valve Body & Cover

☒ Ductile Iron ASTM A-536
☐ Steel ASTM A216-WCB
☐ Bronze ASTM B62
☐ Aluminum 356T6
☐ Aluminum Bronze ASTM B-148
☐

Main Valve Trim

☐ Brass QQ-B-626 ☒ Bronze ASTM B61
☐ Monel QQ-N-288 ☐ Stainless Steel
☐

Pilots and Solenoids

☒ CRD ☐
☐ ☐
☐

Pilot Systems Materials

☒ Bronze/Stainless Steel ☐ Aluminum
☐ Stainless Steel ☐ Steel
☐

Pilot Spring Range, Voltage, etc.

☒ 30 - 300 PSI
☐
☐

Rubber Parts

☒ Buna N® Synthetic Rubber
☒ Temp. Range 180°
☐

Tubing & Fittings

☒ Copper&Brass ☐ Steel
☐ Stainless Steel
☐

Features

☒ Strainer (s) ☐ Check Feature
☒ Pilot System Shutoff Cocks
☐ Opening Speed Control
☐ Closing Speed Control
☐ Delrin Sleeve Stem (Main Valve)
☐ Micro Switch Assembly
☒ Valve Position Indicator
☐

Epoxy Coating
(6 - 8 mil Fusion Bonded)

☐ Internal ☐ External ☒ Both

End Details Flanged

☒ Ductile Iron ANSI B16.42 150A
☐ Ductile Iron ANSI B16.42 300F
☐ Steel ANSI B16.5 150F
☐ Steel ANSI B16.5 300F
☐ Bronze ANSI B16.24 150F
☐ Bronze ANSI B16.24 300F
☐ Aluminum ANSI B16.1 150 A (Dim. only)
☐

Note:
☐ F - Supplied per spec.
☐ A - Rated per spec. supplied flat faced

End Details Screwed

☐ 250 & 300 ANSI B2.1

Pressure Ratings

☒ 150 Class @ 250 psi Max.
☐ 250 Class @ psi Max.
☐ 300 Class @ psi Max.
☐

Special Notes:

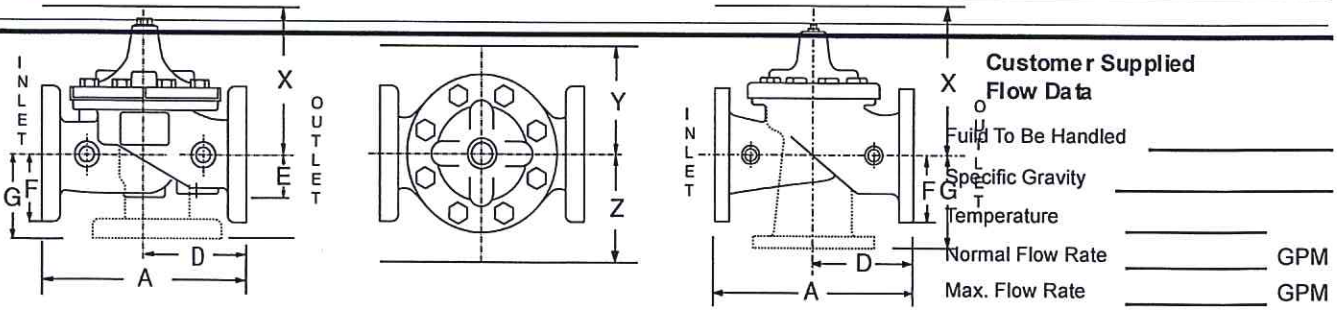

Customer Supplied Flow Data

Fluid To Be Handled
Specific Gravity
Temperature
Normal Flow Rate GPM
Max. Flow Rate GPM
Min. Flow Rate GPM

We Recommend providing adequate space around valve for maintenance work and pilot system dimensions.

Valve Size	Dimensions including pilot control systems								SPECIFICATION REFERENCE
	A	D	E	F	G	X	Y	Z	
6"									

Certified by GC SYSTEMS, INC Phone No. 800-525-9425

6" 690G-01BVYKC

—MODEL—
690-01
(Reduced Internal Port)

Pressure Reducing Valve

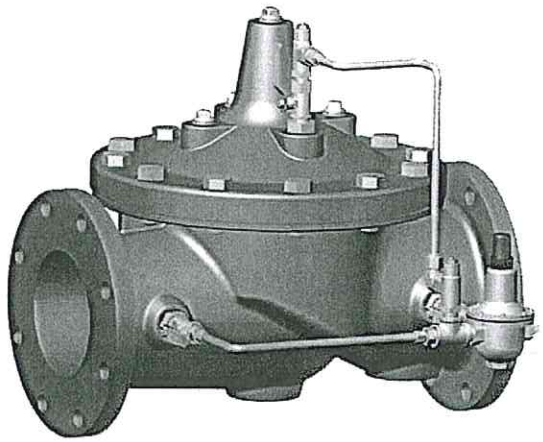

- **Sensitive and Accurate Pressure Control**
- **Easy Adjustment and Maintenance**
- **Tamper Resistant**
- **Optional Check Feature**
- **Fully Supported Frictionless Diaphragm**

The Cla-Val Model ~~90-01~~/690-01 Pressure Reducing Valve automatically reduces a higher inlet pressure to a steady lower downstream pressure, regardless of changing flow rate and/or varying inlet pressure. This valve is an accurate, pilot-operated regulator capable of holding downstream pressure to a pre-determined limit. When downstream pressure exceeds the pressure setting of the control pilot, the main valve and pilot valve close drip-tight.

If a check feature is added, and a pressure reversal occurs, the downstream pressure is admitted in the main valve cover chamber, closing the valve to prevent return flow.

Schematic Diagram

Item	Description
1	Hytrol (Main Valve)
2	X58 Restriction Fitting
3	CRD Pressure Reducing Control

Optional Features

KC=EPOXY LINED AND COATED

Item	Description
A	X46A Flow Clean Strainer
B	CK2 (Isolation Valve)
C	CV Flow Control (Closing)*
D	Check Valves with Isolation Valve
P	X141 Pressure Gauge
S	CV Flow Control (Opening)
V	X101 Valve Position Indicator
Y	X43 "Y" Strainer

*The closing speed control (optional) on this valve should always be open at least three (3) turns off its seat.

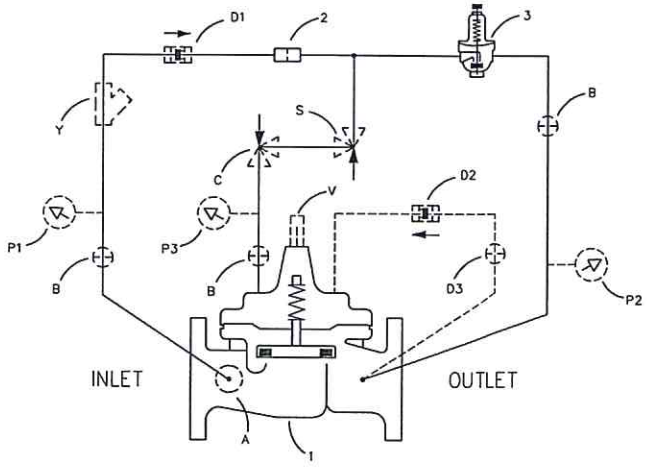

Typical Applications

Typical applications include pressure reducing valve station using Model 90-01BY/690-01BY and Model 90-01AS/690-01AS in parallel to handle wide range of flow rates. Larger Model 90-01BY/690-01BY valve meets requirements of peak loads and smaller Model 90-01AS/690-01AS handles low flows.

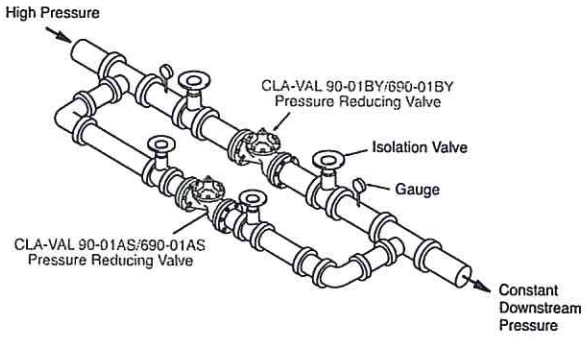

Cla-Val Model 90-01KO/690-01KO Pressure Reducing Valve with Anti-Cavitation Trim provides for optimum downstream pressure control while reducing noise and eliminating damage associated with cavitation.

See Cavitation Guide to determine if the valve is a candidate for the KO Anti-Cavitation Trim.

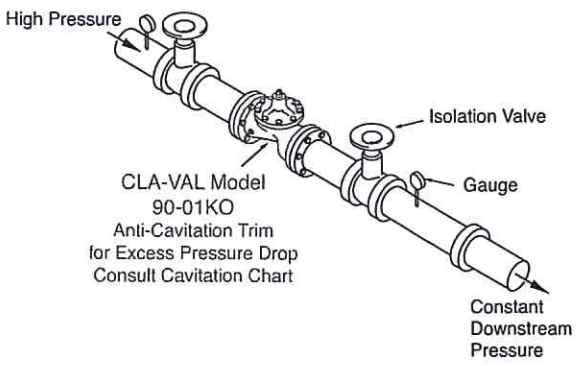

Model 690-01 (Uses Basic Valve Model 100-20)

Pressure Ratings (Recommended Maximum Pressure - psi)

Valve Body & Cover		Pressure Class		
		Flanged		
Grade	Material	ANSI Standards*	150 Class	300 Class
ASTM A536	Ductile Iron	B16.42	250	400
ASTM A216-WCB	Cast Steel	B16.5	285	400
ASTM B62	Bronze	B16.24	225	400

Note: * ANSI standards are for flange dimensions only.
Flanged valves are available faced but not drilled.
Valves for higher pressure are available; consult factory for details

Materials

Component	Standard Material Combinations		
Body & Cover	Ductile Iron	Cast Steel	Bronze
Available Sizes	3" - 48"	3" - 16"	3" - 16"
Disc Retainer & Diaphragm Washer	Cast Iron	Cast Steel	Bronze
Trim: Disc Guide, Seat & Cover Bearing	Bronze is Standard ~~Stainless Steel is Optional~~		
Disc	Buna-N® Rubber		
Diaphragm	Nylon Reinforced Buna-N® Rubber		
Stem, Nut & Spring	Stainless Steel		

For material options not listed, consult factory.
Cla-Val manufactures valves in more than 50 different alloys.

Dimensions
(In inches)

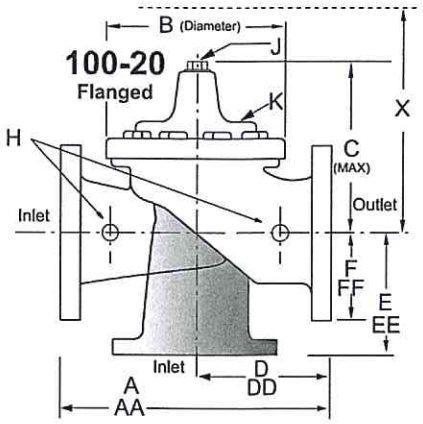

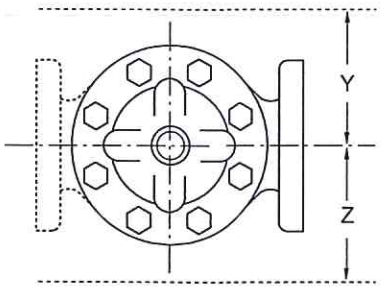

Model 690-01 Dimensions (In Inches)

Valve Size (Inches)	3	4	6	8	10	12	14	16	18	20	24	30	36	42	48
A 150 ANSI	10.25	13.88	17.75	21.38	26.00	30.00	34.25	35.00	42.12	48.00	48.00	63.25	65.00	76.00	94.50
AA 300 ANSI	11.00	14.50	18.62	22.38	27.38	31.50	35.75	36.62	43.63	49.62	49.75	63.75	67.00	76.00	94.50
B Dia.	6.62	9.12	11.50	15.75	20.00	23.62	27.47	28.00	35.44	35.44	35.44	53.19	56.00	66.00	66.00
C Max.	7.00	8.62	11.62	15.00	17.88	21.00	20.88	25.75	25.00	31.00	31.00	43.94	54.60	61.50	61.50
D 150 ANSI	—	6.94	8.88	10.69	CF*	CF*	CF*	CF*	CF*	CF*	CF*	—	—	—	—
DD 300 ANSI	—	7.25	9.38	11.19	CF*	CF*	CF*	CF*	CF*	CF*	CF*	—	—	—	—
E 150 ANSI	—	5.50	6.75	7.25	CF*	CF*	CF*	CF*	CF*	CF*	CF*	—	—	—	—
EE 300 ANSI	—	5.81	7.25	7.75	CF*	CF*	CF*	CF*	CF*	CF*	CF*	—	—	—	—
F 150 ANSI	3.75	4.50	5.50	6.75	8.00	9.50	11.00	11.75	15.88	14.56	17.00	19.88	25.50	28.00	31.50
FF 300 ANSI	4.12	5.00	6.25	7.50	8.75	10.25	11.50	12.75	15.88	16.06	19.00	22.00	27.50	28.00	31.50
H NPT Body Tapping	.375	.50	.75	.75	1	1	1	1	1	1	1	1	2	2	2
J NPT Cover Center Plug	.50	.50	.75	.75	1	1	1.25	1.25	2	2	2	2	2	2	2
K NPT Cover Tapping	.375	.50	.75	.75	1	1	1	1	1	1	1	1	2	2	2
Stem Travel	0.6	0.8	1.1	1.7	2.3	2.8	3.4	3.4	3.4	4.5	4.5	6.5	7.5	8.5	8.5
Approx. Ship Wt. Lbs.	45	85	195	330	625	900	1250	1380	2365	2551	2733	6500	8545	12450	13100
X Pilot System	13	15	27	30	33	36	36	41	40	46	55	68	79	85	86
Y Pilot System	10	11	18	20	22	24	26	26	30	30	30	39	40	45	47
Z Pilot System	10	11	18	20	22	24	26	26	30	30	30	39	42	47	49

*Consult Factory

Note: The top two flange holes on valve sizes 36 thru 48 are threaded to 1 1/2"-6 UNC.

690-01 Valve Selection	100-20 Pattern: Globe (G), Angle (A), End Connections: Flanged (F) Indicate Available Sizes															
	Inches	3	4	6	8	10	12	14	16	18	20	24	30	36	42	48
	mm	80	100	150	200	250	300	350	400	450	500	600	750	900	1000	1200
Basic Valve 100-20	Pattern	G	G, A	G, A	G, A	G	G	G	G	G	G	G	G	G	G	G
	End Detail	F	F	F	F	F	F	F	F	F	F	F	F	F	F	F
Suggested Flow (gpm)	Maximum	260	580	1025	2300	4100	6400	9230	9230	16500	16500	16500	28000	33500	33500	33500
	Minimum	1	2	4	10	15	35	50	50	95	95	95	275	450	450	450
Suggested Flow (Liters/Sec)	Maximum	16	37	65	145	258	403	581	581	1040	1040	1040	1764	2115	2115	2115
	Minimum	.06	.13	.25	.63	.95	2.2	3.2	3.2	6.0	6.0	6.0	17.4	28.4	41.0	41.0

100-20 Series is the reduced internal port size version of the 100-01 Series. **For Lower Flows Consult Factory**

Many factors should be considered in sizing pressure reducing valves including inlet pressure, outlet pressure and flow rates.
For sizing questions or cavitation analysis, consult Cla-Val with system details.

Pilot System Specifications

Adjustment Ranges

2	to	30 psi
15	to	75 psi
20	to	105 psi
30	to	300 psi*

*Supplied unless otherwise specified
Other ranges available, please consult factory

Temperature Range

Water: to 180°F

Materials

Standard Pilot System Materials
Pilot Control: Bronze ASTM B62
Trim: Stainless Steel Type 303
Rubber: Buna-N® Synthetic Rubber

Optional Pilot System Materials
Pilot Systems are available with optional Aluminum, Stainless Steel or Monel materials.

Note: Available with remote sensing control.

When Ordering, Please Specify

1. Catalog No. 90-01 or No. 690-01
2. Valve Size
3. Pattern - Globe or Angle
4. Pressure Class
5. Threaded, Flanged or Grooved
6. Trim Material
7. Adjustment Range
8. Desired Options
9. When Vertically Installed
10. Product Enhancements

CLA-VAL P.O. Box 1325 • Newport Beach, CA 92659-0325 • Phone: 949-722-4800 • Fax: 949-548-5441 • E-mail: claval@cla-val.com • Website cla-val.com
©Copyright Cla-Val 2011 Printed in USA Specifications subject to change without notice.

CLA-VAL™

— MODEL — **X101**

Valve Position Indicator & Pilot System Components

- **Positive Visual Indicator**
- **Frictionless**
- **Leak Proof**
- **Easy Maintenance and Cleaning**
- **Protected Indicator Rod**

The Cla-Val Model X101 Visual Position Indicator is designed to display Cla-Val valve position quickly and easily. A solid brass indicator rod fastened directly to the valve stem moves up and down inside a pyrex tube. The tube is contained within a brass housing which is open on two opposite sides to permit clear vision of the indicator rod.

To purge air that may be trapped in the valve cover, a vent valve in the top of the housing is provided. Model X101 valve position indicator is furnished complete for installation on specified size Cla-Val Automatic Control Valve.

Dimensions

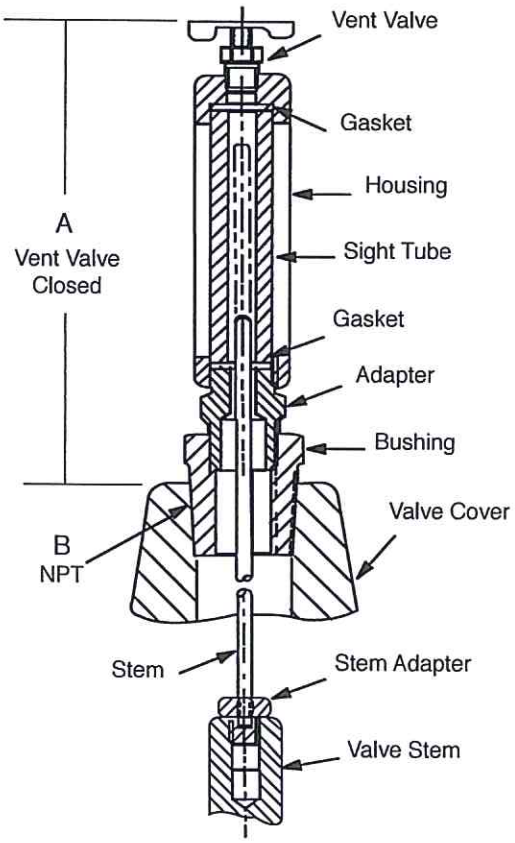

VALVE SIZE	A INCHES	B NPT
1"	5.88	1/4"
1 1/4"	3.21	1/4"
1 1/2"	3.21	1/4"
2"	3.33	1/2"
2 1/2"	3.33	1/2"
3"	3.33	1/2"
4"	4.52	3/4"
6"	4.52	3/4"
8"	5.83	1"
10"	7.70	1"
12"	8.20	1 1/4"
14"	8.20	1 1/2"
16"	10.81	2"
24"	12.04	1"

Dimension "A" is height added to valve by indicator assembly

Specifications

Sizes:	1" thru 24"
Materials:	Brass, Pyrex Tube
Pressure Rating:	400 psi
Optional Material:	Stainless Steel

Installation

Can be installed on any Cla-Val basic main valve in a few minutes. Simply replace the fitting on top of the valve cover with the indicator assembly.

When Ordering, Please Specify

1. Valve Size
2. Catalog No. X101
3. Valve Series No. (Appears on Valve Nameplate)
4. Optional Material
   Stainless Steel

CLA-VAL™

Certification Data

Valve Catalog No. 50G-01KC Quantity 1

Description PRESSURE RELIEF VALVE

Company MT WATERWORKS Date 7/17/14 Job Number

Contact DUSTIN DENNISON Job Name SAND COULEE WATER

Address Engineering Firm

Project Engineer

Control Valve Specifications

Valve Pattern

☒ Globe ☐ Angle

Main Valve Body & Cover

☒ Ductile Iron ASTM A-536
☐ Steel ASTM A216-WCB
☐ Bronze ASTM B62
☐ Aluminum 356T6
☐ Aluminum Bronze ASTM B-148
☐

Main Valve Trim

☐ Brass QQ-B-626 ☐ Bronze ASTM B61
☐ Monel QQ-N-288 ☒ Stainless Steel
☐

Pilots and Solenoids

☒ CRL ☐
☐ ☐
☐

Pilot Systems Materials

☒ Bronze/Stainless Steel ☐ Aluminum
☐ Stainless Steel ☐ Steel
☐

Pilot Spring Range, Voltage, etc.

☒ 20 - 200 PSI
☐
☐

Rubber Parts

☒ Buna N® Synthetic Rubber
☒ Temp. Range 180°
☐

Tubing & Fittings

☒ Copper&Brass ☐ Steel
☐ Stainless Steel
☐

Features

☒ Strainer (s) ☐ Check Feature
☒ Pilot System Shutoff Cocks
☐ Opening Speed Control
☒ Closing Speed Control
☐ Delrin Sleeve Stem (Main Valve)
☐ Micro Switch Assembly
☐ Valve Position Indicator
☐

Epoxy Coating
(6 - 8 mil Fusion Bonded)

☐ Internal ☐ External ☒ Both

End Details Flanged

☐ Ductile Iron ANSI B16.42 150A
☐ Ductile Iron ANSI B16.42 300F
☐ Steel ANSI B16.5 150F
☐ Steel ANSI B16.5 300F
☐ Bronze ANSI B16.24 150F
☐ Bronze ANSI B16.24 300F
☐ Aluminum ANSI B16.1 150 A (Dim. only)
☐

Note:
☐ F - Supplied per spec.
☐ A - Rated per spec. supplied flat faced

End Details Screwed

☒ 250 & 300 ANSI B2.1

Pressure Ratings

☐ 150 Class @ psi Max.
☐ 250 Class @ psi Max.
☐ 300 Class @ psi Max.
☐

Special Notes:

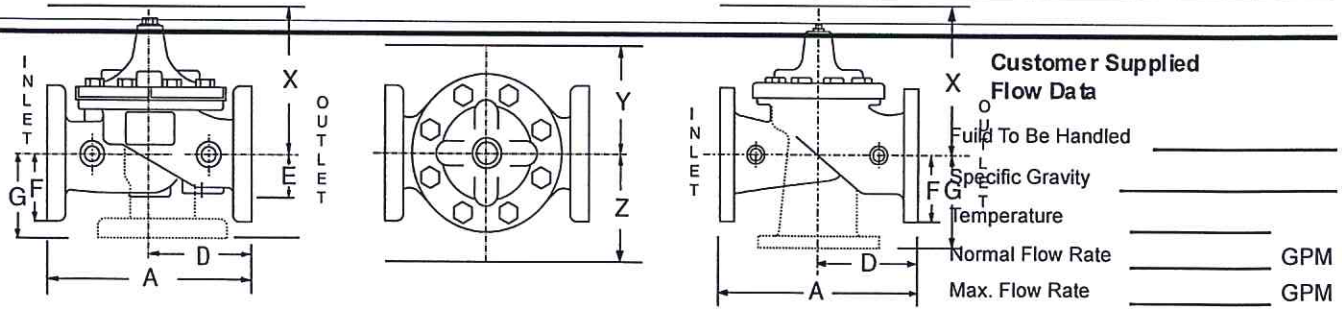

Customer Supplied Flow Data

Fluid To Be Handled
Specific Gravity
Temperature
Normal Flow Rate GPM
Max. Flow Rate GPM
Min. Flow Rate GPM

We Recommend providing adequate space around valve for maintenance work and pilot system dimensions.

Valve Size	Dimensions including pilot control systems								SPECIFICATION REFERENCE
	A	D	E	F	G	X	Y	Z	
2"									

Certified by GC SYSTEMS, INC Phone No. 800-525-9425

2" 50G-01KC

—MODEL— **50-01** (Full Internal Port)

Pressure Relief & Pressure Sustaining Valve

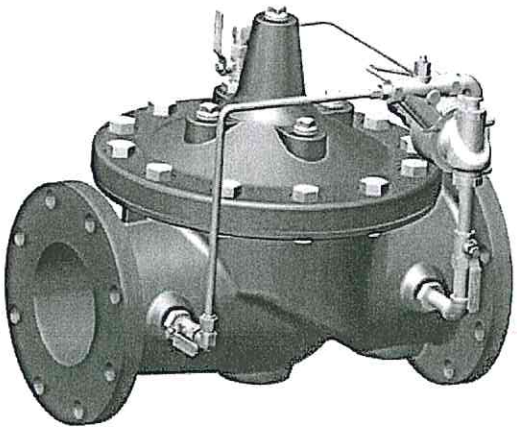

- **Accurate Pressure Control**
- **Optional Check Feature**
- **Fast Opening to Maintain Line Pressure**
- **Slow Closing to Prevents Surges**
- **Completely Automatic Operation**

The Cla-Val Model 50-01/~~650-01~~ Pressure Relief Valve is a hydraulically operated, pilot-controlled, modulating valve designed to maintain constant upstream pressure within close limits. This valve can be used for pressure relief, pressure sustaining, back pressure, or unloading functions in a by-pass system.

In operation, the valve is actuated by line pressure through a pilot control system, opening fast to maintain steady line pressure but closing gradually to prevent surges. Operation is completely automatic and pressure settings may be easily changed.

If a check feature is added, and a pressure reversal occurs, the downstream pressure is admitted into the main valve cover chamber, closing the valve to prevent return flow.

Schematic Diagram

Item Description

1 Hytrol (Main Valve)
2 X42N-2 Strainer & Needle Valve
3 CRL Pressure Relief Control

Optional Features

Item Description **KC=EPOXY LINED AND COATED**

B CK2 (Isolation Valve)
D Check Valves with Isolation Valve
F Remote Pilot Sensing
H Drain to Atmosphere
P X141 Pressure Gauge
S CV Speed Control (Opening)
V X101 Valve Position Indicator

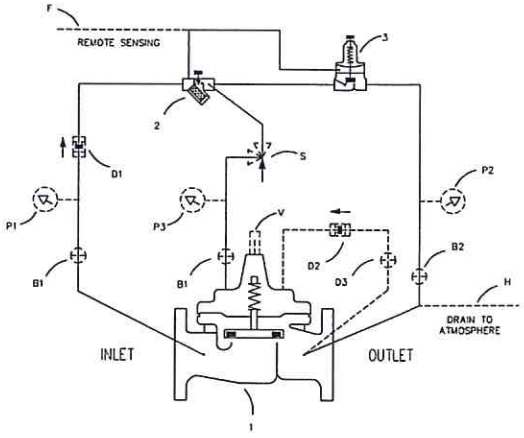

Typical Applications

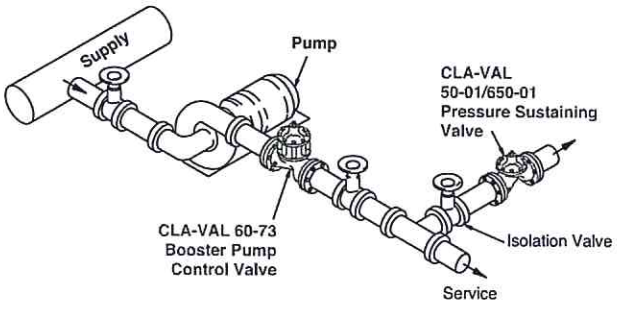

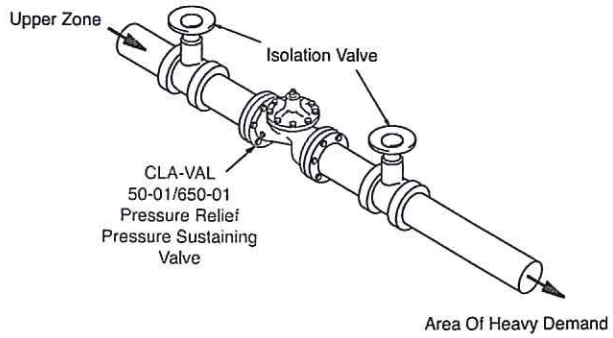

Pressure Relief Service

This fast opening, slow closing relief valve provides system protection against high pressure surges on pump start up and pump shut down by dissipating the excess pressure to a safe location.

Pressure Sustaining Service

When installed in a line between an upper zone and a lower area of heavy demand, the valve acts to maintain desired upstream pressure to prevent "robbing" of the upper zone. Water in excess of pressure setting is allowed to flow to an area of heavy demand, control is smooth, and pressure regulation is positive.

Model 50-01 (Uses Basic Valve Model 100-01)

Pressure Ratings (Recommended Maximum Pressure - psi)

Valve Body & Cover		Pressure Class				
		Flanged			Grooved	Threaded
Grade	Material	ANSI Standards*	150 Class	300 Class	300 Class	End‡ Details
ASTM A536	Ductile Iron	B16.42	250	400	400	400
ASTM A216-WCB	Cast Steel	B16.5	285	400	400	400
ASTM B62	Bronze	B16.24	225	400	400	400

Note: * ANSI standards are for flange dimensions only.
Flanged valves are available faced but not drilled.
‡ End Details machined to ANSI B2.1 specifications.
Valves for higher pressure are available; consult factory for details

Materials

Component	Standard Material Combinations		
Body & Cover	Ductile Iron	Cast Steel	Bronze
Available Sizes	1" - 36"	1" - 16"	1" - 16"
Disc Retainer & Diaphragm Washer	Cast Iron	Cast Steel	Bronze
Trim: Disc Guide, Seat & Cover Bearing	~~Bronze is Standard~~ Stainless Steel is ~~Optional~~		
Disc	Buna-N® Rubber		
Diaphragm	Nylon Reinforced Buna-N® Rubber		
Stem, Nut & Spring	Stainless Steel		

For material options not listed, consult factory.
Cla-Val manufactures valves in more than 50 different alloys.

Dimensions (In inches)

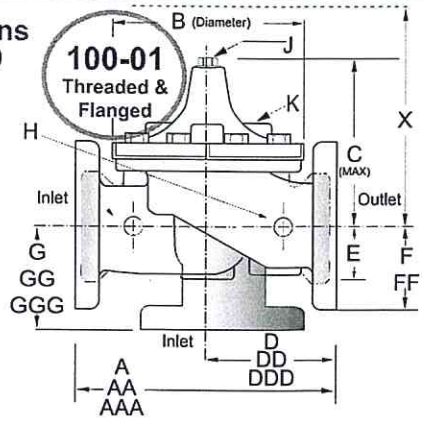

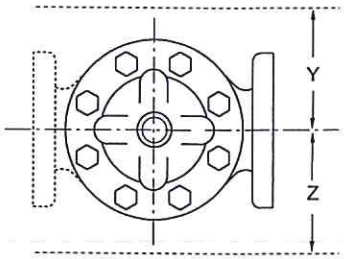

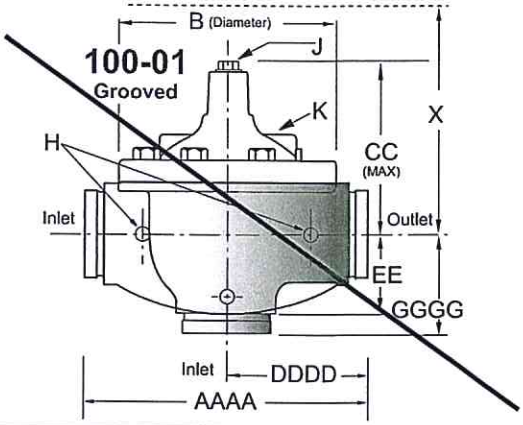

Model 50-01 Dimensions (In Inches)

Valve Size (Inches)	1	1 1/4	1 1/2	2	2 1/2	3	4	6	8	10	12	14	16	18	20	24	30	36
A Threaded	7.25	7.25	7.25	9.38	11.00	12.50	—	—	—	—	—	—	—	—	—	—	—	—
AA 150 ANSI	—	—	8.50	9.38	11.00	12.00	15.00	20.00	25.38	29.75	34.00	39.00	41.38	46.00	52.00	61.50	63.00	76.00
AAA 300 ANSI	—	—	9.00	10.00	11.62	13.25	15.62	21.00	26.38	31.12	35.50	40.50	43.50	47.64	53.62	63.24	64.50	76.00
AAAA Grooved End	—	—	8.50	9.00	11.00	12.50	15.00	20.00	25.38	—	—	—	—	—	—	—	—	—
B Dia.	5.62	5.62	5.62	6.62	8.00	9.12	11.50	15.75	20.00	23.62	28.00	32.75	35.50	41.50	45.00	53.16	56.00	66.00
C Max.	5.50	5.50	5.50	6.50	7.56	8.19	10.62	13.38	16.00	17.12	20.88	24.19	25.00	39.06	41.90	43.93	54.60	61.50
CC Max. Grooved End	—	—	4.75	5.75	6.88	7.25	9.31	12.12	14.62	—	—	—	—	—	—	—	—	—
D Threaded	3.25	3.25	3.25	4.75	5.50	6.25	—	—	—	—	—	—	—	—	—	—	—	—
DD 150 ANSI	—	—	4.00	4.75	5.50	6.00	7.50	10.00	12.69	14.88	17.00	19.50	20.81	—	—	30.75	—	—
DDD 300 ANSI	—	—	4.25	5.00	5.88	6.38	7.88	10.50	13.25	15.56	17.75	20.25	21.62	—	—	31.62	—	—
DDDD Grooved End	—	—	—	4.75	—	6.00	7.50	—	—	—	—	—	—	—	—	—	—	—
E	1.12	1.12	1.12	1.50	1.69	2.56	3.19	4.31	5.31	9.25	10.75	12.62	15.50	12.95	15.00	17.75	21.31	24.56
EE Grooved End	—	—	2.00	2.50	2.88	3.12	4.25	6.00	7.56	—	—	—	—	—	—	—	—	—
F 150 ANSI	—	—	2.50	3.00	3.50	3.75	4.50	5.50	6.75	8.00	9.50	10.50	11.75	15.00	16.50	19.25	22.50	25.60
FF 300 ANSI	—	—	3.06	3.25	3.75	4.13	5.00	6.25	7.50	8.75	10.25	11.50	12.75	15.00	16.50	19.25	24.00	25.60
G Threaded	1.88	1.88	1.88	3.25	4.00	4.50	—	—	—	—	—	—	—	—	—	—	—	—
GG 150 ANSI	—	—	4.00	3.25	4.00	4.00	5.00	6.00	8.00	8.62	13.75	14.88	15.69	—	—	22.06	—	—
GGG 300 ANSI	—	—	4.25	3.50	4.31	4.38	5.31	6.50	8.50	9.31	14.50	15.62	16.50	—	—	22.90	—	—
GGGG Grooved End	—	—	—	3.25	—	4.25	5.00	—	—	—	—	—	—	—	—	—	—	—
H NPT Body Tapping	.375	.375	.375	.375	.50	.50	.75	.75	1	1	1	1	1	1	1	1	2	2
J NPT Cover Center Plug	.25	.25	.25	.50	.50	.50	.75	.75	1	1	1.25	1.5	2	1.5	1.5	1.5	2	2
K NPT Cover Tapping	.375	.375	.375	.375	.50	.50	.75	.75	1	1	1	1	1	1	1	1	2	2
Stem Travel	0.4	0.4	0.4	0.6	0.7	0.8	1.1	1.7	2.3	2.8	3.4	4.0	4.5	5.1	5.63	6.75	7.5	8.5
Approx. Ship Wt. Lbs.	15	15	15	35	50	70	140	285	500	780	1165	1600	2265	2982	3900	6200	7703	11720
X Pilot System	11	11	11	13	14	15	17	29	31	33	36	40	40	43	47	68	79	85
Y Pilot System	9	9	9	9	10	11	12	20	22	24	26	29	30	32	34	39	40	45
Z Pilot System	9	9	9	9	10	11	12	20	22	24	26	29	30	32	34	39	42	47

Note: The top two flange holes on valve size 36 are threaded to 1 1/2"-6 UNC.

50-01 Valve Selection	100-01 Pattern: Globe (G), Angle (A), End Connections: Threaded (T), Grooved (GR), Flanged (F) Indicate Available Sizes																		
	Inches	1	1¼	1½	2	2½	3	4	6	8	10	12	14	16	18	20	24	30	36
	mm	25	32	40	50	65	80	100	150	200	250	300	350	400	450	500	600	750	900
Basic Valve 100-01	Pattern	G, A	G, A	G, A	G, A	G, A	G, A	G, A	G, A	G, A	G, A	G, A	G, A	G, A	G	G	G, A	G	G
	End Detail	T	T	T, F, Gr*	T, F, Gr	T, F, Gr*	T, F, Gr	F, Gr	F, Gr*	F, Gr*	F	F	F	F	F	F	F	F	F
Suggested Flow (gpm)	Maximum	55	93	125	210	300	460	800	1800	3100	4900	7000	8400	11000	14000	17000	25000	42000	50000
	Maximum Surge	120	210	280	470	670	1000	1800	4000	7000	11000	16000	19000	25000	31000	39000	56500	63000	85000
Suggested Flow (Liters/Sec)	Maximum	3.5	6	8	13	19	29	50	113	195	309	442	530	694	883	1073	1577	2650	3150
	Maximum Surge	7.6	13	18	30	42	63	113	252	441	693	1008	1197	1577	1956	2461	3560	3975	5360

100-01 Series is the full internal port Hytrol.

*Globe Grooved Only

Pilot System Specifications

Adjustment Ranges

0 to 75 psi Max.
20 to 105 psi
20 to 200 psi *
100 to 300 psi

*Supplied unless otherwise specified.
Other ranges available, please consult factory.

Temperature Range

Water: to 180°F

Materials

Standard Pilot System Materials

Pilot Control: Bronze ASTM B62
Trim: Stainless Steel Type 303
Rubber: Buna-N® Synthetic Rubber
Tubing & Fitting: Copper and Bronze

Optional Pilot System Materials

Pilot Systems are available with optional Aluminum, Stainless Steel or Monel materials.

When Ordering, Please Specify

1. Catalog No. 50-01 or No. 650-01
2. Valve Size
3. Pattern - Globe or Angle
4. Pressure Class
5. Threaded or Flanged
6. Trim Material
7. Adjustment Range
8. Desired Options
9. When Vertically Installed

CLA-VAL™

E-50-01/650-01 (R-1/2013)

CLA-VAL
PO Box 1325 Newport Beach CA 92659-0325
Phone: 949-722-4800 • Fax: 949-548-5441

CLA-VAL CANADA
4687 Christie Drive
Beamsville, Ontario
Canada L0R 1B4
Phone: 905-563-4963
Fax: 905-563-4040

CLA-VAL EUROPE
Chemin dés Mesanges 1
CH-1032 Romanel/
Lausanne, Switzerland
Phone: 41-21-643-15-55
Fax: 41-21-643-15-50

www.cla-val.com

©COPYRIGHT CLA-VAL 2013 Printed in USA
Specifications subject to change without notice.

Represented By:

Home Page

Products

Specifications

- S89 Flange Support
- **S92 Saddle Support**
- C92 Clamp Support
- S96 Flange Cradle Support
- TP Thrust Plates

Installation Guides

Distributors

Literature

CAD Drawings

Corporate Info

Contact Us

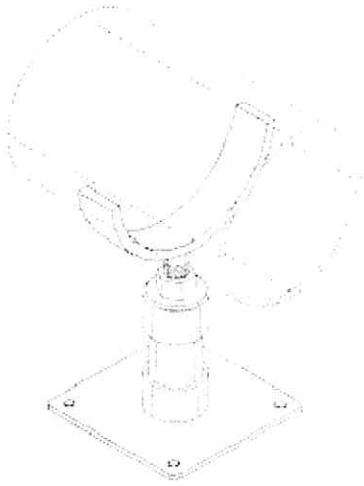

Standon Model S92 Adjustable Pipe Saddle Support

The "Standon" model **#S92** pipe support is specifically designed to fit ductile iron pipe. A nearly 50% circumferential cradle, and a pipe to saddle gap of less than .125" guarantees excellent performance. A neoprene liner is available for IPS size pipe for a perfect fit.

- Accepts standard IPS pipe - No threading required.
- Comes complete with over-sized anchorable base plate.
- Available in sizes 2" through 36".
- Also available in 100% 304 Stainless Steel.

MATERIAL

Saddle Strap:	ASTM A36
Collar/ Base Cups:	ASTM A53 D.O.M. tubing
Threaded Stud:	ASTM A36; rolled thread Grade ASTM A307
Base Plate:	ASTM A36 Sheet Steel - .25" plate
Optional Material:	100% 304 Stainless Steel

FABRICATION

All welds:	100% MIG welding, electrode E70XX
Saddles:	Formed to ductile iron radius.

FINISH

All pipe supports have a corrosion resistant, galvanized finish.

DIMENSIONS

SUPPORT SIZE	*PIPE O.D.*	*STRAP SIZE*	*THREAD STUD*	*BASE PLATE*	*EXTENSION PIPE REQ'D*	*MINIMUM DIST. TO FLOOR*
2"	2.5"	3/8" x 2"	1" x 6"	4"x6"x¼"	2" SCH. 40	7"
2½"	3"	3/8" x 2"	1" x 6"	4"x6"x¼"	2" SCH. 40	7"
3"	3.96"	3/8" x 2"	1" x 6"	4"x6"x¼"	2" SCH. 40	7"
4"	4.80"	½" x 2"	1" x 6"	8"x8"x¼"	2" SCH. 40	7"
6"	6.90"	½" x 2"	1" x 6"	8"x8"x¼"	2" SCH. 40	7"
8"	9.05"	½" x 2"	1" x 6"	8"x8"x¼"	2" SCH. 40	7"
10"	11.10"	½" x 2"	1" x 6"	8"x8"x¼"	2" SCH. 40	7"
12"	13.20"	½" x 2"	1" x 6"	8"x8"x¼"	2" SCH. 40	7"
14"	15.30"	5/8" x 3"	1½" x 6"	8"x8"x½"	3" SCH. 40	9½"
16"	17.40"	5/8" x 3"	1½" x 6"	8"x8"x½"	3" SCH. 40	9½"
18"	19.50"	¾" x 4"	2" x 6"	8"x8"x½"	4" SCH. 40	10"
20"	21.60"	¾" x 4"	2" x 6"	8"x8"x½"	4" SCH. 40	10"
24"	25.80"	¾" x 4"	2" x 6"	8"x8"x½"	4" SCH. 40	10"
30"	32.00"	1" x 5"	3" x 6"	15"x15"x ½"	6" DIP	10"
36"	38.30"	1" x 5"	3" x 6"	15"x15"x ½"	6" DIP	10"

Bell End Sewer Pipe

northern pipe products

▸ PVC GRAVITY SEWER PIPE | Bell End Sewer Pipe Specifications

Northern Pipe Products PVC Belled Sewer Pipe is made from compounds conforming to requirements of ASTM D-1784 and meets all dimensional and physical specifications of ASTM D-3034. 4" through 6" is manufactured in 10' overall lengths, while 8" through 15" is 14' laying length.

▸ ASTM D-3034 | Bell End Sewer Pipe

NOMINAL PIPE SIZE (IN.)	SDR	PIPE OUTSIDE DIAMETER (IN.)	MINIMUM WALL (IN.)	POUNDS PER FOOT	LENGTH	FEET PER PALLET	FEET PER TRUCKLOAD
4"	35	4.215"	.120"	1.01 lbs.	10'	630'	20,160'
4"	35	4.215"	.120"	1.01 lbs.	20'	1,260'	20,160'
4"	26	4.215"	.162"	1.35 lbs.	10'	630'	20,160'
6"	35	6.275"	.180"	2.26 lbs.	10'	330'	7,920'
6"	35	6.275"	.180"	2.33 lbs.	14'	462'	8,316'
6"	26	6.275"	.241"	3.00 lbs.	10'	330'	7,920'
8"	35	8.400"	.240"	4.17 lbs.	14'	336'	6,048'
10"	35	10.500"	.300"	6.55 lbs.	14'	168'/210'	3,402'
12"	35	12.500"	.360"	9.41 lbs.	14'	112'	2,688'
15"	35	15.300"	.437"	14.16 lbs.	14'	84'	1,512'

▸ ASTM D-2729 | Bell End Sewer Pipe

NOMINAL PIPE SIZE (IN.)	PIPE OUTSIDE DIAMETER (IN.)	MINIMUM WALL (IN.)	POUNDS PER FOOT	LENGTH	FEET PER PALLET	FEET PER TRUCKLOAD
4"	4.215"	.075"	.64 lbs.	10'	630'	20,160'
6"	6.275"	.100"	1.27 lbs.	10'	330'	7,920'

Bell End Sewer Pipe

northern pipe products

▸ PERFORATION SPECIFICATIONS

▸ DRAINAGE PIPE | ASTM D-2729

NOMINAL PIPE SIZE (IN.)	PIPE OUTSIDE DIAMETER (IN.)	MINIMUM WALL (IN.)	LENGTH	ROWS OF PERFORATIONS	HOLE SIZE	HOLE SPACING PER ROW	FEET PER PALLET
4"	4.215"	.075"	10'	2	5/8	5	630'
6"	6.275"	.100"	10'	2	5/8	5	330'

▸ HIGHWAY UNDERDRAIN SYSTEMS | ASTM F-758

NOMINAL PIPE SIZE (IN.)	PIPE OUTSIDE DIAMETER (IN.)	MINIMUM WALL (IN.)	LENGTH	ROWS OF PERFORATIONS	HOLE SIZE	HOLE SPACING PER ROW	FEET PER PALLET
4"	4.215"	.120"	10'	4	1/4	3	630'
6"	6.275"	.180"	10'	4	1/4	3	330'

▸ SDR-35 SEWER PIPE | ASTM D-3034

NOMINAL PIPE SIZE (IN.)	PIPE OUTSIDE DIAMETER (IN.)	MINIMUM WALL (IN.)	LENGTH	ROWS OF PERFORATIONS	HOLE SIZE	HOLE SPACING PER ROW	FEET PER PALLET
4"	4.215"	.120"	10'	2	5/8	5	630'
6"	6.275"	.180"	10'	2	5/8	5	330'

TYPICAL 2-ROW PATTERN | CONFORMS TO ASTM D-2729

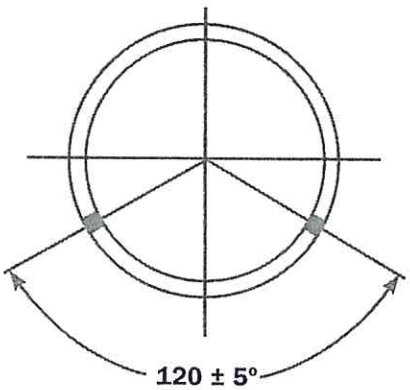

TYPICAL 4-ROW PATTERN | CONFORMS TO ASTM F-758

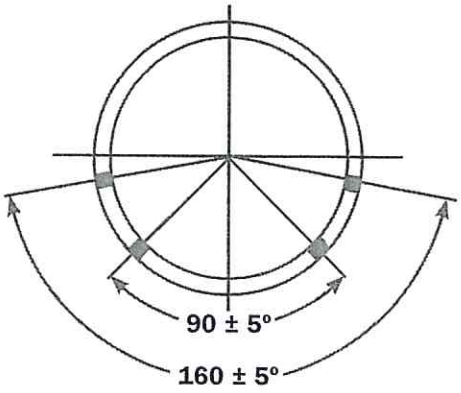

TENCATE

Mirafi

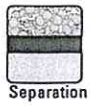

Mirafi® 500X

Mirafi® 500X geotextile is composed of high-tenacity polypropylene yarns, which are woven into a stable network such that the yarns retain their relative position. Mirafi® 500X geotextile is inert to biological degradation and resistant to naturally encountered chemicals, alkalis, and acids.

Mechanical Properties	Test Method	Unit	Minimum Average Roll Value	
			MD	CD
Grab Tensile Strength	ASTM D 4632	N (lbs)	890 (200)	890 (200)
Grab Tensile Elongation	ASTM D 4632	%	15	10
Trapezoid Tear Strength	ASTM D 4533	N (lbs)	334 (75)	334 (75)
Mullen Burst Strength	ASTM D 3786	kPa (psi)	2756 (400)	
Puncture Strength[1]	ASTM D 4833	N (lbs)	400 (90)	
CBR Puncture Strength	ASTM D 6241	N (lbs)	3115 (700)	
Apparent Opening Size (AOS)[2]	ASTM D 4751	mm (U.S. Sieve)	0.43 (40)	
Permittivity	ASTM D 4491	sec^{-1}	0.05	
Flow Rate	ASTM D 4491	$l/min/m^2$ ($gal/min/ft^2$)	204 (5.0)	
UV Resistance (at 500 hours)	ASTM D 4355	% strength retained	70	

[1] ASTM D 4833 has been replaced with ASTM D 6241
[2] ASTM D 4751, AOS is a Maximum Opening Diameter Value

Physical Properties	Test Method	Unit	Typical Value	
Weight	ASTM D 5261	g/m^2 (oz/yd^2)	136 (4.0)	
Thickness	ASTM D 5199	mm (mils)	0.5 (20)	
Roll Dimensions (width x length)	--	m (ft)	3.8 x 132 (12.5 x 432)	5.3 x 94.2 (17.5 x 309)
Roll Area	--	m^2 (yd^2)	502 (600)	502 (600)
Estimated Roll Weight	--	kg (lb)	95 (210)	95 (210)

Disclaimer: TenCate assumes no liability for the accuracy or completeness of this information or for the ultimate use by the purchaser. TenCate disclaims any and all express, implied, or statutory standards, warranties or guarantees, including without limitation any implied warranty as to merchantability or fitness for a particular purpose or arising from a course of dealing or usage of trade as to any equipment, materials, or information furnished herewith. This document should not be construed as engineering advice.

TENCATE
materials that make a difference

TENCATE
Mirafi

Drainage

Mirafi® 140NL

Mirafi® 140NL is a nonwoven geotextile composed of polypropylene fibers, which are formed into a network such that the fibers retain their relative position. Mirafi® 140NL is inert to biological degradation and resists naturally encountered chemicals, alkalis, and acids.

Mechanical Properties	Test Method	Unit	Minimum Average Roll Value	
			MD	CD
Grab Tensile Strength	ASTM D 4632	N (lbs)	401 (90)	401(90)
Grab Tensile Elongation	ASTM D 4632	%	50	50
Trapezoid Tear Strength	ASTM D 4533	N (lbs)	178 (40)	178 (40)
Mullen Burst Strength	ASTM D 3786	kPa (psi)	1206 (175)	
Puncture Strength[1]	ASTM D 4833	N (lbs)	245 (55)	
CBR Puncture Strength	ASTM D 6241	N (lbs)	1113 (250)	
Apparent Opening Size (AOS)[2]	ASTM D 4751	mm (U.S. Sieve)	0.25 (60)	
Permittivity	ASTM D 4491	sec^{-1}	2.0	
Flow Rate	ASTM D 4491	$l/min/m^2$ ($gal/min/ft^2$)	5907 (145)	
UV Resistance (at 500 hours)	ASTM D 4355	% strength retained	70	

[1] ASTM D 4833 has been replaced with ASTM D 6241
[2] ASTM D 4751: AOS is a Maximum Opening Diameter Value

Physical Properties	Test Method	Unit	Typical Value	
Weight	ASTM D 5261	g/m^2 (oz/yd^2)	136 (4.0)	
Thickness	ASTM D 5199	mm (mils)	0.9 (35)	
Roll Dimensions (width x length)	--	m (ft)	3.8 x 110 (12.5 x 360)	4.5 x 110 (15 x 360)
Roll Area	--	m^2 (yd^2)	418 (500)	502 (600)
Estimated Roll Weight	--	kg (lb)	60 (133)	70 (160)

Disclaimer: TenCate assumes no liability for the accuracy or completeness of this information or for the ultimate use by the purchaser. TenCate disclaims any and all express, implied, or statutory standards, warranties or guarantees, including without limitation any implied warranty as to merchantability or fitness for a particular purpose or arising from a course of dealing or usage of trade as to any equipment, materials, or information furnished herewith. This document should not be construed as engineering advice.

TENCATE
materials that make a difference

Fusible PVC® Pipe Material Submittal

Sand Coulee Water System Replacement Project

Sand Coulee, MT

Underground Solutions®

13135 Danielson Street, Suite 201
Poway, CA 92064
Ph: (858) 679-9551
Fax: (858) 679-9555

www.UndergroundSolutions.com

Underground Solutions®

13135 Danielson Street, Suite 201
Poway, CA 92064
Tel: (858) 679-9551
Fax: (858) 679-9555
www.undergroundsolutions.com

7/23/2014

Mr. Barry Boland
Ed Boland Construction
Great Falls, MT

Subject: Sand Coulee Water System Replacement Project

Dear Mr. Boland,

Please find attached the submittal information for the materials and services that are to be provided by Underground Solutions, Inc. for the above referenced project. It is our intention to provide all of the relevant information necessary to answer any questions that all concerned parties might have.

Thank you for your consideration. If you have any questions, please contact me at the number shown below.

Sincerely,

Patrick Laidlaw

Regional Sales Manager
PLaidlaw@UndergroundSolutions.com
Phone: (801) 699-2804

Pipe Data Sheet - 8" DR 14

Pipe Material Designation	Fusible C-900®
Application	Potable Water
Pipe Color	Blue
Nominal Diameter (in)	8
Dimension Ratio	DR 14
Series	DIPS
Outside Diameter (in)	9.05
Minimum Wall Thickness (in)	0.65
Inside Diameter (in)	7.68
Pressure Rating (PSIG)	305 (as calculated by AWWA C900)
ASTM-D1784 Cell Classification and/or Material Code	12454 and/or PVC 1120
Recommended Minimum Bend Radius (LF)	189
Recommended Maximum Safe Pulling Force (lbs)	47,700
Pipe Ends	Plain
Nominal Pipe Length	40' or 45' Sticks

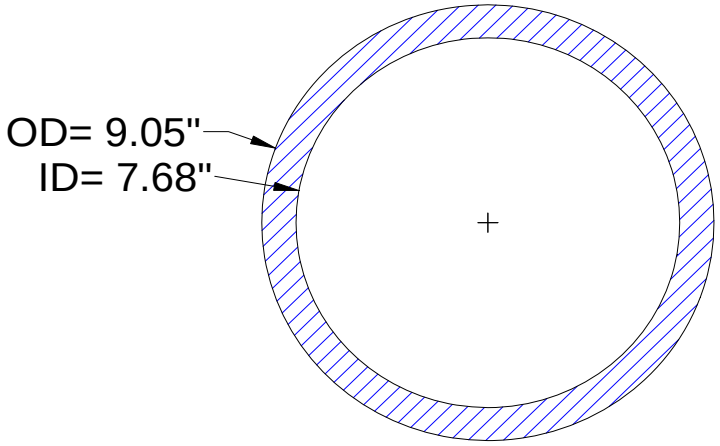

8" DR 14 Fusible C-900®

Fusible C-900® and Fusible C-905® pipe is now manufactured and marked to conform to the latest versions of the AWWA/ANSI C900 and C905 standards. The current version of AWWA/ANSI C900 increases the pressure classes for C900 PVC pipe to conform with pressure classes for C905 PVC pipe. During a transition period, UGSI may supply pipe manufactured and marked in accordance with either the 1997 or current versions of the appropriate standard, depending on pipe availability.

Northern Pipe Products Inc.

1302 39th St. NW
Fargo, North Dakota 58102
701-282-7655

CERTIFICATION OF CONFORMANCE

THIS CERTIFIES THAT THE FOLLOWING MATERIAL(S):
4" through 12" diameter DR 14 Class 305, DR 18 Class 235, and DR 25 Class 165 AWWA C-900-07 PVC plain end fusible pipe.
14" through 24" diameter DR 18 Class 235, DR 21 Class 200, and DR 25 Class 165 AWWA C-905-10 PVC plain end fusible pipe.

AS MANUFACTURED BY NORTHERN PIPE PRODUCTS AND SUPPLIED TO:
Underground Solutions, Inc., 13135 Danielson St, Suite 201, Poway, CA 92064.

MEET THE REQUIREMENTS OF THE FOLLOWING SPECIFICATION(S):
PVC pipe per the requirements of the Standards AWWA C-900-07 & AWWA C-905-10.
PVC potable water compounds per the requirements of NSF Standard 14.
PVC compound material cell classification 12454 per the requirements of ASTM D-1784.

All pipe certified to be made in the USA as per the requirements of ARRA.

Subscribed and sworn to before me this day of

Date 2.7.12

Notary _____

SANDRA OLSON
Notary Public
State of North Dakota
My Commission Expires June 2, 2014

NORTHERN PIPE PRODUCTS INC.

By _____
Vic Weigel

Title VP of Engineering

13135 Danielson Street, Suite 201
Poway, CA 92064
Tel: (858) 679-9551
Fax: (858) 679-9555
www.undergroundsolutions.com

Buy American Certification

Section 1605 of the American Recovery and Reinvestment Act of 2009 states that:

"None of the funds appropriated or otherwise made available by this Act may be used for a project for the construction, alteration, maintenance, or repair of a public building or public work unless all of the iron, steel, and manufactured goods used in the project are produced in the United States."

Underground Solutions, Inc. hereby certifies that the products, Fusible C-900®, Fusible C-905® and FPVC®, supplied by Underground Solutions, Inc. are in full compliance with the final requirements of the American Recovery and Reinvestment Act of 2009 ("ARRA").

Underground Solutions, Inc. is able to meet all of the requirements of Section 1605 of ARRA (the "Buy American" provision), and as required under the final definition of Section 1605, the products will be manufactured in the United States in accordance with such Buy American Requirements.

Underground Solutions, Inc.
Name of Supplier

Eric C. Davis
Eric C. Davis, VP of Operations

1) Inspect Shipment

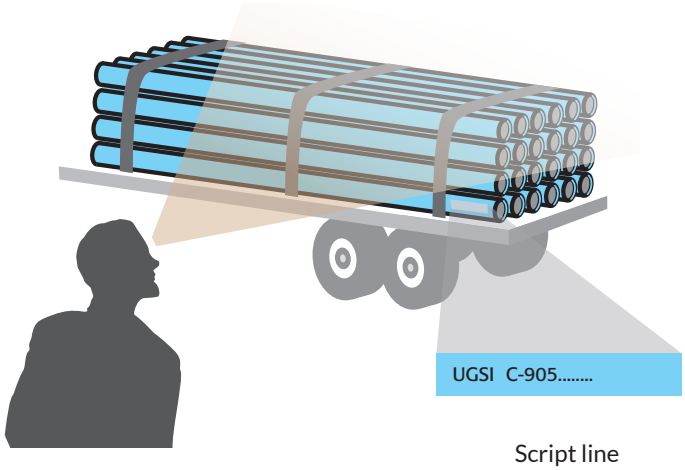

Script line

Inspect the pipe shipment prior to unloading for proper pipe size, type and color. Check for pipe damage or any other inconsistencies with the pipe load. Contact UGSI immediately if discrepancies are found.

Be sure to check:

- Size (diameter)
- Thickness (DR Rating)
- Color
- Lengths
- Quantity

Problems? Call UGSI at (858) 679-9551

2) Lifting Mechanisms

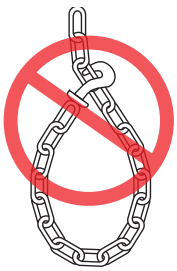

NO!

No Chains!

No Wire Ropes!

OK!

Nylon Straps OK!

Chisel Forks OK!

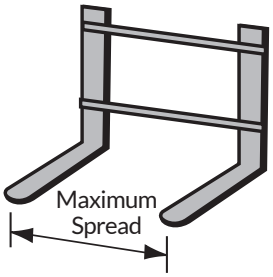

3) Moving and Unloading Pipe

Straps: For pipe lengths greater than 40 feet, as well as individual pipe lengths

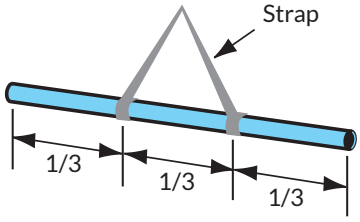

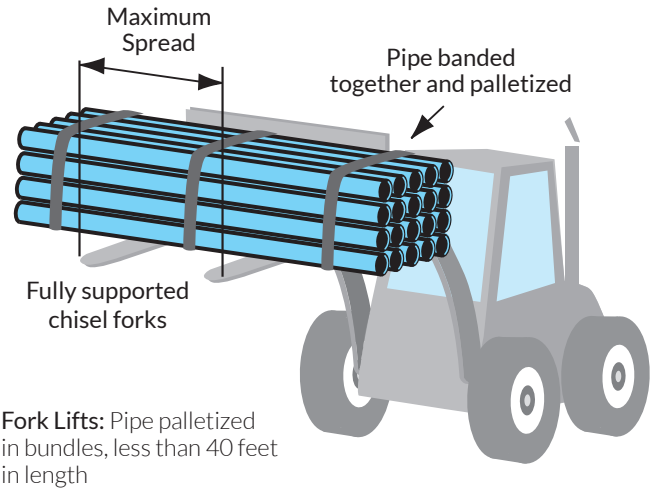

Fork Lifts: Pipe palletized in bundles, less than 40 feet in length

Machine rated for weight

4) Storage

If pipe is to be stored +1 year in direct sunlight, use opaque cover and allow air-circulation around pipe to dissipate heat build-up

Storage	
Pipe Diameter (inches)	Maximum Number of Rows Stacked
8 or less	5
10 to 21	4
24 to 30	3
33 to 48	2

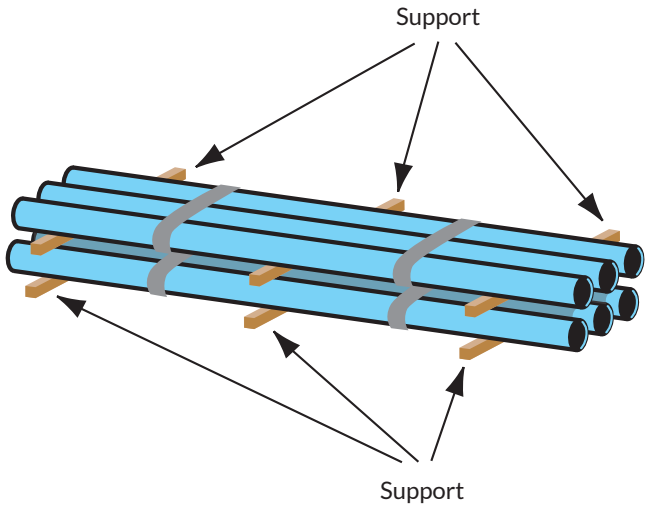

For detailed handling instructions: Please contact your local UGSI representative, or the Poway, CA office at (858) 679-9551

1) Pulling Head Installation and Pipe End Sealing

Pull Head

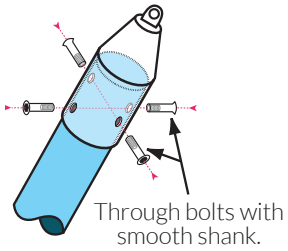

- Use UGSI recommended pulling head to achieve maximum allowable pull force recommendation for the pipe.
- Do not exceed maximum recommended allowable pull force for the given pipe selection.
- Do not exceed the maximum allowable bend radius for the given pipe selection.

Sealing Pipe End

Listed in the order of preference:

1) Install sewer plug.

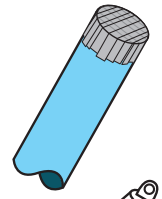

2) Use plastic and tape.

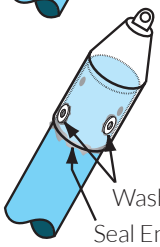

3) **Seal pull head.** Seal all holes with washers and/or silicon caulking.

2) 'S' Curve - Slip Line or Pipe Burst Insertion

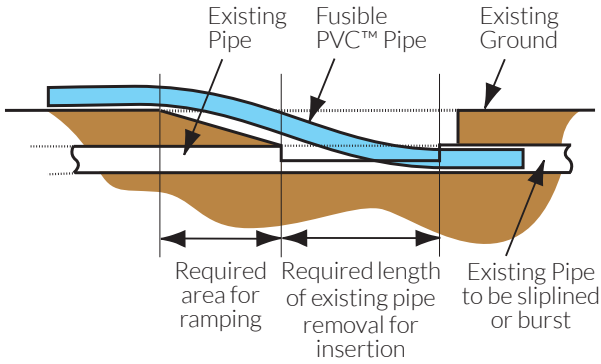

- Determine 'S' curve length from depth of host pipe and size of Fusible PVC™ pipe by contacting your UGSI representative.
- Determine required length of pipe removal, pit, and tail ditch from 'S' curve dimensions by contacting your UGSI representative.
- **For Detailed Installation Procedures:** Please contact your local UGSI representative, or the Poway, California office at (858) 679-9551.

3) Horizontal Directional Drilling (HDD) Insertion

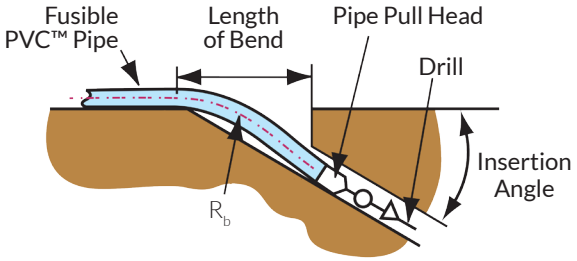

1) Determine entry point angle.
2) Determine factor from table based on angle of bore insertion.
3) Multiply factor times the allowable bend radius of the Fusible PVC™ pipe being installed to determine the required length of bend prior to entry.
4) Consult UGSI website or local representative for the allowable bend radius for the product pipe, and detailed installation procedures.

www.undergroundsolutions.com

Curve Length Factor for Insertion Angle	
Degree of Insertion	Factor
6	0.1
8	0.14
10	0.17
12	0.21
14	0.24
15	0.26

4) Direct Bury Installation

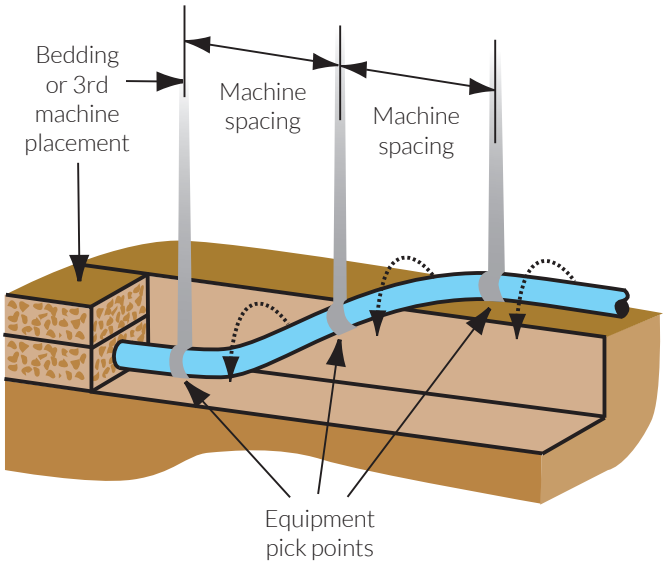

1) Determine the 'S' curve length from required offset and size of Fusible PVC™ pipe by contacting your UGSI representative.
2) Use machines at beginning, middle and end of 'S' curve to lift and place pipe.
3) Or install by pulling pipe into place (See #2 illustration above).

Underground Solutions®

Hydrostatic Pressure Testing

1) Basics for Test

- Determine test pressure and duration from the standards having precedent over the installation.
- General Industry practice for testing is a one hour test at 150% of the long-term working pressure for the pipeline.
- Perform all testing under supervision and adhere to all applicable safety standards.
- **WARNING** - Pressurized pipelines and attached appurtenances represent a potential safety hazard due to mis-installation, mis-handling, or mis-testing of the pipeline.
- It is recommended that all pipelines be tested AFTER installation and burial, if applicable.
- Testing is to be completed hydrostatically. Removal of air is **mandatory**.
- General guidelines for hydrostatic pressure testing of PVC water piping systems can be found under AWWA C605 - Underground Installation of Polyvinyl Chloride (PVC) Pressure Pipe and Fittings for Water.

2) Check Appurtenances

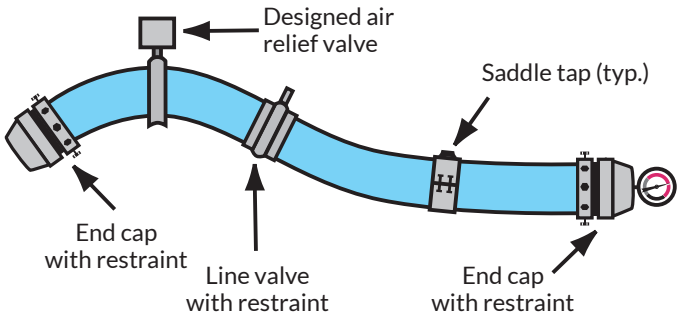

- All restraint devices are installed per manufacturers's recommendations and appropriate torque.
- All devices must be rated for test pressure.
- Set up test at lowest elevation.
- Remove air at the highest elevation(s).

3) Purge Air

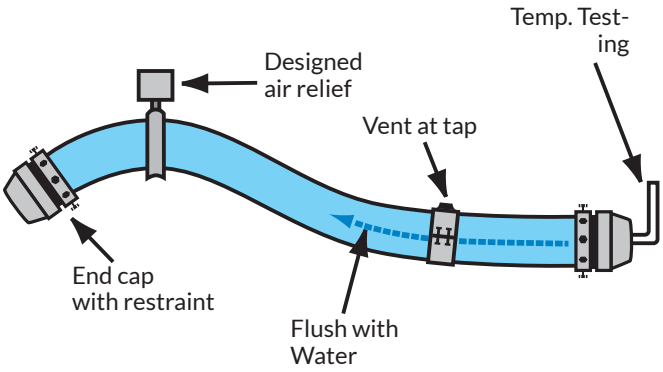

- Use designed air relief valves, air flushing with water, temporary testing air relief at end caps, or taps in line.
- Assure all air is removed prior to test.
- Let air settle out of test water before final venting.

4) Perform Test

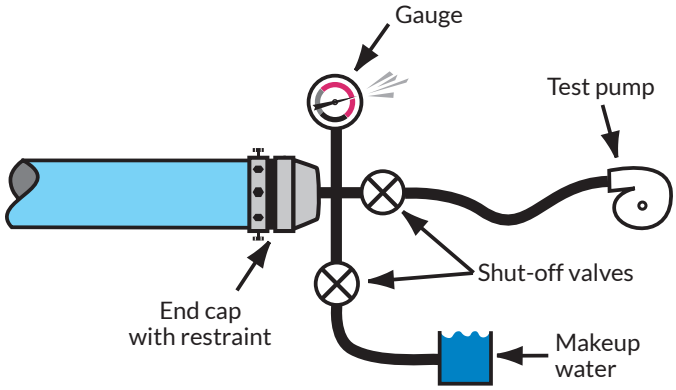

- Pressurize line.
- Hold for test period.
- Fix leaks, if any found.
- Retest if necessary.

For detailed testing procedures: Please contact your local UGSI representative, or the Poway, CA office at (858) 679-9551

1) Tapping Types for Pressure Application

Direct Tapping

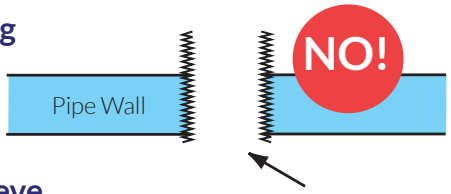

Saddle or Sleeve

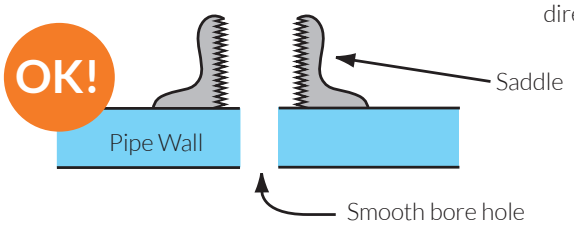

Wet Tap (under pressure)

Dry Tap (NO pressure)

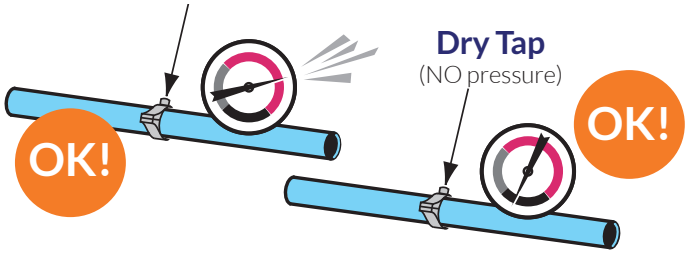

2) Saddles and Sleeves

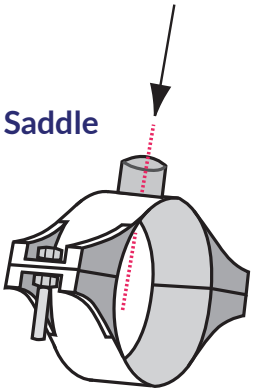

- Must be specifically designed for PVC.
- Install per manufacturer's instructions.
- UGSI recommends that all taps be performed with an appropriate saddle or sleeve.

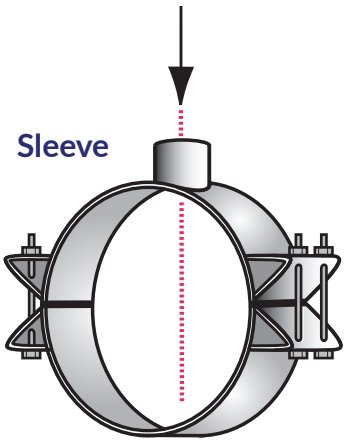

3) Equipment

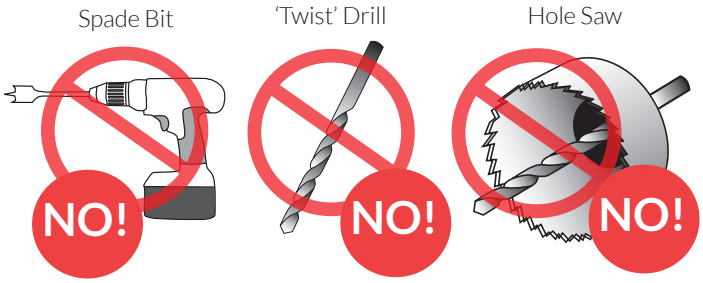

- Use appropriate Reed, Mueller, or approved equal tapping machine.
- Use appropriate PVC shell cutter, made for use with manufacturer specific tapping machine
- Use tapping machine per manufacturer's recommendations and instructions

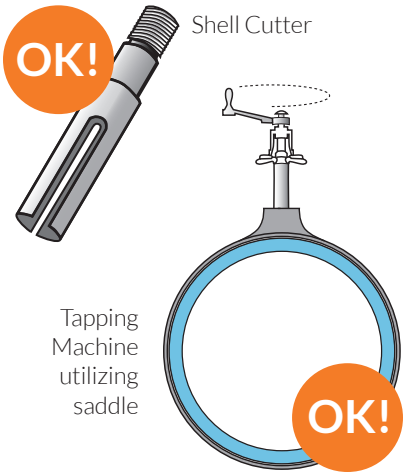

4) Sizes Allowed

- If a greater size tap is required than is shown below, alternate methods are available to accommodate the required size. Please contact your UGSI representative, or the Poway, CA office at (858) 679-9551.

Pipe Size	Recommended Tap Sizes					
	3/4"	1"	1-1/2"	2"	4"	6"
4"	X					
6"	X	X				
8"	X	X				
10"	X	X				
12"	X	X				
14"	X	X				
16"	X	X	X	X		
18"	X	X	X	X		
20"	X	X	X	X	X	
24"	X	X	X	X	X	
30"	X	X	X	X	X	X
36"	X	X	X	X	X	X

For detailed tapping instructions: Please contact your local UGSI representative, or the Poway, CA office at (858) 679-9551

underground SOLUTIONS®

Clayton Lumpkin

of Underground Solutions has successfully met all of the requirements of Underground Solutions, Inc.

Class III Fusion

training and is qualified to fuse UGSI Fusible PVC™ pipe up to and including 24”. This certificate expires on:

September 24, 2014

Instructor: *Scott Bishop*

underground SOLUTIONS®

Dan Berenson

of Underground Solutions, Inc. has successfully met all of the requirements of Underground Solutions, Inc.

Class II Fusion

training and is qualified to fuse UGSI Fusible PVC™ pipe up to and including 16”. This certificate expires on:

June 1, 2014

Instructor: *Scott Bishop*

7128 Commercial Ave.
Billings, MT. 59101
406.294.4455

Submittals

(Meters & Pits)

Project: Sand Coulee Water System Replacement Project

Project Location: Sand Coulee, MT

Supplier: MT Waterworks

Engineer: NCI Engineering Company

General Contractor: Ed Boland Construction, Inc.

SUBMITTAL DATA SHEET

NL Coil Pit Setter – 790-272KKPP 330X15

MNPT x MNPT

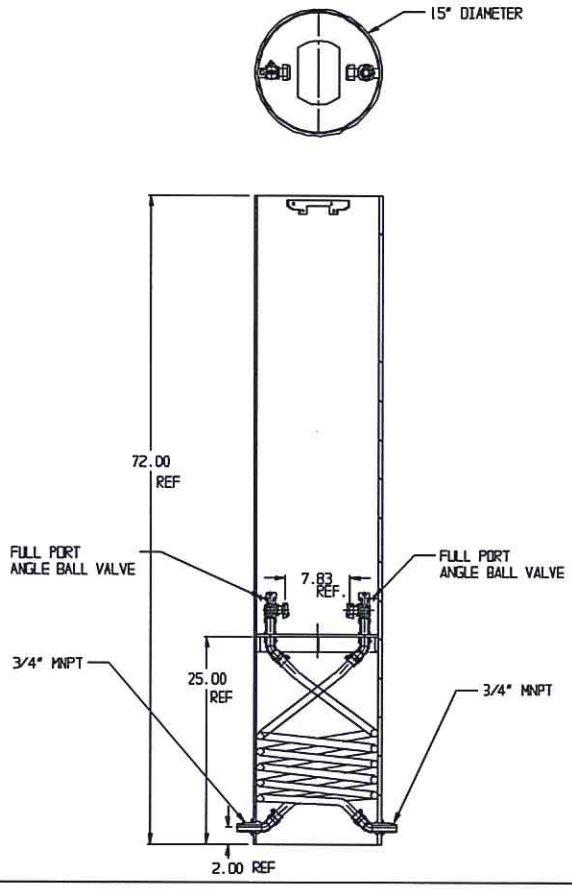

SUBMITTAL INFORMATION

- Manufactured in compliance with ANSI/AWWA C800 (latest revision)
- Brass components in contact with potable water conform to ASTM B584, UNS C89833 (latest revision) and identified with "NL"
- Certified to NSF/ANSI 61 and NSF/ANSI 372
- Brass components not in contact with potable water conform to ASTM B62 and ASTM B584, UNS C83600 -85-5-5-5 (latest revision)
- Coiled CTS tubing made from Engineered Polymer Materials
- Stainless steel insert stiffeners designed to optimize flow
- Heavy wall PVC shell and impact resistant rigid meter platform
- Large wrench flats provided for proper installation

A.Y. McDonald Mfg. Co.
P.O. Box 508
Dubuque, IA 52004-508

Toll Free: 1-800-292-2737
Fax: 1-800-832-9296
Hours: 7:00 a.m. – 5:00 p.m., CST

sales@aymcdonald.com
www.aymcdonald.com

A.Y. McDonald considers the information on this assembly drawing correct when published. Item and option availability, including specifications, are subject to change without notice.

Submitted by:

SUBMITTAL DATA SHEET

Coiled Pit Cover – 90L15 X800

15" Cover Only

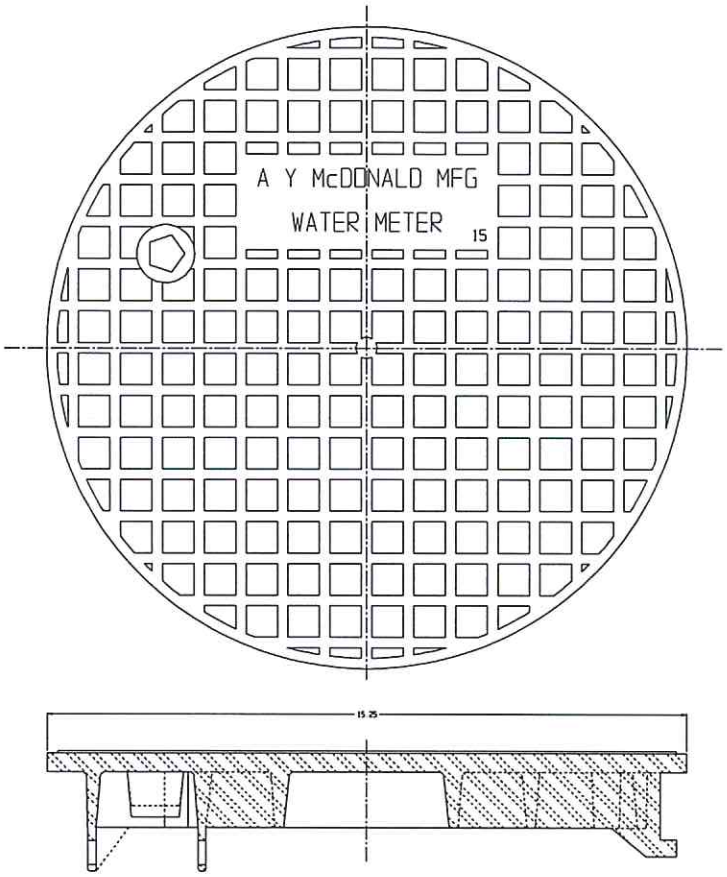

SUBMITTAL INFORMATION

- Plastic lid
- Locking lid utilize Bronze pentagon bolt

A.Y. McDonald Mfg. Co.
P.O. Box 508
Dubuque, IA 52004-508

Toll Free: 1-800-292-2737
Fax: 1-800-832-9296
Hours: 7:00 a.m. – 5:00 p.m., CST

sales@aymcdonald.com
www.aymcdonald.com

A.Y. McDonald considers the information on this assembly drawing correct when published. Item and option availability, including specifications, are subject to change without notice.

Submitted by:

SUBMITTAL DATA SHEET

Coil Pit Setter – 90-C1 15X4

Closed Cell Foam Insulating Cushions

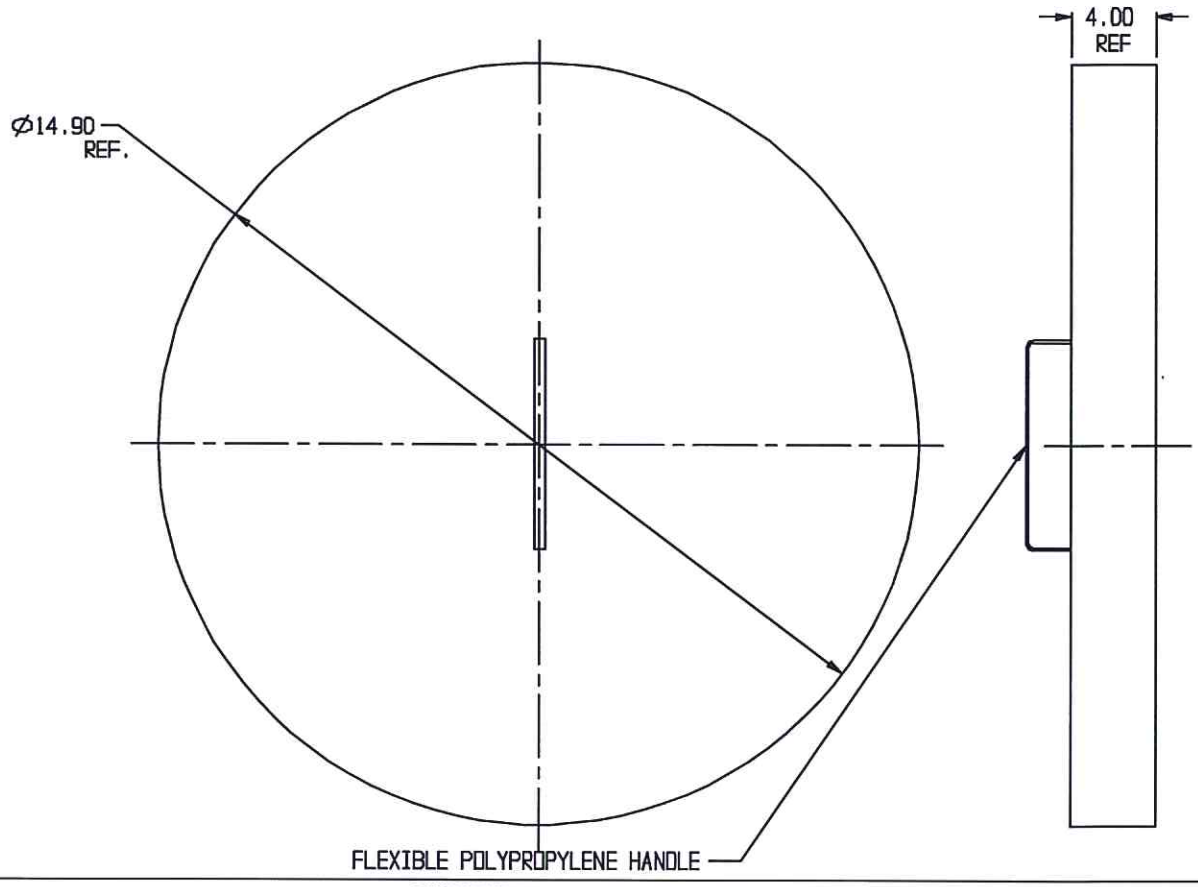

SUBMITTAL INFORMATION

- Made in North America

A.Y. McDonald Mfg. Co.
P.O. Box 508
Dubuque, IA 52004-508

Toll Free: 1-800-292-2737
Fax: 1-800-832-9296
Hours: 7:00 a.m. – 5:00 p.m., CST

sales@aymcdonald.com
www.aymcdonald.com

A.Y. McDonald considers the information on this assembly drawing correct when published. Item and option availability, including specifications, are subject to change without notice.

Submitted by:

SUBMITTAL DATA SHEET

NL Service Fitting – 74754-3Q

-3Q PEP Compression x FNPT

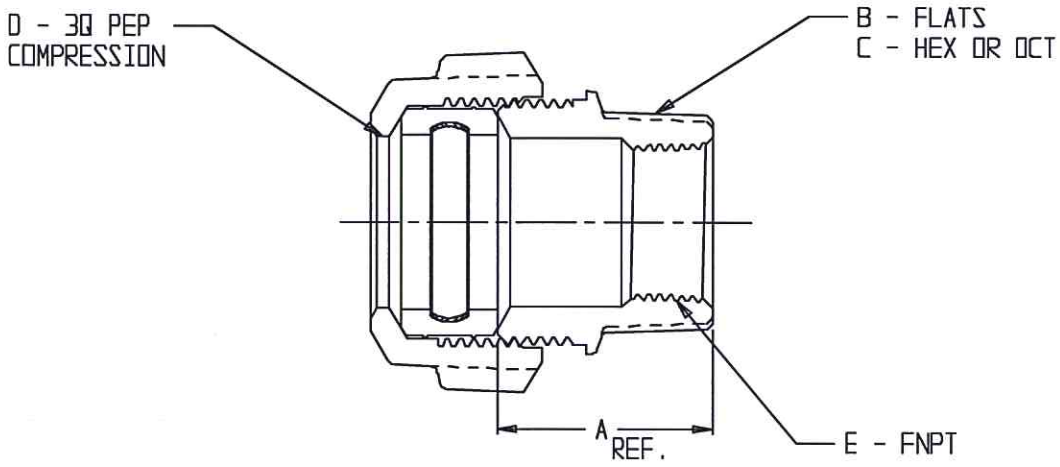

MODEL	SIZE	A	B	C	D	E
74754-3Q	3/4	1.40	1.37	OCT	3/4	3/4
74754-3Q	3/4 X 1	1.40	1.54	OCT	3/4	1
74754-3Q	3/4 X 1 1/2	2.66	1.85	OCT	3/4	1 1/2
74754-3Q	1	1.75	1.69	HEX	1	1
74754-3Q	1 X 3/4	2.08	1.88	HEX	1	3/4

SUBMITTAL INFORMATION

- Manufactured in compliance with ANSI/AWWA C800 (latest revision)
- Brass components in contact with potable water conform to ASTM B584, UNS C89833 (latest revision) and identified with "NL"
- Certified to NSF/ANSI 61 and NSF/ANSI 372
- Brass components not in contact with potable water conform to ASTM B62 and ASTM B584, UNS C83600 -85-5-5-5 (latest revision)
- Large wrench flats provided for proper installation
- Made in the United States of America

A.Y. McDonald Mfg. Co.
P.O. Box 508
Dubuque, IA 52004-508

Toll Free: 1-800-292-2737
Fax: 1-800-832-9296
Hours: 7:00 a.m. – 5:00 p.m., CST

sales@aymcdonald.com
www.aymcdonald.com

A.Y. McDonald considers the information on this assembly drawing correct when published. Item and option availability, including specifications, are subject to change without notice.

Submitted by:

SUBMITTAL DATA SHEET

NL Ball Style Meter Stop – 76101M

FNPT x Meter

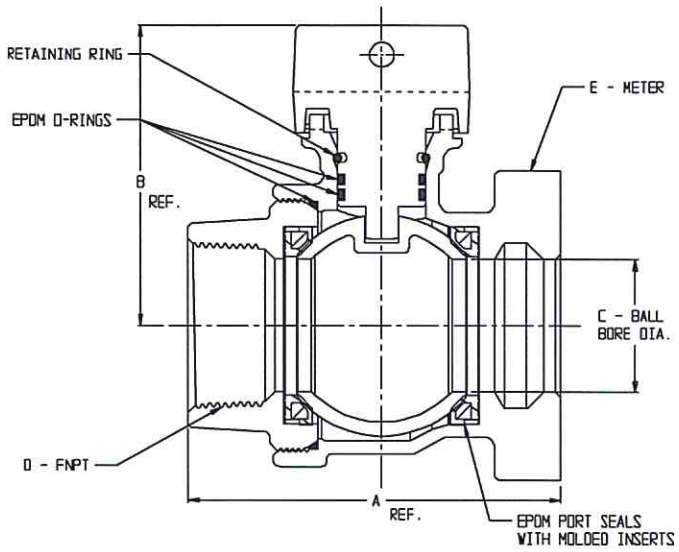

MODEL	SIZE	A	B	C	D	E
76101M	1 1/2	4.22	3.40	1.50	1 1/2	1 1/2
76101M	2	5.36	3.71	2.00	2	1 1/2 OR 2

DRAWING MAY NOT RESEMBLE ACTUAL VALVE CONFIGURATION

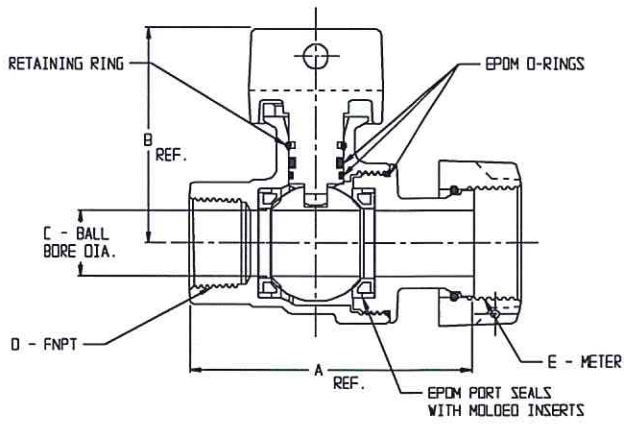

MODEL	SIZE	A	B	C	D	E
76101M	3/4 X 5/8 X 5/8	3.14	2.31	.63	3/4	5/8
76101M	3/4 X 5/8 X 3/4	3.16	2.31	.63	3/4	5/8X3/4, 3/4
76101M	3/4	3.20	2.42	.75	3/4	5/8X3/4, 3/4
76101M	1 X 3/4 X 3/4	3.45	2.42	.75	1	5/8X3/4, 3/4
76101M	1	4.18	2.65	1.00	1	1

SUBMITTAL INFORMATION

- Manufactured in compliance with ANSI/AWWA C800 (latest revision)
- Brass components in contact with potable water conform to ASTM B584, UNS C89833 (latest revision) and identified with "NL"
- Certified to NSF/ANSI 61 and NSF/ANSI 372
- Brass components not in contact with potable water conform to ASTM B62 and ASTM B584, UNS C83600 -85-5-5-5 (latest revision)
- PTFE coated brass ball
- Rated for 300 PSIG water pressure
- Blow out proof EPDM port seals
- End piece joint sealed with an EPDM o-ring and thread locker
- Made in the United States of America

A.Y. McDonald Mfg. Co.
P.O. Box 508
Dubuque, IA 52004-508

Toll Free: 1-800-292-2737
Fax: 1-800-832-9296
Hours: 7:00 a.m. – 5:00 p.m., CST

sales@aymcdonald.com
www.aymcdonald.com

A.Y. McDonald considers the information on this assembly drawing correct when published. Item and option availability, including specifications, are subject to change without notice.

Submitted by:

SUBMITTAL DATA SHEET

No-Lead 125LB Threaded Bronze Pipe Fittings
Bronze Unions - No-Lead - 72220

A.Y. McDonald Mfg. Co. No-Lead Pipe Fittings & Nipples are constructed from heavy duty bronze and are rated for commerical, industrial and residential applications up to 125 WOG. Threads conform to ANSI B1.20.1 and fitting dimensions comply with ANSI B16.15.

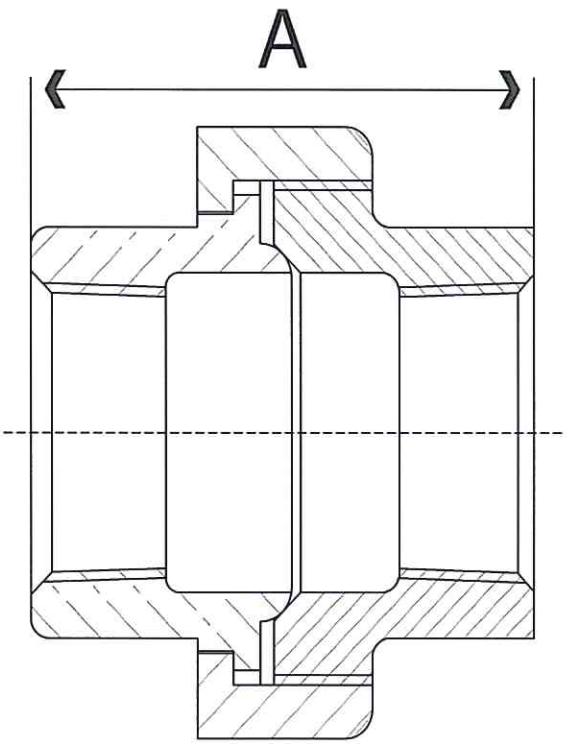

Dimensions

Size	A	Ctn Qty	Wt.
1/8"	1.34"	5	0.1
1/4"	1.50"	5	0.2
3/8"	1.53"	5	0.3
1/2"	1.81"	5	0.5
3/4"	1.93"	5	0.7
1"	2.11"	5	1.1
1 1/4"	2.37"	5	1.6
1 1/2"	2.60"	5	2.0
2"	2.91"	5	3.2
2 1/2"	3.30"	1	5.3
3"	3.60"	1	6.9
4"	4.70"	1	12.0

SUBMITTAL INFORMATION

- **Materials**
  C89833, AWWA C800, ASTM B584
- **Fitting Dimensions**
  ANSI B 16.15, Class 125
- **Union Dimensions**
  WWW-U-516-B
- **Threads**
  ANSI / ASME B1.20.1

NO-LEAD: The weighted average of the wetted surface of this no-lead product contacted by consumable water contains less than one quarter of one percent (0.25%) lead.

A.Y. McDonald Mfg. Co.
P.O. Box 508
Dubuque, IA 52004-0508

Toll Free: 1-800-292-2737
Fax: 1-800-832-9296
Hours: 7:00 a.m. - 5:00 p.m., CST

sales@aymcdonald.com
www.aymcdonald.com

A.Y. McDonald considers the information on this assembly drawing correct when published. Item and option availability, including specifications, are subject to change without notice.

Submitted by:

SUBMITTAL DATA SHEET

Two Piece Brass Saddle - 3805

C900 PVC x AWWA/CC

MODEL	SIZE	A	B	C	D	E	F
3805	4 X 1/2	1/2	1.23	2.38	1.50	HEX	4.800
3805	4 X 3/4	3/4	1.23	2.38	1.50	HEX	4.800
3805	4 X 1	1	1.23	2.56	1.72	HEX	4.800
3805	4 X 1 1/2	1 1/2	1.50	3.46	2.52	OCT	4.800
3805	4 X 2	2	1.50	3.96	3.10	OCT	4.800
3805	6 X 1/2	1/2	1.28	2.26	1.50	HEX	6.900
3805	6 X 3/4	3/4	1.28	2.26	1.50	HEX	6.900
3805	6 X 1	1	1.24	2.56	1.72	HEX	6.900
3805	6 X 1 1/2	1 1/2	1.63	3.46	2.52	OCT	6.900
3805	6 X 2	2	1.63	3.96	3.10	OCT	6.900
3805	8 X 3/4	3/4	1.26	2.38	1.50	HEX	9.050
3805	8 X 1	1	1.26	2.56	1.72	HEX	9.050
3805	8 X 1 1/2	1 1/2	1.50	3.96	3.10	OCT	9.050
3805	8 X 2	2	1.50	3.96	3.10	OCT	9.050
3805	10 X 3/4	3/4	2.32	2.92	1.69	HEX	11.100
3805	10 X 1	1	2.32	2.92	1.69	HEX	11.100
3805	10 X 1 1/2	1 1/2	2.30	4.37	3.10	HEX	11.100
3805	10 X 2	2	2.30	4.37	3.10	HEX	11.100
3805	12 X 3/4	3/4	2.32	2.92	1.69	HEX	13.200
3805	12 X 1	1	2.32	2.92	1.69	HEX	13.200
3805	12 1 1/2	1 1/2	2.30	4.37	3.10	HEX	13.200
3805	12 X 2	2	2.30	4.37	3.10	HEX	13.200

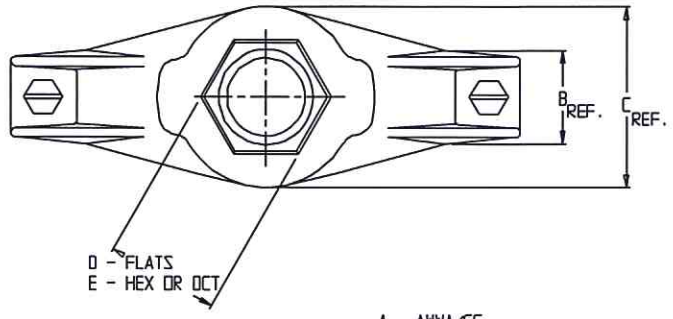

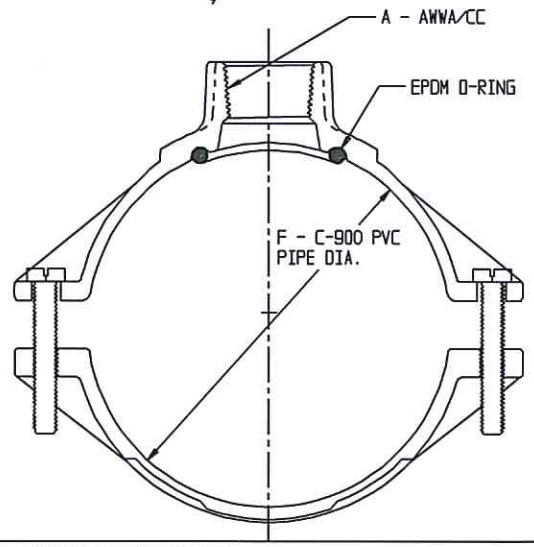

SUBMITTAL INFORMATION

- Manufactured in compliance with ANSI/AWWA C800 (latest revision)
- Brass components conform to ASTM B62 and ASTM B584, UNS C83600 -85-5-5-5 (latest revision)
- Certified to NSF/ANSI 61
- Silicon Bronze bolts
- EPDM o-ring
- Pipe and tap size, and thread type identified on saddle
- Outlet boss with large wrench flats
- Made in North America

A.Y. McDonald Mfg. CO.
P.O. Box 508
Dubuque, IA 52004-508

Toll Free: 1-800-292-2737
Fax: 1-800-832-9296
Hours: 7:00 a.m. – 5:00 p.m., CST

sales@aymcdonald.com
www.aymcdonald.com

A.Y. McDonald considers the information on this assembly drawing correct when published. Item and option availability, including specifications, are subject to change without notice.

Submitted by:

SUBMITTAL DATA SHEET

NL Ball Style Corporation Stop – 74701B-33

AWWA/CC x -33 PEP Compression

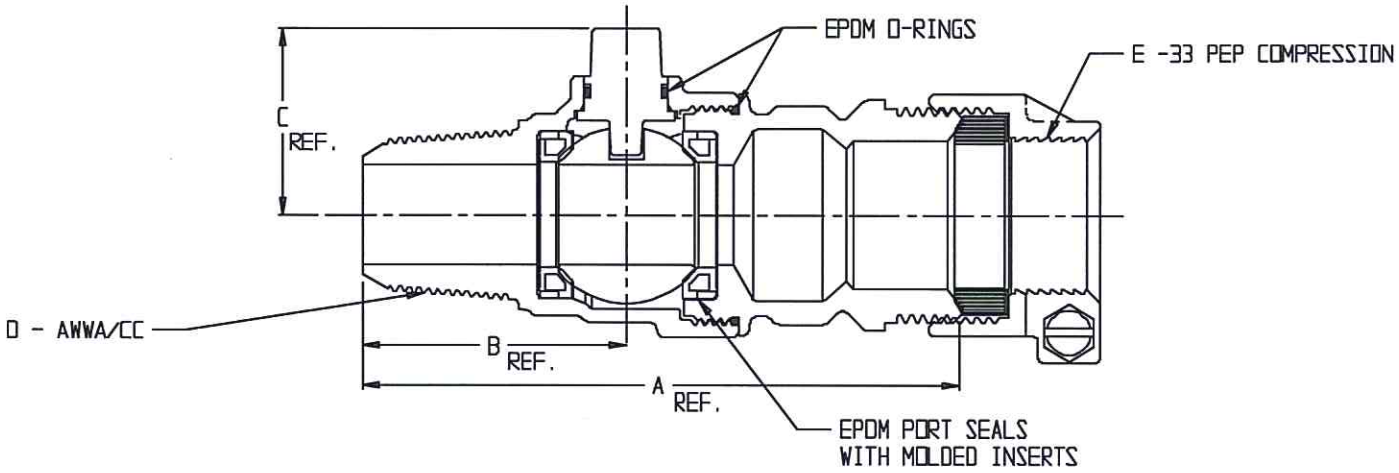

MODEL	SIZE	A	B	C	D	E
74701B-33	3/4	4.44	1.96	1.38	3/4	3/4
74701B-33	1	4.64	2.15	1.50	1	1
74701B-33	1 1/2	6.96	3.05	2.15	1 1/2	1 1/2
74701B-33	2	7.66	3.21	2.46	2	2

SUBMITTAL INFORMATION

- Manufactured in compliance with ANSI/AWWA C800 (latest revision)
- Brass components in contact with potable water conform to ASTM B584, UNS C89833 (latest revision) and identified with "NL"
- Certified to NSF/ANSI 61 and NSF/ANSI 372
- Brass components not in contact with potable water conform to ASTM B62 and ASTM B584, UNS C83600 -85-5-5-5 (latest revision)
- PTFE coated brass ball rotates 360°
- Rated for 300 PSIG water pressure
- Blow out proof EPDM port seals
- End piece joint sealed with an EPDM o-ring and thread locker
- Made in the United States of America

A.Y. McDonald Mfg. Co.
P.O. Box 508
Dubuque, IA 52004-508

Toll Free: 1-800-292-2737
Fax: 1-800-832-9296
Hours: 7:00 a.m. – 5:00 p.m., CST

sales@aymcdonald.com
www.aymcdonald.com

A.Y. McDonald considers the information on this assembly drawing correct when published. Item and option availability, including specifications, are subject to change without notice.

Submitted by:

Interstate

Interstate Plastic, Inc.
MANUFACTURERS OF PLASTIC PIPE

NSF-pw
Potable Water

NSF®

Interstate PE3408 High Density Polyethylene Pipe

Interstate PE3408 Pipe is manufactured from a high density, very high molecular weight polyethylene compound specifically designed for high hoop stress, outstanding stress crack resistance, and low temperature toughness.

Performance Features and Benefits

- Excellent chemical and corrosion resistance
- Outstanding stress crack resistance
- Lightweight and flexible
- Superior abrasion resistance
- NSF tested and certified for potable water
- High long term hydrostatic strength
- Tough and ductile

Interstate PE3408 pipe has outstanding physical properties. It does not rot; rust; pit or corrode through chemical or electrical reactions with the surrounding soil whether it is acidic, alkaline, wet or dry. It neither supports the growth of, nor is it affected by algae, bacteria, or fungus. It is also resistant to marine biological attack.

Protection against ultraviolet degradation during extended periods of outside storage and above ground service use is provided by the addition of carbon black and chemical thermal stabilizers.

Typical Applications for Interstate PE3408 Pipe

- Municipal water service lines
- Well piping
- Lawn sprinkler systems
- Swimming pools
- Livestock watering lines
- Potable water distribution lines
- Farm and ranch irrigation
- Fiber optic innerduct
- Industrial water distribution
- Oil patch lines
- Drilling supply lines
- Sewer lines
- Marine lines
- Process cooling lines
- Ground source heat pumps
- Electrical conduit

3375 E. Seltice Way • P.O. Box 398 • Post Falls, Idaho 83877 • (208) 773-4538 / (800) 776-7537
Fax (208) 773-9400 / (888) 206-3012

Interstate

Interstate Plastic, Inc.
MANUFACTURERS OF PLASTIC PIPE

NSF-pw
Potable Water

NSF®

ASTM D2239 (SIDR-PR) BASED ON CONTROLLED INSIDE DIAMETER
NSF APPROVED PE3408

SIDR-19, 80 PSI

Nominal Size (inches)	Pressure Rating (psi @ 73.4 F water)	Nominal Inside Diameter (inches)	Minimum Wall Thickness (inches)	Approx. Weight per 100 feet (pounds)	Standard Coiled Shipping Lengths (feet)
3/4"	80	0.824"	0.060"	7.2 lbs.	100 - 300
1"	80	1.049"	0.060"	9.1 lbs.	100 - 300
1¼"	80	1.380"	0.073"	15.2 lbs.	100 - 300
1½"	80	1.610"	0.085"	21.1 lbs.	100 - 300
2"	80	2.067"	0.109"	34.1 lbs.	100 - 300

SIDR-15, 100 PSI

3/4"	100	0.824"	0.060"	7.2 lbs.	100 - 300
1"	100	1.049"	0.070"	10.7 lbs.	100 - 300
1¼"	100	1.380"	0.092"	18.2 lbs.	100 - 300
1½"	100	1.610"	0.107"	24.9 lbs.	100 - 300
2"	100	2.067"	0.138"	41.1 lbs.	100 - 300

SIDR-11.5, 125 PSI

1/2"	125	0.622"	0.060"	5.5 lbs.	100 - 300
3/4"	125	0.824"	0.072"	8.6 lbs.	100 - 300
1"	125	1.049"	0.092"	14.0 lbs	100 - 300
1¼"	125	1.380"	0.120"	24.3 lbs	100 - 300
1½"	125	1.610"	0.140"	33.1 lbs	100 - 300
2"	125	2.067"	0.180"	54.5 lbs.	100 - 300

SIDR-9, 160 PSI

3/4"	160	0.824"	0.092"	11.4 lbs	100 - 300
1"	160	1.049"	0.117"	18.4 lbs.	100 - 300
1¼"	160	1.380"	0.153"	31.6 lbs.	100 - 300
1½"	160	1.610"	0.179"	43.2 lbs	100 - 300
2"	160	2.067"	0.230"	71.0 lbs.	100 - 300

SIDR-7, 200 PSI Water Service Line

3/4"	200	0.824"	0.118"	15.0 lbs	100 - 300
1"	200	1.049"	0.150"	24.3 lbs	100 - 300
1¼"	200	1.380"	0.197"	41.8 lbs	100 - 300
1½"	200	1.610"	0.230"	56.9 lbs	100 - 300
2"	200	2.067"	0.295"	93.8 lbs	100 - 300

Standard Coil Lengths: 100 - 300 foot coils
*All other coil lengths will be treated as special order items.

11-00

3375 E. Seltice Way • P.O. Box 398 • Post Falls, Idaho 83877 • (208) 773-4538 / (800) 776-7537
Fax (208) 773-9400 / (888) 206-3012

Polyethylene Plastic Pipe
ASTM D 2239 (SIDR-PR) Based on Controlled Inside Diameter

This specification covers polyethylene pipe made in standard thermoplastic pipe inside dimension ratios and pressure rated for water. Pipe manufactured under this specification is based on a controlled inside diameter. For a given nominal size, the inside diameter will be constant regardless of the pressure rating.

The most common ratios under this specification are SIDR-15, SIDR-11.5, SIDR-9, and SIDR-7. The lower the SIDR number, the thicker the wall and the higher the pressure rating. The definition of SIDR (Standard Inside Dimension Ratio) is the specific ratio of the average specified inside diameter to the minimum specified wall thickness. Figure 1 shows the difference between an SIDR-15 and an SIDR-7 cross section.

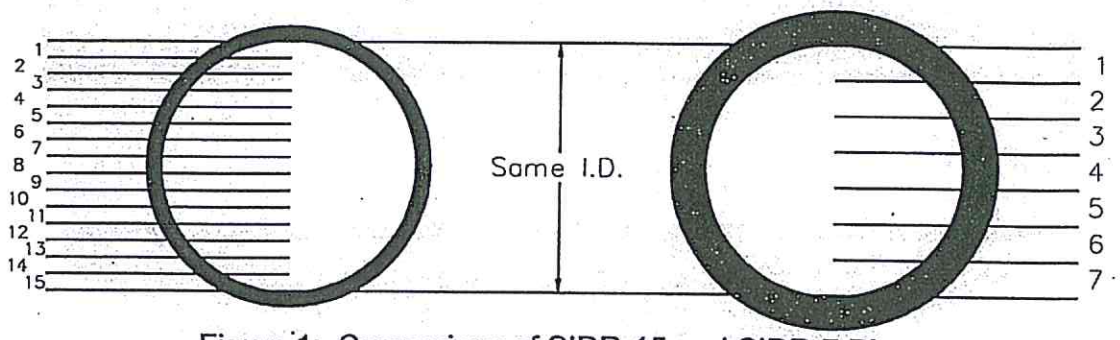

Figure 1: Comparison of SIDR-15 and SIDR-7 Pipe

This information is intended to provide general notes on our products and their uses. To the best of our knowledge, the information contained herein is accurate and reliable, but, because the many factors involved in the use of our products by others is beyond our control, Interstate Plastic, Inc. makes no guarantee, expressed or implied, and assumes no obligation or liability in the use of the herein contained data.

3375 E. Seltice Way • P.O. Box 398 • Post Falls, Idaho 83877 • (208) 773-4538 / (800) 776-7537
Fax (208) 773-9400 / (888) 206-3012

Interstate

Technical Information

ASTM D 3350 Standard Specifications for Polyethylene Plastics Pipe and Fittings Material

This specification covers the identification of polyethylene plastic pipe and fittings materials according to a cell classification system. In ASTM D 3350, polyethylene plastic pipe and fittings compounds are classified according to density, melt index, flexural modulus, tensile strength at yield, slow crack growth resistances, and the hydrostatic design basis at 73.4° F. The color and UV stabilization is indicated at the end of the cell classification by means of a letter designation.

The manner in which materials are identified in the cell classification is illustrated for a PE3408 pipe compound PE345464C as follows:

1. Density (0.941 to 0.955 g/cm³).....3
2. Melt Index (<0.15).....4
3. Flexural Modulus (110,000 to <160,000 psi.).....5
4. Tensile Strength at Yield (3,000 to <3,500 psi.).....4
5. Slow Crack Growth Resistance
   PENT (100 hours).....6
6. Hydrostatic Design Basis at 73.4°F (1,600 psi.).....4

   Color and UV Stabilizer-Black With 2% Minimum Carbon Black.....C

	Property	Test Method	0	1	2	3	4	5	6
1	Density, grams/cubic cm	D1505	-	0.910 to 0.925	0.926 to 0.940	0.941 to 0.955	>0.955	-	-
2	Melt Index	D1238	-	>1.0	1.0 to 0.4	<0.4 to 0.15	<0.15	Note A	Note B
3	Flexural Modulus, MPa (psi)	D790	-	<138 (<20,000)	138 to <278 (20,000 to <40,000)	2.78 to <552 (40,000 to <80,000)	552 to <758 (80,000 to 110, 000)	758 to <1103 (110,000 to <160,000)	>1103 (>160,000)
4	Tensile Strength at yield, MPa (psi)	D638	-	<15 (<2,200)	15 to <18 (2,200 to <2,600)	18 to <21 (2,600 to <3,000)	21 to <24 (3,000 to <3,500)	24 to <28 (3,500 to <4,000)	>28 (>4,000)
5	Slow Crack Growth Resistance		-						
	I. ESCR	D1693							
	a. Test Condition (100% Igepal.)			A	B	C	C		
	b. Test Duration, h			48	24	192	600		
	c. Failure, max, %			50	50	20	20		
	II. PENT (hours)	F1473							
	Molded plaque, 80°C, 2.4 MPa			0.1	1	3	10	30	100
6	Hydrostatic, design basis, MPa (psi), (23°C)	D2837	Not pressure rated	5.52 (800)	6.89 (1,000)	8.62 (1,250)	11.03 (1,600	-	-

Note A: Classify materials having a melt index less than 0.15 (cell 4) as cell 5 only if they have a flow rate not greater than 4.0 g/10 min. when tested in accordance with Test Method D 1238, Condition f.

Note B: Classify materials having a melt index less than 0.15 (cell 4) as cell 6 only if they have a flow rate not greater than 0.30 g/10 min when tested at 310°C and a total load (including piston) of 12,480 gf.

Table 9: Polyethylene Materials Cell Classification Limits

A	B	C	D	E
Natural	Colored	Black w/ 2% Minimum Black Carbon	Natural with UV Stabilizer	Colored with UV Stabilizer

Table 10: Polyethylene Materials Color & UV Stabilization Specifications

mation is intended to provide general notes on our products and their uses. To the best of our knowledge, the information contained herein is accurate and reliable, but, because the many factors n the use of our products by others is beyond our control. Interstate Plastic, Inc. makes no guarantee, expressed or implied, and assumes no obligation or liability in the use of the herein contained data.

3375 E Seltice Way – PO Box 398 – Post Falls, Idaho 83877 – (208) 773-4538 / (800) 776-7537
Fax (208) 773-9400 / (888) 206-3012

3375 E. Seltice Way
PO Box 398
Post Falls, Idaho 83877

Interstate Plastic, Inc.

MANUFACTURERS OF PLASTIC PIPE

Telephone (208) 773-4538
Toll Free (800) 776-7537
Fax (208) 773-9400

CERTIFICATION LETTER
Manufactured in the USA

Interstate Plastic, Inc. manufactures polyethylene plastic pipe with the trade designation, INTERSTATE.

INTERSTATE meets all the specifications in NSF Standard 14 for dimensional compliance, burst pressure, and other characteristics. The material is tested to comply with ANSI/NSF Standard 61 health effects requirements.

INTERSTATE meets the specifications set down in ASTM D-2239, SIDR-PR (Based on Controlled Inside Diameter) NSF Approved. Pressure rated at 80 PSI, 100 PSI, 125 PSI, 160 PSI and 200 PSI. (Manufactured in Black, Black with Blue Skin, Black with Purple Skin in 160PSI and 200PSI to meet different applications)

INTERSTATE is produced to meet ASTM D 3035 IPS (Iron Pipe Size) DR-PR (Dimension Ratio-Pressure Rated Based on Controlled Outside Diameter) NSF Approved. Pressure rated at 160 PSI, 200 PSI and 267 PSI. (Manufactured in Black, Black with Blue Skin, Black with Purple Skin in 160PSI and 200PSI to meet different applications)

INTERSTATE is produced to meet ASTM-D 2737 SDR-9 Copper Tube size and NSF Approved. Pressure rated at 200 PSI. (Manufactured in Black, Black with Blue Skin, Black with Purple Skin to meet different applications)

INTERSTATE is produced to meet AWWA-C901 for ASTM-D 2239, ASTM D 2737 and ASTM D-3035 specifications.

All products are regularly tested for performance and health effects specified by the applicable ASTM, AWWA and CSA performance standards for the use in potable water systems.

In addition, INTERSTATE has met the specifications published by General Services Administration, known as the COMMERCIAL ITEM DESCRIPTION A-A-996A.

ASTM-D1248 Standard specification for polyethylene plastics molding and extrusion materials

ASTM D 3350 Standard specification for polyethylene plastics pipe and fitting material

Interstate Plastic, Inc.

Larry Nehlich
Production Manager

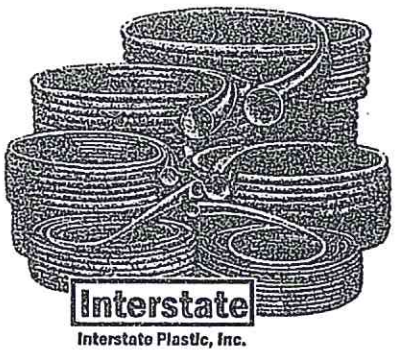

Interstate

NSF-pw
Potable Water

NSF®

Interstate PE 3408
200 psi Water Service Line Tubing
ASTM D 2737 Polyethylene (PE) Plastic Tubing
SDR-PR (Standard Dimension Ratio-Pressure Rated)
Based on Controlled Outside Diameter
NSF Approved NSF-pw

Standard Dimension Ratio SDR-9 Copper Tubing Size (CTS)

Nominal Size (inches)	Pressure Rating (psi @ 73.4 F water)	Nominal Outside Diameter (inches)	Approx. Inside Diameter (inches)	Approx. Wall Thickness (inches)	Approx. Weight per 100 feet (pounds)	Standard Coiled Shipping Lengths (feet)
3/4"	200	0.875"	0.671"	0.102"	10.3	100 - 300
1"	200	1.125"	0.865"	0.130"	16.9	100 - 300
1-1/4"	200	1.375"	1.060"	0.158"	25.0	100 - 300
1-1/2"	200	1.625"	1.250"	0.186"	34.8	100 - 300
2"	200	2.125"	1.640"	0.242"	59.4	100 - 300

Interstate PE3408
200 psi Water Service Line Pipe
ASTM D 2239 Polyethylene (PE) Plastic Pipe
SIDR-PR (Standard Inside Dimension Ratio-Pressure Rated)
NSF Approved NSF-pw

Standard Inside Dimension Ratio SIDR-7

Nominal Size (inches)	Pressure Rating (psi @ 73.4 F water)	Nominal Inside Diameter (inches)	Minimum Wall Thickness (inches)	Approx. Weight per 100 feet (pounds)	Standard Coiled Shipping Lengths (feet)
3/4	200	0.824"	0.118"	15.0 lbs.	100 - 300
1	200	1.049"	0.150"	24.3 lbs.	100 - 300
1 1/4	200	1.380"	0.197"	41.8 lbs.	100 - 300
1 1/2	200	1.610"	0.230"	56.9 lbs.	100 - 300
2	200	2.067"	0.295"	93.8 lbs.	100 - 300

Standard Coil Lengths: 100 - 300 foot coils
*All other coil lengths will be treated as special order items.

3/96

Interstate Plastic, Inc. • P.O. Box 398, Post Falls, Idaho 83854 • (208) 773-4538 • Fax (208) 773-9400

SUBMITTAL DATA SHEET

NL Ball Style Curb Stop – 76104-33

-33 PEP Compression x -33 PEP Compression

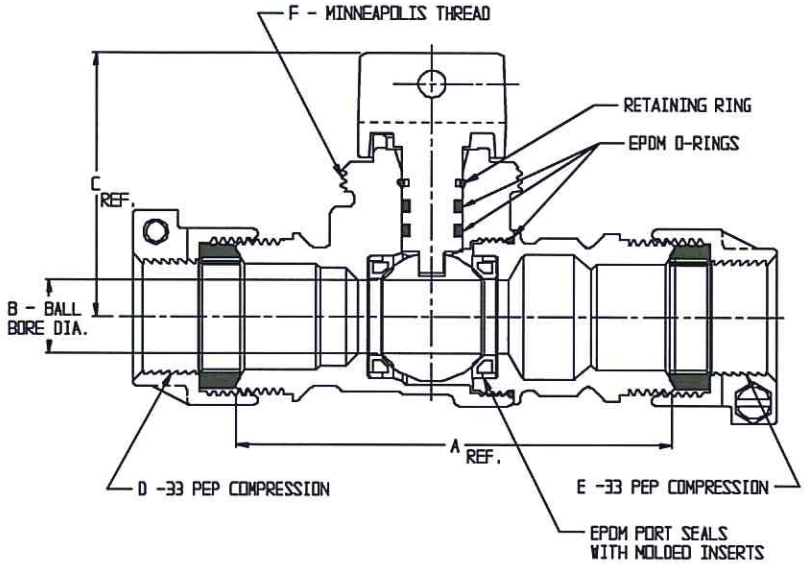

MODEL NO.	SIZE	A	B	C	D	E	F
76104-33	3/4	4.48	.75	2.70	3/4	3/4	1 1/2
76104-33	3/4 X 1 X 1	4.79	1.00	2.65	3/4	1	1 1/2
76104-33	1	4.80	1.00	2.65	1	1	1 1/2
76104-33	1 1/4	5.72	1.25	2.94	1 1/4	1 1/4	2
76104-33	1 1/2 X 2 X 1 1/2	8.52	2.00	3.71	1 1/2	1 1/2	2
76104-33	2	8.76	2.00	3.71	2	2	2

SUBMITTAL INFORMATION

- Manufactured in compliance with ANSI/AWWA C800 (latest revision)
- Brass components in contact with potable water conform to ASTM B584, UNS C89833 (latest revision) and identified with "NL"
- Certified to NSF/ANSI 61 and NSF/ANSI 372
- Brass components not in contact with potable water conform to ASTM B62 and ASTM B584, UNS C83600 -85-5-5-5 (latest revision)
- PTFE coated brass ball
- Rated for 300 PSIG water pressure
- Blow out proof EPDM port seals
- End piece joint sealed with an EPDM o-ring and thread locker
- Made in the United States of America

A.Y. McDonald Mfg. Co.
P.O. Box 508
Dubuque, IA 52004-508

Toll Free: 1-800-292-2737
Fax: 1-800-832-9296
Hours: 7:00 a.m. – 5:00 p.m., CST

sales@aymcdonald.com
www.aymcdonald.com

A.Y. McDonald considers the information on this assembly drawing correct when published. Item and option availability, including specifications, are subject to change without notice.

Submitted by:

SUBMITTAL DATA SHEET

Curb Boxes – 5615

Minneapolis Pattern

MODEL	SIZE	A-RANGE
5615	2 1/2	1 1/2' TO 2 1/2'
5615	3	2' TO 3'
5615	3 1/2	2 1/2' TO 3 1/2'
5615	4	3' TO 4'
5615	4 1/2	3 1/2' TO 4 1/2'
5615	5	4' TO 5'
5615	5 1/2	4 1/2' TO 5 1/2'
5615	6	5' TO 6'
5615	6 1/2	5 1/2' TO 6 1/2'
5615	7	6' TO 7'
5615	7 1/2	6 1/2' TO 7 1/2'
5615	8	7' TO 8'
5615	8 1/2	7 1/2' TO 8 1/2'
5615	9	8' TO 9'
5615	9 1/2	8 1/2' TO 9 1/2'
5615	10	9' TO 10'

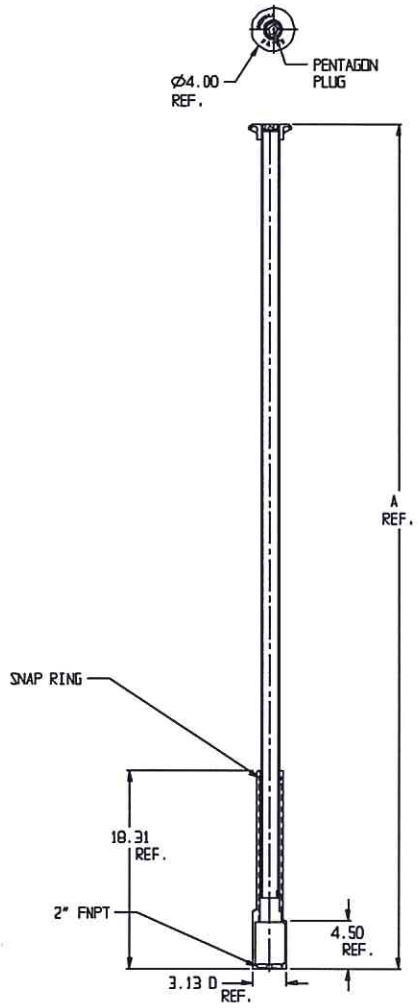

SUBMITTAL INFORMATION

- Brass components conform to ASTM B62 and ASTM B584, UNS C83600 -85-5-5-5 (latest revision)
- Lid and Base made of Cast Iron per ASTM A48, Class 25
- Upper Section made of steel pipe
- Coated with black dip
- Made in North America

A.Y. McDonald Mfg. Co.
P.O. Box 508
Dubuque, IA 52004-508

Toll Free: 1-800-292-2737
Fax: 1-800-832-9296
Hours: 7:00 a.m. – 5:00 p.m., CST

sales@aymcdonald.com
www.aymcdonald.com

A.Y. McDonald considers the information on this assembly drawing correct when published. Item and option availability, including specifications, are subject to change without notice.

Submitted by:

SUBMITTAL DATA SHEET

No-Lead 125LB Threaded Bronze Pipe Fittings
90° Bronze Elbow - No-Lead - 72290

A.Y. McDonald Mfg. Co. No-Lead Pipe Fittings & Nipples are constructed from heavy duty bronze and are rated for commerical, industrial and residential applications up to 125 WOG. Threads conform to ANSI B1.20.1 and fitting dimensions comply with ANSI B16.15.

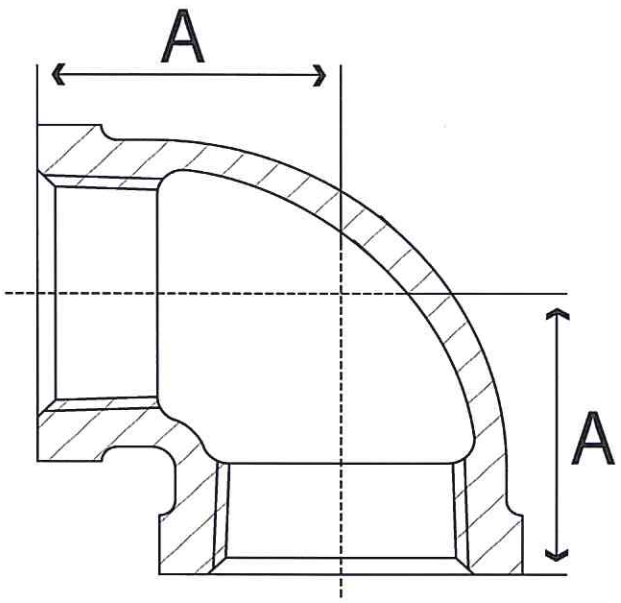

Dimensions

Size	A	Ctn Qty	Wt.
1/8"	0.54"	5	0.1
1/4"	0.71"	5	0.1
3/8"	0.82"	5	0.1
1/2"	1.01"	5	0.2
3/4"	1.18"	5	0.3
1"	1.43"	5	0.6
1 1/4"	1.69"	5	0.9
1 1/2"	1.84"	5	1.2
2"	2.12"	5	2.0
2 1/2"	2.70"	1	3.8
3"	3.08"	1	4.7
4"	3.79"	1	9.7

SUBMITTAL INFORMATION

- **Materials**
  C89833, AWWA C800, ASTM B584
- **Fitting Dimensions**
  ANSI B 16.15, Class 125
- **Union Dimensions**
  WWW-U-516-B
- **Threads**
  ANSI / ASME B1.20.1

NO-LEAD: The weighted average of the wetted surface of this no-lead product contacted by consumable water contains less than one quarter of one percent (0.25%) lead.

A.Y. McDonald Mfg. Co.
P.O. Box 508
Dubuque, IA 52004-0508

Toll Free: 1-800-292-2737
Fax: 1-800-832-9296
Hours: 7:00 a.m. - 5:00 p.m., CST

sales@aymcdonald.com
www.aymcdonald.com

A.Y. McDonald considers the information on this assembly drawing correct when published. Item and option availability, including specifications, are subject to change without notice.

Submitted by:

SUBMITTAL DATA SHEET

NL Service Fitting – 74753-33

-33 PEP Compression x MNPT

MODEL	SIZE	A	B	C	D	E
74753-33	3/4	2.03	3/4	3/4	OCT	1.38
74753-33	3/4 X 1	2.44	3/4	1	OCT	1.38
74753-33	1	2.76	1	1	OCT	1.85
74753-33	1 X 3/4	2.50	1	3/4	OCT	1.85
74753-33	1 X 1 1/2	2.69	1	1 1/2	HEX	1.69
74753-33	1 1/4	2.60	1 1/4	1 1/4	OCT	2.06
74753-33	1 1/4 X 1	2.60	1 1/4	1	OCT	2.10
74753-33	1 1/4 X 1 1/2	2.67	1 1/4	1 1/2	OCT	2.25
74753-33	1 1/2	2.70	1 1/2	1 1/2	OCT	2.44
→ 74753-33	2	2.96	2	2	OCT	3.09
74753-33	2 X 1	2.96	2	1	OCT	3.05

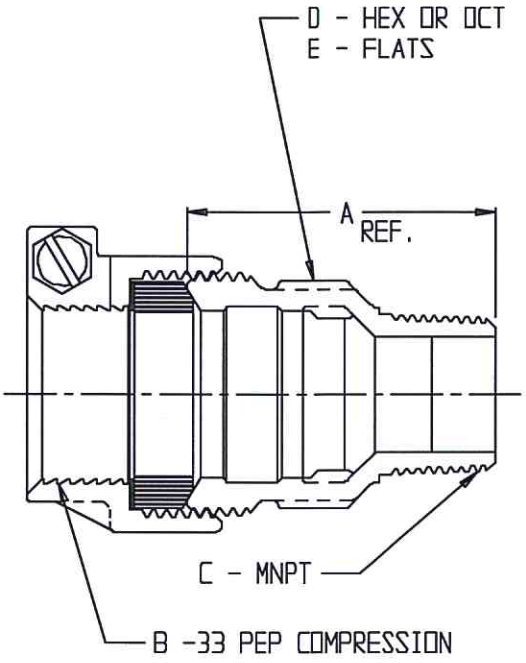

SUBMITTAL INFORMATION

- Manufactured in compliance with ANSI/AWWA C800 (latest revision)
- Brass components in contact with potable water conform to ASTM B584, UNS C89833 (latest revision) and identified with "NL"
- Certified to NSF/ANSI 61 and NSF/ANSI 372
- Brass components not in contact with potable water conform to ASTM B62 and ASTM B584, UNS C83600 -85-5-5-5 (latest revision)
- Large wrench flats provided for proper installation
- Made in the United States of America

A.Y. McDonald Mfg. Co.
P.O. Box 508
Dubuque, IA 52004-508

Toll Free: 1-800-292-2737
Fax: 1-800-832-9296
Hours: 7:00 a.m. – 5:00 p.m., CST

sales@aymcdonald.com
www.aymcdonald.com

A.Y. McDonald considers the information on this assembly drawing correct when published. Item and option availability, including specifications, are subject to change without notice.

Submitted by:

SUBMITTAL DATA SHEET

NL Service Fitting – 74753-55

-55 IP Compression x MNPT

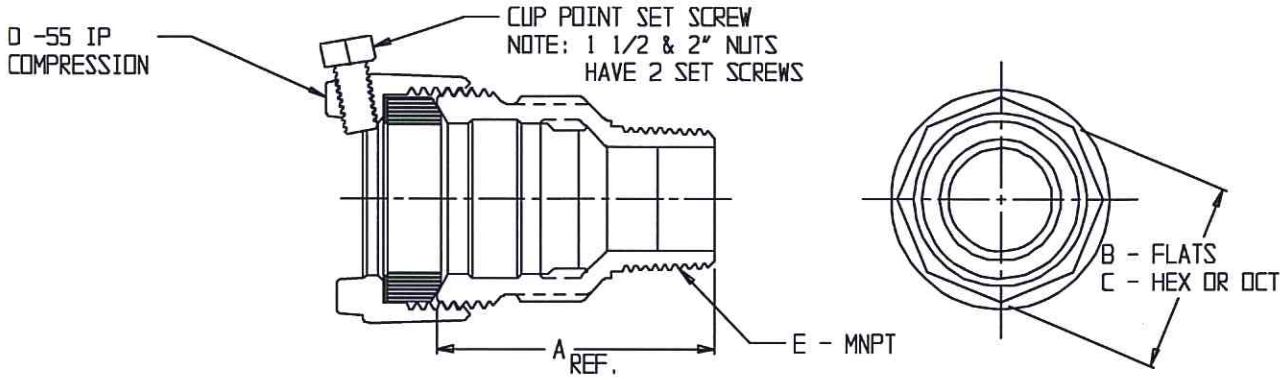

MODEL	SIZE	A	B	C	D	E
74753-55	3/4	2.03	1.38	OCT	3/4	3/4
74753-55	3/4 X 1	2.44	1.38	OCT	3/4	1
74753-55	1	2.76	1.85	OCT	1	1
74753-55	1 X 3/4	2.50	1.85	OCT	1	3/4
74753-55	1 X 1 1/2	2.69	1.69	HEX	1	1 1/2
74753-55	1 1/2	2.78	2.25	OCT	1 1/2	1 1/2
74753-55	1 1/2 X 1	2.55	2.31	OCT	1 1/2	1
74753-55	2	2.96	2.75	OCT	2	2
74753-55	2 X 1	2.96	3.05	OCT	2	1

SUBMITTAL INFORMATION

- Manufactured in compliance with ANSI/AWWA C800 (latest revision)
- Brass components in contact with potable water conform to ASTM B584, UNS C89833 (latest revision) and identified with "NL"
- Certified to NSF/ANSI 61 and NSF/ANSI 372
- Brass components not in contact with potable water conform to ASTM B62 and ASTM B584, UNS C83600 -85-5-5-5 (latest revision)
- Large wrench flats provided for proper installation
- Made in the United States of America

A.Y. McDonald Mfg. Co.
P.O. Box 508
Dubuque, IA 52004-508

Toll Free: 1-800-292-2737
Fax: 1-800-832-9296
Hours: 7:00 a.m. – 5:00 p.m., CST

sales@aymcdonald.com
www.aymcdonald.com

A.Y. McDonald considers the information on this assembly drawing correct when published. Item and option availability, including specifications, are subject to change without notice.

Submitted by:

Badger Meter

Recordall® Disc Meters

Lead-Free Bronze Alloy Models 120 & 170, Sizes 1-1/2" (40 mm) & 2" (50 mm), NSF/ANSI Standards 61 and 372 Certified

DESCRIPTION

The Recordall Models 120 and 170 Disc Series meters meet or exceed the most recent revision of AWWA Standard C700 and are available in a lead-free bronze alloy. Both meters comply with the lead-free provisions of the Safe Drinking Water Act, are certified to NSF/ANSI Standards 61 and 372 (Trade Designations: M120-LL and M170LL) and carry the NSF-61 mark on the housing. All components of the lead-free bronze alloy meter (housing, measuring element, seals, and so on) comprise the certified system.

Applications: For use in measurement of potable cold water in residential, commercial and industrial services where flow is in one direction only.

Operation: Water flows through the meter's strainer and into the measuring chamber where it causes the disc to nutate. The disc, which moves freely, nutates on its own ball, guided by a thrust roller. A drive magnet transmits the motion of the disc to a follower magnet located within the permanently sealed register. The follower magnet is connected to the register gear train. The gear train reduces the disc nutations into volume totalization units displayed on the register or encoder face.

Operating Performance: The Recordall Disc Series meters meet or exceed registration accuracy for the low flow rates (95%), normal operating flow rates (100 ± 1.5%), and maximum continuous operation flow rates as specifically stated in AWWA Standard C700.

Construction: Recordall Disc meter construction, which complies with ANSI/AWWA standard C700, consists of three basic components: meter housing, measuring chamber, and permanently sealed register or encoder. The water meter is available in a lead-free bronze alloy. A corrosion-resistant engineered polymer material is used for the measuring chamber.

Magnetic Drive: Direct magnetic drive, through the use of high-strength magnets, provides positive, reliable and dependable register coupling for straight-reading or AMR/AMI meter reading options.

Tamper-Proof Features: Unauthorized removal of the register or encoder is inhibited by the option of a tamper detection seal wire screw, TORX® tamper-resistant seal screw or the proprietary tamper-resistant keyed seal screw. Each can be installed at the meter site or at the factory.

Maintenance: Badger Meter Recordall Disc Series meters are designed and manufactured to provide long-term service with minimal maintenance. When maintenance is required, it can be performed easily either at the meter installation or at any other convenient location.

To simplify maintenance, the register, measuring chamber, and strainer can be replaced without removing the meter housing from the installation. No change gears are required for accuracy calibration. Interchangeability of parts among like-sized meters minimizes spare parts inventory investment. The built-in strainer has an effective straining area of twice the inlet size.

Connections: Companion flanges in cast iron or NL bronze are available as options. Straight connection sets are available in NL bronze.

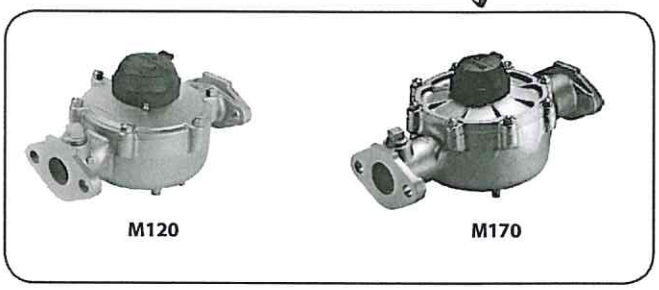

SPECIFICATIONS

Meter Model	M120	M170
Typical Operating Range (100% ± 1.5%)	2.5…120 gpm (0.57…27 m³/hr)	2.5…170 gpm (0.57…39 m³/hr)
Low Flow (Min. 95%)	1.25 gpm (0.28 m³/hr)	1.5 gpm (0.34 m³/hr)
Maximum Continuous Operation	80 gpm (18 m³/hr)	100 gpm (23 m³/hr)
Pressure Loss at Maximum Continuous Operation	4.8 psi at 80 gpm (0.33 bar at 18 m³/hr)	3.3 psi at 100 gpm (0.23 bar at 23 m³/hr)
Maximum Operating Temperature	80° F (26° C)	80° F (26° C)
Maximum Operating Pressure	150 psi (10 bar)	150 psi (10 bar)
Measuring Element	Nutating disc, positive displacement	Nutating disc, positive displacement
Meter Connections	1-1/2" AWWA two-bolt elliptical flange, drilled or 1-1/2…11-1/2 NPT internal pipe threads	2" AWWA two-bolt elliptical flange, drilled or 2…11-1/2 NPT internal pipe threads
Test Plugs	Optional 1" NPT test plug (TP)	Optional 1" NPT test plug (TP)

Materials

Meter Housing	Lead-free bronze alloy
Housing Top Plates	Lead-free bronze alloy
Measuring Chamber	Engineered polymer
Disc	Engineered polymer
Trim	Stainless steel
Strainer	Engineered polymer
Disc Spindle	Stainless steel
Magnet	Ceramic
Magnet Spindle	Stainless steel
Register Lid and Shroud	Engineered polymer, bronze

DIMENSIONS

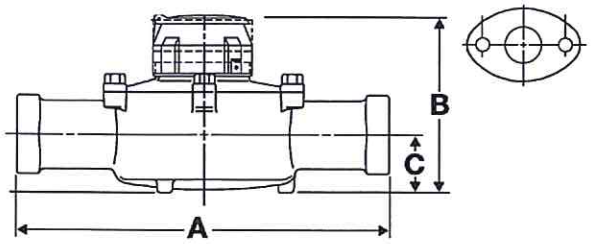

Meter Size	Meter Model	A Laying Length	B Height Reg./RTR	C Centerline Base	Width	Approx. Shipping Weight
1-1/2" (40 mm)	120 EL, Hex 120 EL, TP	12-5/8" (321 mm)	7" (178 mm)	2-3/8" (60 mm)	8-3/4" (222 mm)	19 lb (8.6 kg)
1-1/2" (40 mm)	120 ELL 120 ELL, TP	13" (330 mm)	7" (178 mm)	2-3/8" (60 mm)	8-3/4" (222 mm)	19 lb (8.6 kg)
2" (50 mm)	170 EL, Hex 170 EL, TP	15-1/4" (387 mm)	8" (203 mm)	2-7/8" (73 mm)	9-1/2" (241 mm)	30 lb (13.6 kg)
2" (50 mm)	170 ELL 170 ELL, TP	17" (432 mm)	8" (203 mm)	2-7/8" (73 mm)	8-1/2" (241 mm)	30 lb (13.6 kg)

EL = Elliptical | ELL = Elliptical Long | Hex = Hexagon, 1-1/2...11-1/2" NPT Thread | TP=Test Plug 1"

REGISTERS / ENCODERS

Standard—Sweep-Hand Registration

The standard register is a straight-reading, permanently sealed magnetic drive register. Dirt, moisture, tampering and lens fogging problems are eliminated. The register has a six-odometer wheel totalization display, 360° test circle with center sweep hand, and flow finder to detect leaks. Register gearing is made of self-lubricating engineered polymer, which minimizes friction and provides long life. The multi-position register simplifies meter installation and reading. The register capacity is 10,000,000 gallons (1,000,000 ft³, 100,000 m³).

Meter Model	Gallon	Cubic Feet	Cubic Meter
120	100	10	1/0.1
170	100	10	1

Optional—Encoders for AMR/AMI Reading Solutions

AMR/AMI solutions are available for all Recordall Disc Series meters. All reading options can be removed from the meter without disrupting water service. Badger Meter encoders provide years of reliable, accurate readings for a variety of applications and are also available pre-wired to Badger Meter approved AMR/AMI solutions. See details at **www.badgermeter.com.**

PRESSURE LOSS CHARTS

1-1/2" Meter

Rate of Flow in Gallons per Minute

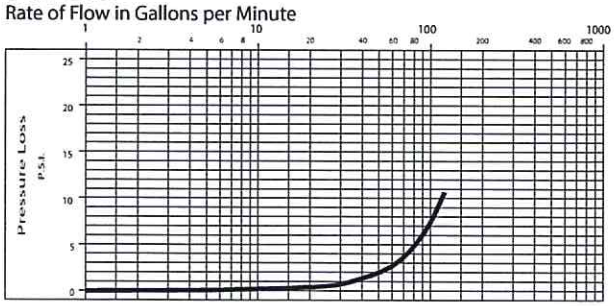

2" Meter

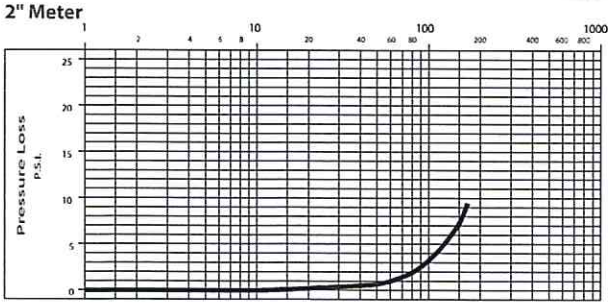

ACCURACY CHARTS

1-1/2" Meter

Rate of Flow in Gallons per Minute

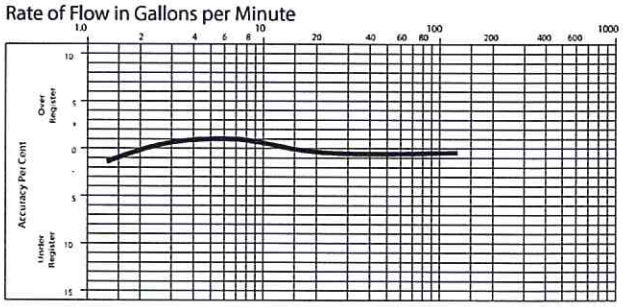

2" Meter

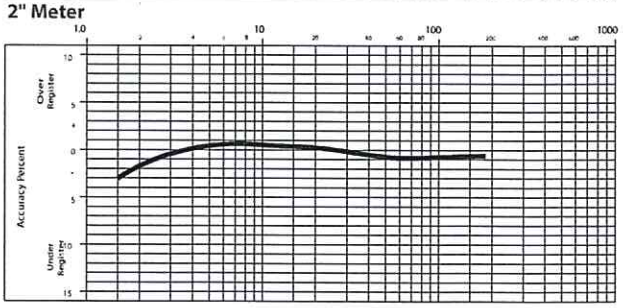

Recordall is a registered trademark of Badger Meter, Inc. Other trademarks appearing in this document are the property of their respective entities.
Due to continuous research, product improvements and enhancements, Badger Meter reserves the right to change product or system specifications without notice, except to the extent an outstanding contractual obligation exists. © 2013 Badger Meter, Inc. All rights reserved.

www.badgermeter.com

The Americas | Badger Meter | 4545 West Brown Deer Rd | PO Box 245036 | Milwaukee, WI 53224-9536 | 800-876-3837 | 414-355-0400
México | Badger Meter de las Americas, S.A. de C.V. | Pedro Luis Ogazon N°32 | Esq. Angelina N°24 | Colonia Guadalupe Inn | CP 01050 | México, DF | Mexico | +52-55-5662-0882
Europe, Middle East and Africa | Badger Meter Europa GmbH | Nurtinger Str 76 | 72639 Neuffen | Germany | +49-7025-9208-0
Czech Republic | Badger Meter Czech Republic s.r.o. | Maříkova 2082/26 | 621 00 Brno, Czech Republic | +420-5-41420411
Slovakia | Badger Meter Slovakia s.r.o. | Racianska 109/B | 831 02 Bratislava, Slovakia | +421-2-44 63 83 01
Asia Pacific | Badger Meter | 80 Marine Parade Rd | 21-04 Parkway Parade | Singapore 449269 | +65-63464836
China | Badger Meter | 7-1202 | 99 Hangzhong Road | Minhang District | Shanghai | China 201101 | +86-21-5763 5412

Legacy Document Numbers: RDM-DS-00071-EN and RDM-DS-00072-EN

Badger Meter

Recordall® Disc Meters

Lead-Free Bronze Alloy, Sizes 5/8", 5/8" x 3/4", 3/4" & 1"
NSF/ANSI Standards 61 and 372 Certified

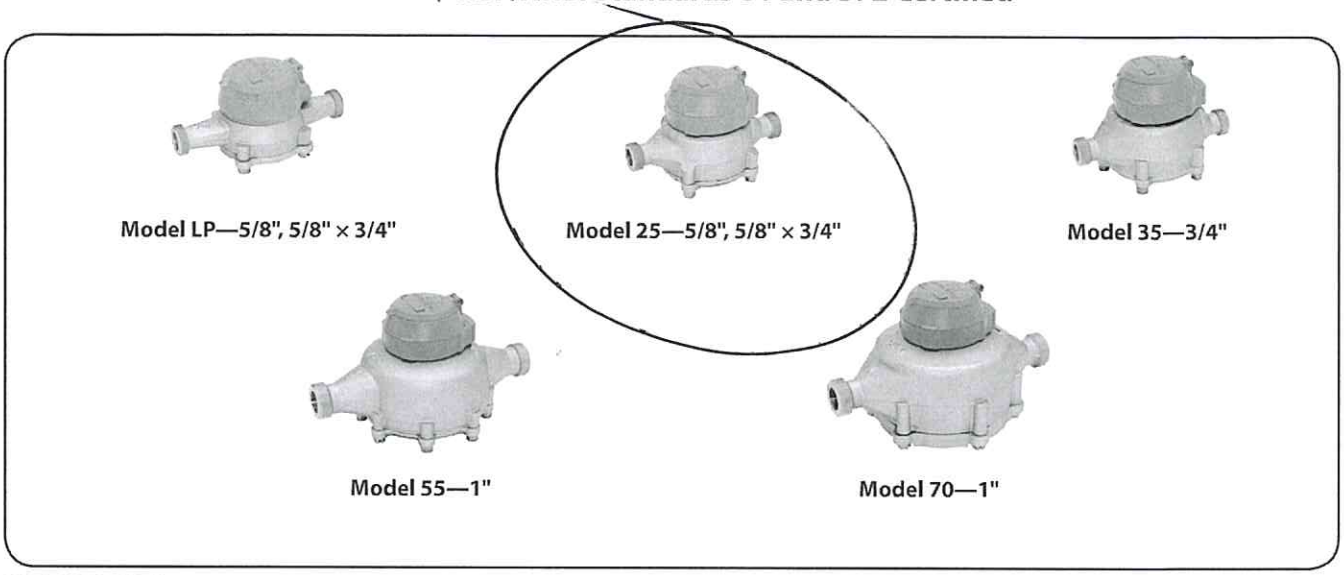

Model LP—5/8", 5/8" × 3/4"

Model 25—5/8", 5/8" × 3/4"

Model 35—3/4"

Model 55—1"

Model 70—1"

DESCRIPTION

The Recordall Disc Series meters meet or exceed the most recent revision of AWWA Standard C700 and are available in a lead-free bronze alloy. The meters comply with the lead-free provisions of the Safe Drinking Water Act, are certified to NSF/ANSI Standards 61 and 372 (Trade Designations: MLP-LL, M25-LL, M35-LL, M55-LL, M70-LL) and carry the NSF-61 mark on the housing. All components of the lead-free bronze alloy meter (housing, measuring element, seals, and so on) comprise the certified system.

Applications: For use in measurement of potable cold water in residential, commercial and industrial services where flow is in one direction only.

Operation: Water flows through the meter's strainer and into the measuring chamber where it causes the disc to nutate. The disc, which moves freely, nutates on its own ball, guided by a thrust roller. A drive magnet transmits the motion of the disc to a follower magnet located within the permanently sealed register. The follower magnet is connected to the register gear train. The gear train reduces the disc nutations into volume totalization units displayed on the register or encoder face.

Operating Performance: The Recordall Disc Series meters meet or exceed registration accuracy for the low flow rates (95%), normal operating flow rates (100 ± 1.5%), and maximum continuous operation flow rates as specifically stated in AWWA Standard C700.

Construction: Recordall Disc meter construction, which complies with ANSI/AWWA standard C700, consists of three basic components: meter housing, measuring chamber, and permanently sealed register or encoder. The meter is available in a lead-free bronze alloy with externally-threaded spuds. A corrosion-resistant engineered polymer material is used for the measuring chamber.

Magnetic Drive: Direct magnetic drive, through the use of high-strength magnets, provides positive, reliable and dependable register coupling for straight-reading or AMR/AMI meter reading options.

Tamper-Proof Features: Unauthorized removal of the register or encoder is inhibited by the option of a tamper detection seal wire screw, TORX® tamper-resistant seal screw or the proprietary tamper-resistant keyed seal screw. Each can be installed at the meter site or at the factory.

Maintenance: Badger Meter Recordall Disc Series meters are designed and manufactured to provide long-term service with minimal maintenance. When maintenance is required, it can be performed easily either at the meter installation or at any other convenient location.

To simplify maintenance, the register, measuring chamber, and strainer can be replaced without removing the meter housing from the installation. No change gears are required for accuracy calibration. Interchangeability of parts among like-sized meters and meter models also minimizes spare parts inventory investment. The built-in strainer has an effective straining area of twice the inlet size.

Connections: Tailpieces/Unions for installations of meters on various pipe types and sizes, including misaligned pipes, are available as an option.

Meter Spud and Connection Sizes

Model	Size Designation	×	"L" Laying Length	"B" Bore Dia.	Coupling Nut and Spud Thread	Tailpiece Pipe Thread (NPT)
LP	5/8"	×	7-1/2"	5/8"	3/4" (5/8")	1/2"
	5/8" x 3/4"	×	7-1/2"	5/8", 3/4"	1" (3/4")	3/4"
25	5/8"	×	7-1/2"	5/8"	3/4" (5/8")	1/2"
	5/8" x 3/4"	×	7-1/2"	5/8", 3/4"	1" (3/4")	3/4"
35	3/4"	×	7-1/2"	3/4"	1" (3/4")	3/4"
	3/4"	×	9"	3/4"	1" (3/4")	3/4"
	3/4" x 1"	×	9"	3/4"	1-1/4" (1")	1"
55	1"	×	10-3/4"	1"	1-1/4" (1")	1"
70	1"	×	10-3/4"	1"	1-1/4" (1")	1"

SPECIFICATIONS

	Model LP (5/8" & 5/8" × 3/4")	Model 25 (5/8" & 5/8" × 3/4")	Model 35 (3/4")	Model 55 (1")	Model 70 (1")
Typical Operating Range (100% ± 1.5%)	0.5…20 gpm (0.11…4.5 m³/hr)	0.5…25 gpm (0.11…5.7 m³/hr)	0.75…35 gpm (0.17…7.9 m³/hr)	1…55 gpm (0.23…12.5 m³/hr)	1.25…70 gpm (0.28…16 m³/hr)
Low Flow	0.25 gpm (0.057 m³/hr) Min. 95%	0.25 gpm (0.057 m³/hr) Min. 98.5%	0.375 gpm (0.085 m³/hr) Min. 97%	0.5 gpm (0.11 m³/hr) Min. 95%	0.75 gpm (0.17 m³/hr) Min. 95%
Maximum Continuous Operation	10 gpm (2.3 m³/hr)	15 gpm (3.4 m³/hr)	25 gpm (5.7 m³/hr)	40 gpm (9.1 m³/hr)	50 gpm (11.3 m³/hr)
Pressure Loss at Maximum Continuous Operation	**5/8" size:** 2 psi @ 10 gpm (0.14 bar @ 2.3 m³/hr) **5/8" × 3/4" size:** 1.5 psi @ 10 gpm (0.10 bar @ 2.3 m³/hr)	**5/8" size:** 3.5 psi @ 15 gpm (0.24 bar @ 3.4 m³/hr) **5/8" × 3/4" size:** 2.8 psi @ 15 gpm (0.19 bar @ 3.4 m³/hr)	5 psi @ 25 gpm (0.37 bar @ 5.7 m³/hr)	3.4 psi @ 40 gpm (0.23 bar @ 9.1 m³/hr)	6.5 psi @ 50 gpm (0.45 bar @ 11.3 m³/hr)
Maximum Operating Temperature	80° F (26° C)				
Maximum Operating Pressure	150 psi (10 bar)				
Measuring Element	Nutating disc, positive displacement				
Meter Connections	*Available in NL bronze and engineered polymer to fit spud thread bore diameter sizes:*				
	5/8" or 3/4" (DN 15 mm)	**5/8" size:** 5/8" (DN 15 mm) **5/8" × 3/4" size:** 3/4" (DN 15 mm)	3/4" (DN 20 mm)	1" (DN 25 mm)	1" (DN 25 mm)

MATERIALS

	Model LP (5/8" & 5/8" × 3/4")	Model 25 (5/8" & 5/8" × 3/4")	Model 35 (3/4")	Model 55 (1")	Model 70 (1")
Meter Housing	Lead-free bronze alloy				
Housing Bottom Plates	Lead-free bronze alloy, cast iron, engineered polymer		Cast iron, lead-free bronze alloy		
Measuring Chamber	Engineered polymer				
Disc	Engineered polymer				
Trim	Stainless steel				
Strainer	Engineered polymer				
Disc Spindle	Engineered polymer	Stainless steel	Stainless steel	Engineered polymer	Stainless steel
Magnet	Ceramic	Ceramic	Ceramic	Polymer bonded	Ceramic
Magnet Spindle	Engineered polymer	Stainless steel	Stainless steel	Engineered polymer	Stainless steel
Register Lid and Shroud	Engineered polymer, bronze				

DIMENSIONS

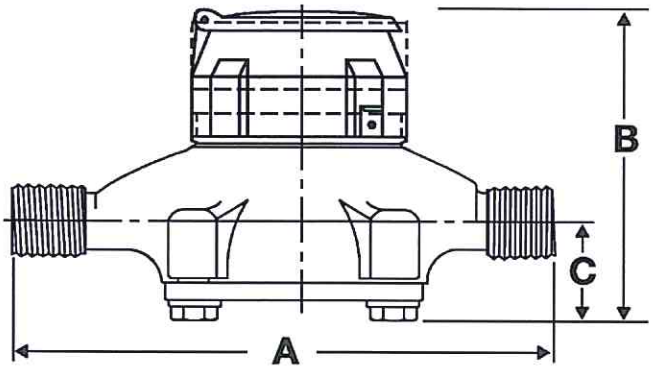

Meter Size	Model	A Laying Length	B Height Reg.	C Centerline Base	Width	Approx. Shipping Weight
5/8" and 5/8" x 3/4" (15 mm)	LP	7-1/2" (190 mm)	3.70" (94 mm)	1.26" (32 mm)	3.75" (95 mm)	3 lb (1.4 kg)
5/8" (15 mm)	25	7-1/2" (190 mm)	4-15/16" (125 mm)	1-11/16" (42 mm)	4-1/4" (108 mm)	4-1/2 lb (2 kg)
5/8" x 3/4" (15 mm)		7-1/2" (190 mm)	4-15/16" (125 mm)	1-11/16" (42 mm)	4-1/4" (108 mm)	4-1/2 lb (2 kg)
3/4" (20 mm)	35	7-1/2" (190 mm)	5-1/4" (133 mm)	1-5/8" (41 mm)	5" (127 mm)	5-1/2 lb (2.5 kg)
3/4" (20 mm)		9" (229 mm)	5-1/4" (133 mm)	1-5/8" (41 mm)	5" (127 mm)	5-3/4 lb (2.6 kg)
3/4" x 1" (20 mm)		9" (229 mm)	5-1/4" (133 mm)	1-5/8" (41 mm)	5" (127 mm)	6 lb (2.7 kg)
1" (25 mm)	55	10-3/4" (273 mm)	6" (152 mm)	2-1/32" (52 mm)	6-1/4" (159 mm)	8-3/4 lb (3.9 kg)
1" (25 mm)	70	10-3/4" (273 mm)	6-1/2" (165 mm)	2-5/16" (59 mm)	7-3/4" (197 mm)	11-1/2 lb (5.2 kg)

REGISTERS / ENCODERS

Standard—Sweep-Hand Registration

The standard register is a straight-reading, permanently sealed magnetic drive register. Dirt, moisture, tampering and lens fogging problems are eliminated. The register has a six-odometer wheel totalization display, 360° test circle with center sweep hand, and flow finder to detect leaks. Register gearing is made of self-lubricating engineered polymer, which minimizes friction and provides long life. The multi-position register simplifies meter installation and reading. The register capacity is 10,000,000 gallons (1,000,000 ft³, 100,000 m³).

A Model 25 register is used in the following example:

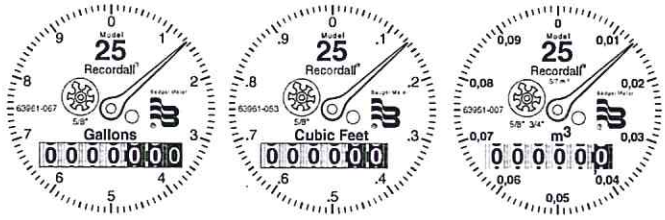

Model	Gallon	Cubic Feet	Cubic Meter
LP	10	1	0.1
25 (5/8")	10	1	0.1/0.01
25 (5/8" x 3/4")	10	1	0.1/0.01
35	10	1	0.1
55	10	1	0.1
70	10	1	0.1

Optional—Encoders for AMR/AMI Reading Solutions

AMR/AMI solutions are available for all Recordall Disc Series meters. All reading options can be removed from the meter without disrupting water service. Badger Meter encoders provide years of reliable, accurate readings for a variety of applications and are also available pre-wired to Badger Meter approved AMR/AMI solutions. See details at **www.badgermeter.com**.

PRESSURE LOSS CHARTS

Rate of Flow in Gallons per Minute

Model LP 5/8"

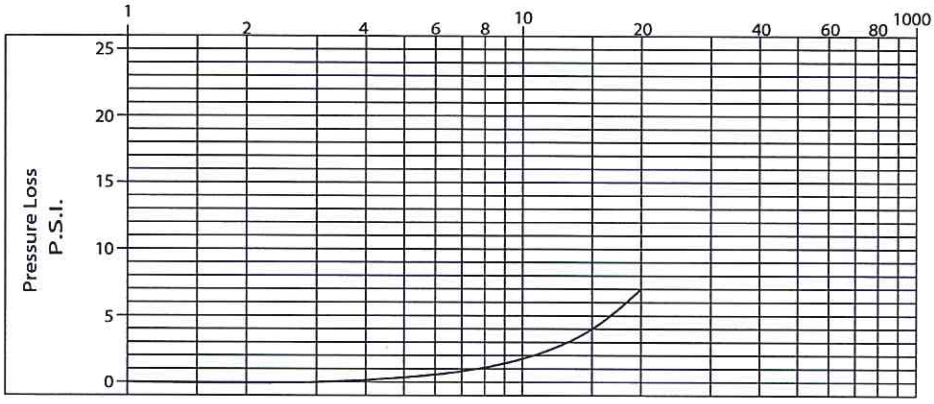

Model LP 5/8" x 3/4"

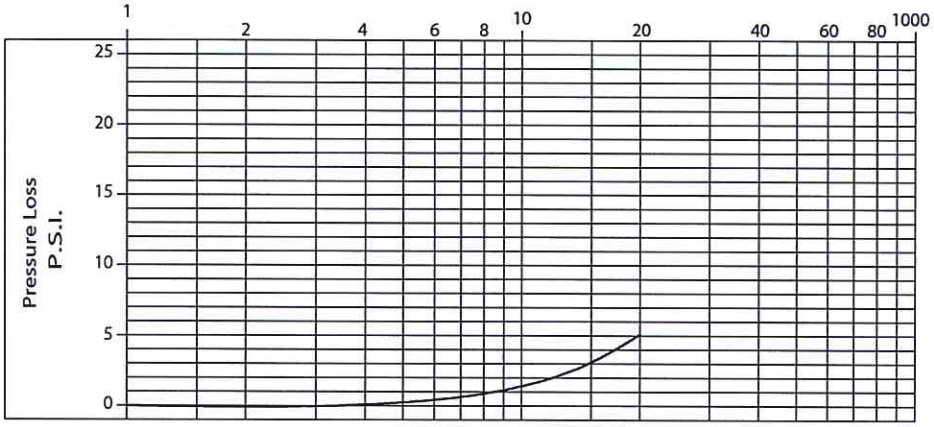

Model 25 5/8"

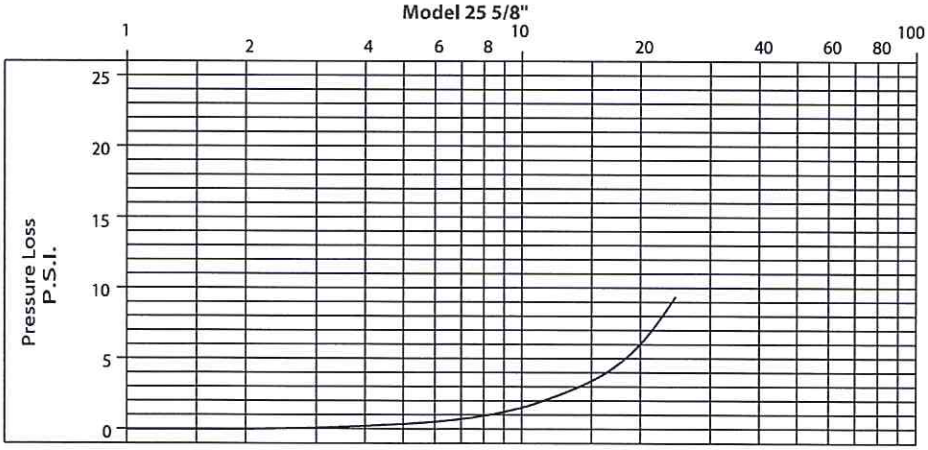

PRESSURE LOSS CHARTS (CONTINUED)

Rate of Flow in Gallons per Minute

Model 25 5/8" × 3/4"

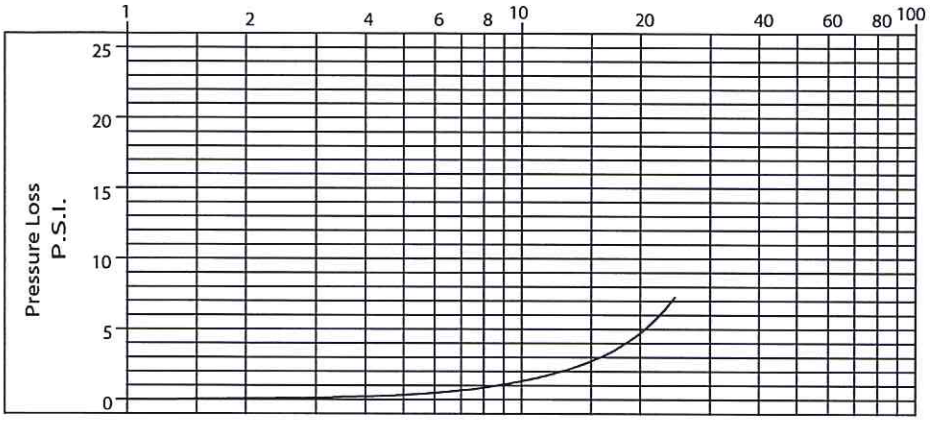

Model 35 3/4"

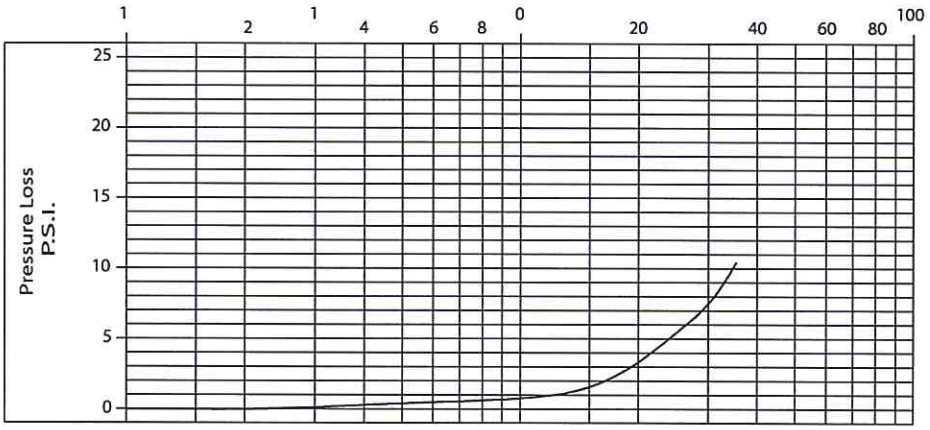

Model 55 1"

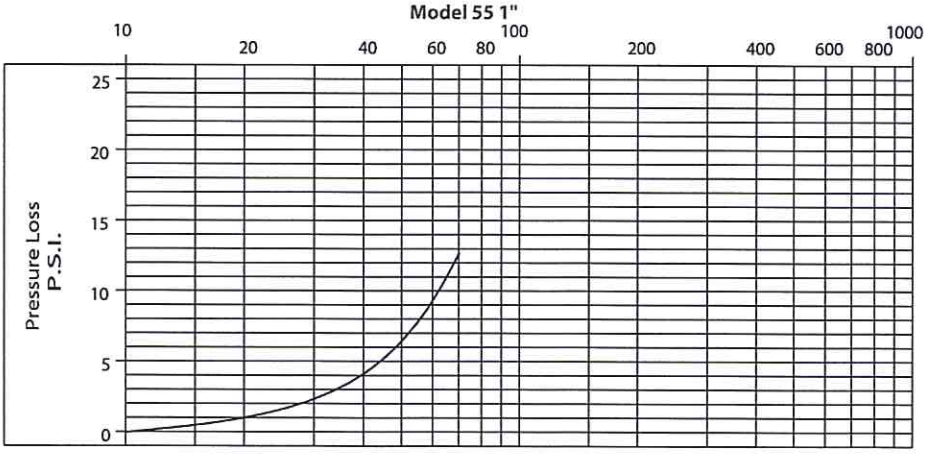

PRESSURE LOSS CHARTS (CONTINUED)

Rate of Flow in Gallons per Minute

Model 70 1"

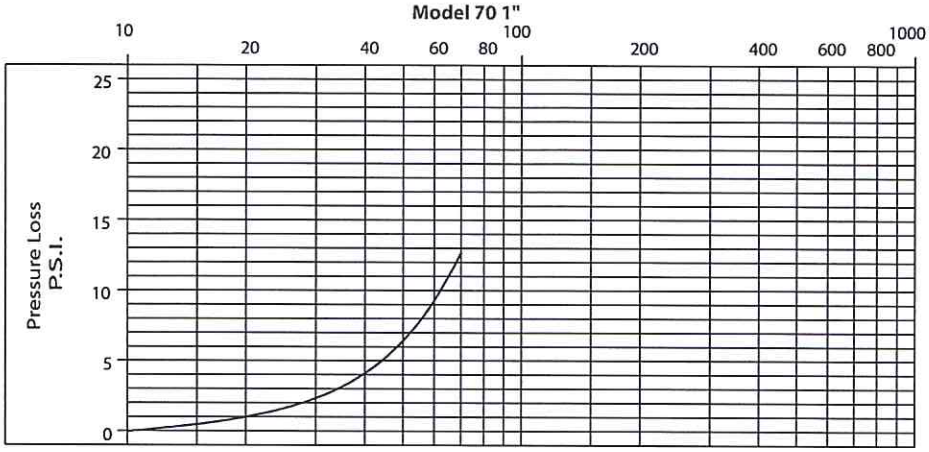

ACCURACY CHARTS

Model LP 5/8"

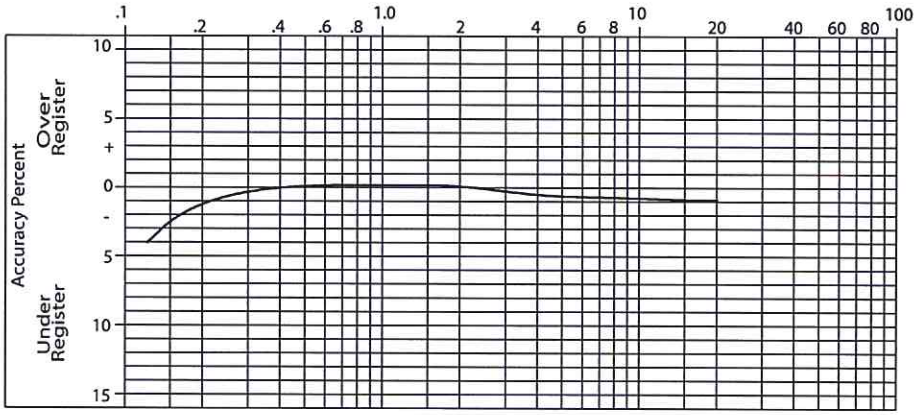

Model LP 5/8" x 3/4"

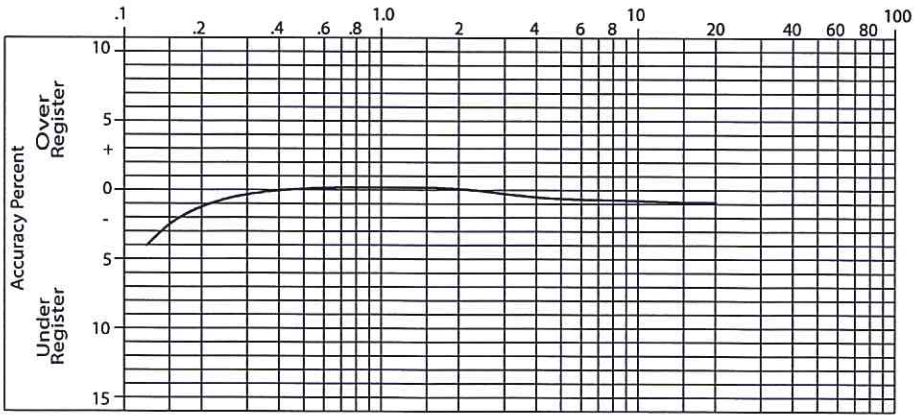

ACCURACY CHARTS (CONTINUED)

Model 25 5/8"

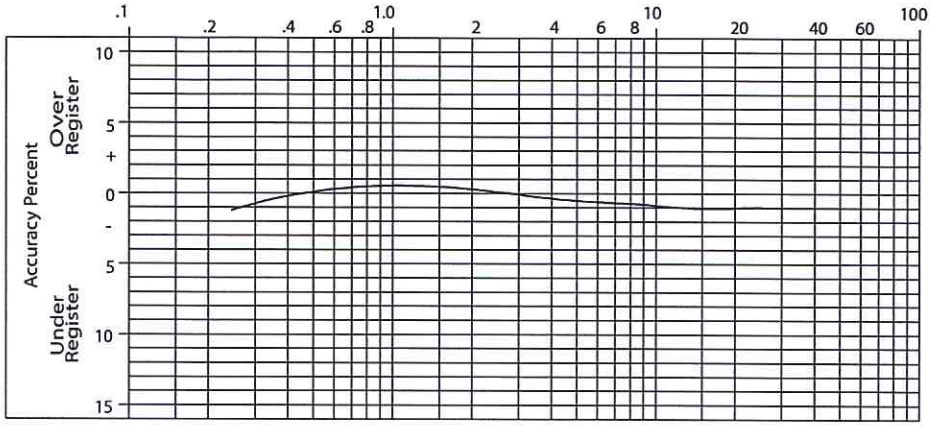

Model 25 5/8" x 3/4"

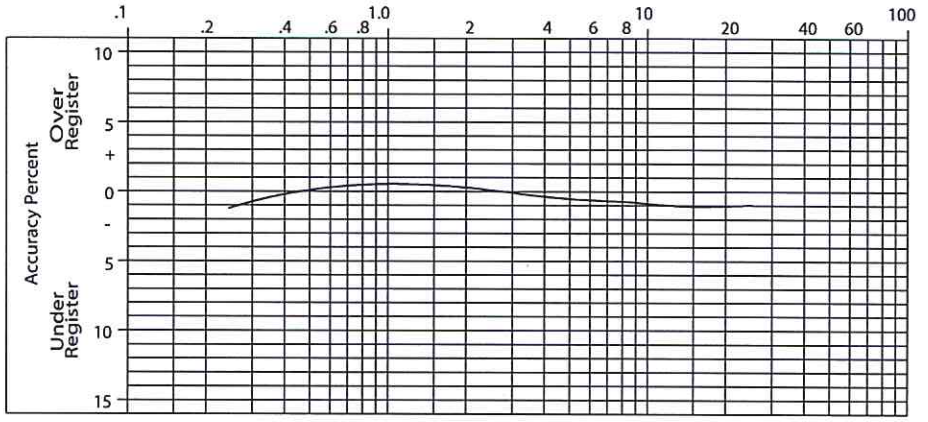

Model 35 3/4"

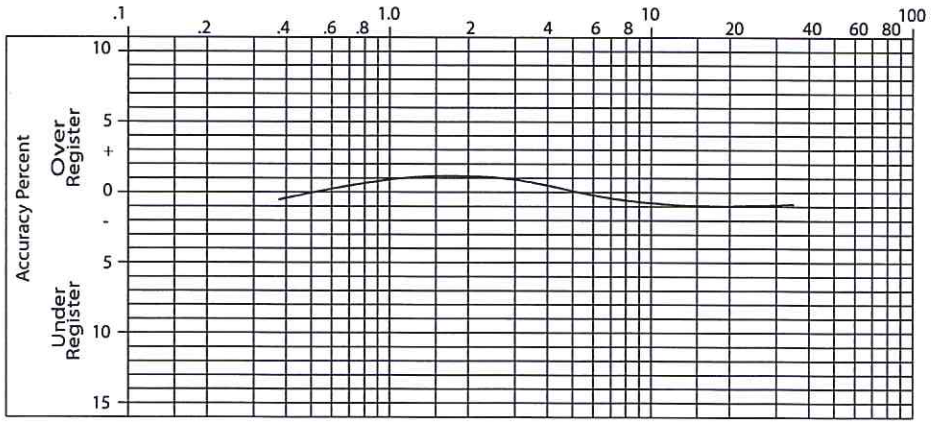

ACCURACY CHARTS (CONTINUED)

Model 55 1"

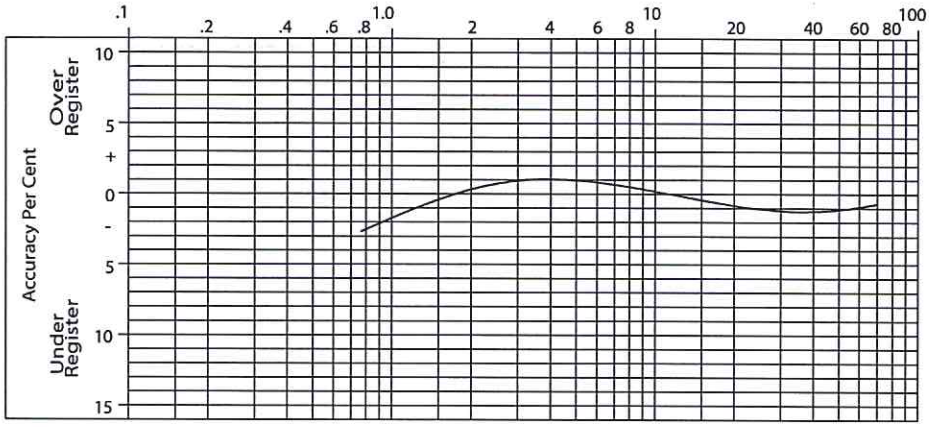

Model 70 1"

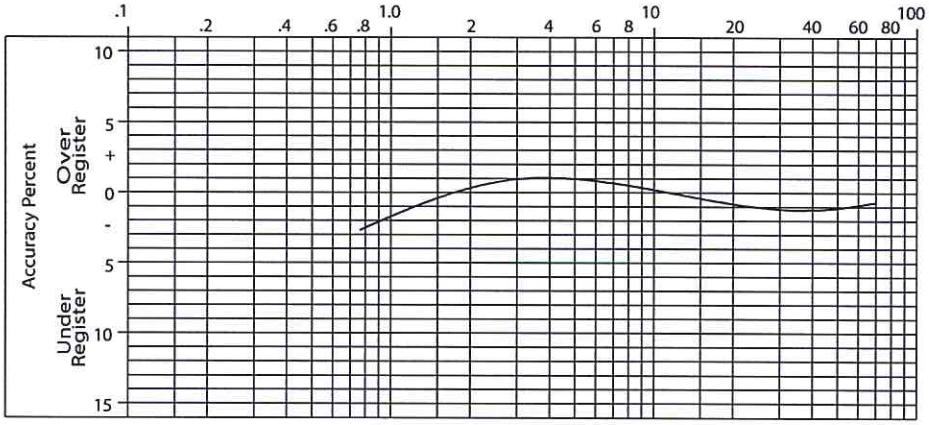

Making Water Visible®

MAKING WATER VISIBLE and RECORDALL are registered trademarks of Badger Meter, Inc. Other trademarks appearing in this document are the property of their respective entities. Due to continuous research, product improvements and enhancements, Badger Meter reserves the right to change product or system specifications without notice, except to the extent an outstanding contractual obligation exists. © 2014 Badger Meter, Inc. All rights reserved.

www.badgermeter.com

The Americas | Badger Meter | 4545 West Brown Deer Rd | PO Box 245036 | Milwaukee, WI 53224-9536 | 800-876-3837 | 414-355-0400
México | Badger Meter de las Americas, S.A. de C.V. | Pedro Luis Ogazón N°32 | Esq. Angelina N°24 | Colonia Guadalupe Inn | CP 01050 | México, DF | México | +52-55-5662-0882
Europe, Middle East and Africa | Badger Meter Europa GmbH | Nurtinger Str 76 | 72639 Neuffen | Germany | +49-7025-9208-0
Europe, Middle East Branch Office | Badger Meter Europe | PO Box 341442 | Dubai Silicon Oasis, Head Quarter Building, Wing C, Office #C209 | Dubai / UAE | +971-4-371 2503
Czech Republic | Badger Meter Czech Republic s.r.o. | Maříkova 2082/26 | 621 00 Brno, Czech Republic | +420-5-41420411
Slovakia | Badger Meter Slovakia s.r.o. | Racianska 109/B | 831 02 Bratislava, Slovakia | +421-2-44 63 83 01
Asia Pacific | Badger Meter | 80 Marine Parade Rd | 21-06 Parkway Parade | Singapore 449269 | 65-63464836
China | Badger Meter | 7-1202 | 99 Hangzhong Road | Minhang District | Shanghai | China 201101 | +86-21-5763 5412

Legacy Document Numbers: RDM-D5-00062, 63, 64, 65, 66, and 73

Badger Meter | Lead-Free Bronze Disc Meters

PRODUCTS COVERED

This warranty shall apply to all Recordall® Lead-Free Bronze Disc Meters, models LP through 170, when used to measure potable water, including the registers and encoders used with these meters (collectively "Product") sold on or after November 1, 2012. This warranty is extended only to utilities, municipalities, other commercial users and authorized Badger Meter, Inc. distributors, hereafter referred to as "Customer" and does NOT apply to consumers or any person or entity who is not an original customer of Badger Meter or its authorized distributors.

MATERIALS AND WORKMANSHIP

Badger Meter warrants Product to be free from defects in materials and workmanship appearing within the following time frames and those listed in the table below:

Housings
Twenty-five (25) years and six (6) months after shipment from Badger Meter.

Local Registers Supplied with the Meters Listed Herein
Twenty-five (25) years and six (6) months after shipment from Badger Meter.

	AWWA New Meter Accuracy	AWWA Repaired Meter Accuracy (AWWA M6 Manual)	Badger Meter Extended Low Flow Meter Accuracy
Recordall Meter Model, Size	*The meter product will meet or exceed new meter accuracy standards set forth in AWWA Standard C700 for the following periods:*	*The meter product will meet or exceed repaired meter accuracy standards set forth in AWWA Manual M-6, Chapter 5, Table 5.3 for the following periods:*	*Badger Meter further warrants the meter product to meet or exceed the following extended low flow accuracies in excess of AWWA standard:*
Model LP, 5/8" and 5/8" x 3/4"	Five (5) years from date of shipment or registration of 750,000 gallons, whichever occurs first.	Fifteen (15) years from date of shipment or registration of 2,500,000 gallons, whichever occurs first, with a 20 gpm safe maximum operating capacity and a 10 gpm maximum rate for continuous operation.	—
Model 25, 5/8" and 5/8" x 3/4"	Five (5) years from date of shipment or registration of 750,000 gallons, whichever occurs first.	Fifteen (15) years from date of shipment or registration of 2,500,000 gallons, whichever occurs first, with a 25 gpm safe maximum operating capacity and a 15 gpm maximum rate for continuous operation.	Badger Meter warrants Product low flow accuracy of 98.5% at a rate of 1/4 gpm and low flow accuracy of 95.0% at a rate of 1/8 gpm for five (5) years from date of shipment or registration of 675,000 gallons, whichever occurs first.
Model 35, 3/4"	Five (5) years from date of shipment or registration of 750,000 gallons, whichever occurs first.	Fifteen (15) years from date of shipment or registration of 2,500,000 gallons, whichever occurs first, with a 35 gpm safe maximum operating capacity and a 25 gpm maximum rate for continuous operation.	Badger Meter warrants Product low flow accuracy of 97% at a rate of 3/8 gpm for five (5) years from date of shipment or registration of 675,000 gallons, whichever occurs first.
Model 55, 1"	Five (5) years from date of shipment or registration of 1,000,000 gallons, whichever occurs first.	Fifteen (15) years from date of shipment or registration of 3,000,000 gallons, whichever occurs first, with a 55 gpm safe maximum operating capacity and a 40 gpm maximum rate for continuous operation.	Badger Meter warrants Product low flow accuracy of 95% at a rate of 1/2 gpm for three (3) years from date of shipment or registration of 575,000 gallons, whichever occurs first.
Model 70, 1"	Five (5) years from date of shipment or registration of 1,100,000 gallons, whichever occurs first.	Fifteen (15) years from date of shipment or registration of 3,250,000 gallons, whichever occurs first, with a 70 gpm safe maximum operating capacity and a 50 gpm maximum rate for continuous operation.	Badger Meter warrants Product low flow accuracy of 95% at a rate of 3/4 gpm for three (3) years from date of shipment or registration of 1,100,000 gallons, whichever occurs first.
Model 120, 1-1/2"	Two (2) years from date of shipment or registration of 1,600,000 gallons, whichever occurs first.	Fifteen (15) years from date of shipment or registration of 5,600,000 gallons, whichever occurs first, with a 120 gpm safe maximum operating capacity and a 80 gpm maximum rate for continuous operation.	Badger Meter warrants Product low flow accuracy of 95% at a rate of 1-1/4 gpm for two (2) years from date of shipment or registration of 1,440,000 gallons, whichever occurs first.
Model 170, 2"	Two (2) years from date of shipment or registration of 2,100,000 gallons, whichever occurs first.	Fifteen (15) years from date of shipment or registration of 10,400,000 gallons, whichever occurs first, with a 170 gpm safe maximum operating capacity and a 100 gpm maximum rate for continuous operation.	Badger Meter warrants Product low flow accuracy of 95% at a rate of 1-1/2 gpm for two (2) years from date of shipment or registration of 1,890,000 gallons, whichever occurs first.

PRODUCT RETURNS

Any Product proved to the satisfaction of Badger Meter to have failed the foregoing warranties will, at the option of Badger Meter, be repaired or replaced without charge to the Customer. The obligation hereunder of Badger Meter shall be limited to such repair and replacement and shall be conditioned upon Badger Meter receiving written notice of any alleged defect within ten (10) days after its discovery. This exclusive remedy shall not be deemed to have failed its essential purpose so long as Badger Meter is willing and able to replace defective products or issue a credit to purchaser within a reasonable time of proof to Badger Meter that a defect is involved. Product returns must be shipped by the Customer prepaid F.O.B. to the nearest Badger Meter factory or distribution center. The Customer shall be responsible for all direct and indirect costs associated with removing original product and reinstalling the repaired or replacement Product.

LIMITS OF LIABILITY

This warranty shall not apply to Product repaired or altered by any party other than Badger Meter. The foregoing warranty applies only to the extent that the Product is installed, serviced and operated strictly in accordance with AWWA Standard C700 and AWWA M6 Manual. The warranty shall not apply and shall be void with respect to Product exposed to conditions other than those detailed in Badger Meter Product technical literature and Installation and Operation Manuals (IOMs), or which have been subject to vandalism, negligence, accident, acts of God, improper installation, operation or repair, alteration, or other circumstances which are beyond the reasonable control of Badger Meter. With respect to Product not manufactured by Badger Meter, the warranty obligations of Badger Meter shall in all respects conform and be limited to the warranty extended to Badger Meter by the supplier.

THE FOREGOING WARRANTIES ARE EXCLUSIVE AND IN LIEU OF ALL OTHER EXPRESS AND IMPLIED WARRANTIES WHATSOEVER, INCLUDING BUT NOT LIMITED TO IMPLIED WARRANTIES OF MERCHANTABILITY AND FITNESS FOR A PARTICULAR PURPOSE (except warranties of title).

Any description of the Product, whether in writing or made orally by Badger Meter or Badger Meter agents, specifications, samples, models, bulletins, drawings, diagrams, engineering sheets or similar materials used in connection with any Customer's order are for the sole purpose of identifying the Product and shall not be construed as an express warranty. Any suggestions by Badger Meter or Badger Meter agents regarding use, application, or suitability of the Product shall not be construed as an express warranty unless confirmed to be such in writing by Badger Meter.

Exclusion of Consequential Damages and Disclaimer of Other Liability. The liability of Badger Meter with respect to breaches of the foregoing warranty shall be limited as stated herein. The liability of Badger Meter shall in no event exceed the contract price. **BADGER METER SHALL NOT BE SUBJECT TO AND DISCLAIMS: (1) ANY OTHER OBLIGATIONS OR LIABILITIES ARISING OUT OF BREACH OF CONTRACT OR OF WARRANTY, (2) ANY OBLIGATIONS WHATSOEVER ARISING FROM TORT CLAIMS (INCLUDING NEGLIGENCE AND STRICT LIABILITY) OR ARISING UNDER OTHER THEORIES OF LAW WITH RESPECT TO PRODUCTS SOLD OR SERVICES RENDERED BY BADGER METER, OR ANY UNDERTAKINGS, ACTS OR OMISSIONS RELATING THERETO, AND (3) ALL CONSEQUENTIAL, INCIDENTAL, AND CONTINGENT DAMAGES WHATSOEVER.**

Recordall is a registered trademark of Badger Meter, Inc. Other trademarks appearing in this document are the property of their respective entities. Due to continuous research, product improvements and enhancements, Badger Meter reserves the right to change product or system specifications without notice, except to the extent an outstanding contractual obligation exists. © 2014 Badger Meter, Inc. All rights reserved.

www.badgermeter.com

The Americas | Badger Meter | 4545 West Brown Deer Rd | PO Box 245036 | Milwaukee, WI 53224-9536 | 800-876-3837 | 414-355-0400
México | Badger Meter de las Americas, S.A. de C.V. | Pedro Luis Ogazón N°32 | Esq. Angelina N°24 | Colonia Guadalupe Inn | CP 01050 | México, DF | México | +52-55-5662-0882
Europe, Middle East and Africa | Badger Meter Europa GmbH | Nurtinger Str 76 | 72639 Neuffen | Germany | +49-7025-9208-0
Czech Republic | Badger Meter Czech Republic s.r.o. | Marikova 2082/26 | 621 00 Brno, Czech Republic | +420-5-41420411
Slovakia | Badger Meter Slovakia s.r.o. | Racianska 109/B | 831 02 Bratislava, Slovakia | +421-2-44 63 83 01
Asia Pacific | Badger Meter | 80 Marine Parade Rd | 21-04 Parkway Parade | Singapore 449269 | +65-63464836
China | Badger Meter | 7-1202 | 99 Hangzhong Road | Minhang District | Shanghai | China 201101 | +86-21-5763 5412

Legacy Document Number: RD-W-I-AWWA-EN

Badger Meter | HR | E LCD Encoder

DESCRIPTION

Applications: The High Resolution Encoder (HR-E LCD) is a fully electronic, solid-state encoder with no moving parts. It is designed for use with all current Badger Meter Recordall® Disc, Turbo Series, Compound Series, Combo Series and Fire Service meters and assemblies. The HR-E LCD provides connectivity with Badger Meter ORION® and GALAXY® AMR/AMI endpoints and other AMR/AMI technology solutions approved by Badger Meter.

Note: For more detailed information, refer to LCD-IOM-01-EN.

Field Programmable: The HR-E LCD comes standard as factory-programmed to customer specifications, with the option for field-programming the unit of measure, meter type, meter model, billing units, and rate-of-flow time and units. Programming is performed through the IR port via a computer.

Electronic Resolution: Encoded output from the HR-E LCD includes nine-digit resolution.

Status Indicators: Status indicators are sent as part of the encoder extended message to AMR/AMI systems such as ORION ME and SE endpoints that are capable of receiving an extended message. The details can also be read through an IR interface.

Mounting: Icons on the HR-E LCD encoder face indicate encoder status and alarm conditions. The fully potted encoder assembly has a bayonet mount compatible with all Recordall Disc, Turbo Series, Compound Series, Combo Series and Fire Series meters and assemblies. The bayonet mount positions the encoder in any of four orientations for visual reading convenience. The HR-E LCD can be removed from the meter without disrupting water service.

Magnetic Drive Communication: The HR-E LCD detects movement of the wet side meter magnet with magnetic sensors to provide reliable and dependable encoded communication.

Tamper-resistant Features:
Unauthorized removal of the HR-E LCD is inhibited by a tamper-resistant Torx seal screw. Torx seal screws are provided as standard accessories. Optional proprietary tamper-proof screws are also available.

Magnetic sensors detect and report an attempted encoder removal. In addition, the HR-E LCD encoder is resistant to magnetic tampering. The encoder detects an attempted tamper—as well as encoder removal—and sends a tamper alarm in either situation. Approved endpoints that are capable of receiving the alarms, such as ORION ME and SE can then report the tamper condition to the meter reading software.

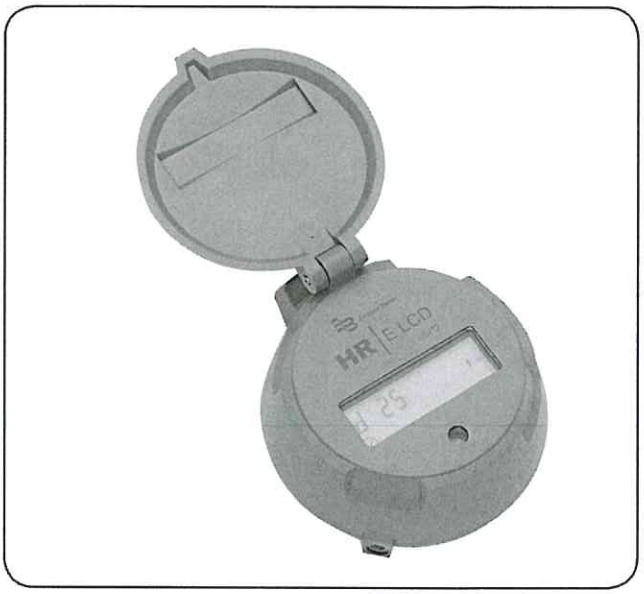

SPECIFICATIONS

Encoder type	Straight reading, permanently sealed, electronic LCD absolute encoder with field-programmable option
Encoder display	Status indicators, unit of measure, billing units, automatic toggle between 9-digit and 6-digit consumption (segmented leak detector in this mode), rate of flow, meter model
Unit of measure	U.S. gallons, Imperial gallons, cubic feet, cubic meters, and liters clearly identified on register face
Flow rate	Seconds, minutes, and hours
Numerals	7 mm (0.28") high
Weight	11 ounces
Humidity	0…100% condensing
Temperature	Storage: – 40…60° C (– 40…140° F) Max. ambient for 1 hr: 72° C (150° F) Electronics & Display: –10…60° C (14…140° F)
Status indicators	Electronic and visual icons for: Meter functioning correctly, meter alarm (indicates temperature limits exceeded, magnetic tamper or encoder removal), reverse flow, suspected leak, 30-day no usage, end of battery life
Signal output	Industry standard ASCII format
Signal type	Three-wire synchronous
Battery	Lithium thionyl chloride AA cell, fully encapsulated within encoder housing
Battery Life	20 years (calculated)

Product Data Sheet

Construction: The housing of the HR-E LCD is constructed of an engineered polymer enclosure and a polycarbonate lens. For long-term performance, the enclosure is fully encapsulated, weatherproof, and UV-resistant to withstand harsh environments and to protect the electronics in flooded or submerged pit applications. An epoxy potting (patent pending) comprises the encoder bottom. Due to this unique sealing, the HR-E LCD exceeds all applicable requirements of AWWA Standard C706 and C707.

Wire Connections: The HR-E LCD is provided as either a factory-wired assembly or as an encoder with pre-sized wire harness available for connection in the field. Standardardized lead lengths are 3, 10, 25, and 75 feet.

308 Connector: The Badger Meter 308 In-line connector is an optional feature that allows connectivity to an AMR/AMI devices, without the need for a field splice kit.

Operating Characteristics: The HR-E LCD is shipped in storage mode so a meter status alarm is not triggered. In storage mode, the meter model is displayed. Upon sensing one revolution of the meter magnet, the HR-E LCD goes into normal operation mode. The display then automatically toggles between these four modes:

- 9-digit consumption displays for 30 seconds.
- 6-digit consumption (segmented leak detector in this mode) displays for 20 seconds.
- Rate of flow displays for 5 seconds.
- Meter model displays for 5 seconds.

DIMENSIONAL DRAWINGS

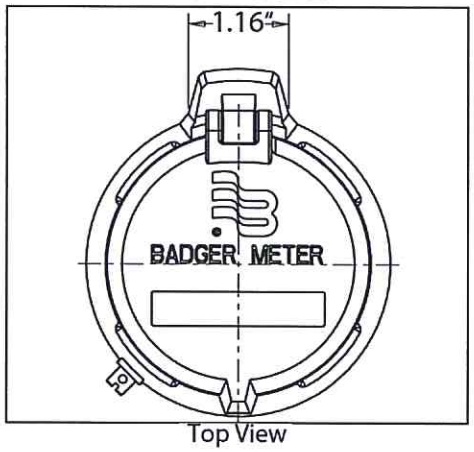

Top View

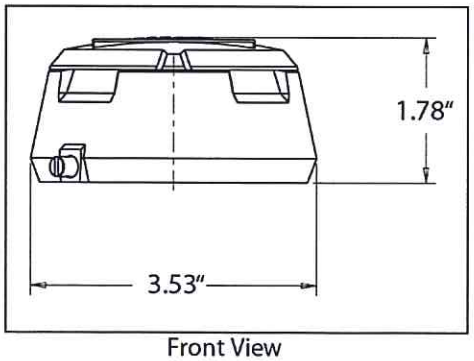

Front View

MEASUREMENT RESOLUTION

The electronic encoder output resolution of the HR-E LCD Encoder is as noted below.

Recordall Disc Series	Size	9-dial encoder output (gal)	9-dial encoder output (ft^3)	9-dial encoder output (m^3)
LP	5/8", 5/8 x 3/4"	0.01	0.001	0.0001
M25	5/8", 5/8 x 3/4"	0.01	0.001	0.0001
M35	3/4"	0.01	0.001	0.0001
M40	1"	0.01	0.001	0.0001
M55	1"	0.01	0.001	0.0001
M70	1"	0.01	0.001	0.0001
M120	1-1/2"	0.1	0.01	0.001
M170	2"	0.1	0.01	0.001

Recordall Turbo Series	Size	9-dial encoder output (gal)	9-dial encoder output (ft^3)	9-dial encoder output (m^3)
T160	1-1/2"	0.1	0.01	0.001
T200	2"	0.1	0.01	0.001
T450	3"	0.1	0.01	0.001
T1000	4"	0.1	0.01	0.001
T2000	6"	1	0.1	0.01
T3500	8"	1	0.1	0.01
T5500	10"	1	0.1	0.01
T6200	12"	10	1	0.01
T6600	16"	10	1	0.01
T10000	20"	10	1	0.01

Recordall Compound Series	Size	9-dial encoder output (gal)	9-dial encoder output (ft^3)	9-dial encoder output (m^3)
High Side T200	2"	0.1	0.01	0.001
Low Side M25	2"	0.01	0.001	0.0001
High Side T450	3"	0.1	0.01	0.001
Low Side M25	3"	0.01	0.001	0.0001
High Side T1000	4"	0.1	0.01	0.001
Low side M35	4"	0.01	0.001	0.0001
High Side T2000	6"	1	0.1	0.01
Low Side M35	6"	0.01	0.001	0.0001
High Side T3500	8"	1	0.1	0.01
Low side M120	8"	0.1	0.01	0.001

NOTE: For Fire Service Meters and Assemblies, please refer to appropriate Disc and TSM information provided above.

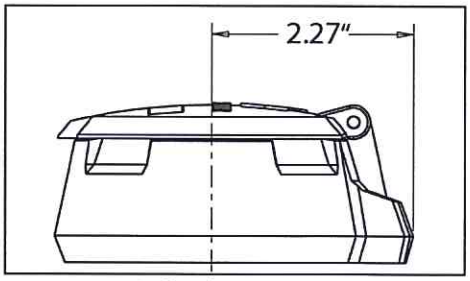

Left Side View

GALAXY, ORION and RECORDALL are registered trademarks of Badger Meter, Inc. Other trademarks appearing in this document are the property of their respective entities.
Due to continuous research, product improvements and enhancements, Badger Meter reserves the right to change product or system specifications without notice, except to the extent an outstanding contractual obligation exists. © 2013 Badger Meter, Inc. All rights reserved.

www.badgermeter.com

The Americas | Badger Meter | 4545 West Brown Deer Rd | PO Box 245036 | Milwaukee, WI 53224-9536 | 800-876-3837 | 414-355-0400
México | Badger Meter de las Americas, S.A. de C.V. | Pedro Luis Ogazón N°32 | Esq. Angelina N°24 | Colonia Guadalupe Inn | CP 01050 | Mexico, DF | México | +52-55-5662-0882
Europe, Middle East and Africa | Badger Meter Europa GmbH | Nurtinger Str 76 | 72639 Neuffen | Germany | +49-7025-9208-0
Czech Republic | Badger Meter Czech Republic s.r.o. | Mařikova 2082/26 | 621 00 Brno, Czech Republic | +420-5-41420411
Slovakia | Badger Meter Slovakia s.r.o. | Racianska 109/B | 831 02 Bratislava, Slovakia | +421-2-44 63 83 01
Asia Pacific | Badger Meter | 80 Marine Parade Rd | 21-04 Parkway Parade | Singapore 449269 | +65-6246483e
China | Badger Meter | 7-1202 | 99 Hangzhong Road | Minhang District | Shanghai | China 201101 | +86-21-5763 5412

Badger Meter

HR-E LCD

High Resolution LCD Encoder

PRODUCTS COVERED

The Badger Meter warranty shall apply to the High Resolution LCD Encoder (HR-E LCD) ("Product"), sold on or after December 3, 2012. The warranty is extended only to utilities, municipalities, or other commercial users, and authorized Badger Meter, Inc. (Badger Meter®) distributors, hereinafter referred to as "Customer" and does NOT apply to consumers or any person or entity who is not an original customer of Badger Meter or its authorized distributors.

MATERIALS AND WORKMANSHIP

Badger Meter warrants the Product to be free from defects in materials and workmanship appearing within the earlier of either: Ten (10) years after installation; or ten (10) years and six (6) months after shipment from Badger Meter.

PRODUCT RETURNS

Product failures must be proven and verified to the satisfaction of Badger Meter. The Badger Meter obligation hereunder shall be limited to such repair and replacement and shall be conditioned upon Badger Meter receiving written notice of any asserted defect within 10 (ten) days after its discovery. If the defect arises and a valid claim is received within the Warranty Period, at its option, Badger Meter will either (1) exchange the Product with a new, used or refurbished Product that is at least functionally equivalent to the original Product, or (2) refund the purchase price of the Product.

Product returns must be shipped by the Customer prepaid F.O.B. to the nearest Badger Meter factory or distribution center. The Customer shall be responsible for all direct and indirect costs associated with removing the original Product and reinstalling the repaired or replacement Product. A replacement Product assumes the remaining warranty of the original Product or ninety (90) days from the date of replacement, whichever provides longer coverage.

LIMITS OF LIABILITY

This warranty shall not apply to any Product repaired or altered by any party other than Badger Meter. The foregoing warranty applies only to the extent that the Product is installed, serviced and operated strictly in accordance with Badger Meter instructions. The warranty shall not apply and shall be void with respect to a Product exposed to conditions other than those detailed in applicable technical literature and Installation and Operation Manuals (IOMs) or which have been subject to vandalism, negligence, accident, acts of God, improper installation, operation or repair, alteration, or other circumstances which are beyond the reasonable control of Badger Meter.

With respect to products not manufactured by Badger Meter, the warranty obligations of Badger Meter shall in all respects conform and be limited to the warranty extended to Badger Meter by the supplier.

THE FOREGOING WARRANTIES ARE EXCLUSIVE AND IN LIEU OF ALL OTHER EXPRESS AND IMPLIED WARRANTIES WHATSOEVER, INCLUDING BUT NOT LIMITED TO IMPLIED WARRANTIES OF MERCHANTABILITY AND FITNESS FOR A PARTICULAR PURPOSE (except warranties of title).

Any description of a Product, whether in writing or made orally by Badger Meter or its agents, specifications, samples, models, bulletins, drawings, diagrams, engineering sheets or similar materials used in connection with any Customer's order are for the sole purpose of identifying the Product and shall not be construed as an express warranty. Any suggestions by Badger Meter or its agents regarding use, application or suitability of the Product shall not be construed as an express warranty unless confirmed to be such, in writing, by Badger Meter.

EXCLUSION OF CONSEQUENTIAL DAMAGES AND DISCLAIMER OF OTHER LIABILITY

Badger Meter liability with respect to breaches of the foregoing warranty shall be limited as stated herein. Badger Meter liability shall in no event exceed the contract price. BADGER METER SHALL NOT BE SUBJECT TO AND DISCLAIMS: (1) ANY OTHER OBLIGATIONS OR LIABILITIES ARISING OUT OF BREACH OF CONTRACT OR OF WARRANTY, (2) ANY OBLIGATIONS WHATSOEVER ARISING FROM TORT CLAIMS (INCLUDING NEGLIGENCE AND STRICT LIABILITY) OR ARISING UNDER OTHER THEORIES OF LAW WITH RESPECT TO PRODUCTS SOLD OR SERVICES RENDERED BY BADGER METER, OR ANY UNDERTAKINGS, ACTS OR OMISSIONS RELATING THERETO, AND (3) ALL CONSEQUENTIAL, INCIDENTAL AND CONTINGENT DAMAGES WHATSOEVER.

Badger Meter

ORION®

Trimble® Ranger 3

OVERVIEW

The Trimble® Ranger 3 is a full-featured, handheld data collection computer. It combines a Windows® mobile operating system, ergonomic keypad and military-grade durability, providing a full day of continuous meter reading. The Trimble Ranger 3 handheld is compatible with manual, touch and ORION® endpoint systems.

OPERATION

System: The Trimble Ranger 3 handheld uses the Windows Mobile 6.5 Professional operating system with the Badger Meter suite of handheld software.

Display: A large 4.2 inch, high resolution color, resistive touch screen with LED backlight supports reading in both sunlight and darkness.

Control: The Trimble Ranger 3 handheld features ergonomic navigation with versatile alpha and numeric keypads that are easy to use, even when wearing gloves. The user may also operate the handheld using the easy-to-navigate touch screen controls.

Power: A lithium ion rechargeable battery pack powers the Trimble Ranger 3 handheld, providing a full day of continuous usage under normal operating conditions.

The handheld can be charged using either the Office Docking Station or AC power supply that comes with the handheld. An optional DC power vehicle charger and spare battery are also available.

Performance: The Trimble Ranger 3 handheld was designed to meet MIL-STD-810G military standards for drops, vibration, humidity, altitude and extreme temperatures. With an IP67 rating, it is impervious to water, dust and the harsh conditions associated with meter reading.

ORION: An ORION equipped handheld can be used for reading and programming endpoints and as a troubleshooting tool in the field. To meet the needs of the utility, the Trimble Ranger 3 handheld can be ordered with an internal ORION ME FHSS mobile transceiver, an internal ORION CE FHSS receiver, or without an ORION radio as a manual handheld.

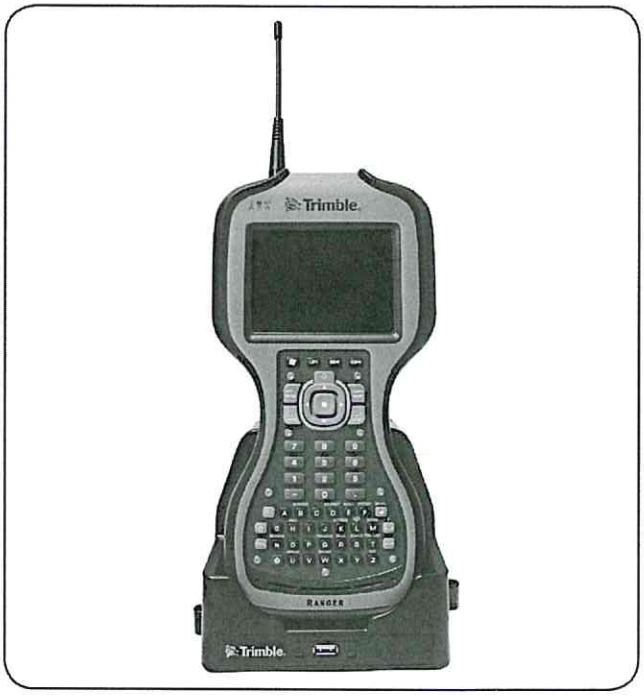

STANDARD FEATURES

- Microsoft® Windows Mobile 6.5 Professional
- Custom keypad: 53 tactile keys with separate navigation, alpha and numeric keypads, and 8+1 directional pad
- Touch screen
- Full-day battery life under normal operating conditions
- Complete recharge in 4.0 hours (80% in 2 hours)
- Three tri-color notification LEDs
- Rugged polycarbonate case with Hytrel® overmold
- Integrated components:
  - Bluetooth® 2.0 + EDR
  - WiFi 802.11b/g
  - Speaker and microphone with 3.5 mm stereo headset/microphone port
  - GPS receiver
  - Electronic compass
  - 1D barcode laser scanner*
  - 5 MP auto-focus camera with LED flash and LED flashlight function*

* ORION handhelds only

Product Data Sheet

STANDARD SOFTWARE

Badger Meter Suite of Field Application Software

Meter Reading Software – Admin and Kiosk Modes
Programming/Field Troubleshooting Software

Windows Mobile 6.5 Professional Operating System including the following:

Microsoft Office Mobile

- Word® Mobile
- Excel® Mobile
- PowerPoint® Mobile
- Outlook® Mobile

Internet Explorer Mobile

- Contacts
- Tasks/Notes
- Calendar
- Calculator
- Adobe Acrobat® Reader
- Windows Media Player
- Microsoft Pictures and Videos
- Microsoft ActiveSync
- Online Help
- Trimble SatViewer (GPS interface application)

STANDARD ACCESSORIES

- Office docking station with power cord
- Rechargeable lithium-ion battery pack
- International AC power supply charging kit with four plug adapters
- Audio port dust cover
- I/O port dust cover Screen protectors (15-pack)
- Hand strap
- Touch screen stylus (2) with tether
- USB cable (mini)
- USB flash drive
- IR programming cable
- ORION antenna (ORION handhelds only)

PHYSICAL (without antenna)

Size ..... 10.5" (26.6 cm) x 5.2" (13.1 cm) x 1.9" (4.8 cm)

Weight ..... 2.3 lb (1.04 kg), including battery and stylus

ELECTRICAL

Processor ..... Texas Instruments AM3715 Sitara® ARM® Cortex–A8 processor

Display ..... 4.2" landscape VGA 640 x 480 pixels sunlight readable TFT with LED backlight

Power ..... Lithium-Ion rechargeable pack 2500 mAh (11.1 V)

I/O ..... USB 2.0 full speed host and 2.0 high speed client; 15 V DC power port; 3.5 mm stereo and microphone audio port stereo; 9-pin RS-232 serial port

GPS Accuracy ..... 2-4 m with SBAS correction

ENVIRONMENT

Operating Temperature ..... 0 to 140° F (-18…60° C)

Storage Temperature ..... -40 to 158° F (-40…70° C)

Humidity ..... MIL-STD-810G, Method 507.5

Water ..... IP67, sealed against accidental immersion (1 m for 30 minutes) IEC-529

Drop ..... MIL-STD-810G, Method 516.6 Procedure IV 48" onto plywood over concrete 26 drops at room temperature (all faces, edges, corners, one drop each) 6 drops at 60° C, 6 drops at -30° C

Sand & Dust IP67, IEC-529

Vibration ..... MIL-STD-810G, Method 514.6 Procedures I and II

Altitude ..... MIL-STD-810G, Method 500.5 Procedures I, II, III, 15,000 ft at 73° F (23° C)

SPECIFICATIONS

Processor Speed ..... Intel XScale, 800 MHz

Memory ..... SDRAM ~256 MB Data storage (on-board flash) ~8 GB Secure digital (SD/SDHC) card slot

Wireless ..... Integrated Bluetooth 2.0 + EDR and WiFi 802.11b/g, standard

Certifications ..... FCC, IC (Canada), RoHS compliant WiFi Alliance certified MIL-STD-810G, IP67, MIL-STD 461

Making Water Visible®

ORION is a registered trademark of Badger Meter, Inc. Other trademarks appearing in this document are the property of their respective entities.
Due to continuous research, product improvements and enhancements, Badger Meter reserves the right to change product or system specifications without notice, except to the extent an outstanding contractual obligation exists. © 2014 Badger Meter, Inc. All rights reserved.

www.badgermeter.com

The Americas | Badger Meter | 4545 West Brown Deer Rd | PO Box 245036 | Milwaukee, WI 53224-9536 | 800-876-3837 | 414-355-0400
México | Badger Meter de las Americas, S.A. de C.V. | Pedro Luis Ogazón N°32 | Esq. Angelina N°24 | Colonia Guadalupe Inn | CP 01050 | Mexico, DF | México | +52-55-5662-0882
Europe, Middle East and Africa | Badger Meter Europa GmbH | Nurtinger Str 76 | 72639 Neuffen | Germany | +49-7025-9208-0
Europe, Middle East Branch Office | Badger Meter Europe | PO Box 341442 | Dubai Silicon Oasis, Head Quarter Building, Wing C, Office #C209 | Dubai / UAE | +971-4-371 2503
Czech Republic | Badger Meter Czech Republic s.r.o. | Maříkova 2082/26 | 621 00 Brno, Czech Republic | +420-5-41420411
Slovakia | Badger Meter Slovakia s.r.o. | Racianska 109/B | 831 02 Bratislava, Slovakia | +421-2-44 63 83 01
Asia Pacific | Badger Meter | 80 Marine Parade Rd | 21-04 Parkway Parade | Singapore 449269 | +65-63464836
China | Badger Meter | Rm 501, N° 11 Longyue Apartment | N° 180 Longjin Rd, Jiuting Songjiang District | Shanghai, China | 201615 | +86-21-5763 5412

Badger Meter | ORION® Water Products

PRODUCTS

This warranty shall apply to Badger Meter ORION® series AMR/AMI water endpoints, endpoint assemblies, reading hardware and software sold on or after June 3, 2014.

ORION series AMR/AMI water endpoints include Fixed Network (SE), Migratable (ME), Classic (CE) and Classic with Data Profiling (CE). Endpoint assemblies include ORION endpoints shipped with Badger Meter HR E-LCD, HR-E, ADE®, RTR® encoders and E-Series® meters.

This warranty is not transferable and is extended only to utilities, municipalities, other commercial users and authorized distributors, hereafter referred to as "Customer" and does NOT apply to consumers or any person or entity who is not an original Customer of Badger Meter or its authorized distributors.

MATERIAL AND WORKMANSHIP

Badger Meter warrants all ORION series AMR/AMI water endpoints, endpoint assemblies, reading hardware and software, hereafter referred to as "Product(s)" as listed below, to be free from defects in material and workmanship for the time period stated.

Endpoints[1]	20 years and 6 months after shipment
Endpoint Assemblies[1,2]	20 years and 6 months after shipment
CE Serial Repeater	5 years and 6 months after shipment
Permalog+ Acoustic Leak Logger	3 years and 6 months after shipment
SE, SE II Network Gateway Transceiver	1 year and 6 months after shipment
CE (4.0, 2.0) Network Gateway Receiver	1 year and 6 months after shipment
Mobile Reading System	1 year and 6 months after shipment
Trimble® Ranger Handheld and Charging Cradle	1 year and 6 months after shipment
ReadCenter® Reading Data Management Software	1 year and 6 months after shipment

[1] Badger Meter warrants endpoints, endpoint assemblies and endpoint batteries—collectively ORION endpoint Products—to be free from defects in material and workmanship for twenty (20) years and six (6) months after shipment from Badger Meter. Badger Meter will repair or replace, at its discretion, a non-performing ORION endpoint Product at no cost during the first ten (10) years, and at a prorated price during the last ten (10) years of the warranty. Badger Meter will apply these prorated price discounts to the ORION endpoint Product list prices at the time of ORION endpoint Product return and according to the following prorated price discount schedule: Years 11 through 12 - 75% discount; Years 13 through 15 - 50% discount; Year 16 - 40% discount; Year 17 - 30% discount; Year 18 - 20% discount; and Years 19 through 20 - 10% discount.

[2] ORION endpoint is warranted per the 20-year proration shown above. Refer to the appropriate E-Series Ultrasonic Meter Warranty for meter, electronics and battery coverage.

PRODUCT RETURNS

Product failures must be proven and verified to the satisfaction of Badger Meter. The Badger Meter obligation hereunder shall be limited to such repair and replacement and shall be conditioned upon Badger Meter receiving written notice of any asserted defect within 10 (ten) days after its discovery. This exclusive remedy shall not be deemed to have failed its essential purpose so long as Badger Meter is willing and able to replace the defective Product for the Customer within a reasonable time, after receipt of proof that a defect is involved. Product returns must be shipped by the Customer prepaid F.O.B. to the nearest Badger Meter factory or distribution center. The Customer shall be responsible for all direct and indirect costs associated with removing the Product and reinstalling the repaired or replacement Product.

LIMITS OF LIABILITY

This warranty shall not apply to any Product repaired or altered by any Party other than Badger Meter. The foregoing warranty applies only to the extent that the Product is installed, serviced and operated strictly in accordance with Badger Meter instructions. The warranty shall not apply and shall be void with respect to Products exposed to conditions other than those detailed in Product technical literature or which have been subject to vandalism, negligence, accident, acts of God, improper installation, operation or repair, alteration or other circumstances which are beyond the reasonable control of Badger Meter. With respect to products not manufactured by Badger Meter, the warranty obligations of Badger Meter shall in all respects conform and be limited to the warranty extended to Badger Meter by the supplier.

THE FOREGOING WARRANTIES ARE EXCLUSIVE AND IN LIEU OF ALL OTHER EXPRESS AND IMPLIED WARRANTIES WHATSOEVER, INCLUDING BUT NOT LIMITED TO IMPLIED WARRANTIES OF MERCHANTABILITY AND FITNESS FOR A PARTICULAR PURPOSE (except warranties of Title).

Any description of the Product, whether in writing or made orally by Badger Meter or its agents, specifications, samples, models, bulletins, drawings, diagrams, engineering sheets or similar materials used in connection with any Customer's order are for the sole purpose of identifying the Product and shall not be construed as an express warranty. Any suggestions by Badger Meter or its agents regarding use, application or suitability of the Product shall not be construed as an express warranty unless confirmed to be such, in writing, by Badger Meter.

Exclusion of Consequential Damages and Disclaimer of Other Liability

The liability of Badger Meter with respect to breaches of the foregoing warranty shall be limited as stated herein. Badger Meter's liability shall in no event exceed the contract price. BADGER METER SHALL NOT BE SUBJECT TO AND DISCLAIMS: (1) ANY OTHER OBLIGATIONS OR LIABILITIES ARISING OUT OF BREACH OF CONTRACT OR OF WARRANTY, (2) ANY OBLIGATIONS WHATSOEVER ARISING FROM TORT CLAIMS (INCLUDING NEGLIGENCE AND STRICT LIABILITY) OR ARISING UNDER OTHER THEORIES OF LAW WITH RESPECT TO PRODUCTS SOLD OR SERVICES RENDERED BY BADGER METER, OR ANY UNDERTAKINGS, ACTS OR OMISSIONS RELATING THERETO, AND (3) ALL CONSEQUENTIAL, INCIDENTAL AND CONTINGENT DAMAGES WHATSOEVER.

Badger Meter Warranty

Badger Meter

ReadCenter® Analytics Mobile

Reading Data Management Software

APPLICATION

ReadCenter®Analytics Mobile is a Windows®-based reading data management software platform developed by Badger Meter and designed specifically for ORION® ME and ORION CE water and gas Automatic Meter Reading (AMR) system deployments.

ReadCenter Analytics Mobile software manages and provides analysis of data collected from the following Badger Meter reading systems:

- ORION ME and CE mobile and handheld systems
- BadgerTouch® and competitive touch modules
- Manual reads from Read-o-Matic® and local read registers

OPERATION

Adding increased efficiency to every day utility operations, ReadCenter Analytics Mobile reading data management software is the heart of Advanced Metering Analytics (AMA). Utilities can effectively implement the appropriate AMR, touch or manual technology, based on the reading data needs of each end user, all with one software application.

READING DATA MANAGEMENT

ReadCenter Analytics Mobile reading data management software provides seamless management of the account reading process. Reading data collected is posted to each account and is then accessible for customer service and reporting purposes.

UTILITY BILLING INTERFACE

ReadCenter Analytics Mobile reading data management software has the flexibility to support multiple billing interface file formats, including the Badger Meter standard "C" file format. By supporting multiple file formats, utilities can implement a Badger Meter AMR solution without disrupting the current utility billing interface file transfer process.

CUSTOM CONFIGURATION

During installation, ReadCenter Analytics Mobile reading data management software is configured to meet the specific needs of each utility. To minimize operator training, only the necessary fields and modules to support the AMR systems are displayed. User and administrator passwords can be assigned to different users to ensure data management integrity.

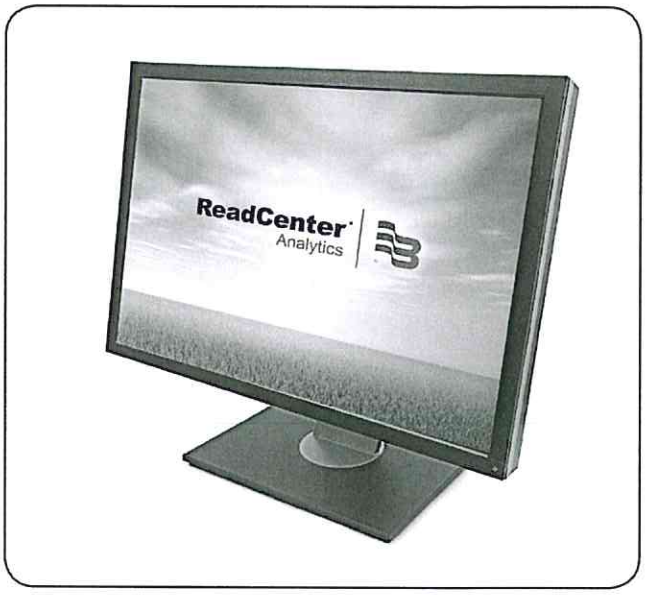

CUSTOM REPORTS

Designed with an integrated custom report builder, ReadCenter Analytics Mobile reading data management software gives utilities the ability to create their own reports from the data fields maintained in the ReadCenter SQL database. Custom reports can be viewed, printed or saved in a variety of formats for use in word processor, spreadsheet or database programs.

AUTOMATED PROCESSING

ReadCenter Analytics Mobile reading data management software can be configured to provide custom features to support the needs of any size water or gas utility. The automated processing option can be enabled to allow particular functions or procedures of the meter reading process to run without direct user intervention.

COMPUTER SYSTEM REQUIREMENTS

Application/Database Server Specification (Customer Supplied)

ReadCenter Analytics Mobile application software and database server are installed on a customer supplied computer which must meet the appropriate requirements listed below, based on the data source (either **A** or **B**).

A. With SQL Server 2008 R2 Express
(included on DVD, 10 GB maximum size)

Operating System	Windows XP – Professional, SP3 (x86 only) Windows 7 – Professional, Ultimate or Enterprise (x86 or x64)
Processor	1.3 GHz or higher, x86 or x64, quad core, i5 or i7 recommended
RAM	4 GB minimum available
Hard Disk	100 GB available
Drives	16X DVD-ROM for software installation
Monitor	Supports 1280 x 768 resolution or greater; 17...19-inch screen recommended
Printer	Inkjet or laser, networked or local
Network Connectivity	1 GB NIC recommended
Internet Connectivity	Required for WebEx® technical support connection
Ports	USB for handheld
Software	.NET Framework 4.0 or 4.5

B. With SQL Server 2008 R2 - Standard or Enterprise
(end user purchased and maintained)

Operating System	Windows Server 2008 R2 x64
Processor	2.46 GHz or higher, x86 or x64, quad core, i5 or i7 recommended
RAM	16 GB minimum available
Hard Disk	100 GB available
Drives	16X DVD-ROM for software installation
Monitor	Supports 1280 x 768 resolution or greater; 17...19-inch screen recommended
Printer	Inkjet or laser, networked or local
Network Connectivity	1 GB NIC recommended
Internet Connectivity	Required for WebEx® technical support connection
Ports	USB for handheld
Software	.NET Framework 4.0 or 4.5

Client Computer Specifications (Customer Supplied)

ReadCenter Analytics software supports up to 25 concurrent clients. Client PCs must meet the requirements listed below.

Operating System	Windows XP – Professional, SP3 (x86 only) Windows 7 – Professional, Ultimate or Enterprise (x86 or x64)
Processor	1.3 GHz or higher, x86 or x64, dual core, i5 or i7 recommended
RAM	4 GB minimum available
Hard Disk	20 GB available
Drives	16X DVD-ROM for software installation
Monitor	Supports 1280 x 768 resolution or greater; 17...19-inch screen recommended
Printer	Inkjet or laser, networked or local
Network Connectivity	1 GB NIC recommended
Internet Connectivity	Required for WebEx® technical support connection
Ports	USB for handheld
Software	.NET Framework 4.0 or 4.5

Multi-User Considerations

The software includes a five-seat, end-user license. Additional seat licenses are available in increments of five.

BadgerTouch, GALAXY, ORION, ReadCenter and Read-o-Matic are registered trademarks of Badger Meter, Inc. Other trademarks appearing in this document are the property of their respective entities. Due to continuous research, product improvements and enhancements, Badger Meter reserves the right to change product or system specifications without notice, except to the extent an outstanding contractual obligation exists. © 2013 Badger Meter, Inc. All rights reserved.

www.badgermeter.com

The Americas | Badger Meter | 4545 West Brown Deer Rd | PO Box 245036 | Milwaukee, WI 53224-9536 | 800-876-3837 | 414-355-0400
México | Badger Meter de las Americas, S.A. de C.V. | Pedro Luis Ogazón N°32 | Esq. Angelina N°24 | Colonia Guadalupe Inn | CP 01050 | México, DF | Mexico | +52-55-5662-0882
Europe, Middle East and Africa | Badger Meter Europa GmbH | Nurtinger Str 76 | 72639 Neuffen | Germany | +49-7025-9208-0
Czech Republic | Badger Meter Czech Republic s.r.o. | Mařikova 2082/26 | 621 00 Brno, Czech Republic | +420-5-41420411
Slovakia | Badger Meter Slovakia s.r.o. | Racianska 109/B | 831 02 Bratislava, Slovakia | +421-2-44 63 83 01
Asia Pacific | Badger Meter | 80 Marine Parade Rd | 21-04 Parkway Parade | Singapore 449269 | +65-63464836
China | Badger Meter | 7-1202 | 99 Hangzhong Road | Minhang District | Shanghai | China 201101 | +86-21-5763 5412

Legacy Document Number: RDC-T-04-EN

Badger Meter | ORION® Water Endpoints

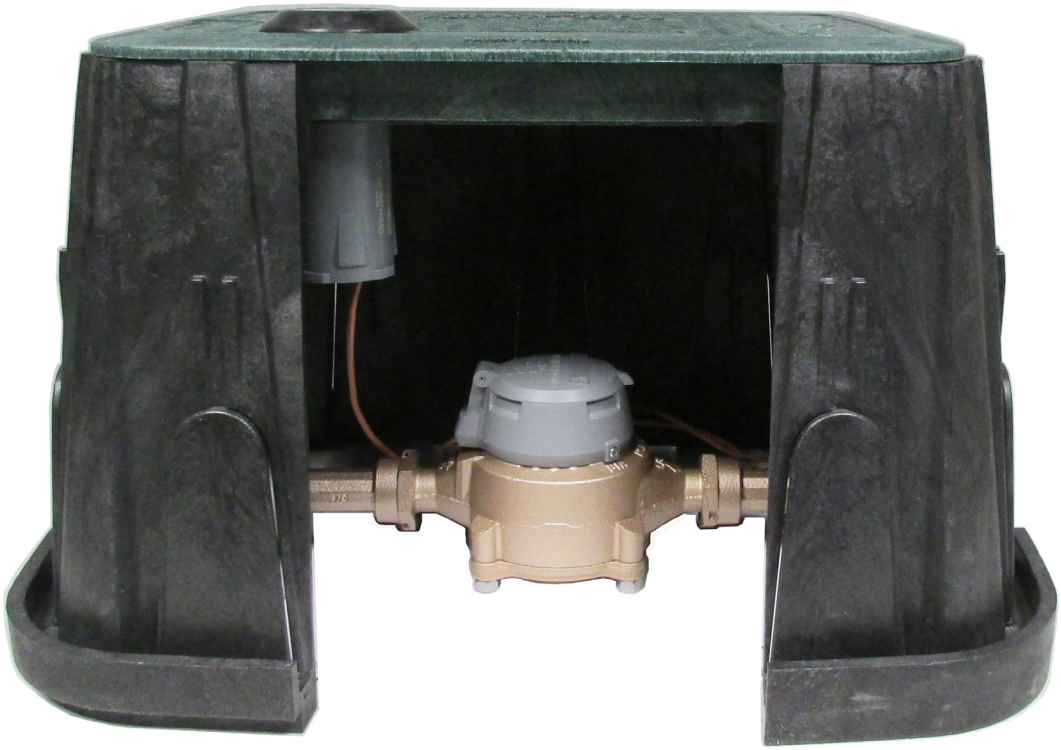

ORI-UM-00025-EN-06 (June 2014)

Installation Manual

CONTENTS

OVERVIEW 5
PRODUCT UNPACKING AND INSPECTION 5
LICENSE REQUIREMENTS 5
IDENTIFICATION 6
ENDPOINT INSTALLATION GUIDELINES 7
Endpoint/Encoder Connections 7
308/Nicor In-line Connectors. 8
ORION CELLULAR ENDPOINTS 9
Field Wiring, Encoder Connectivity and Read Resolution 9
Activating the Endpoint 9
Confirming an Installation 9
ORION FIXED NETWORK AND MIGRATABLE ENDPOINTS 10
Field Wiring, Encoder Connectivity and Read Resolution 10
Activating the Endpoint 11
Confirming an Installation 11
ORION CLASSIC ENDPOINTS 12
Field Wiring, Encoder Connectivity and Read Resolution 12
Activating the Endpoint 13
Confirming an Installation 13
USING GEL CAPS TO CONNECT AN ENCODER 14
Testing Wire Connections 15
ENDPOINT INSTALLATION KITS 16
PIT INSTALLATION 17
Through-the-Lid Installation Kit 17
Below-the-Lid with Knuckles Installation Kit 18
Integrated Pit Lid Hanger Installation Kit 19
VAULT INSTALLATION 19

REMOTE INSTALLATION 20
Remote Wall Mount Box Enclosure 20
IR Programming Bracket (Optional). 23
Remote Installation Bracket Kit 25
INTEGRAL ENDPOINT INSTALLATION 28
Mounting an Integral Endpoint on the Meter 28
Integral Endpoint with Three Feet of Wire. 28

OVERVIEW

This manual contains installation instructions for ORION® water endpoints.

- Installation of ORION endpoints must comply with all applicable federal, state and local rules, regulations and codes.
- Failure to read and follow these instructions can lead to misapplication or misuse of this product, resulting in personal injury and damage to equipment.
- Proper performance and reliability of ORION endpoints depend upon installation in accordance with these instructions.

PRODUCT UNPACKING AND INSPECTION

Upon receipt of the product, perform the following unpacking and inspection procedures.

NOTE: If damage to the shipping container is evident upon receipt, request the carrier to be present when the product is unpacked.

Carefully open the shipping package, follow any instructions that may be marked on the exterior. Remove all cushioning material surrounding the product and carefully lift the product from the package.

Retain the package and all packing material for possible use in reshipment or storage.

Visually inspect the product and applicable accessories for any physical damage such as scratches, loose or broken parts or any other sign of damage that may have occurred during shipment.

NOTE: If damage is found, request an inspection by the carrier's agent within 48 hours of delivery and file a claim with the carrier. A claim for equipment damage in transit is the sole responsibility of the purchaser.

Carefully remove the pre-wired ORION endpoint and encoder assembly or ORION endpoint from the shipping carton and inspect for damage. Retain the contents of the installation kit for use in mounting the endpoint in the field.

LICENSE REQUIREMENTS

ORION Fixed Network, Migratable and Classic endpoints comply with Part 15 of FCC Rules. ORION Cellular endpoints comply with Part 15, Part 22 and Part 24 of FCC Rules. Operation is subject to the following conditions: (1) This device may not cause harmful interference, and (2) this device must accept any interference received, including interference that may cause undesired operation of the device.

In accordance with FCC Regulations, "Code of Federal Regulations" Title 47, Part 2, Subpart J, Section 1091, transmitters pass the requirements pertaining to radiation exposure. However, to avoid public exposure in excess of limits for general population (uncontrolled exposure), a 20 centimeter distance between the transmitter and the body of the user must be maintained during testing.

No FCC license is required by a utility to operate an ORION meter reading system.

This device complies with Industry Canada license-exempt RSS standard(s). Operation is subject to the following two conditions: (1) this device may not cause interference, and (2) this device must accept any interference, including interference that may cause undesired operation of the device. Le présent appareil est conforme aux CNR d'Industrie Canada applicables aux appareils radio exempts de licence. L'exploitation est autorisée aux deux conditions suivantes : (1) l'appareil ne doit pas produire de brouillage, et (2) l'utilisateur de l'appareil doit accepter tout brouillage radioélectrique subi, même si le brouillage est susceptible d'en compromettre le fonctionnement.

IMPORTANT

Transportation: The Federal Aviation Administration prohibits operating endpoints and receivers on all commercial aircraft. The ORION endpoint is considered an operating transmitter and cannot be shipped by air.

IDENTIFICATION

The ORION endpoint is a three-wire metering endpoint device that requires connection to an encoder to complete the assembly. Each ORION endpoint has a unique numeric serial number on the tag attached to the wire harness and etched on the top or side of the endpoint housing. Each Badger Meter encoder is identified on the face of the register with an assembly number, unit of measure and meter model.

Cellular Endpoint
(medium gray with yellow label)

Fixed Network (SE) or
Migratable (ME) Endpoint
(medium gray)

Classic (CE) ADE® Endpoint
(light gray)

Classic (CE) RTR® Endpoint
(black)

High Resolution LCD Encoder (HR-E LCD)

E-Series® Ultrasonic Meter with
High Resolution LCD Encoder

High Resolution 8-Dial Encoder (HR-E)

Absolute Digital Encoder (ADE®)

Recordall® Transmitter Register (RTR®)

Figure 1: Endpoints and encoders

ENDPOINT INSTALLATION GUIDELINES

ORION endpoints can be installed indoors or outdoors, observing these guidelines:

- When a meter is being installed indoors, the wired radio endpoint should be mounted outside the building or in the floor joist near an outside wall and away from large metal objects for maximum propagation of the radio signal.
- **Cellular and Fixed Network endpoints**: For pit installations, mounting through a non-metal pit lid is **required** for maximum propagation of the radio signal.
- **Migratable and Classic endpoints**: For pit installations, mounting through a non-metal pit lid is **recommended** for maximum propagation of the radio signal.

Endpoint/Encoder Connections

ORION endpoints are three-wire metering endpoint devices that require connection to an encoder to complete the assembly. Available configurations and the encoder connection methods are listed here, based on the endpoint type.

ORION Cellular Endpoint Configurations

ORION Cellular endpoints are available in the following configurations that can be deployed in indoor, outdoor and pit applications.

Endpoint Configurations	Encoder Connection
• Prewired endpoint/encoder assembly with or without connector	Factory prewired ORION endpoints are shipped connected to a Badger Meter encoder, ready for installation and require no splicing. See *"Endpoint Installation Kits" on page 16*.
• Endpoint only with Badger Meter in-line connector (308 or Nicor®)	Connect the endpoint to an encoder using the 308 or Nicor connectors. See *"308/Nicor In-line Connectors" on page 8* *and* *"Endpoint Installation Kits" on page 16*.
• Endpoint only with flying lead for field splice	See *"ORION Cellular Endpoints" on page 9* for field wiring information.

ORION Fixed Network, Migratable and Classic Endpoint Configurations

ORION Fixed Network, Migratable and Classic endpoints are available in the following configurations that can be deployed in indoor, outdoor and pit applications.

Endpoint Configurations	Encoder Connection
• Prewired endpoint/encoder assembly with or without connector	Factory prewired ORION endpoints are shipped connected to a Badger Meter encoder, ready for installation and require no splicing. See *"Endpoint Installation Kits" on page 16*.
• Prewired integral endpoint/encoder assembly	Mount the assembly on the bayonet of the meter. See *"Integral Endpoint Installation" on page 28* for details.
• Endpoint only with Badger Meter in-line connector (308 or Nicor®)	Connect the endpoint to an encoder using the 308 or Nicor connectors. See *"308/Nicor In-line Connectors" on page 8* *and* *"Endpoint Installation Kits" on page 16*.
• Endpoint only with flying lead for field splice	See *"ORION Fixed Network and Migratable Endpoints" on page 10* and *"ORION Classic Endpoints" on page 12* for field wiring information.

308/Nicor In-line Connectors

An in-line connector is an optional feature that allows connectivity to AMR/AMI devices without the need for a field splice kit. When the endpoint and encoder have Badger Meter connectors, connect the male and female connector ends. The connectors go together easily with the proper orientation.

- With 308 connectors, align the notch on the female end with the corresponding projection on the male end (See *308 Connector, Figure 2*) and push the ends together for the correct fit.
- With Nicor connectors, align the arrows on the connectors (See *Nicor Connector, Figure 2*) and push the male and female ends together.

You will hear a "click" when the ends are firmly seated and the connection is secure.

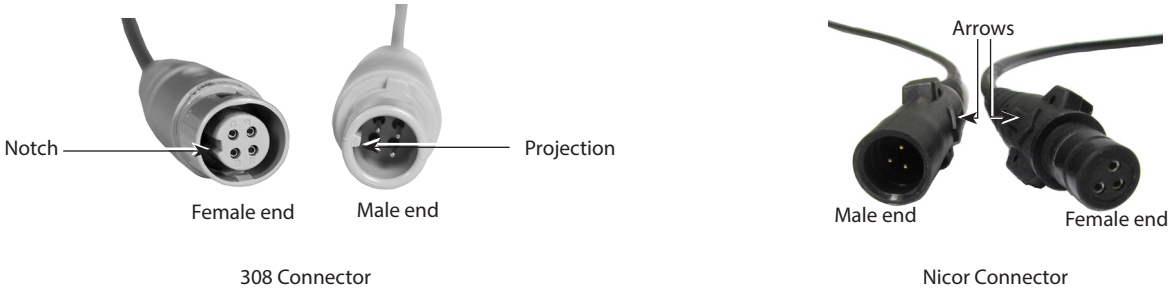

308 Connector

Nicor Connector

Figure 2: In-line connectors

ORION CELLULAR ENDPOINTS

This section contains information regarding identification and encoder compatibility for field wiring and activation of ORION Cellular endpoints. ORION Cellular endpoints have a 9-digit serial number range of 100000000 to 199999999.

Field Wiring, Encoder Connectivity and Read Resolution

ORION Cellular endpoints with flying leads are available for connectivity to Badger Meter high resolution encoders and E-Series Ultrasonic meters as well as a number of competitive encoders as shown in chart below.

Endpoints are shipped from the factory pre-programmed and are available in an indoor/outdoor, three-wire configuration for connection to the encoders listed. *See also "Endpoint Installation Kits" on page 16.*

All three wires must be connected to complete an installation. The ORION endpoint connection can be made to either existing wires from the encoder or directly to the terminal screws of the encoder, depending on the application and manufacturer. Follow the manufacturer's installation kit instructions provided with the gel splice or field splice kit you are using.

NOTE: For instructions on using gel connectors for field wiring, see *"Using Gel Caps to Connect an Encoder" on page 14*.

ORION endpoint wires: Red = Power/Clock; Black = Ground; Green = Data

Endpoint Label	Encoder Connectivity	Encoder Wire/Termination Colors	Endpoint Wire Colors Red	Black	Green	Reading Resolution
ORION Cellular CDMA	Badger Meter HR-E LCD or HR-E encoders, or E-Series Ultrasonic Meter with High Resolution Output		Red	Black	Green	Up to nine (9) most significant digits
	Elster/AMCo ScanCoder or Invision*		Green	Black	Red	Up to nine (9) most significant digits
	Master Meter® Octave® Ultrasonic meter encoder output		Red	Black	Green	Up to eight (8) most significant digits
	Metron Hawkeye*		Red	Black	Green	Up to nine (9) most significant digits
	Neptune ProRead, E-coder or ARB-V*		Black	Green	Red	Up to nine (9) most significant digits
	Sensus ECR II or ICE*		Red	Black	Green	Up to nine (9) most significant digits
	Hersey Translator		Due to the customized, factory wire configurations of the Hersey Translator, the terminal posts may not match the ORION endpoint wire colors. Please contact Hersey for the terminal post wiring schematic of your encoders to determine how the posts correspond to ORION endpoint wires.			

NOTE: Competitive encoder output is determined by the encoder configuration.

*ORION Cellular endpoints are compatible with the encoders noted above with a manufacture date of 2000 or newer as long as the encoder has three wires connected to it and is programmed into the three-wire output mode for AMR/AMI. Encoder registers that are currently in two-wire mode of operation require programming by the Utility, including registers that support auto two- or three-wire detection systems that do not automatically switch to three-wire mode of operation once a compatible endpoint is connected for ORION connectivity.

Activating the Endpoint

ORION Cellular endpoints are shipped in an inactive, non-transmitting state. The endpoint must be activated by magnet swipe and use of the ORION Cellular endpoint installation smartphone application, BEACONTool.

Confirming an Installation

Before leaving the installation site, the installer can use an ORION handheld to confirm via IR that the endpoint wiring has been done correctly and is broadcasting RF data for cellular data collection. Refer to the appropriate handheld user manual for more information.

ORION FIXED NETWORK AND MIGRATABLE ENDPOINTS

This section contains information regarding identification and encoder compatibility for field wiring and activation of ORION Fixed Network and Migratable endpoints. ORION Fixed Network and Migratable endpoints have a serial number range of 30000000 to 599999999.

Field Wiring, Encoder Connectivity and Read Resolution

ORION Fixed Network and Migratable endpoints with flying leads are available for connectivity to Badger Meter encoders and E-Series Ultrasonic meters as well as a number of competitive encoders as shown in chart below.

Endpoints are shipped from the factory pre-programmed and are available in an indoor/outdoor, three-wire configuration for connection to the encoders listed. *See also "Endpoint Installation Kits" on page 16*.

All three wires must be connected to complete an installation. The ORION endpoint connection can be made to either existing wires from the encoder or directly to the terminal screws of the encoder, depending on the application and manufacturer. Follow the manufacturer's installation kit instructions provided with the gel splice or field splice kit you are using.

NOTE: For instructions on using gel connectors for field wiring, see *"Using Gel Caps to Connect an Encoder" on page 14*.

ORION endpoint wires: Red = Power/Clock; Black = Ground; Green = Data

Endpoint Label	Encoder Connectivity	Encoder Wire/Termination Colors	Endpoint Wire Colors			Reading Resolution
			Red	Black	Green	
ELCD or ENC	Badger Meter HR-E LCD or HR-E encoders, or E-Series Ultrasonic Meter with High Res output		Red	Black	Green	Up to eight (8) most significant digits
ADE or ENC	Badger Meter ADE or E-Series Ultrasonic Meter with ADE output		Red	Black	Green	Up to six (6) most significant digits
RTR	Badger Meter RTR or E-Series Ultrasonic Meter with RTR output		Red	Black	Green	Up to seven (7) most significant digits
ADE or ENC	Elster/AMCo ScanCoder or Invision*		Green	Black	Red	Up to eight (8) most significant digits
C700D	Elster/AMCo C700 Digital*		Red	Black	Not used – cut green wire flush with outer sheath	Up to seven (7) most significant digits
ADE or ENC	Master Meter Octave Ultrasonic meter encoder output		Red	Black	Green	Up to eight (8) most significant digits
ADE or ENC	Metron Hawkeye*		Red	Black	Green	Up to eight (8) most significant digits
ADE or ENC	Neptune ProRead, E-coder or ARB-V*		Black	Green	Red	Up to eight (8) most significant digits
ADE or ENC	Sensus ECR II or ICE*		Red	Black	Green	Up to eight (8) most significant digits
ADE or ENC	Hersey Translator		Due to the customized, factory wire configurations of the Hersey Translator, the terminal posts may not match the ORION endpoint wire colors. Please contact Hersey for the terminal post wiring schematic of your encoders to determine how the posts correspond to ORION endpoint wires.			

NOTE: Competitive encoder output is determined by the encoder configuration.

*ORION Fixed Network and Migratable ADE or ENC endpoints are compatible with the encoders noted above with a manufacture date of 2000 or newer as long as the encoder is programmed into the three-wire output mode for AMR/AMI and has three wires connected to it. Encoder registers that are currently in two-wire mode of operation require programming by the Utility, including registers that support auto two- or three-wire detection systems that do not automatically switch to three-wire mode of operation once a compatible endpoint is connected for ORION connectivity.

Activating the Endpoint

ORION Fixed Network and Migratable endpoints are shipped in an inactive, non-transmitting state known as "Pause" mode. The endpoint offers a Smart Activation feature. After the endpoint is installed, it begins broadcasting data when the encoder to which the endpoint is connected senses the first usage of water. No field programming or special tools are required to activate the endpoint.

NOTE: Endpoints shipped via air are shipped in "Stop" (hard sleep) mode and must be activated via infrared (IR) communication using an ORION handheld or mobile reading system and the ORION Endpoint Utility software.

RTR

When an RTR is mounted on the water meter, and the ORION endpoint connected to the RTR is securely installed, the ORION system is ready for operation. The endpoint will turn on with water usage. Run water through the meter to increment the RTR 1/10th of the test circle. Upon receiving the first digital signal from the RTR, the endpoint counts the signal and begins its radio frequency (RF) transmissions. No specific wire testing or endpoint programming is required.

NOTE: Reading an ORION endpoint with the ORION handheld or mobile meter reading equipment immediately after installation verifies proper operation and reading performance.

HR-E or ADE

When an HR-E or ADE is mounted on the water meter, and the ORION endpoint connected to the encoder is securely installed, the ORION system is ready for operation. The endpoint will turn on with water usage. It requires up to one fifteen minute reading interval where consumption registers the electronic reading. For example, with an ORION endpoint connected to an eight-dial HR-E or six-dial ADE, the encoder must detect consumption of 10 gallons before the endpoint begins its RF data broadcast. Once it begins broadcasting, the endpoint updates hourly based on the encoder odometer reading. No specific wire testing or endpoint programming is required.

NOTE: Reading an ORION endpoint with the ORION handheld or mobile meter reading equipment immediately after installation verifies proper operation and reading performance.

High Resolution ELCD Encoder or E-Series Ultrasonic Meter

When an HR-ELCD encoder is mounted on the water meter, or when an E-Series Ultrasonic meter is installed, and the ORION endpoint connected to the encoder or E-Series Ultrasonic meter is securely installed, the ORION system is ready for operation. The endpoint will turn on with water usage. When using consumption, the endpoint requires one fifteen minute interval where the least significant digit on the encoder changes before the endpoint begins its RF data broadcast. Once the endpoint has begun broadcasting, it will update hourly based on the HR-E LCD encoder or High Resolution E-Series Ultrasonic meter odometer reading. No specific wire testing or endpoint programming is required.

NOTE: Reading an ORION endpoint with the ORION handheld or mobile meter reading equipment immediately after installation verifies proper operation and reading performance.

Confirming an Installation

Before leaving the installation site, the installer can use an ORION handheld or mobile reading system to confirm the endpoint wiring has been done correctly and that the endpoint is broadcasting RF data for reading. See the appropriate handheld or mobile reading system user manuals for more information.

ORION CLASSIC ENDPOINTS

This section contains information regarding identification and encoder compatibility for field wiring and activation of ORION Classic endpoints. ORION Classic endpoints have a serial number range of 70000000 to 199999999.

Field Wiring, Encoder Connectivity and Read Resolution

ORION Classic endpoints with flying leads are available for connectivity to Badger Meter encoders and E-Series Ultrasonic meters as well as a number of competitive encoders as shown in chart below.

Endpoints are shipped from the factory pre-programmed and are available in an indoor/outdoor, three-wire configuration for connection to the encoders listed. *See also "Endpoint Installation Kits" on page 16*.

All three wires must be connected to complete an installation. The ORION endpoint connection can be made to either existing wires from the encoder or directly to the terminal screws of the encoder, depending on the application and manufacturer. Follow the manufacturer's installation kit instructions provided with the gel splice or field splice kit you are using.

NOTE: For instructions on using gel connectors for field wiring, see *"Using Gel Caps to Connect an Encoder" on page 14*.

ORION endpoint wires: Red = Power/Clock; Black = Ground; Green = Data

Endpoint Label	Encoder Connectivity	Encoder Wire/Termination Colors	Endpoint Wire Colors Red	Black	Green	Reading Resolution
ADE	Badger Meter ADE, HR-E LCD or HR-E encoders, or E-Series Ultrasonic Meter with High Res or ADE output		Red	Black	Green	Up to seven (7) most significant digits
RTR	Badger Meter RTR or E-Series Ultrasonic Meter with RTR output		Red	Black	Green	Up to seven (7) most significant digits
UNIV*	Elster/AMCo ScanCoder or Invision		Green	Black	Red	Up to seven (7) most significant digits
UNIV*	Master Meter Octave Ultrasonic meter encoder output		Red	Black	Green	Up to seven (7) most significant digits
UNIV*	Metron Hawkeye		Red	Black	Green	Up to seven (7) most significant digits
ARB-V*/**	Neptune ARB-V for connectivity to ORION endpoint > serial number 80000000		Black	Green	Red	Up to seven (7) most significant digits
ARB-V*/**	Neptune ARB-V for connectivity to ORION endpoint < serial number 79999999		Red	Black	Green	Up to seven (7) most significant digits
UNIV*	Neptune ProRead or E-coder		Black	Green	Red	Up to seven (7) most significant digits
UNIV*	Sensus ECR II or ICE		Red	Black	Green	Up to seven (7) most significant digits
UNIV*	Hersey Translator		Due to the customized, factory wire configurations of the Hersey Translator, the terminal posts may not match the ORION endpoint wire colors. Please contact Hersey for the terminal post wiring schematic of your encoders to determine how the posts correspond to ORION endpoint wires.			

NOTE: Competitive encoder output is determined by the encoder configuration.

*ORION Classic UNIV and ARB-V endpoints are compatible with the encoders noted above with a manufacture date of 2000 or newer as long as the encoder is programmed into the three-wire output mode for AMR/AMI and has three wires connected to it. Encoder registers that are currently in two-wire mode of operation require programming by the Utility, including registers that support auto two- or three-wire detection systems that do not automatically switch to three-wire mode of operation once a compatible endpoint is connected for ORION connectivity.

**A separate ORION CE Universal endpoint is available for connectivity to the Neptune ARB-V encoder. Make sure the ORION Classic endpoint has "ARB-V" on the harness label when wiring to an ARB-V encoder. Wiring differs depending on the serial number of the ORION endpoint you are connecting to the ARB-V encoder, so make sure to verify wiring is correct per the above chart.

Activating the Endpoint

ORION Classic water endpoints are shipped in an inactive, non-transmitting state known as "Pause" mode. The endpoint offers a Smart Activation feature. After the endpoint is installed, it begins broadcasting data when the encoder senses the first usage of water. No field programming or special tools are required to activate the endpoint.

NOTE: Endpoints shipped via air are shipped in "Stop" (hard sleep) mode and must be activated via IR communication using an ORION handheld or mobile reading system and the ORION Endpoint Utility software.

RTR

When an RTR is mounted on the water meter, and the ORION endpoint connected to the RTR is securely installed, the ORION system is ready for operation. The endpoint will turn on with water usage. Run water through the meter to increment the RTR 1/10th of the test circle. Upon receiving the first digital signal from the RTR, the endpoint counts the signal and begins its radio frequency (RF) transmissions. No specific wire testing or endpoint programming is required.

NOTE: Reading an ORION endpoint with the ORION handheld or mobile meter reading equipment immediately after installation verifies proper operation and reading performance.

ADE, UNIV or ARB-V Endpoint

After the ORION endpoint is securely installed and the encoder is mounted on the water meter, the ORION system is ready for operation. The endpoint will turn on with water usage. An ADE/UNIV/ARB-V endpoint requires up to one hourly reading interval where consumption changes the electronic reading. For example, with an ORION endpoint connected to a six-dial ADE, the encoder must detect consumption of 10 gallons before the endpoint will begin its RF data broadcast. Once it begins broadcasting, the endpoint will update hourly based on the encoder odometer reading. No specific wire testing or endpoint programming is required.

NOTE: Reading an ORION endpoint with the ORION handheld or mobile meter reading equipment immediately after installation verifies proper operation and reading performance.

Confirming an Installation

Before leaving the installation site, the installer can use an ORION handheld or mobile reading system to confirm the endpoint wiring has been done correctly and that the endpoint is broadcasting RF data for reading. See the appropriate handheld or mobile reading system user manuals for more information.

USING GEL CAPS TO CONNECT AN ENCODER

For those connections that are not factory wired or equipped with in-line connectors, follow these guidelines for using gel caps when splicing is required, either for installation or to fix a repair after a tamper.

Refer to the wiring charts starting on *page 9*.

NOTE:

- For pit environments, splice connections require a field splice kit (62084-001), which can be ordered separately. Refer to the instructions found in the document, *Field Splice Kit for Badger Meter AMR/AMI Products,* which is available at *www.badgermeter.com*.
- For all installations, excess wire should be coiled and cable tied to avoid any damage.
- Required splicing tools are shown here.

Splice Tools (Customer Supplied)	**Badger Meter Part Number**	
• Parallel Pliers	59983-001	
• Coax Wire Stripper	59989-001	
• Diagonal Cutting Pliers	n/a	

Using Gel Caps to Connect an Encoder

Follow these steps when using Badger Meter supplied gel caps.

1. To connect an encoder with existing wires to an ORION endpoint, strip approximately 1-1/2 inches of outer insulation sheath from the encoder and endpoint cables using a coax wire stripping tool. We recommend using the Badger Meter Coax Wire Stripper (59989-001).

   ⚠CAUTION

   USE CAUTION WHEN REMOVING THE OUTER SHEATH SO THAT THE INNER SIGNAL WIRE INSULATION IS NOT NICKED OR DAMAGED.

2. Unwind the outer foil shield from the endpoint cable and cut it off even with the outer sheath using diagonal cutting pliers.
3. Connect the ORION endpoint to an approved encoder. Verify the endpoint serial number prior to completing the wiring setup.
   - Connect the encoder cable wires to the ORION endpoint wires using the insulation gel caps provided in the installation kit. Refer to the charts starting on *page 9* for the endpoint type and determine which wires need to be connected to complete an installation.

     NOTE: The terminal posts and wire colors may not match.

     ⚠CAUTION

     DO NOT STRIP ANY INSULATION FROM THE ENDS OF THE WIRES BEFORE YOU PUSH THEM INTO THE GEL CAP.

   - Insert the wires from each cable end as far as possible into the gel cap. See *Figure 3: Wires in gel cap*.

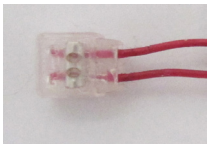

Figure 3: Wires in gel cap

- Using a crimping tool such as the Badger Meter Parallel Pliers (59983-001), place the gel cap with the wires into the jaws of the crimping tool.

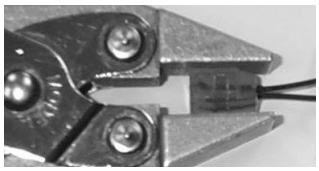

Figure 4: Gel cap in crimping tool

- Crimp the gel cap by squeezing the crimping tool handles until the gel cap is completely compressed. The Badger Meter Parallel Pliers is designed to apply just enough pressure to crimp the gel cap. Apply pressure for three seconds.

Figure 5: Compress the gel cap

- Repeat the crimping procedure for the remaining gel caps and wires.

4. Attach the two plastic cable ties and tighten securely for strain relief. Snip off the excess cable tie with the wire cutter.
5. For remote installations, the connection is complete.

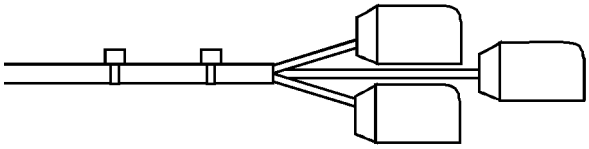

Figure 6: Wire tie attachment locations

NOTE: For pit installations, an appropriate field splice kit should be used. If using the Badger Meter Field Splice Kit, refer to the *Field Splice Kit Application Data Sheet* provided with the kit.

Testing Wire Connections

It is recommended that you test all wiring connections to confirm connectivity and to verify the ORION endpoint reading and the encoder reading are the same. The connections can be tested using the Quick Read function with either an ORION handheld or mobile data collector. See the appropriate software manual, available at *www.badgermeter.com*, for more information.

ENDPOINT INSTALLATION KITS

The following kits are available for pit, vault and remote endpoint installations. Instructions for using the kits are included in this section.

TYPE	DESCRIPTION	KIT PART NUMBER
PIT	*Through-the-Lid Installation Kit*	64394-001
	Below-the-Lid with Knuckles Installation Kit	64394-003
	Integrated Pit Lid Hanger Installation Kit	64394-009
VAULT	*Vault Installation*	64394-008
REMOTE	*Remote Wall Mount Box Enclosure*	66009-004
	IR Programming Bracket (Optional)	67625-001
	Remote Installation Bracket Kit	64394-029

NOTE: Refer to the ORION Water Endpoint Parts List, available at *www.badgermeter.com* for individual endpoint kit components.

A **Commercial Meter Bracket Mounting Kit (64394-023)** is also available for mounting a remote endpoint to a meter. The kit includes its own Installation Data sheet.

PIT INSTALLATION

Through-the-Lid Installation Kit

The **Through the Lid Installation Kit (64394-001)** is designed for use with a pit lid of one inch maximum thickness and a standard hole diameter of 1-7/8 inches.

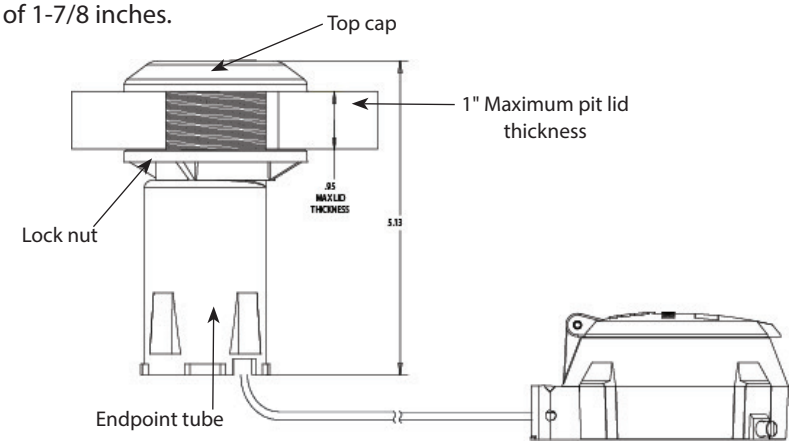

Figure 7: ORION pit endpoint

To install the endpoint through the lid, follow these steps and refer to *Figure 7*.

1. Screw the lock nut onto the tube threads as shown.
2. Insert the endpoint tube through the bottom of the lid.
3. Screw the top cap onto the endpoint tube threads as shown and tighten.
4. Tighten the lock nut against the bottom of the lid until secure.

NOTE: If installing an ORION endpoint through a thick lid, you may use a **Pit Tube Extender (67025-001)** which requires a two-inch diameter hole. Radio frequency (RF) performance may be reduced when using the Extender.

Below-the-Lid with Knuckles Installation Kit

For below the lid installations, a special **Below-the-Lid with Knuckles Installation Kit (64394-003)** with mounting bracket (*Figure 8*) is available. This mounting support bracket is designed for use with a 3/8, 5/8 and 1/2 inch rebar or 1/2 inch schedule 40 PVC pipe.

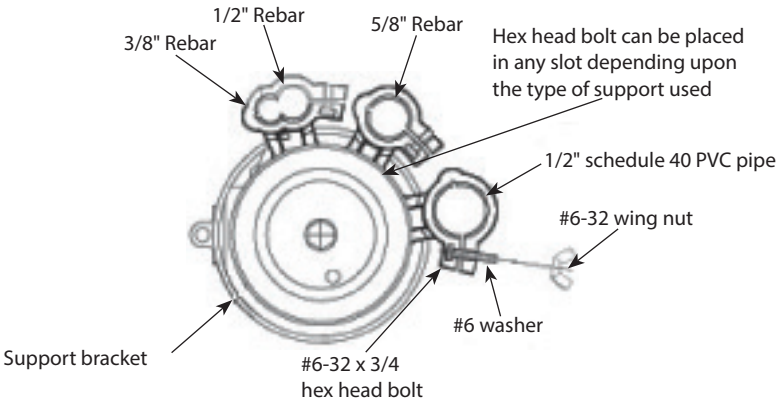

Figure 8: Pit support bracket (knuckles) - top view

To install an ORION endpoint below a meter pit lid, follow these steps and refer to *Figure 9*.

1. Drive rebar or stake into the ground.

   ⚠CAUTION

   DRIVE REBAR OR STAKE INTO THE GROUND PRIOR TO ATTACHING THE ENDPOINT TO AVOID DAMAGE.

2. Once in the ground, secure the mounting bracket on the appropriate rebar or pipe using the enclosed washer, wing nut and hex head bolt provided with the bracket.
3. Insert the endpoint through the bottom of the bracket and thread the lock nut onto the top of the endpoint. For best results, mount the endpoint a maximum of one to two inches below the underside of the lid.

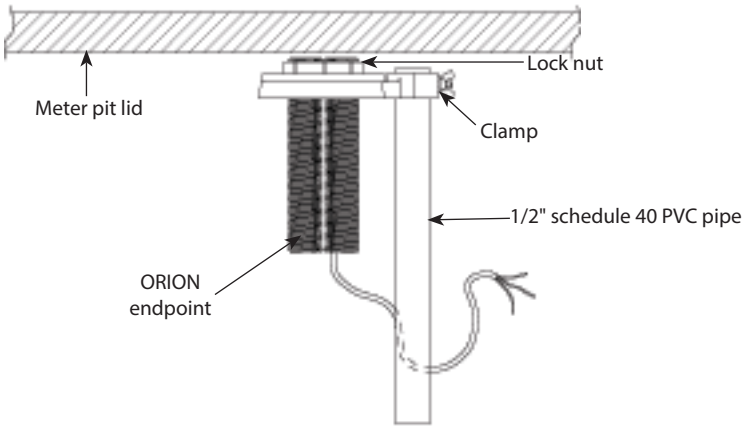

Figure 9: Pit ORION beneath lid installation

Integrated Pit Lid Hanger Installation Kit

ORION endpoints can be installed below composite and plastic lids that have an integrated hanger for AMR/AMI endpoints using the **Integrated Pit Lid Hanger Installation Kit (64394-009)**.

To install an ORION endpoint to a composite or plastic lid with an integrated hanger, follow these steps and refer to *Figure 10*.

1. Thread the lock nut onto the top of the ORION endpoint as shown.
2. Slide the endpoint into the lid bracket.
3. Tighten the lock nut so that the endpoint is held firmly in place.

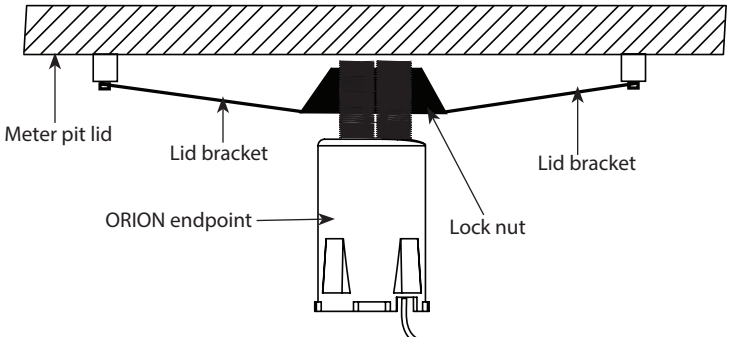

Figure 10: Integrated pit lid hanger installation

VAULT INSTALLATION

For a deep vault installation, Badger Meter offers a **Vault Installation Kit (64394-008)** that can be used to mount the endpoint to the side of the vault.

To install an ORION endpoint in a deep vault, follow these steps and refer to *Figure 11*.

1. Mount the C-clamp on the side of the vault. Select a location inside the vault, close to the top, that will not be damaged when access to the meter is required.
2. Place the neoprene spacer supplied in the installation kit around the endpoint, approximately 1/2 inch from the top of the endpoint.
3. Thread the lock nut on the endpoint until it makes contact with the neoprene spacer as shown in *Figure 11*.
4. Insert the endpoint into the C-clamp as shown.
5. Close the C-clamp and lock it in place so that it closes over the neoprene spacer and securely holds the endpoint.

NOTE: ORION radio endpoints perform best with a clear line of sight. Performance varies by installation and lid construction.

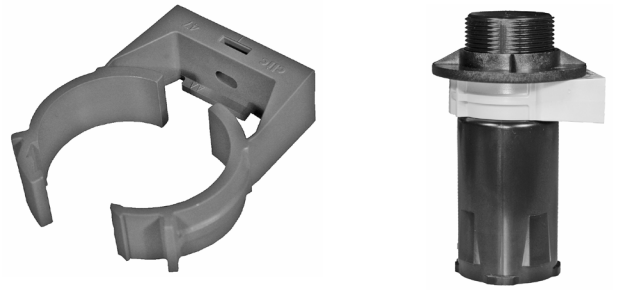

C-Clamp C-Clamp around endpoint

Figure 11: C-Clamp and placement

REMOTE INSTALLATION

Remote Wall Mount Box Enclosure

The ORION **Remote Wall Mount Box Enclosure Kit (66009-004)** can be used for remote mounting applications. The wall mounted remote box enclosure is designed for mounting ORION endpoints in indoor or outdoor environments, and also provides an environmentally protected area for gel splice connections (if needed) to be maintained inside the enclosure.

The ORION Remote Wall Mount Box Enclosure Kit is recommended for proper mounting of the ORION endpoint for remote applications.

Remote Box Enclosure

ORION CE RTR Endpoint

Figure 12: Enclosure and endpoint

To install an ORION endpoint using the remote box enclosure, follow these steps.

1. Flip over the remote box enclosure and look inside to verify the proper orientation. The bottom is identified by the hole in the bottom of the enclosure that allows access to the endpoint IR communication port without having to disassemble the unit and the IR head holder rails (*"Figure 13: Remote box enclosure mounting" on page 21*).

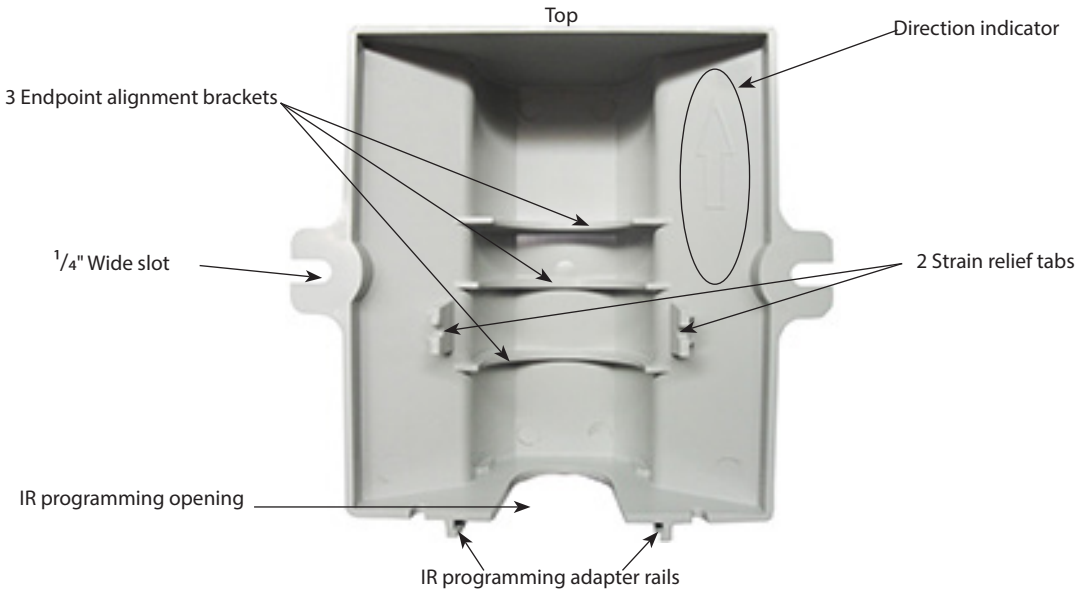

Figure 13: Remote box enclosure mounting

2. Place the endpoint into the ORION remote box enclosure as shown in *Figure 14*. Make certain the flat side of the endpoint is facing the back of the enclosure (toward the installer) when inserting the ORION endpoint into the remote box enclosure. When installing, mount the endpoint antenna toward the top of the enclosure, between the endpoint alignment brackets.

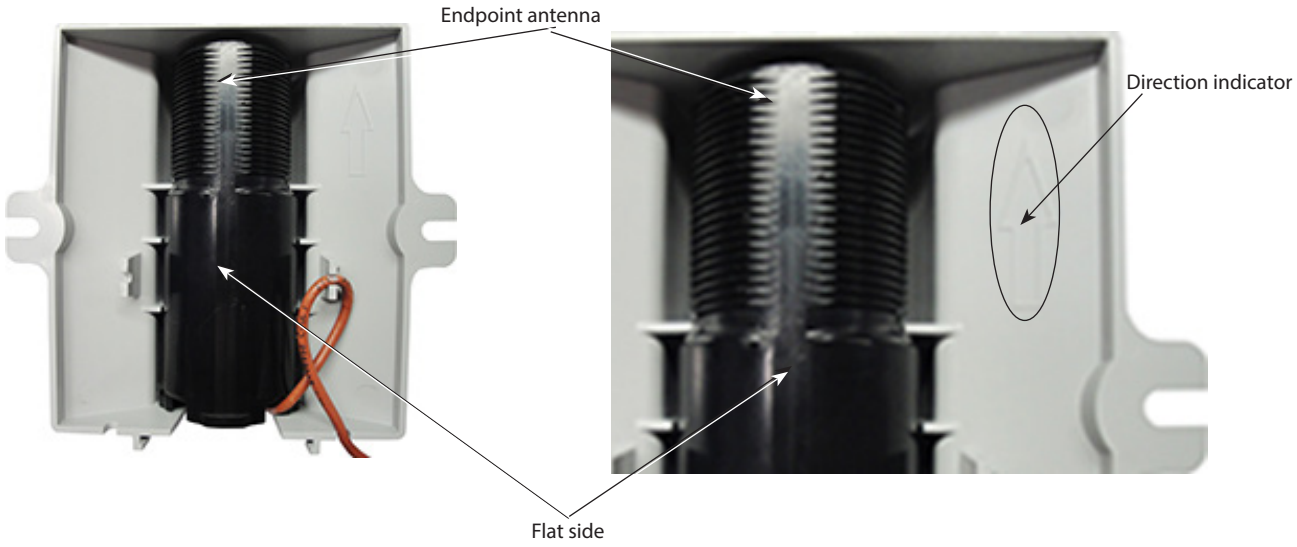

Figure 14: Endpoint orientation

NOTE: The arrow on the back of the remote box enclosure points up, toward the top of the assembly.

3. When mounting the remote box enclosure on a wall, mount it with the arrow pointed up (toward the sky).

4. After the endpoint is mounted in the remote box enclosure, loop the endpoint wire through the strain relief tab and through the cutout on the bottom of the enclosure. If needed, gel splice connections can be made and kept inside the enclosure prior to mounting.

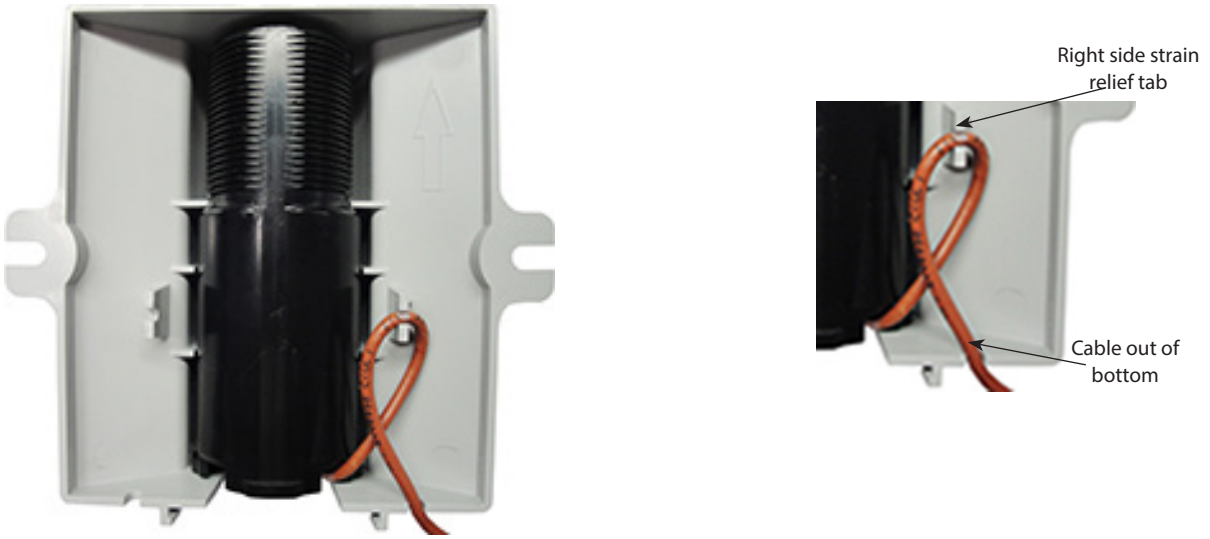

Figure 15: Endpoint wire positioning

5. Verify that the remote box enclosure is properly positioned with the endpoint antenna up and the endpoint IR port facing down. Secure the enclosure to the wall using customer-supplied screws.

Figure 16: Enclosure positioning

IR Programming Bracket (Optional)

To hold the IR programming head in place while performing IR functions on ORION endpoints, an optional **IR Programming Bracket (67625-001)** is available for use with the remote box enclosure. The programming bracket slides into the adapter rails on the bottom of the remote box enclosure to correctly align the optical head of the IR programming cable with the endpoint LED port.

1. Slip the optical head of the IR programming cable into the top of the bracket with the nubs on the head fitted into the cutouts on the bracket.

Optical head of the IR programming cable

Bracket (67625-001) for the optical head

Optical head inserted into bracket

Figure 17: Optical head and bracket

2. Slide the bracket into the adapter rails at the bottom of the enclosure.

Figure 18: IR programming bracket inserted into the adapter rails

3. Connect the IR programming cable to a Badger Meter ORION handheld or mobile reading device and refer to the IR Programming software instructions in the user manuals for those devices.

Remote Installation Bracket Kit

The **Remote Installation Bracket Kit (64394-029)** can be used to properly install an ORION endpoint in any indoor, outdoor or pit application. Prior to beginning the installation procedure, ensure that the following items are available.

- Remote Installation Bracket kit
- Two customer-supplied screws
- Screwdriver and drill

The remote installation bracket securely mounts an ORION endpoint. For non-submerged indoor and outdoor applications, the installation bracket can also be used to enclose gel-cap, wire-splice connections, to protect them from the environment and to prevent tampering in any indoor or outdoor non-metallic joist, wall or pit application.

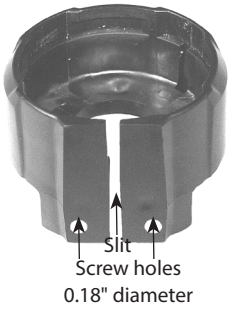

Figure 19: Remote installation bracket

To install the bracket to the endpoint housing, follow these steps.

1. Place the encoder cable harness through the slit in the bracket with the screw holes at the bottom.

   NOTE: Carefully slide the cable harness through the slit in the bracket.

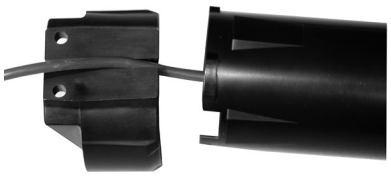

Figure 20: Cable harness threading

2. Locate the small triangle aligned with the small hole on the bottom of the installation bracket. This triangle is used to properly align the endpoint to the installation bracket.

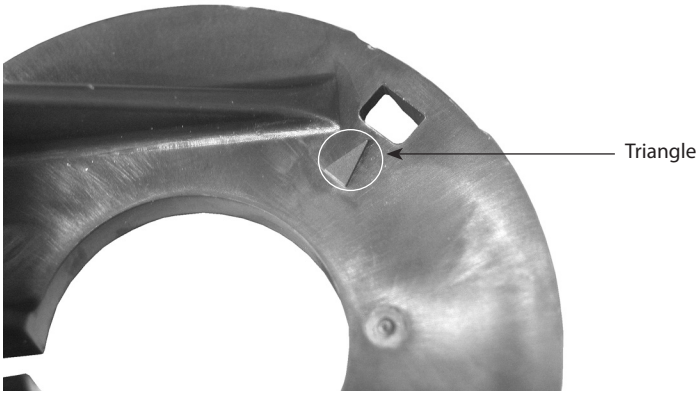

Figure 21: Aligning triangle

On the ORION endpoint, there is a small triangle printed on the lower side of the housing.

Figure 22: Housing triangle

3. Align the two triangles and push the bracket and endpoint together.

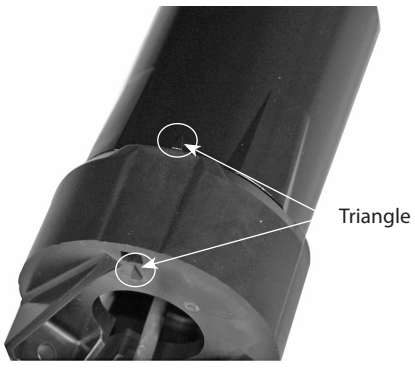

Figure 23: Align both triangles

4. With the installation bracket in one hand and the housing in your other hand, hold the bracket still and twist the housing approximately 1/4 turn clockwise until it clicks and locks into place.

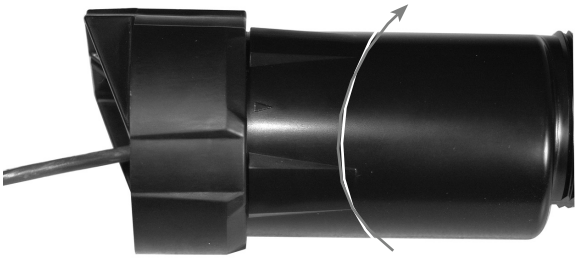

Figure 24: Bracket and housing connection

To install the endpoint assembly, follow these steps.

1. Align the ORION endpoint and the installation bracket with the antenna facing upwards (*Figure 25*).
2. Using two customer-supplied screws, secure the endpoint and installation bracket assembly to a non-metallic joist or wall.

Figure 25: Endpoint positioning

INTEGRAL ENDPOINT INSTALLATION

ORION Fixed Network, Migratable and Classic endpoints are available in an integral configuration, in which the endpoint and encoder are connected in one assembly.

Mounting an Integral Endpoint on the Meter

An integral endpoint can be installed on any Badger Meter disc, turbo or compound meter by mounting the assembly onto the bayonet of the meter and rotating it into its locking position. See *Figure 26: Integral assembly on meter*.

1. Loosen the security screw on the endpoint encoder assembly prior to mounting the assembly on the meter.
2. Mount the assembly housing on the meter bayonet.
3. Turn the assembly clockwise 1/4 turn to lock the assembly into place on the meter.
4. After the assembly is mounted on the meter, tighten the security screw to secure the assembly to the register.

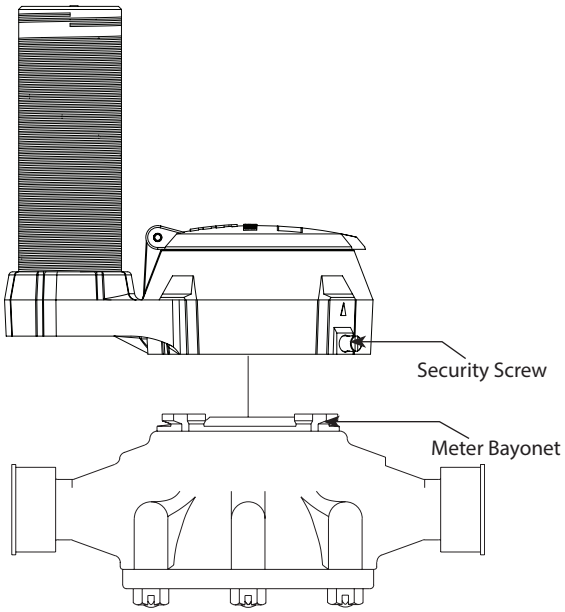

Figure 26: Integral assembly on meter

Integral Endpoint with Three Feet of Wire

An integral endpoint can be ordered with three feet of wire inside the assembly housing. Units with additional wire are marked "3 Ft Wire" on the side of the integral bracket on a serial number label. With this option, the endpoint can be removed from the housing and mounted remote from the encoder. See *"Removing an Integral Endpoint from the Assembly Housing" on page 29*.

Figure 27: Additional wire noted on label

Removing an Integral Endpoint from the Assembly Housing

IMPORTANT

Removing the endpoint from the assembly housing can only be done once. Once removed, the endpoint cannot be reassembled into an integral configuration with the encoder .

⚠CAUTION

PRIOR TO DISASSEMBLING AN INTEGRAL ENDPOINT, VERIFY THAT THE ENDPOINT HAS THREE FEET OF WIRE PACKAGED WITH THE ASSEMBLY. CHECK THE SERIAL NUMBER LABEL ON THE SIDE OF THE INTEGRAL BRACKET TO MAKE SURE IT INDICATES "3 FT WIRE." DO NOT CONTINUE WITH THE STEPS LISTED BELOW IF YOUR INTEGRAL ENDPOINT DOES NOT HAVE THIS DESCRIPTION ON THE SERIAL NUMBER LABEL, AS ENDPOINT DAMAGE WILL OCCUR.

1. Remove the assembly from the meter.
   - Remove the security screw at the base of the assembly.

     NOTE: Make sure to retain the security screw for remounting the encoder assembly in Step 5.
   - Turn the endpoint encoder assembly (as one piece) 1/4 turn, counter-clockwise.
   - Lift the assembly off the meter.

Figure 28: Remove assembly from meter

2. Remove the endpoint wire under the breakaway plate.
   - Turn the endpoint/encoder assembly over.
   - Grasp the pull tab located to the right of the encoder seal screw with pliers (*Figure 29*). Then pull and remove the bottom breakaway plate from the housing to expose the wire. The plate is scored to facilitate removal.
   - With your fingers, remove the three feet of endpoint wire from the housing.

     NOTE: The wire is attached to the endpoint.

Figure 29: Pull tab to remove the breakaway plate

3. Rotate the endpoint counter-clockwise 1/4 turn and pull the endpoint and endpoint wire out from the assembly base.

Figure 30: Rotate endpoint clockwise

Figure 31: Pull endpoint away from base

4. Mount the endpoint according to recommended installation guidelines using the three feet of wire. See *"Endpoint Installation Guidelines" on page 7*.

   NOTE: The encoder cannot be removed from the assembly housing.

5. Remount the encoder in the assembly housing onto the meter bayonet.
   - Turn the assembly clockwise 1/4 turn so it locks in place.
   - Replace and tighten the security screw.

INTENTIONAL BLANK PAGE

Making Water Visible®

ADE, Making Water Visible, ORION and RTR are registered trademarks of Badger Meter, Inc. Other trademarks appearing in this document are the property of their respective entities. Due to continuous research, product improvements and enhancements, Badger Meter reserves the right to change product or system specifications without notice, except to the extent an outstanding contractual obligation exists. © 2014 Badger Meter, Inc. All rights reserved.

www.badgermeter.com

The Americas | Badger Meter | 4545 West Brown Deer Rd | PO Box 245036 | Milwaukee, WI 53224-9536 | 800-876-3837 | 414-355-0400
México | Badger Meter de las Americas, S.A. de C.V. | Pedro Luis Ogazón N°32 | Esq. Angelina N°24 | Colonia Guadalupe Inn | CP 01050 | México, DF | México | +52-55-5662-0882
Europe, Middle East and Africa | Badger Meter Europa GmbH | Nurtinger Str 76 | 72639 Neuffen | Germany | +49-7025-9208-0
Europe, Middle East Branch Office | Badger Meter Europe | PO Box 341442 | Dubai Silicon Oasis, Head Quarter Building, Wing C, Office #C209 | Dubai / UAE | +971-4-371 2503
Czech Republic | Badger Meter Czech Republic s.r.o. | Mařikova 2082/26 | 621 00 Brno, Czech Republic | +420-5-41420411
Slovakia | Badger Meter Slovakia s.r.o. | Racianska 109/B | 831 02 Bratislava, Slovakia | +421-2-44 63 83 01
Asia Pacific | Badger Meter | 80 Marine Parade Rd | 21-06 Parkway Parade | Singapore 449269 | +65-63464836
China | Badger Meter | 7-1202 | 99 Hangzhong Road | Minhang District | Shanghai | China 201101 | +86-21-5763 5412

Legacy Document Number: ORI-I-79-EN

Badger Meter

ORION® Water Endpoints

Classic Endpoint

DESCRIPTION

The ORION® Classic endpoint (CE) is a one-way water endpoint designed for mobile meter reading, which may be transitioned to a fixed network application through approved electric connectivity partner solutions or with a strategic deployment of ORION gateway 4.0 and 2.0 receivers.

The Classic endpoint is a member of the time-tested ORION family of products from Badger Meter, designed for maximum flexibility. Since 2002, the ORION product family has been providing comprehensive Advanced Metering Analytics (AMA) for interval meter reading and data capture using both one-way and two-way communications.

FUNCTIONALITY

Operation: The ORION Classic endpoint continuously monitors the encoder circuit. At predetermined intervals, the endpoint broadcasts the totalized reading value along with other metering data to the mobile collection devices.

Activation: ORION Classic endpoints offer a Smart Activation feature. All ORION endpoints are shipped in an inactive, non-transmitting state. After the endpoint is installed, it begins broadcasting data when the encoder senses the first usage of water. No field programming or tools are required to activate the endpoint.

Broadcast Mode: Classic endpoints broadcast every four seconds.

Data Profiling: Classic endpoints ordered with the data profiling option will store up to 2.4 years of hourly interval data within nonvolatile memory. The information is extracted from the endpoint via IR (infrared) local collection.

Output Message: A Classic endpoint broadcasts its unique endpoint serial number, current meter reading and applicable status indicators.

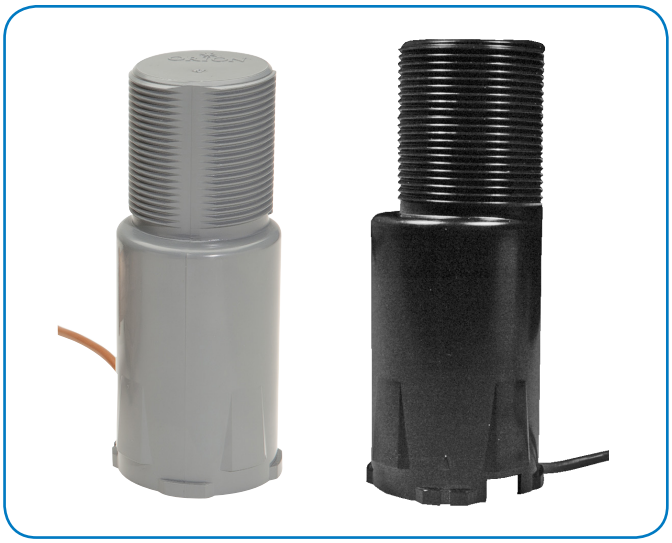

APPLICATION

Configurations: Available in integral, remote or endpoint-only configurations, the ORION Classic endpoint can be deployed in indoor, outdoor and pit applications. The endpoint electronics and battery assembly are fully encapsulated in epoxy for environmental integrity.

Meter Compatibility: When attached to a Badger Meter High Resolution Encoder (HR-E LCD, HR-E), Absolute Digital Encoder (ADE®) or Recordall® Transmitter Register (RTR®), the ORION Classic endpoint is compatible with all current Badger Meter Recordall Disc, Turbo, Compound and Fire Series meters and assemblies, and with E-Series® Ultrasonic and M-Series® Electromagnetic Flow meters.

Encoder Compatibility: The ORION Classic endpoint is suitable for use with all Badger Meter HR-E LCD, ADE and RTR encoders as well as the following Badger Meter approved three-wire encoder registers that have a manufacture date of 2000 or newer, are programmed into the AMR/AMI three-wire output mode and have three-wires connected: Elster AMCO®, ScanCoder® and InVISION; Hersey® Translator; Master Meter® Octave® Ultrasonic meter encoder output; Metron-Farnier Hawkeye; Neptune® ProRead, E-Coder® and ARB® V; and Sensus® ICE and ECR II.

SPECIFICATIONS

Dimensions	5.125" (H); 1.75" (W) at top; 2.125" (W) at bottom
Broadcast Frequency MHz Band	FCC regulated 902-928 MHz frequency hopping modulation
Operating Temperature Range – Storage and Meter Reading	-40°…60° C (-40°…140° F) based on storage and meter reading. RF output may be reduced by extremely low temperatures. The water meter should not be subjected to temperatures below freezing.
Humidity	0% …100% condensing
Battery	Two (2) lithium thionyl chloride AA cell (nonreplaceable)
Battery Life	20 years (calculated)
Endpoint/Encoder or E-Series Ultrasonic Meter Assembly	Badger Meter 308 connector with 6-, 25- or 75-foot lead length
Endpoint Only	3-, 10-, 25- or 75-foot lead length prewired

Construction: All ORION Classic endpoints are housed in an engineered polymer enclosure with an ORION RF board, battery and antenna. To assure long-term performance, the enclosure is fully potted to withstand harsh environments and to protect the electronics in flooded or submerged pit applications.

Range: Transmission reception depends on a number of factors: topographical features, a building's construction materials and obstacles such as buildings, trees, vegetation and fences. Temporary conditions, such as a vehicle parked near the endpoint or heavy rain or snow, could also affect reception. These factors need to be considered when installing or designing a system layout and communicating with the endpoint using a handheld or mobile reading system. For a more in-depth discussion, see the white paper, Understanding RF Propagation of AMR/AMI Systems, available at *www.badgermeter.com*.

FEATURES

Communication Type	One-Way
Application Type	Monitor
Reading Interval Type	Now
Encoder Compatibility	Absolute/Incremental
Mobile Reading	✓
Premise Leak Detection	✓
Cut-Wire Indication	✓
Reverse Flow Indication (Absolute Encoder)	✓
No Usage Indication	✓
Encoder Error (Absolute Encoder)	✓

License Requirements: ORION Classic endpoints comply with Part 15 of the FCC Rules. No license is required by the utility to operate an ORION meter reading system.

Transportation: The Federal Aviation Administration prohibits operating transmitters and receivers on all commercial aircraft. The ORION endpoint is considered an operating transmitter and cannot be shipped by air.

Caution: Changes or modifications to the equipment that are not expressly approved by Badger Meter could void the user's authority to operate the equipment.

Making Water Visible®

ADE, Making Water Visible, ORION, ReadCenter, Recordall and RTR are registered trademarks of Badger Meter, Inc. Other trademarks appearing in this document are the property of their respective entities. Due to continuous research, product improvements and enhancements, Badger Meter reserves the right to change product or system specifications without notice, except to the extent an outstanding contractual obligation exists. © 2014 Badger Meter, Inc. All rights reserved.

www.badgermeter.com

The Americas | Badger Meter | 4545 West Brown Deer Rd | PO Box 245036 | Milwaukee, WI 53224-9536 | 800-876-3837 | 414-355-0400
México | Badger Meter de las Americas, S.A. de C.V. | Pedro Luis Ogazón N°32 | Esq. Angelina N°24 | Colonia Guadalupe Inn | CP 01050 | México, DF | México | +52-55-5662-0882
Europe, Middle East and Africa | Badger Meter Europa GmbH | Nurtinger Str 76 | 72639 Neuffen | Germany | +49-7025-9208-0
Europe, Middle East Branch Office | Badger Meter Europe | PO Box 341442 | Dubai Silicon Oasis, Head Quarter Building, Wing C, Office #C209 | Dubai / UAE | +971-4-371 2503
Czech Republic | Badger Meter Czech Republic s.r.o. | Mařikova 2082/26 | 621 00 Brno, Czech Republic | +420-5-41420411
Slovakia | Badger Meter Slovakia s.r.o. | Racianska 109/B | 831 02 Bratislava, Slovakia | +421-2-44 63 83 01
Asia Pacific | Badger Meter | 80 Marine Parade Rd | 21-06 Parkway Parade | Singapore 449269 | +65-63464836
China | Badger Meter | 7-1202 | 99 Hangzhong Road | Minhang District | Shanghai | China 201101 | +86-21-5763 5412

Legacy Document Number: Excerpt from ORI-DS-00197-EN

7128 Commercial Ave.
Billings, MT. 59101
406.294.4455

Submittals

(Misc. Items)

Project: Sand Coulee Water System Replacement Project

Project Location: Sand Coulee, MT

Supplier: MT Waterworks

Engineer: NCI Engineering Company

General Contractor: Ed Boland Construction, Inc.

* Sump Pipe *

PRINSCO

GOLDFLO WT® DUAL WALL SPECIFICATION

Scope

This specification designates the requirements for 4- through 60- inch I.D. Prinsco GOLDFLO WT® pipe for use in gravity-flow drainage applications.

Pipe Requirements

Prinsco GOLDFLO WT pipe shall have annular exterior corrugations with a smooth interior allowing for a Manning's "n" design value of 0.012 and shall meet the following standards:

- 4- though 10- inch shall meet AASHTO M252, Type S
- 12- through 60- inch shall meet ASTM F2306 or AASHTO M294, Type S

Materials

GOLDFLO WT pipe and fabricated fittings shall be manufactured using High Density Polyethylene (HDPE) meeting the minimum requirements of cell classification of 424420C for 4- through 10- inch diameters and 435400C for 12- through 60- inch diameters, as defined and described in ASTM D3350 except the carbon black content shall be 2 – 4%.

The HDPE pipe material for 12- through 60- inch diameters shall be tested for slow crack growth resistance using the notched constant ligament-stress (NCLS) test as specified in sections 9.4 and 5.1 of AASHTO M294 and ASTM F2306, respectively. Average failure time of the five test specimens shall not be less than 24 hours.

Joint Performance

GOLDFLO WT pipe shall be joined using watertight bell and spigot type joints meeting AASHTO M252, M294 or ASTM F2306. The integral joints shall be watertight according to ASTM D3212. Gaskets shall meet the requirements of ASTM F477 and shall be installed by the manufacturer. An approved joint lubricant, available from the manufacturer, shall be applied to the bell and gasket during installation. GOLDFLO WT joints shall be assembled in accordance with the manufacturer's requirements to ensure installed watertight performance.

Fittings

Fittings shall meet the requirements of AASHTO M252, M294 or ASTM F2306. Standard fittings are available as listed on Prinsco's website www.prinsco.com and custom fittings may be fabricated to customer specific requirements.

Physical Pipe Dimensions

Nominal ID (in)	Approximate OD (in)	Length (ft)	Corrugation Pitch (in)	Approximate Weight/foot (lb)	Min. Pipe Stiffness @ 5% Deflection (psi)
4"	4.6	20	.67	0.5	50
6"	7.1	20	.80	1.0	50
8"	9.5	20	1.00	1.7	50
10"	11.9	20	1.30	2.3	50
12"	14.3	10, 20	2.00	3.1	50
15"	17.5	10, 20	2.67	4.5	42
18"	21.6	11, 20	3.00	6.5	40
→ 24"	28.4	11, 20	4.00	11.0	34
30"	35	11, 20	4.00	14.6	29
36"	41.0	11, 20	4.00/ 4.70*	19.0	22.5
42"	47.5	11, 20	6.00/ 4.70*	25	21
48"	54	11, 20	6.00/ 4.70*	30	20
60"	66.5	12, 20	5.90	40	15

*Contact your Prinsco sales representative to determine actual corrugation pitch.

1717 16th St NE | Willmar, MN 56201 | 800.992.1725 | www.prinsco.com
© Prinsco, Inc. 02/14

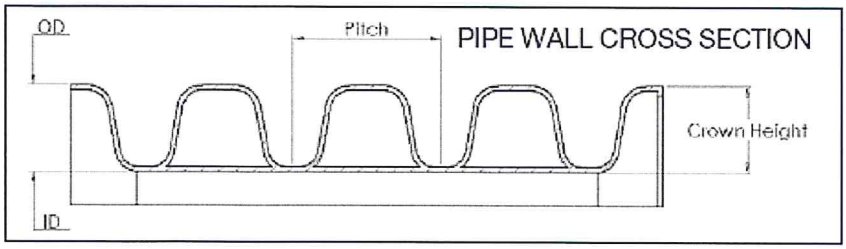

Installation

Pipe and fittings shall be installed in accordance with ASTM D2321 and Prinsco's published installation guidelines. Minimum cover heights for AASHTO H-25 loads shall be 12" for 4- through 48-inch diameter pipe and 18" for 60-inch pipe. The minimum cover shall be measured from the top of the pipe to the bottom of flexible pavement or to the top of rigid pavement. Contact your local Prinsco representative or visit www.prinsco.com for the latest installation guidelines.

Reference Specifications

This specification references the latest edition and revisions of the following standard specifications:

- AASHTO M294 – *Standard Specification for Corrugated Polyethylene Pipe, 300- to 1500-mm (12- to 60-in.) Diameter*
- AASHTO M 252 – *Standard Specification for Corrugated Polyethylene Drainage Pipe*
- ASTM F2306 – *Standard Specification for 12 to 60-in. (300 to 1500 mm) Annular Corrugated Profile-Wall Polyethylene (PE) Pipe and Fittings for Gravity-Flow Storm Sewer and Subsurface Drainage Applications*
- ASTM D3350 – *Standard Specification for Polyethylene Plastics Pipe and Fittings Materials*
- ASTM D477 – *Standard Specification for Elastomeric Seals (Gaskets) for Joining Plastic Pipe*
- ASTM D3212 – *Standard Specification for Joints for Drain and Sewer Plastic Pipes Using Flexible Elastomeric Seals*
- ASTM D2321 – *Standard Practice for Underground Installation of Thermoplastic Pipe for Sewers and Other Gravity-Flow Applications*
- ASTM F2487 – *Standard Practice for Underground Infiltration and Exfiltration Acceptance Testing of Installed Corrugated High Density Polyethylene Pipelines*

1717 16th St NE | Willmar, MN 56201 | 800.992.1725 | www.prinsco.com
© Prinsco, Inc. 02/14

6221M Grate

* Sump Pipe *

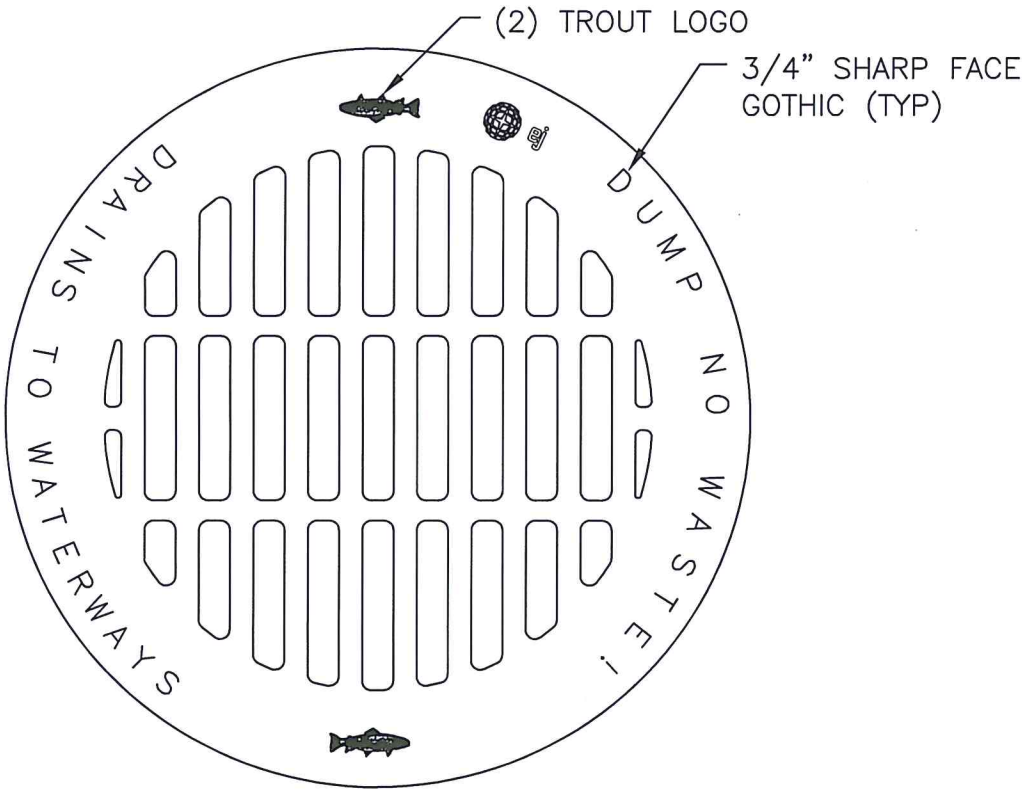

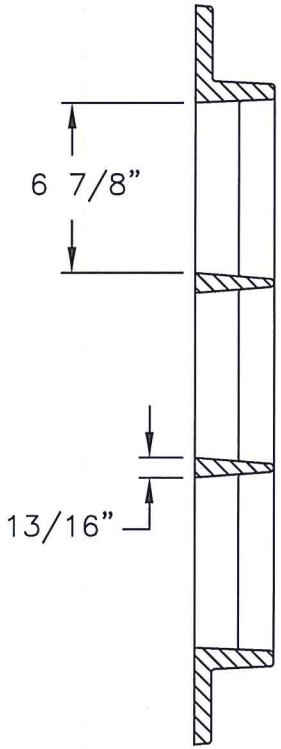

GRATE SECTION

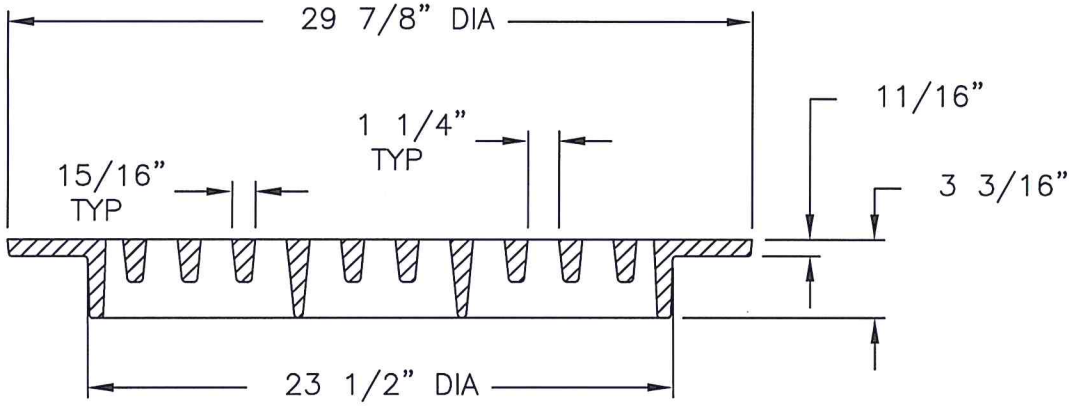

GRATE SECTION

Product Number
00622130

Design Features
-Materials
Gray Iron (CL35B)
-Design Load
Heavy Duty
-Open Area
192 sq in
-Coating
Dipped
- √ Designates Machined Surface

Certification
- ASTM A48
-
-
-Country of Origin: USA

Drawing Revision
07/29/2004 Designer: TCL
01/07/2014 Revised By: DAE

Disclaimer
Weights (lbs./kg) dimensions (inches/mm) and drawings provided for your guidance. We reserve the right to modify specifications without prior notice.

CONFIDENTIAL: This drawing is the property of EJ GROUP, Inc., and embodies confidential information, registered marks, patents, trade secret information, and/or know how that is the property of EJ GROUP, Inc.
Copyright © 2012 EJ GROUP, Inc.
All rights reserved.

Contact
800 626 4653
ejco.com

* Tank Yard Pipe *

SPECIFIED FITTINGS

164 WEST SMITH ROAD, PO BOX 28157
BELLINGHAM, WA 98228-0157

Toll-free telephone and fax
(888) 734-8846 **(888) 734-8258 (F)**
e-mail: sales@specfit.com

SIGNED DRAWINGS MUST ACCOMPANY PURCHASE ORDER OR DIMENSIONS OF FITTINGS WILL NOT BE GUARANTEED

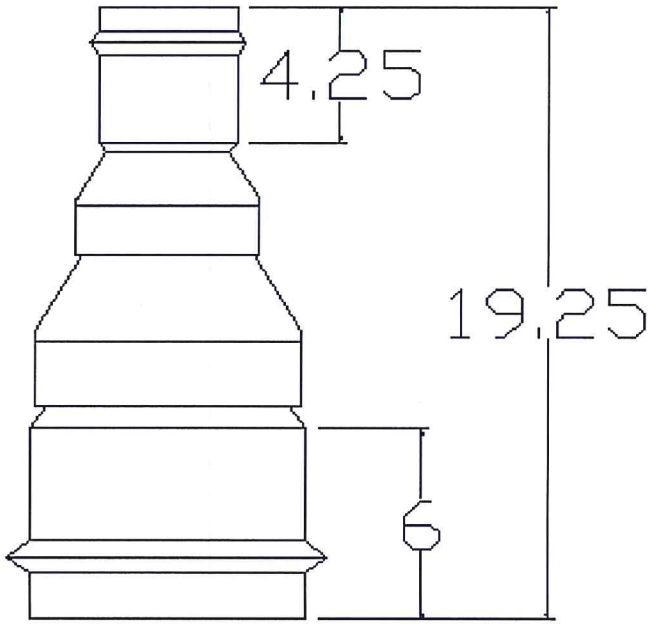

DISCLAIMER - PLEASE READ

1) All dimensions approximate, subject to change without notice
--Angle tolerance is +/- 2 degrees
--All other dimensions to +/- 1"
2) This drawing only applicable if a copy is referenced at time of order.
--Without a copy of drawing, fitting construction may differ from that shown.
3) Subject to Specified Fittings Standard Terms and Conditions.

7/24/2014	
Description:	CONCENTRIC REDUCER
Material:	PVC DR14, SDR 26 FULLY RATED
Size:	6" C900 X 3" IPS
Configuration:	GASKET X GASKET

DE

CRETEX CONCRETE PRODUCTS INC.

DIVISION OF THE CRETEX COMPANIES, INC.
2001 NORTH BENTON AVENUE
HELENA, MT 59601
PHONE: (406) 442-6503
www.cretexconcreteproducts.com

Contractor:	BOLAND CONSTRUCTION CO	Phone:	(406) 761-1063
Customer #:	409270	Order No:	7014216MH1
Project:	Sand Coulee, MT - Water System Replacement	Letting Date:	
		Certification Stamp:	NO
Job Coordinator:	Brian Mohar	Starting Date:	
Job Location:		Release/Fab Date:	
Engineer:			
Sales Rep:	Tanya Jones		

Delivery Notice: Contact our dispatch center to arrange production for this project and schedule your deliveries a minimum of two week prior to your start date.
Central Dispatch: (406) 442-6503
Sales: Tanya Jones (406) 439-7108
Customer Coordinator: Kelly Holshue

Cretex
Concrete Products
2046 Samco Road, Suite 2
Rapid City, SD 57702
Phone: (605) 718-4111
Fax: (605) 718-0808
www.cretexconcreteproducts.com

704946 SUBMITTAL REVEIW

Contractor: BOLAND CONSTRUCTION CO
Project: Sand Coulee, MT – Water System Replacement
Location:
Order Nbr: 7014216MH1
Remarks:

Storm Sewer
48" (I.D.) Manhole
MH: Air Release

Date: 08/05/2014 Revised: 08/05/2014
Plant: 67 HELENA
Coordinator: Kelly Holshue

Design Build Height

Top of Casting	+	7.70
Outlet Invert	–	.00
Wall Thk/Inv Adj	+	.00
Design Height	=	7.70
Casting/Adj Ring	–	1.25
Manhole Hgt	=	6.45

Stack Build Height

Casting	+	.67
Adjusting Ring	+	.58
Cone	+	4.00
Riser	+	2.50
Base Thickness	+	.50
Outside Height	=	8.25

Opening Schedule

(HF=Hole Former, DO=Dig Out)

ID	Pipe Size	Invert	Invert Up	Pipe O.D.	Opening/ Connector	Top of Hole Up	C–Line Hole Up	Btm of Hole Up

Plan View

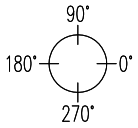

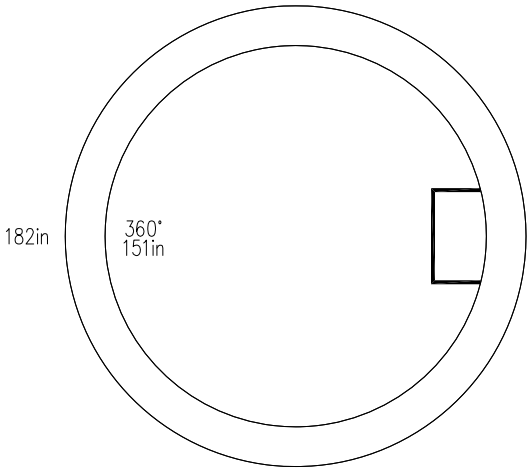

Lifting Device: EZ LiftPin
Steps: 16" On Center 0°

Elevation

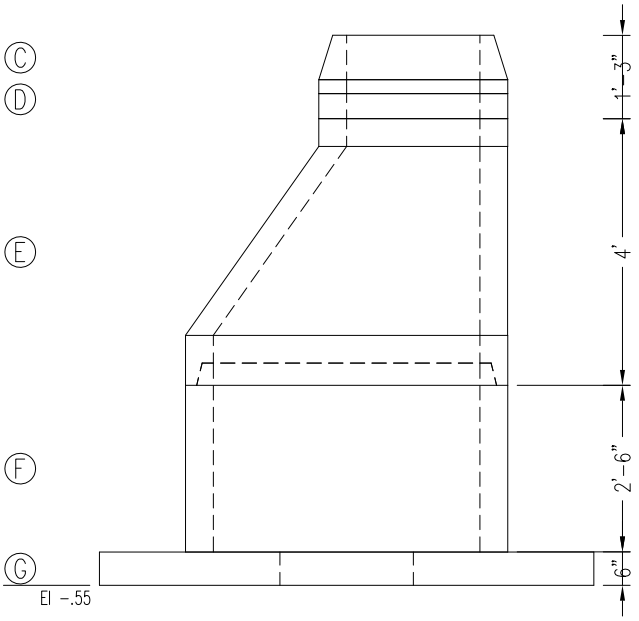

Notes

Required openings by contractor.

Item List

ID	Description	Product No	Hgt	Qty	Weight
A	DL A1019 Inner Lid 30	9000500000013	.00	1	40
B	DL A1018 Cover 309 Water	9000500000014	.00	1	175
C	DL A1018 RING (309)	9000500000015	.67	1	300
D	24x2 Adjusting Ring	9090100240200	.21	1	80
D	24x4 Adjusting Ring	9090100240400	.38	1	160
E	48x4.0 24 Ecc Cone P2 S W/ Joint	20480932100000040	4.00	1	3,300
F	48x2.5 BBL FB P2 S	20480135100000025	2.50	1	2,200
G	64x6 Rng Ftg	23206406000	.50	1	1,034
		Total Weight (lbs)			7,289

Misc. Items

Description	Qty
1in x14.5ft JOINT SEAL	2.09

Production Use

Mfg. Date:	
Ship Date:	
Frame/Ring:	
Grate/Cover:	
PREPOUR:	
POSTPOUR:	

Cretex
Concrete Products
2046 Samco Road, Suite 2
Rapid City, SD 57702
Phone: (605) 718-4111
Fax: (605) 718-0808
www.cretexconcreteproducts.com

704216 SUBMITTAL REVEIW

Contractor: BOLAND CONSTRUCTION CO
Project: Sand Coulee, MT - Water System Replacement
Location:
Order Nbr: 7014216MH1
Remarks:

Storm Sewer
48" (I.D.) Manhole
MH: Tank Level Control 1

Date: 08/05/2014 Revised: 08/05/2014
Plant: 67 HELENA
Coordinator: Kelly Holshue

Design Build Height

Top of Casting	+	7.92
Outlet Invert	-	1.00
Wall Thk/Inv Adj		.02
Sump	+	1.00
Design Height	=	7.92
Casting/Adj Ring	-	.00
Manhole Hgt	=	7.92

Stack Build Height

Cover Slab	+	.92
Mono Base	+	7.00
Base Thickness	+	.50
Outside Height	=	8.42

Pipe Footage

ID	LF	Description

Opening Schedule

(HF=Hole Former, DO=Dig Out)

ID	Pipe Size	Invert	Invert Up	Pipe O.D.	Opening/ Connector	Top of Hole Up	C-Line Hole Up	Btm of Hole Up
#1	8 PVC	1.00	1.00	8.4in	12M PSX:DD BOOT	22in	16in	10in
#2	8 PVC	1.00	1.00	8.4in	12M PSX:DD BOOT	22in	16in	10in

Plan View

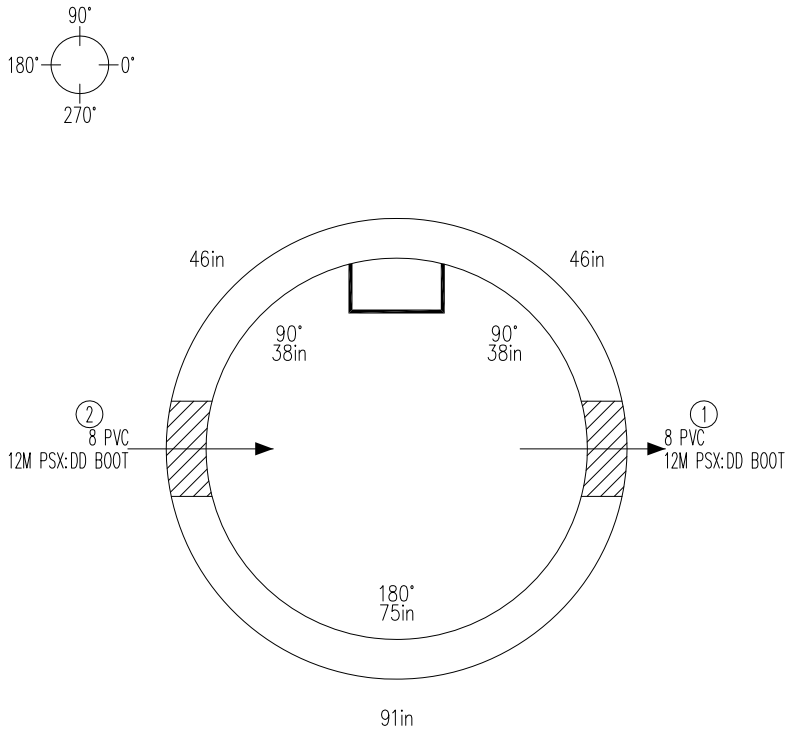

Elevation

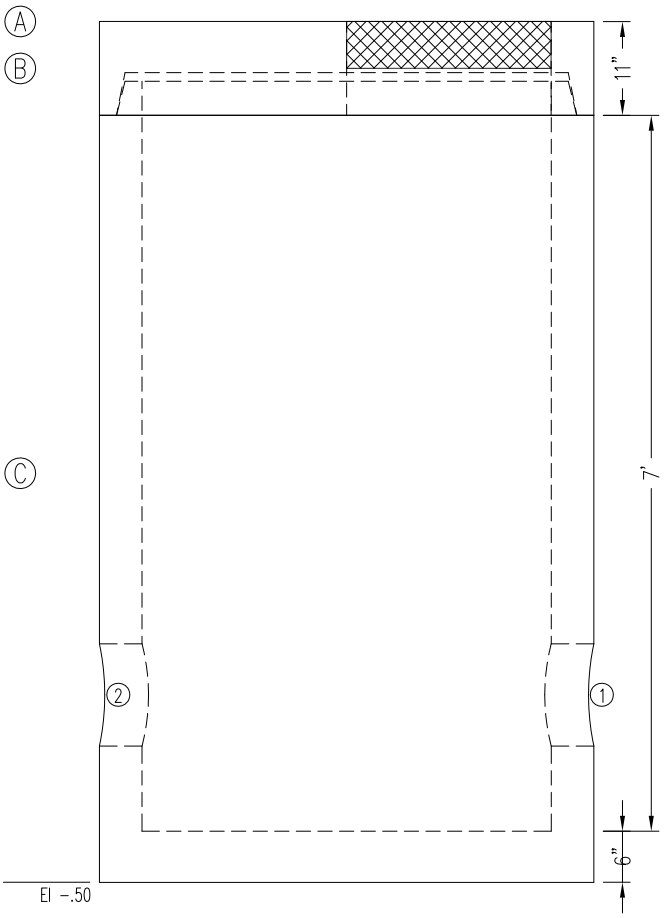

Notes

Lifting Device: EZ LiftPin
Steps: 16" On Center 90° 38in

Item List

ID	Description	Product No	Hgt	Qty	Weight
A	EJIW H24241807 ALUM HATCH	9000100000407	.83	1	0
B	48x6 Cvr Tp2B Cast Ecc P2	2204806230C10	.92	1	1,076
C	48x7.0 Mono P2 S	20480330100000670	7.00	1	7,530
		Total Weight (lbs)			8,606

Misc. Items

Description	Qty
48in P2 Gasket	1
12M PSX:DD BOOT	2

Production Use

Mfg. Date:	
Ship Date:	
Frame/Ring:	
Grate/Cover:	
PREPOUR:	
POSTPOUR:	

Cretex
Concrete Products
2046 Samco Road, Suite 2
Rapid City, SD 57702
Phone: (605) 718-4111
Fax: (605) 718-0808
www.cretexconcreteproducts.com

704216 SUBMITTAL REVEIW

Contractor: BOLAND CONSTRUCTION CO
Project: Sand Coulee, MT – Water System Replacement
Location:
Order Nbr: 7014216MH1
Remarks:

Storm Sewer
48" (I.D.) Manhole
MH: Tank Level Control 2
Date: 08/05/2014
Plant: 67 HELENA
Coordinator: Kelly Holshue

Design Build Height

Top of Casting	+	7.92
Outlet Invert	–	1.00
Wall Thk/Inv Adj		.02
Sump	+	1.00
Design Height	=	7.92
Casting/Adj Ring	–	.00
Manhole Hgt	=	7.92

Stack Build Height

Cover Slab	+	.92
Mono Base	+	7.00
Base Thickness	+	.50
Outside Height	=	8.42

Pipe Footage

ID	LF	Description

Opening Schedule

(HF=Hole Former, DO=Dig Out)

ID	Pipe Size	Invert	Invert Up	Pipe O.D.	Opening/ Connector	Top of Hole Up	C-Line Hole Up	Btm of Hole Up
#1	8 PVC	1.00	1.00	8.4in	12M PSX:DD BOOT	22in	16in	10in
#2	8 PVC	1.00	1.00	8.4in	12M PSX:DD BOOT	22in	16in	10in

Plan View

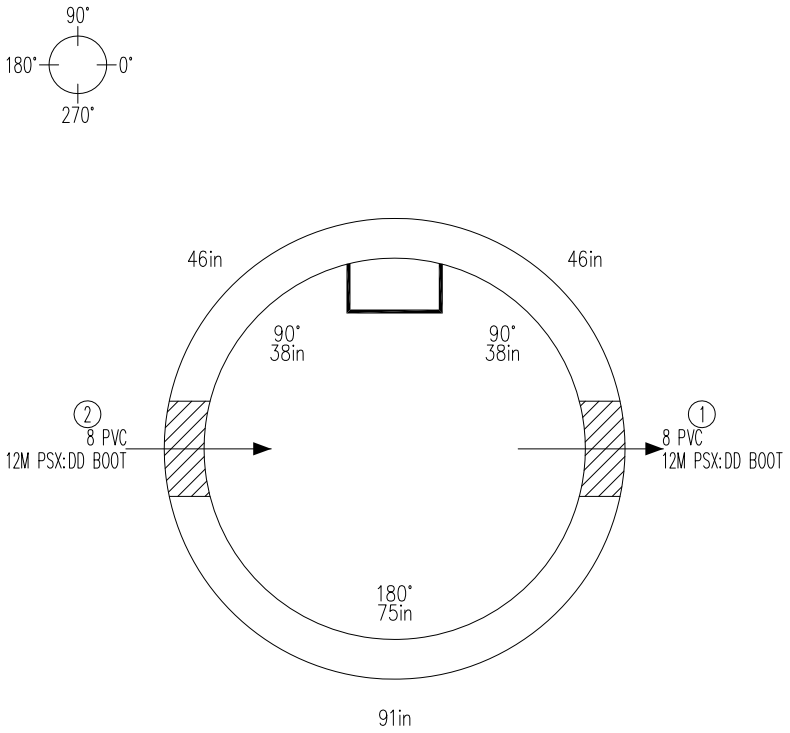

Elevation

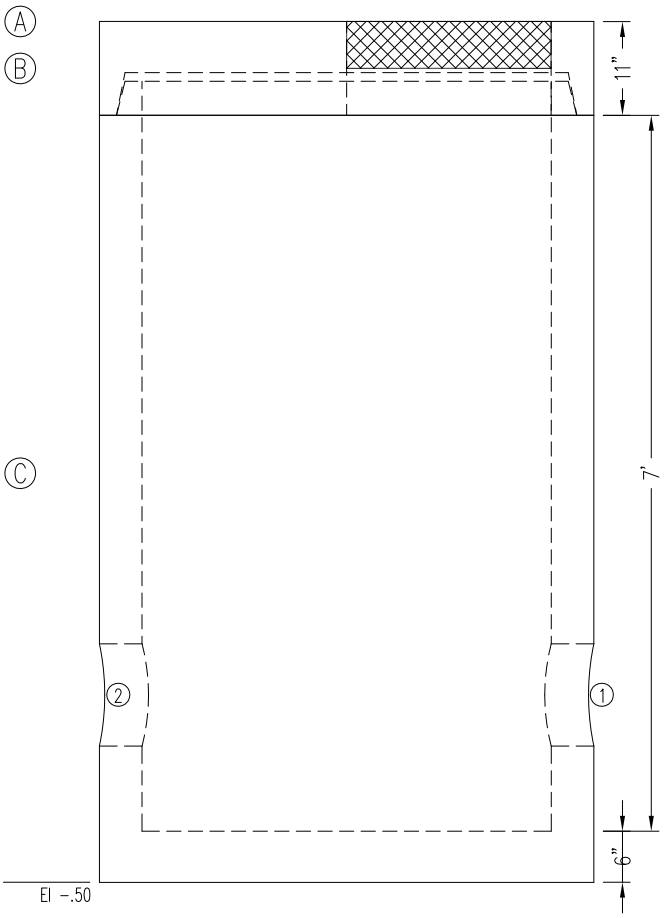

Notes

Lifting Device: EZ LiftPin
Steps: 16" On Center 90° 38in

Item List

ID	Description	Product No	Hgt	Qty	Weight
A	EJIW H24241807 ALUM HATCH	9000100000407	.83	1	0
B	48x6 Cvr Tp2B Cast Ecc P2	2204806230C10	.92	1	1,076
C	48x7.0 Mono P2 S	20480330100000670	7.00	1	7,530
		Total Weight (lbs)			8,606

Misc. Items

Description	Qty
48in P2 Gasket	1
12M PSX:DD BOOT	2

Production Use

Mfg. Date:	
Ship Date:	
Frame/Ring:	
Grate/Cover:	
PREPOUR:	
POSTPOUR:	

Cretex
Concrete Products
2046 Samco Road, Suite 2
Rapid City, SD 57702
Phone: (605) 718-4111
Fax: (605) 718-0808
www.cretexconcreteproducts.com

704946 SUBMITTAL REVEIW

Contractor: BOLAND CONSTRUCTION CO
Project: Sand Coulee, MT – Water System Replacement
Location:
Order Nbr: 7014216MH1
Remarks:

Storm Sewer
48" (I.D.) Manhole
MH: Tank Level Control 3
Date: 08/05/2014
Plant: 67 HELENA
Coordinator: Kelly Holshue

Design Build Height

Top of Casting	+	7.92
Outlet Invert	–	1.00
Wall Thk/Inv Adj		.02
Sump	+	1.00
Design Height	=	7.92
Casting/Adj Ring	–	.00
Manhole Hgt	=	7.92

Stack Build Height

Cover Slab	+	.92
Mono Base	+	7.00
Base Thickness	+	.50
Outside Height	=	8.42

Pipe Footage

ID	LF	Description

Opening Schedule

(HF=Hole Former, DO=Dig Out)

ID	Pipe Size	Invert	Invert Up	Pipe O.D.	Opening/ Connector	Top of Hole Up	C-Line Hole Up	Btm of Hole Up
#1	8 PVC	1.00	1.00	8.4in	12M PSX:DD BOOT	22in	16in	10in
#2	8 PVC	1.00	1.00	8.4in	12M PSX:DD BOOT	22in	16in	10in

Plan View

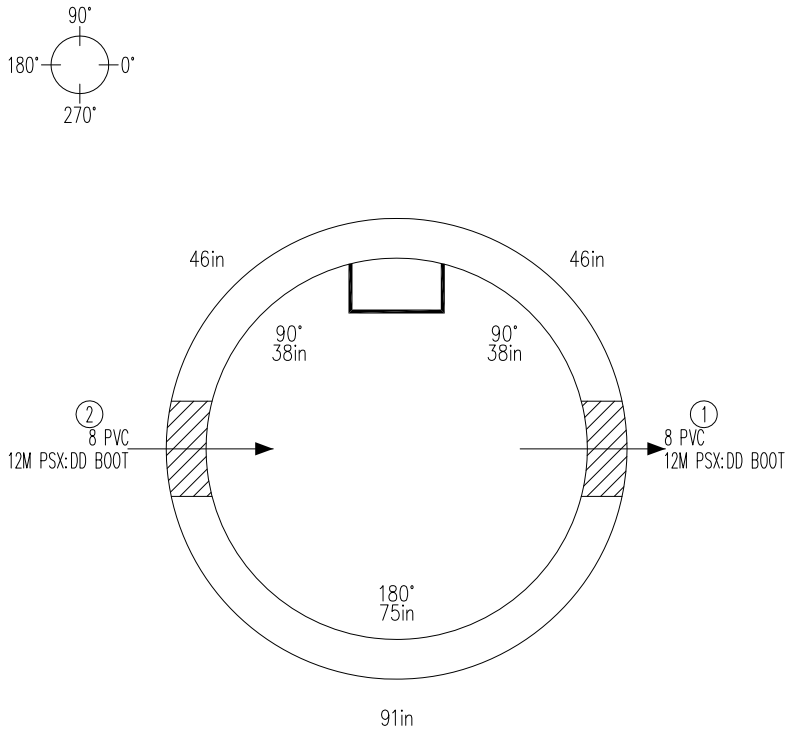

Elevation

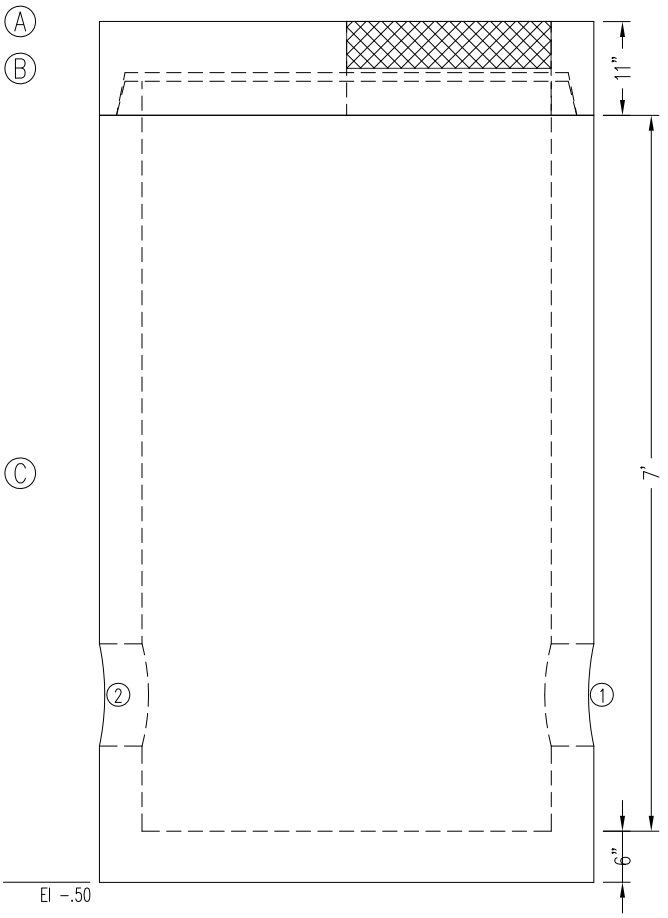

Notes

Lifting Device: EZ LiftPin
Steps: 16" On Center 90° 38in

Item List

ID	Description	Product No	Hgt	Qty	Weight
A	EJIW H24241807 ALUM HATCH	9000100000407	.83	1	0
B	48x6 Cvr Tp2B Cast Ecc P2	2204806230C10	.92	1	1,076
C	48x7.0 Mono P2 S	20480330100000670	7.00	1	7,530
		Total Weight (lbs)			8,606

Misc. Items

Description	Qty
48in P2 Gasket	1
12M PSX:DD BOOT	2

Production Use

Mfg. Date:	
Ship Date:	
Frame/Ring:	
Grate/Cover:	
PREPOUR:	
POSTPOUR:	

Cretex
Concrete Products
2046 Samco Road, Suite 2
Rapid City, SD 57702
Phone: (605) 718-4111
Fax: (605) 718-0808
www.cretexconcreteproducts.com

704216 SUBMITTAL REVEIW

Contractor: BOLAND CONSTRUCTION CO
Project: Sand Coulee, MT – Water System Replacement
Location:
Order Nbr: 7014216MH1
Remarks:

Storm Sewer
48" (I.D.) Manhole
MH: Tank Level Control 4
Date: 08/05/2014
Plant: 67 HELENA
Coordinator: Kelly Holshue

Design Build Height

Top of Casting	+	7.92
Outlet Invert	–	1.00
Wall Thk/Inv Adj		.02
Sump	+	1.00
Design Height	=	7.92
Casting/Adj Ring	–	.00
Manhole Hgt	=	7.92

Stack Build Height

Cover Slab	+	.92
Mono Base	+	7.00
Base Thickness	+	.50
Outside Height	=	8.42

Pipe Footage

ID	LF	Description

Opening Schedule

(HF=Hole Former, DO=Dig Out)

ID	Pipe Size	Invert	Invert Up	Pipe O.D.	Opening/ Connector	Top of Hole Up	C-Line Hole Up	Btm of Hole Up
#1	8 PVC	1.00	1.00	8.4in	12M PSX:DD BOOT	22in	16in	10in
#2	8 PVC	1.00	1.00	8.4in	12M PSX:DD BOOT	22in	16in	10in

Plan View

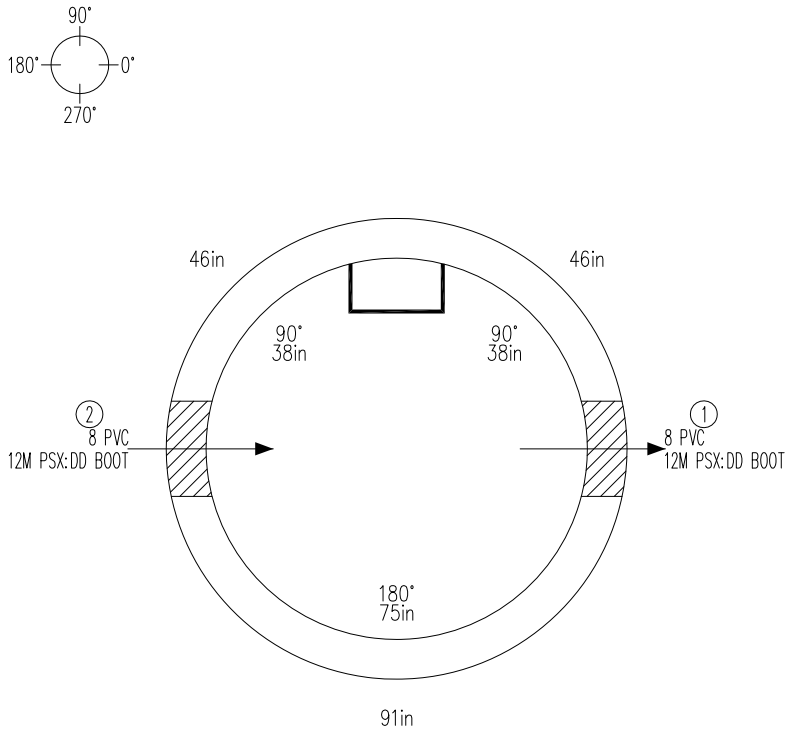

Elevation

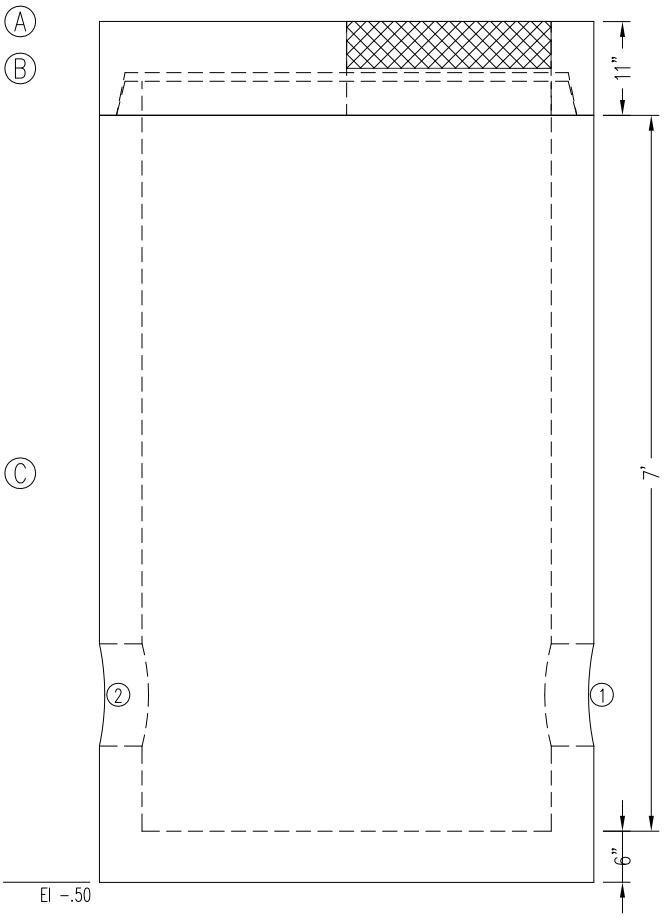

Notes

Lifting Device: EZ LiftPin
Steps: 16" On Center 90° 38in

Item List

ID	Description	Product No	Hgt	Qty	Weight
A	EJIW H24241807 ALUM HATCH	9000100000407	.83	1	0
B	48x6 Cvr Tp2B Cast Ecc P2	2204806230C10	.92	1	1,076
C	48x7.0 Mono P2 S	20480330100000670	7.00	1	7,530
		Total Weight (lbs)			8,606

Misc. Items

Description	Qty
48in P2 Gasket	1
12M PSX:DD BOOT	2

Production Use

Mfg. Date:	
Ship Date:	
Frame/Ring:	
Grate/Cover:	
PREPOUR:	
POSTPOUR:	

Cretex
Concrete Products
2046 Samco Road, Suite 2
Rapid City, SD 57702
Phone: (605) 718-4111
Fax: (605) 718-0808
www.cretexconcreteproducts.com

704216 SUBMITTAL REVEIW

Contractor: BOLAND CONSTRUCTION CO
Project: Sand Coulee, MT – Water System Replacement
Location:
Order Nbr: 7014216MH1
Remarks:

Storm Sewer
48" (I.D.) Manhole
MH: Tank Level Control 5
Date: 08/05/2014
Plant: 67 HELENA
Coordinator: Kelly Holshue

Design Build Height

Top of Casting	+	7.92
Outlet Invert	–	1.00
Wall Thk/Inv Adj		.02
Sump	+	1.00
Design Height	=	7.92
Casting/Adj Ring	–	.00
Manhole Hgt	=	7.92

Stack Build Height

Cover Slab	+	.92
Mono Base	+	7.00
Base Thickness	+	.50
Outside Height	=	8.42

Pipe Footage

ID	LF	Description

Opening Schedule

(HF=Hole Former, DO=Dig Out)

ID	Pipe Size	Invert	Invert Up	Pipe O.D.	Opening/ Connector	Top of Hole Up	C-Line Hole Up	Btm of Hole Up
#1	8 PVC	1.00	1.00	8.4in	12M PSX:DD BOOT	22in	16in	10in
#2	8 PVC	1.00	1.00	8.4in	12M PSX:DD BOOT	22in	16in	10in

Plan View

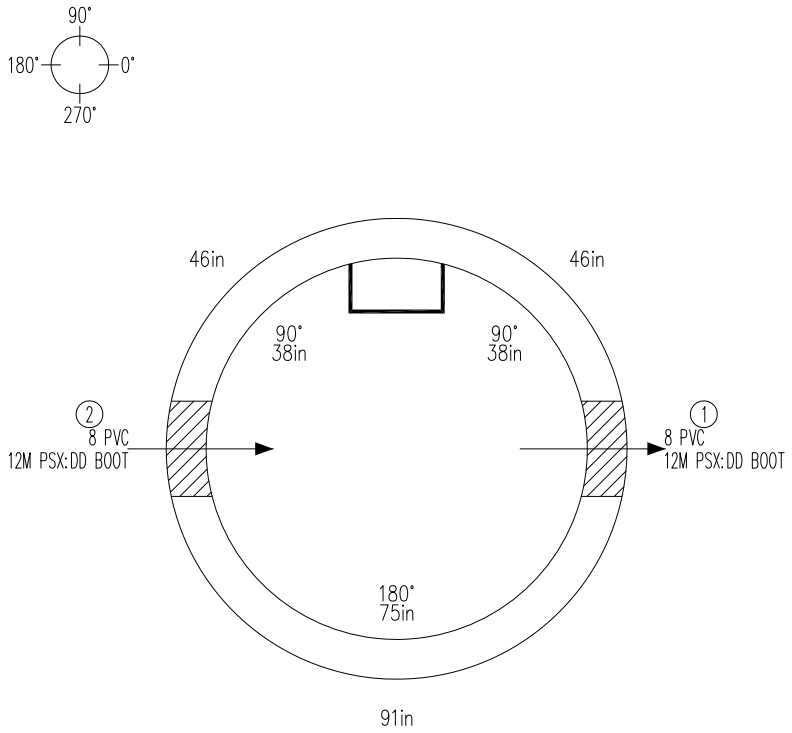

Elevation

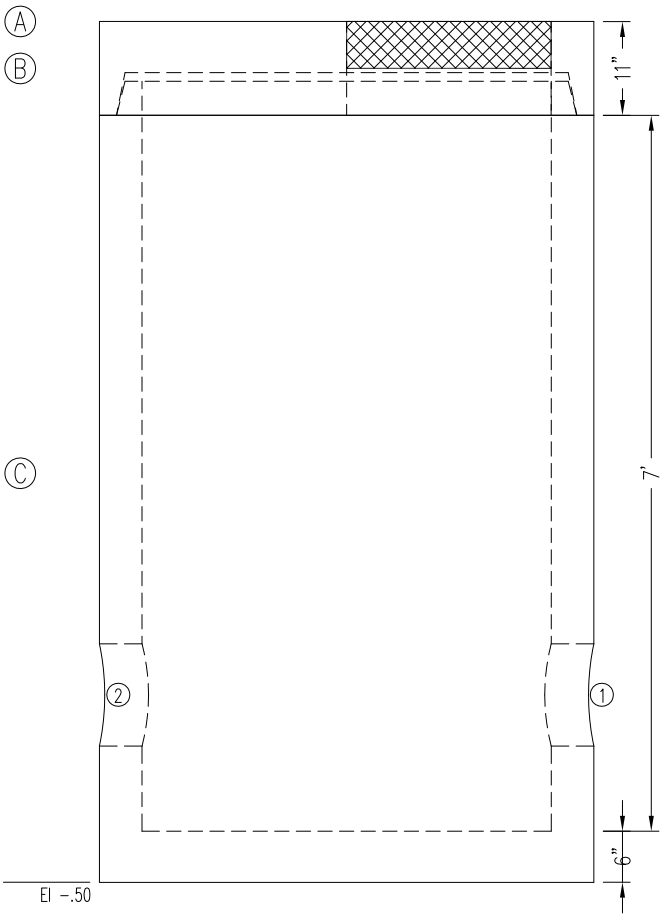

Notes

Lifting Device: EZ LiftPin
Steps: 16" On Center 90° 38in

Item List

ID	Description	Product No	Hgt	Qty	Weight
A	EJIW H24241807 ALUM HATCH	9000100000407	.83	1	0
B	48x6 Cvr Tp2B Cast Ecc P2	2204806230C10	.92	1	1,076
C	48x7.0 Mono P2 S	20480330100000670	7.00	1	7,530
		Total Weight (lbs)			8,606

Misc. Items

Description	Qty
48in P2 Gasket	1
12M PSX:DD BOOT	2

Production Use

Mfg. Date:	
Ship Date:	
Frame/Ring:	
Grate/Cover:	
PREPOUR:	
POSTPOUR:	

Cretex Concrete Products
2046 Samco Road, Suite 2
Rapid City, SD 57702
Phone: (605) 718-4111
Fax: (605) 718-0808
www.cretexconcreteproducts.com

704216 SUBMITTAL REVEIW

Contractor: BOLAND CONSTRUCTION CO
Project: Sand Coulee, MT - Water System Replacement
Location:
Order Nbr: 7014216MH1
Remarks:

Storm Sewer
48" (I.D.) Manhole
MH: Tank Level Control 6
Date: 08/05/2014
Plant: 67 HELENA
Coordinator: Kelly Holshue

Design Build Height

Top of Casting	+	7.92
Outlet Invert	-	1.00
Wall Thk/Inv Adj		.02
Sump	+	1.00
Design Height	=	7.92
Casting/Adj Ring	-	.00
Manhole Hgt	=	7.92

Stack Build Height

Cover Slab	+	.92
Mono Base	+	7.00
Base Thickness	+	.50
Outside Height	=	8.42

Pipe Footage

ID	LF	Description

Opening Schedule

(HF=Hole Former, DO=Dig Out)

ID	Pipe Size	Invert	Invert Up	Pipe O.D.	Opening/ Connector	Top of Hole Up	C-Line Hole Up	Btm of Hole Up
#1	8 PVC	1.00	1.00	8.4in	12M PSX:DD BOOT	22in	16in	10in
#2	8 PVC	1.00	1.00	8.4in	12M PSX:DD BOOT	22in	16in	10in

Plan View

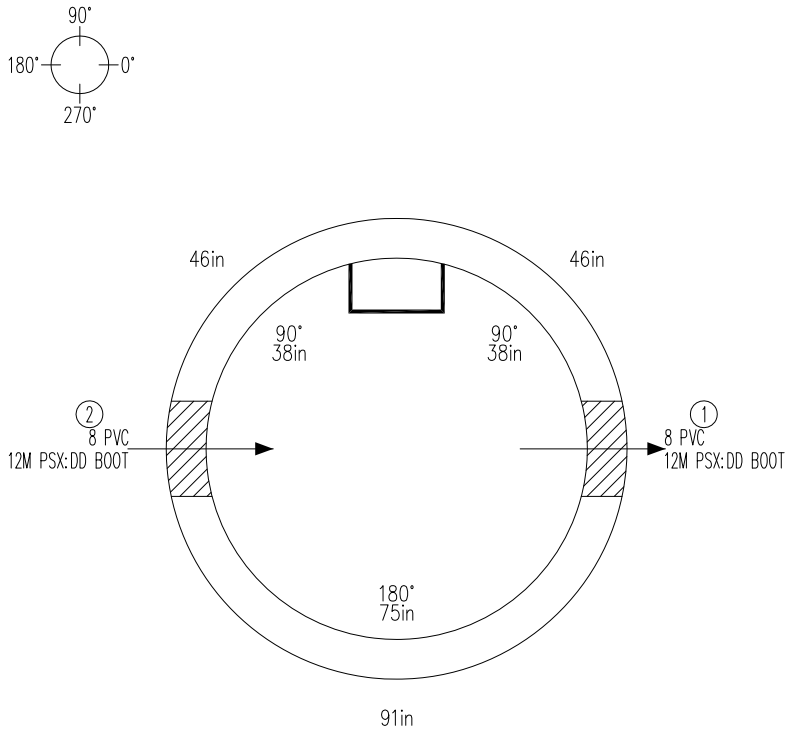

Elevation

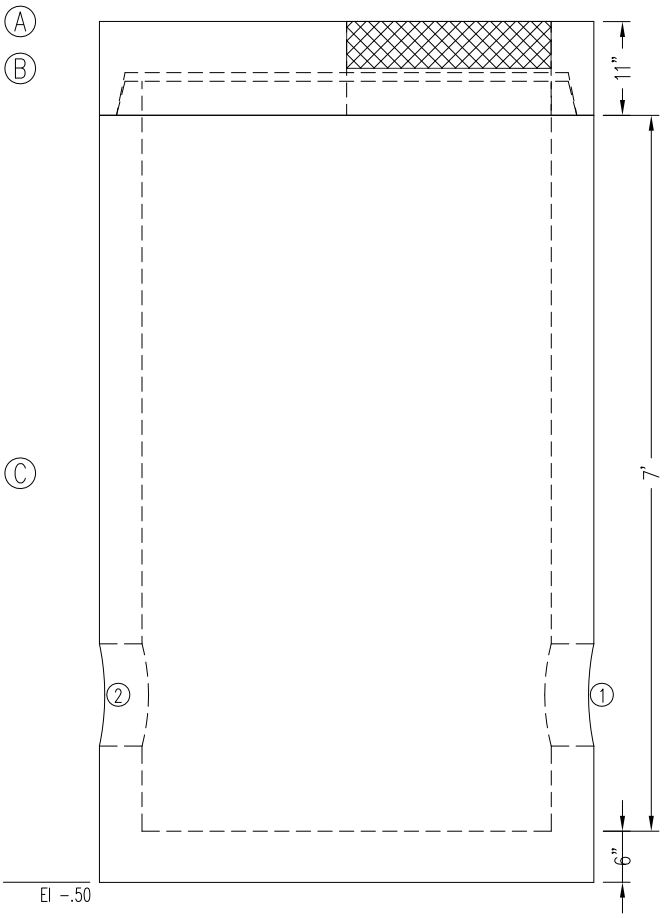

Notes

Lifting Device: EZ LiftPin
Steps: 16" On Center 90° 38in

Item List

ID	Description	Product No	Hgt	Qty	Weight
A	EJIW H24241807 ALUM HATCH	9000100000407	.83	1	0
B	48x6 Cvr Tp2B Cast Ecc P2	2204806230C10	.92	1	1,076
C	48x7.0 Mono P2 S	20480330100000670	7.00	1	7,530
		Total Weight (lbs)			8,606

Misc. Items

Description	Qty
48in P2 Gasket	1
12M PSX:DD BOOT	2

Production Use

Mfg. Date:	
Ship Date:	
Frame/Ring:	
Grate/Cover:	
PREPOUR:	
POSTPOUR:	

Cretex Concrete Products
2046 Samco Road, Suite 2
Rapid City, SD 57702
Phone: (605) 718-4111
Fax: (605) 718-0808
www.cretexconcreteproducts.com

704216 SUBMITTAL REVEIW

Contractor: BOLAND CONSTRUCTION CO
Project: Sand Coulee, MT - Water System Replacement
Location:
Order Nbr: 7014216MH1
Remarks:

Storm Sewer
48" (I.D.) Manhole
MH: Tank Level Control 7
Date: 08/05/2014
Plant: 67 HELENA
Coordinator: Kelly Holshue

Design Build Height

Top of Casting	+	7.92
Outlet Invert	-	1.00
Wall Thk/Inv Adj		.02
Sump	+	1.00
Design Height	=	7.92
Casting/Adj Ring	-	.00
Manhole Hgt	=	7.92

Stack Build Height

Cover Slab	+	.92
Mono Base	+	7.00
Base Thickness	+	.50
Outside Height	=	8.42

Pipe Footage

ID	LF	Description

Opening Schedule

(HF=Hole Former, DO=Dig Out)

ID	Pipe Size	Invert	Invert Up	Pipe O.D.	Opening/ Connector	Top of Hole Up	C-Line Hole Up	Btm of Hole Up
#1	8 PVC	1.00	1.00	8.4in	12M PSX:DD BOOT	22in	16in	10in
#2	8 PVC	1.00	1.00	8.4in	12M PSX:DD BOOT	22in	16in	10in

Plan View

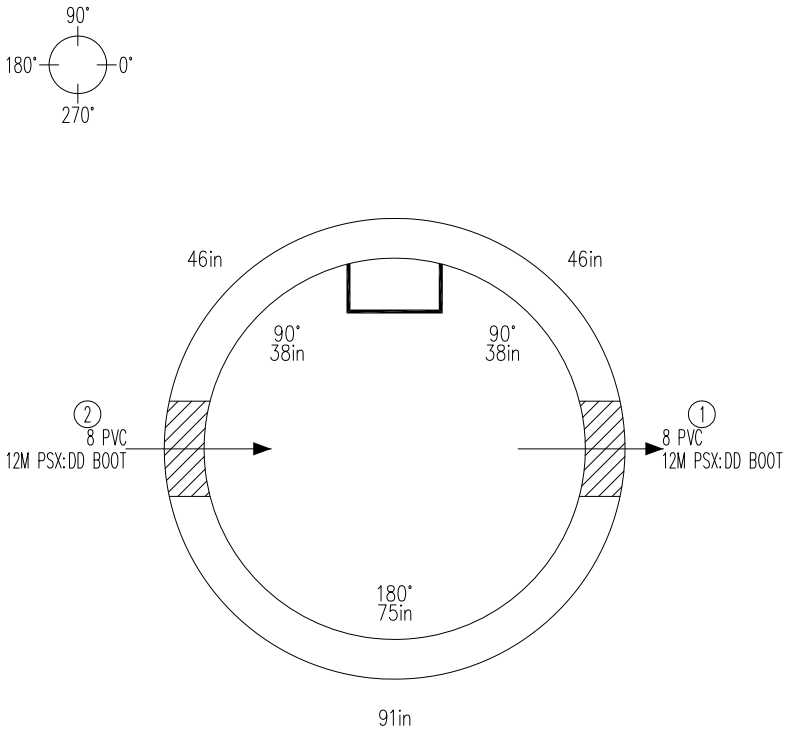

Elevation

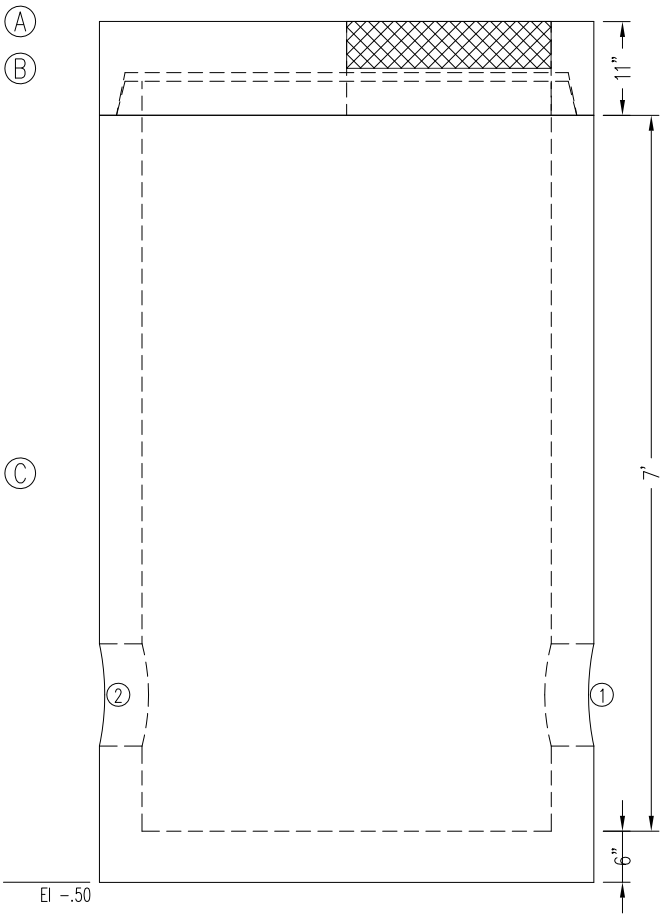

Notes

Lifting Device: EZ LiftPin
Steps: 16" On Center 90° 38in

Item List

ID	Description	Product No	Hgt	Qty	Weight
A	EJIW H24241807 ALUM HATCH	9000100000407	.83	1	0
B	48x6 Cvr Tp2B Cast Ecc P2	2204806230C10	.92	1	1,076
C	48x7.0 Mono P2 S	20480330100000670	7.00	1	7,530
		Total Weight (lbs)			8,606

Misc. Items

Description	Qty
48in P2 Gasket	1
12M PSX:DD BOOT	2

Production Use

Mfg. Date:	
Ship Date:	
Frame/Ring:	
Grate/Cover:	
PREPOUR:	
POSTPOUR:	

Cretex
Concrete Products
2046 Samco Road, Suite 2
Rapid City, SD 57702
Phone: (605) 718-4111
Fax: (605) 718-0808
www.cretexconcreteproducts.com

704046 SUBMITTAL REVEIW

Contractor: BOLAND CONSTRUCTION CO
Project: Sand Coulee, MT – Water System Replacement
Location:
Order Nbr: 7014216MH1
Remarks:

Storm Sewer
96" (I.D.) Catch Basin
CB: Pressure Reducing Sta

Date: 08/05/2014
Plant: 67 HELENA
Coordinator: Kelly Holshue

Design Build Height

Top of Casting	+	19.00
Outlet Invert	–	11.30
Wall Thk/Inv Adj		.04
Sump	+	1.00
Design Height	=	8.70
Casting/Adj Ring	–	.00
Manhole Hgt	=	8.70

Stack Build Height

Cover Slab	+	.67
Riser	+	4.00
Mono Base	+	4.00
Base Thickness	+	.67
Outside Height	=	9.33

Pipe Footage

ID	LF	Description

Opening Schedule

(HF=Hole Former, DO=Dig Out)

ID	Pipe Size	Invert	Invert Up	Pipe O.D.	Opening/ Connector	Top of Hole Up	C–Line Hole Up	Btm of Hole Up
#1	6 DIP	11.30	1.00	6.9in	12Y PSX	21in	15in	9in
#2	6 DIP	11.30	1.00	6.9in	12Y PSX	21in	15in	9in

Elevation

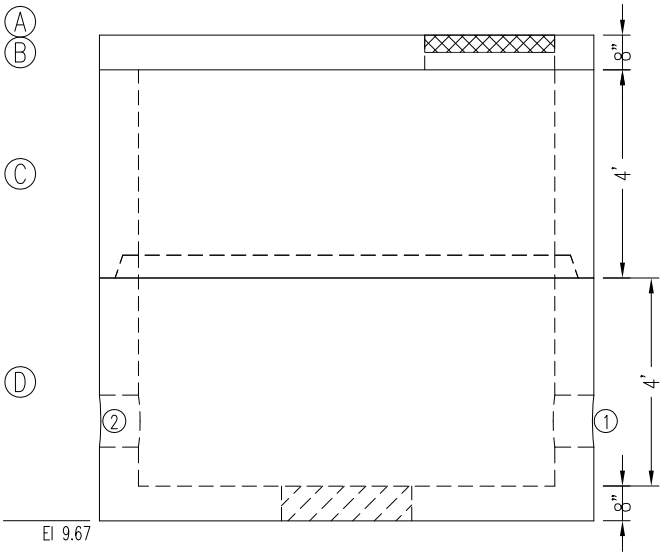

Plan View

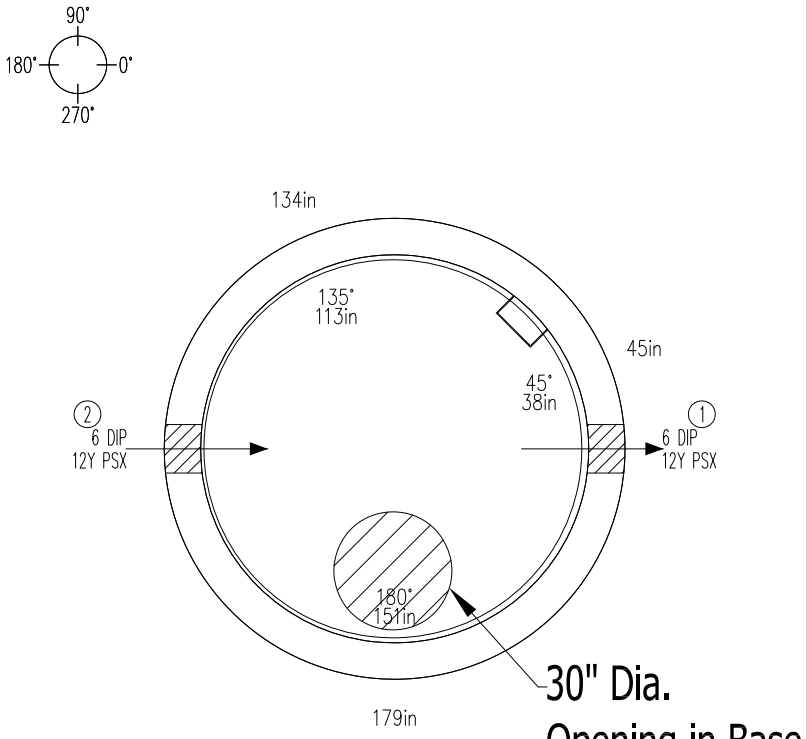

Lifting Device: 8UA671
Steps: 16" On Center 45° 38in

Notes

Contractor to provide metal grate at base sump pit. All other required openings by contractor.

Item List

ID	Description	Product No	Hgt	Qty	Weight
A	EJIW H30301807 ALUM HATCH	9000100000406	.83	1	0
B	96x8 Cvr Tp2 Cast Ecc NoJt	2209608000C10	.67	1	6,463
C	96x4.0 BBL FT CX4 S	20960164100000040	4.00	1	12,612
D	96x4.0 Mono CX4 S	20960360100000840	4.00	1	19,458
			Total Weight (lbs)		38,533

Misc. Items

Description	Qty
12Y PSX	2
1in x14.5ft JOINT SEAL	16.47

Production Use

Mfg. Date:	
Ship Date:	
Frame/Ring:	
Grate/Cover:	
PREPOUR:	
POSTPOUR:	

Cretex Concrete Products
2046 Samco Road, Suite 2
Rapid City, SD 57702
Phone: (605) 718-4111
Fax: (605) 718-0808
www.cretexconcreteproducts.com

Contractor: BOLAND CONSTRUCTION CO
Project: Sand Coulee, MT – Water System Replacement
Location:
Order Nbr: 7014216MH1
Remarks:

Storm Sewer

96" (I.D.) Manhole

MH: Flow Meter

Date: 08/05/2014 Revised: 08/05/2014
Plant: 67 HELENA
Coordinator: Kelly Holshue

Design Build Height

Top of Casting	+	92.80
Outlet Invert	–	85.10
Wall Thk/Inv Adj		.03
Sump	+	1.00
Design Height	=	8.70
Casting/Adj Ring	–	.00
Manhole Hgt	=	8.70

Stack Build Height

Cover Slab	+	.67
Riser	+	4.00
Mono Base	+	4.00
Base Thickness	+	.67
Outside Height	=	9.33

Pipe Footage

ID	LF	Description

Opening Schedule

(HF=Hole Former, DO=Dig Out)

ID	Pipe Size	Invert	Invert Up	Pipe O.D.	Opening/ Connector	Top of Hole Up	C-Line Hole Up	Btm of Hole Up
#1	4 DIP	85.10	1.00	4.8in	8QRS PSX:DD BOOT	18in	14in	10in
#2	4 DIP	85.10	1.00	4.8in	8QRS PSX:DD BOOT	18in	14in	10in

Plan View

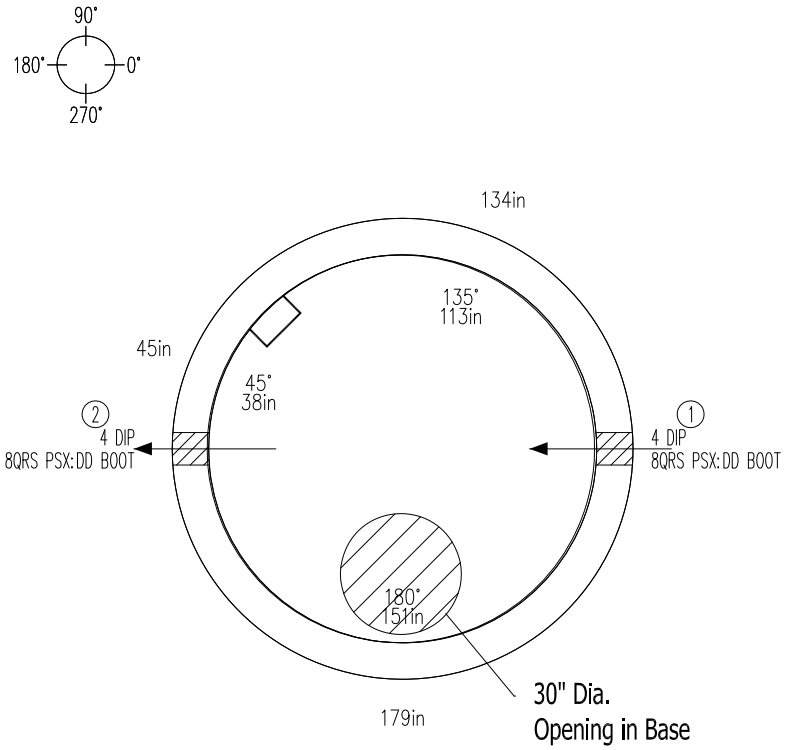

Lifting Device: 8UA671
Steps: 16" On Center 135° 113in

Elevation

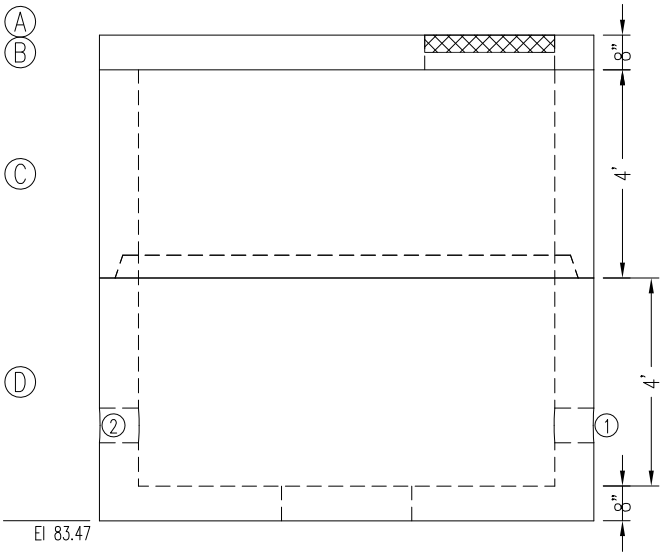

Notes

Contractor to provide metal grate at base sump pit. Contractor to field core openings for Tank Bypass Line, elec penetrations, and all other required openings.

Item List

ID	Description	Product No	Hgt	Qty	Weight
A	EJIW H30301807 ALUM HATCH	9000100000406	.83	1	0
B	96x8 Cvr Tp2 Cast Ecc NoJt	2209608000C10	.67	1	6,463
C	96x4.0 BBL FT CX4 S	20960164100000040	4.00	1	12,612
D	96x4.0 Mono P2 S	20960330100000840	4.00	1	19,458
			Total Weight (lbs)		38,533

Misc. Items

Description	Qty
8QRS PSX:DD BOOT	2
1in x14.5ft JOINT SEAL	16.47

Production Use

Mfg. Date:	
Ship Date:	
Frame/Ring:	
Grate/Cover:	
PREPOUR:	
POSTPOUR:	

Cretex Concrete Products
2046 Samco Road, Suite 2
Rapid City, SD 57702
Phone: (605) 718-4111
Fax: (605) 718-0808
www.cretexconcreteproducts.com

704216 SUBMITTAL REVEIW

Contractor: BOLAND CONSTRUCTION CO
Project: Sand Coulee, MT – Water System Replacement
Location:
Order Nbr: 7014216MH1
Remarks:

Storm Sewer
24" (I.D.) Catch Basin
CB: Overflow/Drain

Date: 08/05/2014 Revised: 08/05/2014
Plant: 67 HELENA
Coordinator: Kelly Holshue

Design Build Height

Top of Casting	+	4.17
Outlet Invert	–	.17
Wall Thk/Inv Adj		.02
Sump	+	.17
Design Height	=	4.17
Casting/Adj Ring	–	.00
Manhole Hgt	=	4.17

Stack Build Height

Mono Base	+	4.20
Base Thickness	+	.50
Outside Height	=	4.70

Pipe Footage

ID	LF	Description

Opening Schedule

(HF=Hole Former, DO=Dig Out)

ID	Pipe Size	Invert	Invert Up	Pipe O.D.	Opening/ Connector	Top of Hole Up	C–Line Hole Up	Btm of Hole Up
#1	8 PVC	.17	.17	8.4in	12" HOLE	12in	6in	0in

Plan View

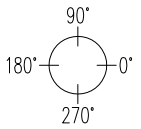

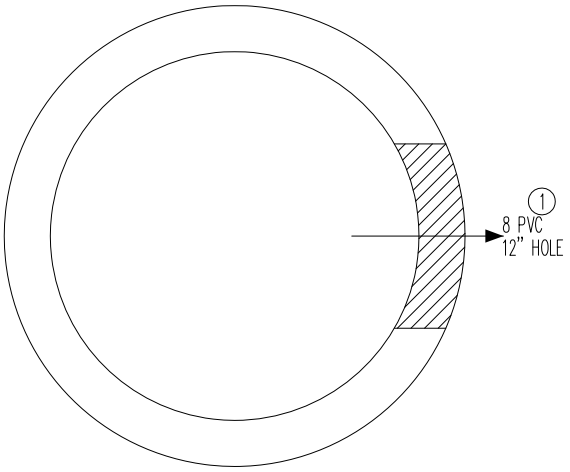

Steps: None

Elevation

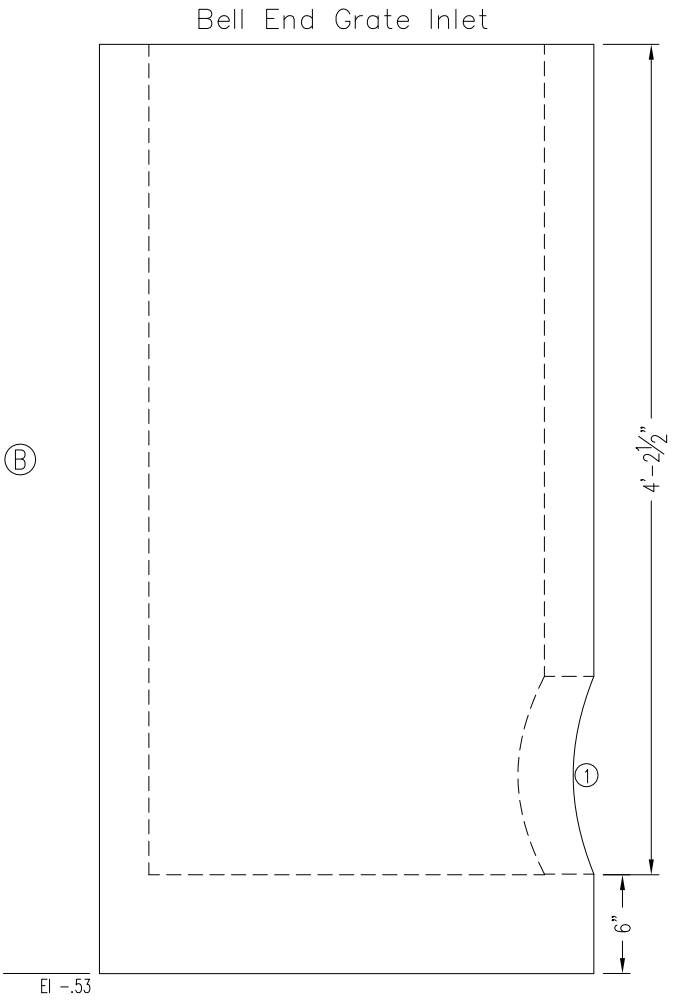

Notes

Bell End Grate Inlet

Item List

ID	Description	Product No	Hgt	Qty	Weight
A	DL J4412 24" PIPE GRATE	9000500000253	.00	1	130
B	24x4.2 Mono Spl	202403Z0000000642	4.20	1	1,481
			Total Weight (lbs)		1,611

Misc. Items

Description	Qty
24in Spl Gasket	1

Production Use

Mfg. Date:	
Ship Date:	
Frame/Ring:	
Grate/Cover:	
PREPOUR:	
POSTPOUR:	

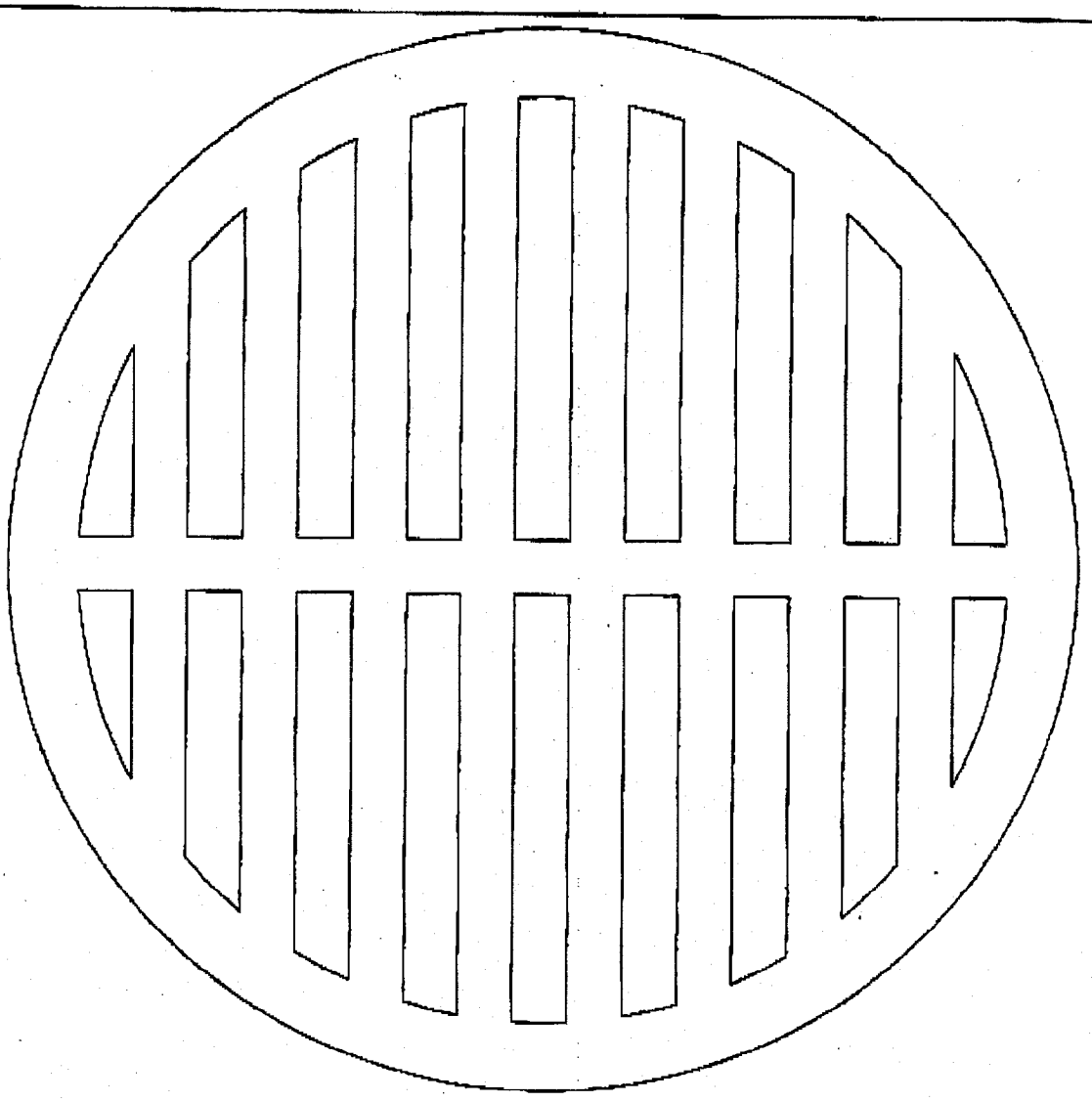

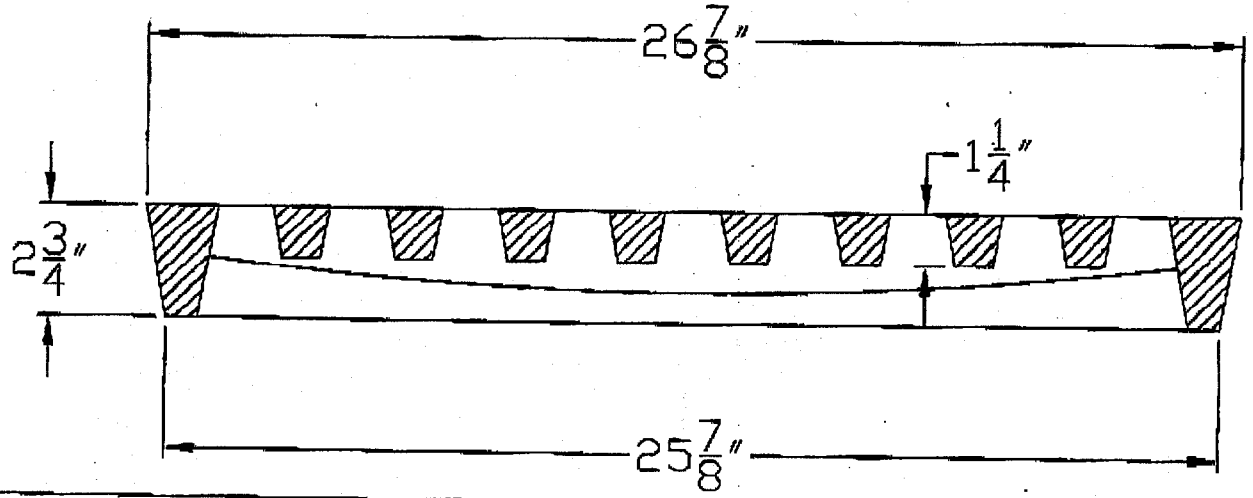

CAST IRON TO CONFORM TO ASTM A-48, CLASS 35B

J-4412
D&L Model No.
Prepared by: ADAM KROUPA
D&L Foundry (Not to Scale)
Date: 7-8-05

D&L Foundry & Supply
California Sales: (800)-422-0848
Washington Sales: (888)-765-0054
Utah Sales: (800)-453-9802

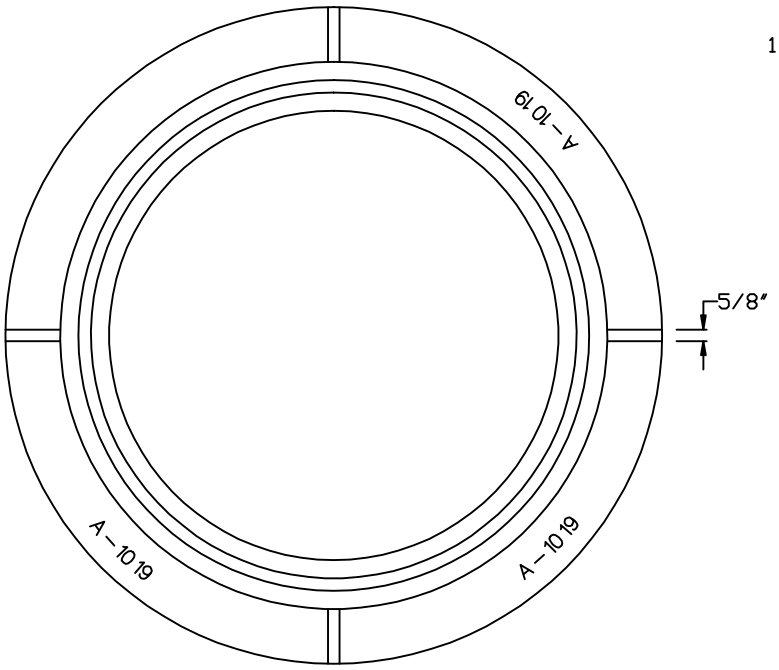

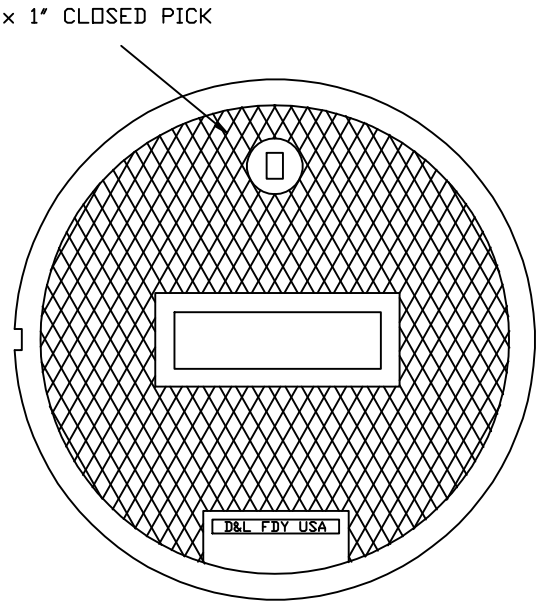

AVAILABLE WITH BLANK, WATER,
OR SEWER IN CENTER PLAQUE

3/16" STEEL FROST-PROOF COVER

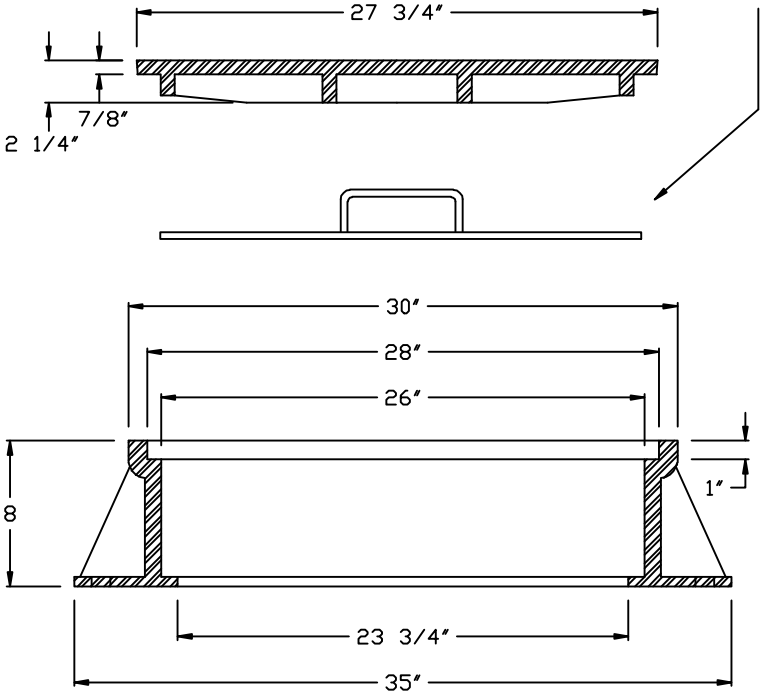

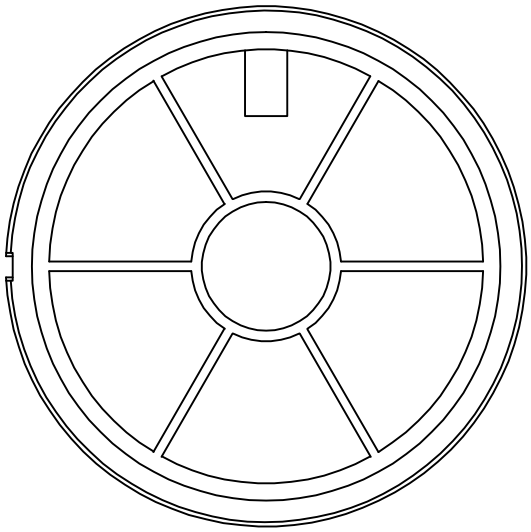

WEIGHTS: (lbs)
RING: 300
COVER: 169
INNER PAN: 13

CAST IRON TO CONFORM TO ASTM A-48, CLASS 35B MEETS 25,000LB WHEEL LOADING	A-1019 D&L MODEL # DRAWN BY: Mason Utter D&L Foundry (Not to Scale) DATE: 05-19-07	D&L FOUNDRY & SUPPLY CALIFORNIA SALES: (800)-422-0848 WASHINGTON SALES: (888)-765-0054 UTAH SALES: (800)-453-9802

CHS1 Heavy Duty H-20 Rated Aluminum Hatch

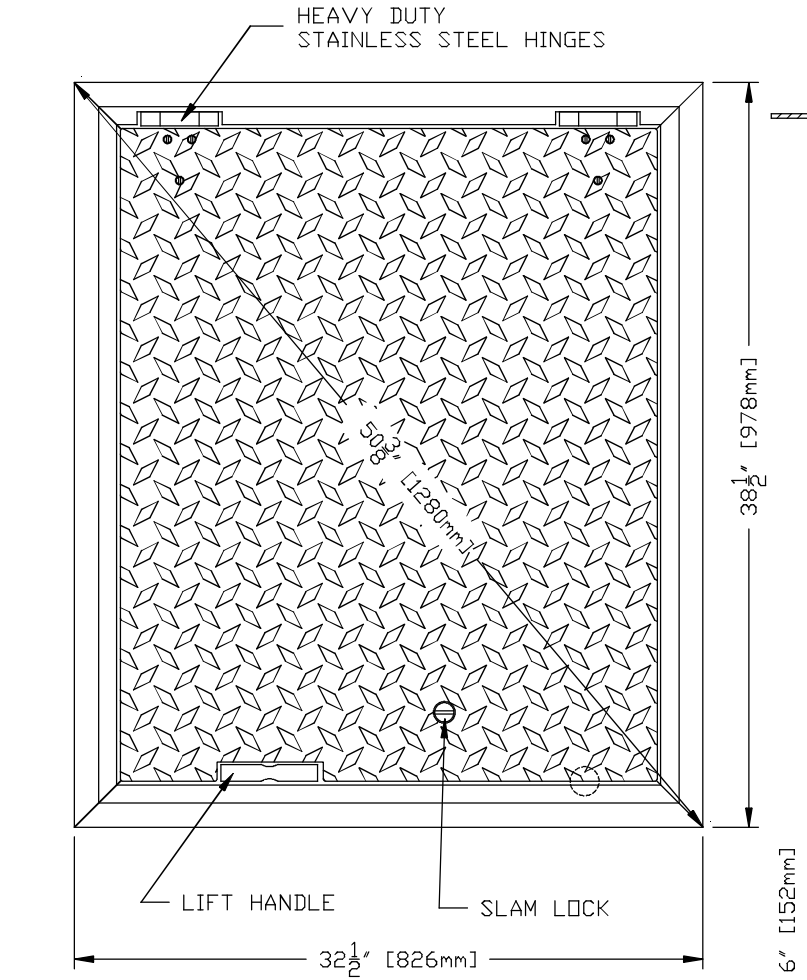

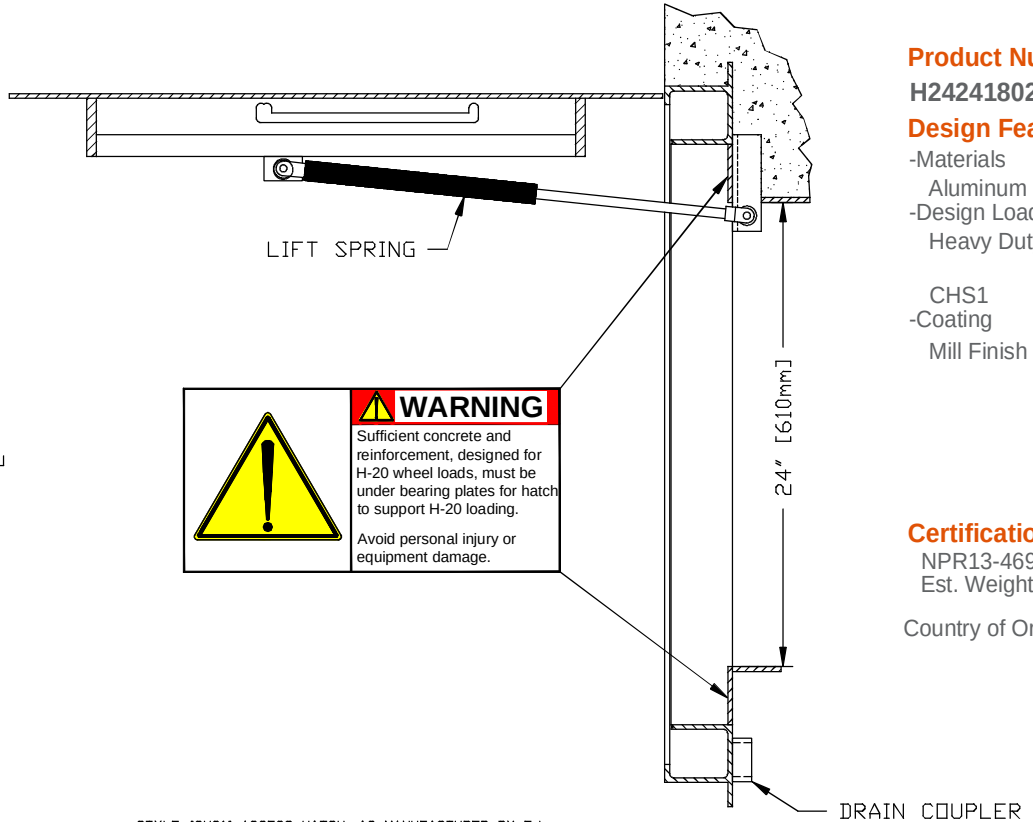

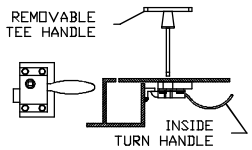

STAINLESS STEEL SLAM LOCK

STYLE "CHS1" ACCESS HATCH, AS MANUFACTURED BY EJ.

MATERIAL SHALL BE 6061-T6 ALUMINUM FOR BARS, ANGLES, AND EXTRUSIONS. 1/4" DIAMOND PLATE SHALL BE 5086 ALUMINUM.

UNIT DESIGNED HEAVY DUTY, FOR 16,000 LBS + 30% IMPACT H-20 WHEEL LOADS, OVER A 10" X 20" CONTACT AREA. FRAME AND BEARING PLATE MUST BE CAST INTO AND SUPPORTED BY CONCRETE DESIGNED FOR H-20 WHEEL LOADS.

UNIT NOT SUITABLE FOR WHEEL LINE PLACEMENT.

UNIT SUPPLIED WITH A HEAVY DUTY PNEU-SPRING, FOR EASE OF OPERATION WHEN OPENING COVER. COVER SHALL BE COUNTERBALANCED, SO ONE PERSON CAN EASILY OPEN THE HATCH DOOR.

FRAME SHALL BE OF EXTRUDED ALUMINUM WITH A CONTINUOUS 1-1/4" ANCHOR FLANGE. A DOVETAIL GROOVE SHALL BE EXTRUDED INTO THE SEAT OF THE FRAME FOR A 1/8" SILICONE GASKET.

EACH HATCH SHALL BE EQUIPPED WITH A STAINLESS STEEL HOLD OPEN ARM. DOOR SHALL LOCK OPEN IN THE 90 DEGREE POSITION. HOLD OPEN ARM SHALL BE FASTENED TO THE FRAME WITH A 1/2" GRADE 316 STAINLESS STEEL BOLT.

HINGES SHALL BE OF HEAVY DUTY DESIGN. MATERIAL SHALL BE GRADE 316 STAINLESS STEEL. EACH HINGE SHALL HAVE A GRADE 316 STAINLESS STEEL, 3/8" DIAMETER HINGE PIN. HINGE SHALL BE FASTENED TO THE CHANNEL FRAME AND DIAMOND PLATE WITH GRADE 316 STAINLESS STEEL BOLTS AND NY-LOCK NUTS.

ALUMINUM SHALL BE SUPPLIED WITH MILL FINISH. EXTERIOR OF FRAME WHICH COMES IN CONTACT WITH CONCRETE SHALL HAVE ONE COAT BLACK PRIMER.

EACH HATCH SHALL BE SUPPLIED WITH A STAINLESS STEEL SLAM LOCK, WITH THE KEY WAY PROTECTED BY A THREADED ALUMINUM PLUG. THE PLUG SHALL BE FLUSH WITH THE TOP OF THE 1/4" DIAMOND PLATE. THE SLAM LOCK SHALL BE FASTENED WITH GRADE 316 STAINLESS STEEL BOLTS AND WASHERS.

EACH HATCH SHALL BE EQUIPPED WITH A STAINLESS STEEL LIFT HANDLE. LIFT HANDLE SHALL BE FLUSH WITH TOP OF 1/4" DIAMOND PLATE.

EACH "CHS1" STYLE HATCH IS SUPPLIED WITH A 1-1/2" THREADED DRAIN COUPLER ON THE UNDERSIDE OF CHANNEL FRAME, FOR PIPE CONNECTION.

Product Number

H24241802

Design Features

-Materials
Aluminum
-Design Load
Heavy Duty (Not in Driving Lane)

CHS1
-Coating
Mill Finish

Certification

NPR13-4696
Est. Weight = 94 lbs

Country of Origin: Made in USA

Drawing Revision

10/22/13 Designer: MAW
Revised By:

Disclaimer

Weights (lbs/kg), dimensions (inches/mm) and drawings provided for your guidance. We reserve the right to modify specifications without prior notice.

CONFIDENTIAL: This drawing is the property of EJ Group, Inc. and embodies confidential information, registered marks, patents, trade secret information, and/or know-how that is the property of EJ Group, Inc. Copyright © 2011 EJ Group, Inc. All rights reserved.

Contact

800 626 4653
ejco.com

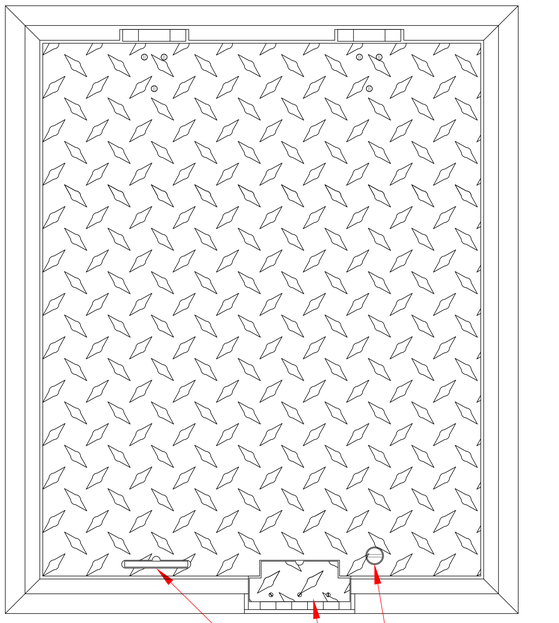

PLAN VIEW

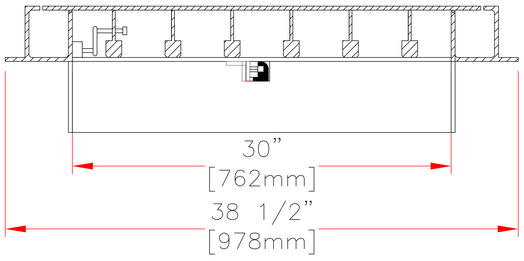

DRAWING NOT TO SCALE

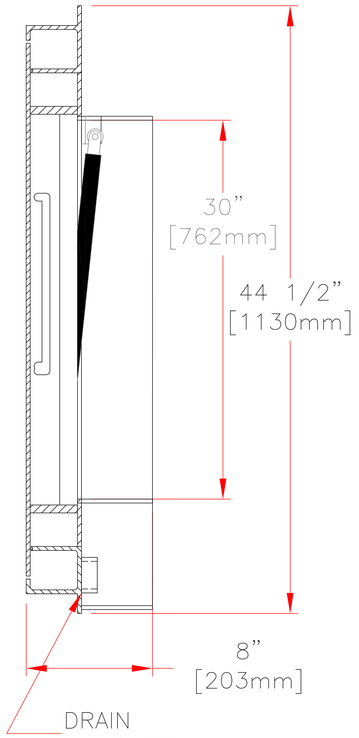

SECTION VIEW

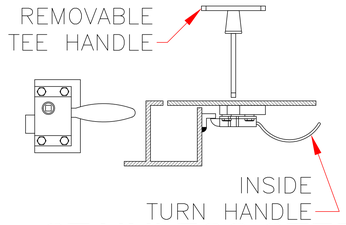

SECTION VIEW

STAINLESS STEEL
SLAM LOCK

NOTES:

1.) UNIT DESIGNED FOR 16,000 LBS + 30 % IMPACT OVER 10" X 20" FOOT PRINT.

2.) UNIT NOT SUITABLE FOR WHEEL LINE PLACEMENT.

3.) MATERIAL SHALL BE 6061-T6 ALUMINUM FOR BARS, ANGLES, AND EXTRUSIONS. 1/4" DIAMOND PLATE SHALL BE 5086 ALUMINUM.

4.) UNIT SUPPLIED WITH A HEAVY DUTY PNEU-SPRING, FOR EASE OF OPERATION WHEN OPENING COVER. COVER SHALL BE COUNTERBALANCED, SO ONE PERSON CAN EASILY OPEN THE HATCH DOOR.

5.) FRAME SHALL BE OF EXTRUDED ALUMINUM WITH A CONTINUOUS 1-1/4" ANCHOR FLANGE. A DOVETAIL GROOVE SHALL BE EXTRUDED INTO THE SEAT OF THE FRAME FOR A 1/8" SILICONE GASKET.

6.) EACH HATCH SHALL BE EQUIPPED WITH A STAINLESS STEEL HOLD OPEN ARM. DOOR SHALL LOCK OPEN IN THE 90 DEGREE POSITION. HOLD OPEN ARM SHALL BE FASTENED TO THE FRAME WITH A 1/2" GRADE 316 STAINLESS STEEL BOLT.

7.) HINGES SHALL BE OF HEAVY DUTY DESIGN. MATERIAL SHALL BE GRADE 316 STAINLESS STEEL. EACH HINGE SHALL HAVE A GRADE 316 STAINLESS STEEL, 3/8" DIAMETER HINGE PIN. HINGE SHALL BE FASTENED TO THE CHANNEL FRAME AND DIAMOND PLATE WITH GRADE 316 STAINLESS STEEL BOLTS AND NY-LOCK NUTS.

8.) ALUMINUM SHALL BE SUPPLIED WITH MILL FINISH. EXTERIOR OF FRAME WHICH COMES IN CONTACT WITH CONCRETE SHALL HAVE ONE COAT BLACK PRIMER.

9.) EACH HATCH SHALL BE SUPPLIED WITH A RECESSED PADLOCK CLIP (PADLOCK BY OTHERS).

10.) EACH HATCH SHALL BE EQUIPPED WITH A STAINLESS STEEL LIFT HANDLE. LIFT HANDLE SHALL BE FLUSH WITH TOP OF 1/4" DIAMOND PLATE.

11.) EACH "CHS1" STYLE HATCH IS SUPPLIED WITH A 1-1/2" THREADED DRAIN COUPLER ON THE UNDERSIDE OF CHANNEL FRAME, FOR PIPE CONNECTION.

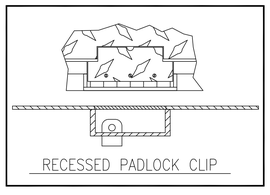

RECESSED PADLOCK CLIP

(Padlock Supplied By Others)

PRODUCT NUMBER

H30301807

DESIGN FEATURES

MATERIALS
ALUMINUM
-SEE NOTES

DESIGN LOAD
SEE NOTES

COATING
MILL FINISH

OPEN AREA
N/A

√ DESIGNATES MACHINED SURFACE

INCLUDED FEATURES

ALTERNATE OPTIONS

REFERENCE INFORMATION

CHS1

EST. WEIGHT = 115 LBS 52 kg

DRAWING DETAILS

ORIGINAL DRAWING: CJC 10/07/2008

REVISED BY: MAW 08/24/2011

Corporate
Headquarters
301 Spring Street
PO Box 439
East Jordan, MI
49727-0439
800.874.4100

EJ GROUP ®

Call Today for More Information

800.626.4653 EJIW EAST JORDAN IRON WORKS EST.1883 WE COVER YOUR INFRASTRUCTURE® www.ejiw.com MADE IN THE USA

- Weights (lbs./kg.) dimensions (inches/mm., and drawings provided for your guidance.
- We reserve the right to modify specifications without prior notice.
- Uncontrolled distribution.

CONFIDENTIAL: This drawing is the property of East Jordan Iron works, Inc., and embodies confidential information, registered marks, trade secret information, and/or know how that is the property of East Jordan Iron Works, Inc. ©Copyright 2009 East Jordan Iron Works, Inc.

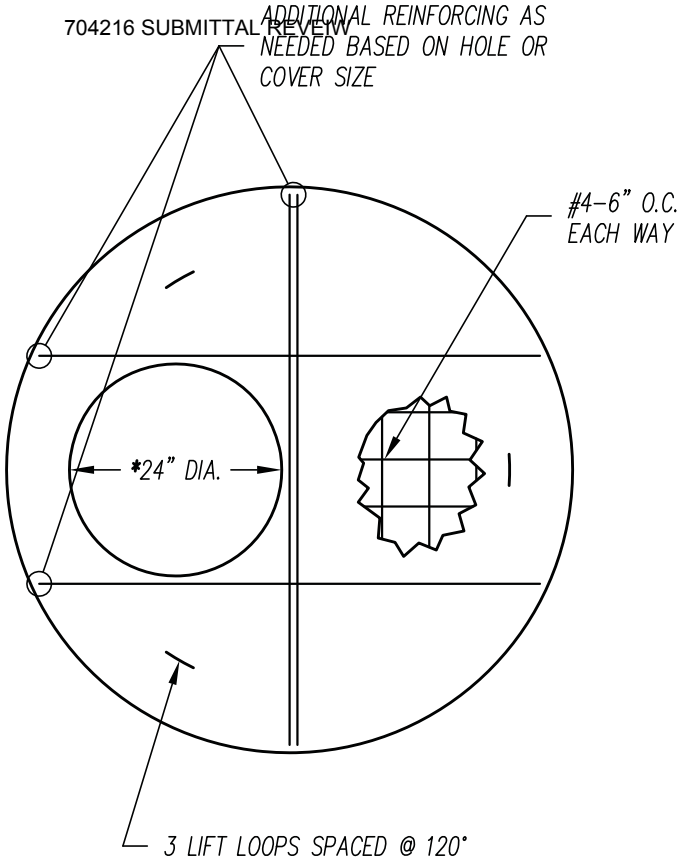

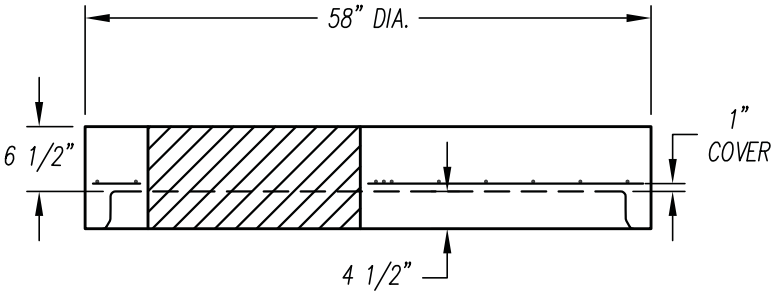

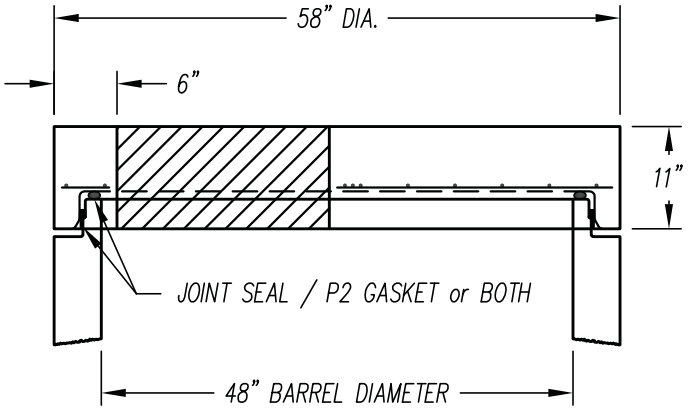

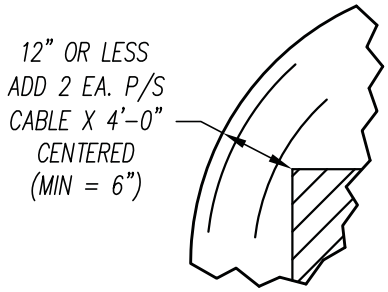

COVER SLAB WEIGHS APPROXIMATELY 1,650 LBS

DETAIL FOR COVERS WITH RECTANGULAR OPENINGS

0.60 PS CABLE MAY BE SUBSTITUTED FOR #4 REBAR @ SAME SPACING

1. Slabs are manufactured per ASTM C478.
* 2. Various sizes of round or rectangular openings are available. Cover designed for HS20 Load regardless of opening size.
3. Various sizes of round or rectangular castings can be embedded.
4. Special sizes are available upon request.

Cretex Concrete Products West, Inc.

OFFICES IN: BISMARCK HELENA RAPID CITY

SCALE NONE	TITLE: STANDARD 48" TYPE 2B COVER SLAB
DATE 1/02/07	
DR'N BY MPM	
REV DATE 11/13/09 TDE	DWG NAME MT1310–11

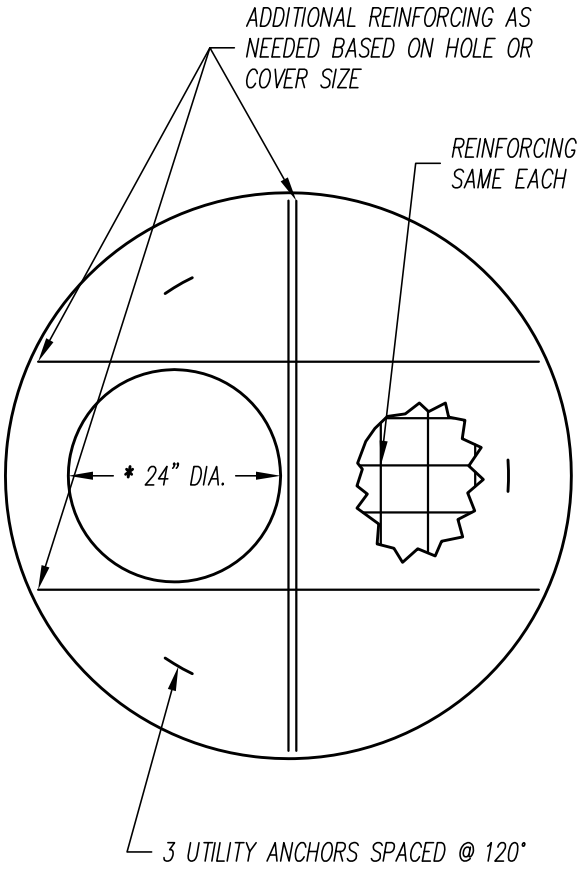

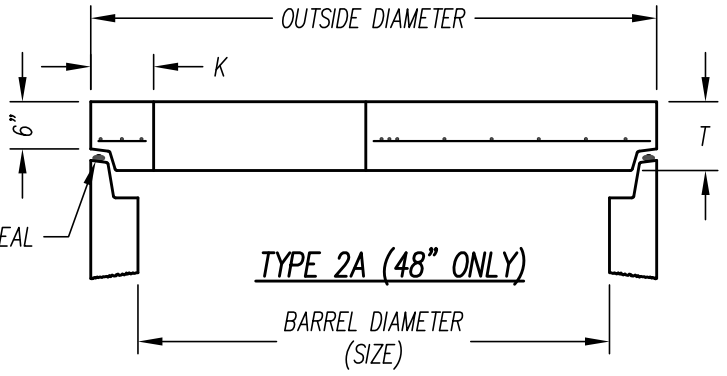

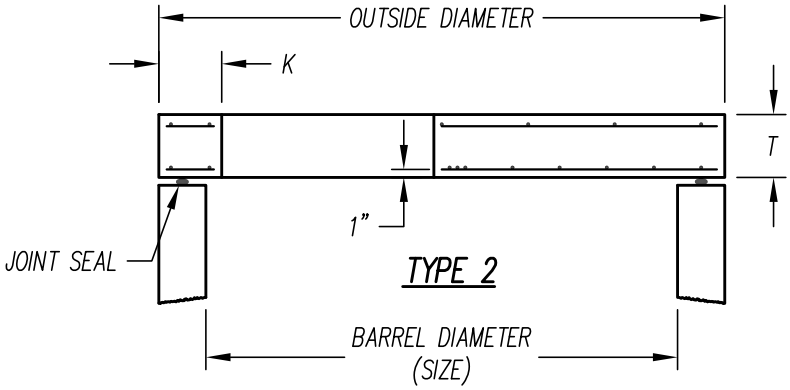

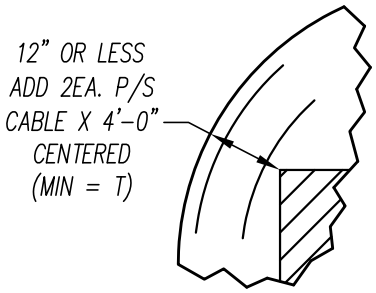

DETAIL FOR COVERS WITH RECTANGULAR OPENINGS

TYPE 2A (48" ONLY)

SIZE	DIMENSIONS OD x T	WEIGHT	K	BOTTOM BARS	TOP BARS
in	in	lbs	in	in	in
48	58 X 8	1,450	6	#4 @ 6	– –

TYPE 2

SIZE	DIMENSIONS OD x T	WEIGHT	K	BOTTOM BARS	TOP BARS
in	in	lbs	in	in	in
36	44 X 6	520	6	#4 @ 6	– –
42	51 X 6	800	6	#4 @ 6	– –
48	58 X 6	1,110	6	#4 @ 6	– –
60	72 X 8	2,470	7	#4 @ 6	#4 @ 11
72	86 X 8	3,680	8	#4 @ 6	#4 @ 11
84	100 X 8	5,100	9	#5 @ 6	#5 @ 6
90	107 X 8	6,250	9	#5 @ 6	#5 @ 6
96	114 X 8	6,730	9	#5 @ 4	#5 @ 6
120	142 X 12	16,500	12	#5 @ 4	#5 @ 6

1. Slabs are manufactured per ASTM C478.
* 2. Various sizes of round or rectangular openings are available. Cover designed for HS20 Load regardless of opening size.
3. Various sizes of round or rectangular castings can be embedded.
4. Special sizes are available upon request.

PROPRIETARY AND CONFIDENTIAL
THE INFORMATION CONTAINED IN THIS DRAWING IS THE SOLE PROPERTY OF CRETEX CONCRETE PRODUCTS, INC. ANY REPRODUCTION, IN PART OR AS A WHOLE, WITHOUT THE WRITTEN PERMISSION OF CRETEX CONCRETE PRODUCTS, INC. IS PROHIBITED

Cretex Concrete Products

OFFICES IN:
BISMARCK HELENA RAPID CITY

SCALE NONE	TITLE STANDARD TYPE 2 & 48" TYPE 2A COVER SLABS (PER MDT 604-02)
DATE 10-25-04	
DR'N BY RTF	
REV DATE 6/4/12 TDE	DWG NAME MT1310-10

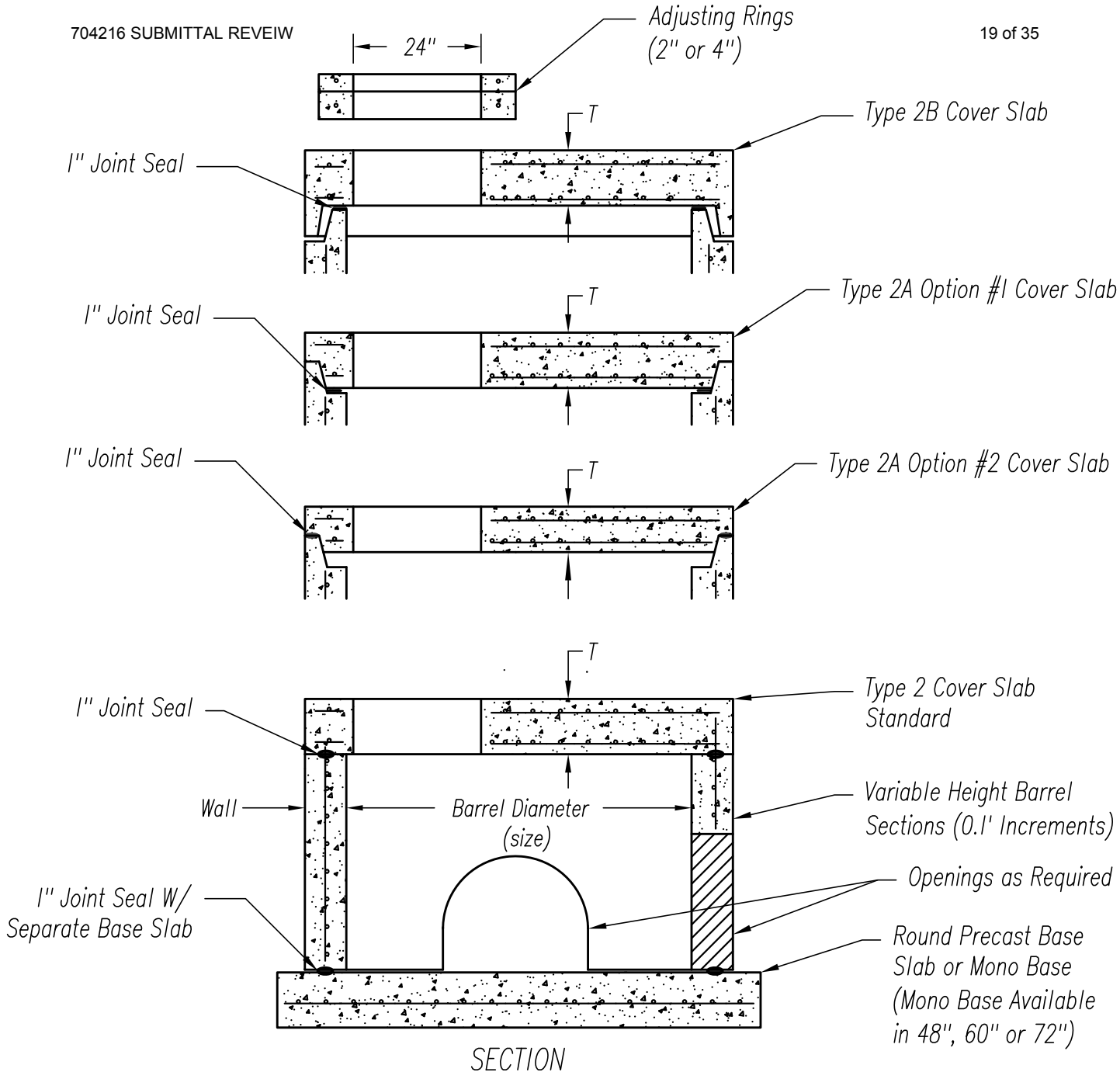

SECTION

SIZE	WEIGHT	WALL	BASE SLAB
in	lbs pvf	in	in
36	540	4	50 x 6
48	880	5	64 x 6
60	1320	6	78 x 6
72	1840	7	92 x 8
84	2450	8	106 x 8
96	3160	9	120 x 10
108	3950	10	130x 10
120	4800	11	148x 12

T= Cover Slab Thickness
Per Drawing # 1310-10, 1310-11, & 1310-20

1. All components are manufactured per ASTM C478.
2. Structure can be furnished with or without standard plastic coated steel steps that meet ASTM C 478.

Cretex Concrete Products West, Inc.

HELENA, MONTANA

OFFICES IN: RAPID CITY BISMARCK HELENA

SCALE	none
DATE	10-25-04
DR'N.	RTF
TITLE	STANDARD STRAIGHT MANHOLE
REVISION DATE	7/16/08 MCM
DRAWING NUMBER	MTI350-40

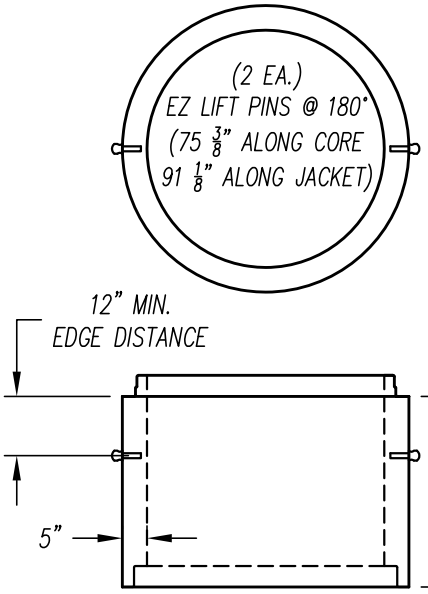

48" MANHOLE

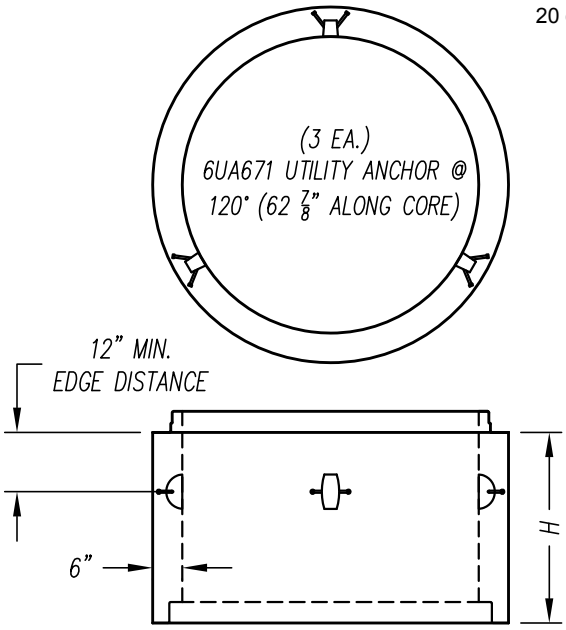

60" MANHOLE

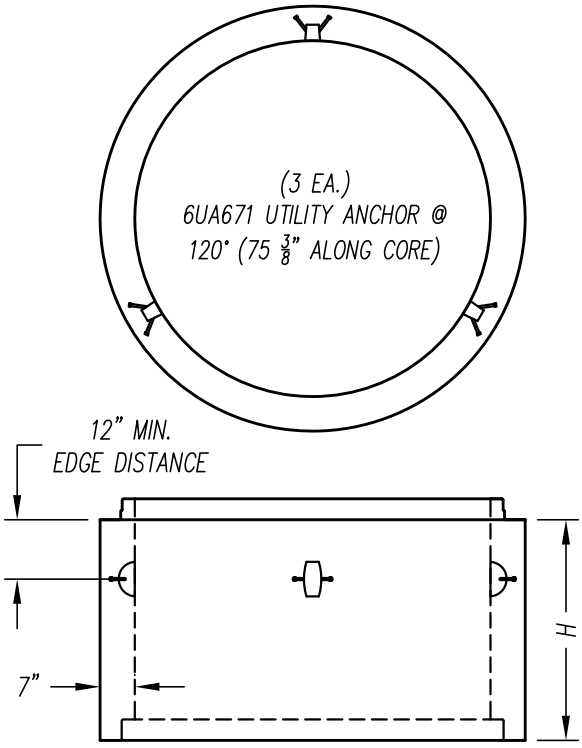

72" MANHOLE

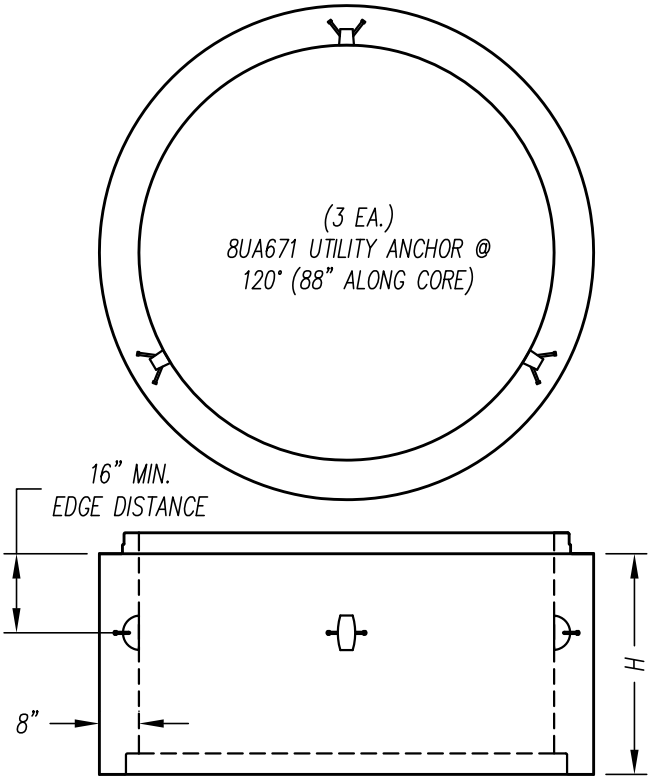

84" MANHOLE

NOTES:

1. LIFTING DEVICES MAY BE ADJUSTED TO AVOID HOLES, BUT MIN. EDGE DISTANCE MUST BE MAINTAINED FOR BBL'S OVER 32" HIGH.
2. BBL'S LESS THAN 32" HIGH SHALL BE LOCATED AT 1/2 THE BBL HEIGHT.
2. LIFTING DEVICES SHOWN FOR "STANDARD" MANHOLE BARRELS & MONOBASES, CONTACT ENGINEERING FOR SPECIAL CONDITIONS.
3. JOINTS SHOWN ARE FOR REFERENCE ONLY, SEE INDIVIDUAL STRUCTURE DETAILS FOR ACTUAL JOINT TYPE & DIRECTION.
4. ANY MANHOLE SIZE ABOVE 84"ø REQUIRES SPECIAL DESIGN FOR LIFTING.

PROPRIETARY AND CONFIDENTIAL
THE INFORMATION CONTAINED IN THIS DRAWING IS THE SOLE PROPERTY OF CRETEX CONCRETE PRODUCTS, INC. ANY REPRODUCTION, IN PART OR AS A WHOLE, WITHOUT THE WRITTEN PERMISSION OF CRETEX CONCRETE PRODUCTS, INC. IS PROHIBITED

THESE QUANTITIES, LOCATIONS AND SIZES OF LIFTING DEVICES DO NOT APPLY WHEN SPECIFIC CAD DRAWINGS OF MANHOLE STUCTURES ARE PROVIDED

Cretex Concrete Products

OFFICES IN: BISMARCK HELENA RAPID CITY

SCALE	NONE
DATE	1/8/13
DR'N BY	TDE
REV DATE	–
TITLE	48", 60", 72", 84" STANDARD MANHOLE LIFTING DEVICE REQUIREMENTS (EZ-LIFT PINS & UTILITY ANCHORS)
DWG NAME	STDMHLIFTINGDEVICES

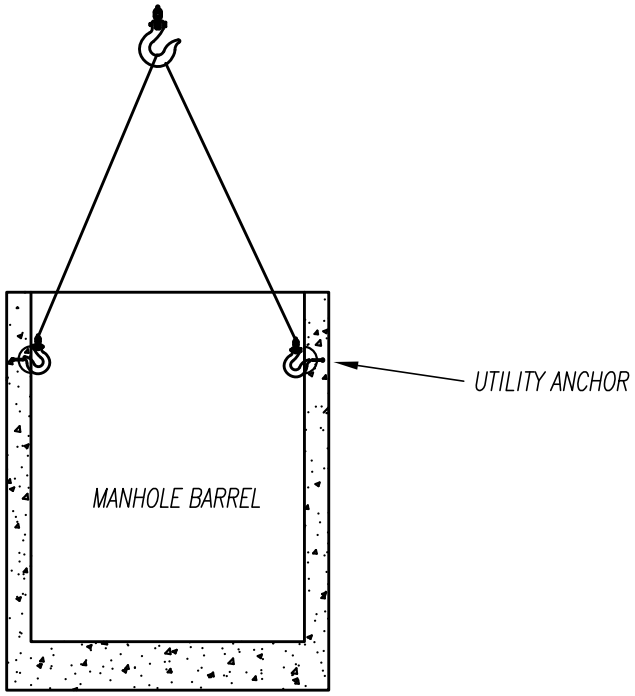

USE SPREADER BAR LONG ENOUGH TO
ALLOW FOR A VERTICAL PICK

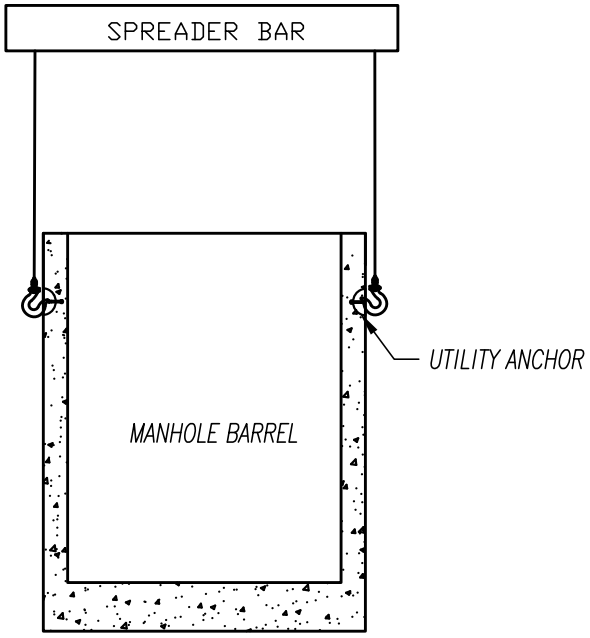

NOTE: UTILITY ANCHOR INFORMATION
PROVIDED SEPARATELY

Cretex Concrete Products West, Inc.

OFFICES IN:
BISMARCK HELENA RAPID CITY

SCALE NONE	TITLE: MANHOLE INSTALLATION with UTILITY ANCHORS
DATE	
DR'N BY MCM	
RS# ------	CUSTOMER
REV DATE	DWG NAME: MANHOLE INSTALLATION

Utility Anchor System

The Dayton Superior Utility Anchor System is designed to economically simplify the lifting and handling of precast concrete elements. Its economics, ease of use and versatility will be a welcome addition to your precast operations.

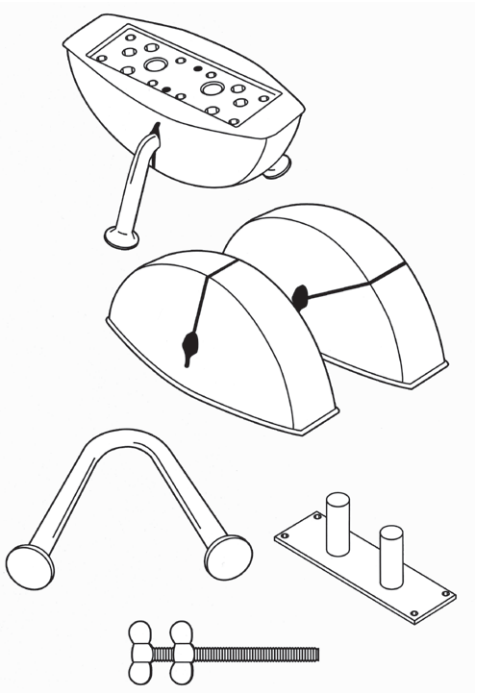

Key Advantages

- High strength – up to 24,000 lbs. SWL
- No special lifting hardware required
- Uses a standard hook or clevis
- Easy to install and use
- Utilizes reusable 90° and 45° polyurethane recess plugs
- Eliminates "through holes" in the precast element
- An economical and versatile system – applicable to any precast concrete element

Added Benefit

Utility contractors can use the utility anchor effectively as a pulling iron. When used as a pulling iron, the safe working loads may be increased by 33%, based on the use of a 3 to 1 factor of safety.

The design of the Dayton Superior Utility Anchor Utility System assures the precaster of an economical, user-friendly system for lifting and handling precast concrete elements.

Utilize the Utility Anchor System to:

- Remove precast elements from their forms
- Handle in the precast yard
- Load for shipment
- Unload and place at the job site

The precaster is able to do it all without the need for any special lifting equipment or hardware. Simply use a standard hook or shackle to connect slings to the utility anchor for a safe lift.

The Utility Anchor System uses a polyurethane recess plug to create a void in the concrete. The concrete void created for the P75H utility anchor is sufficiently large to accept the following:

1. 6-ton Grade 8 alloy hook or
2. 7-ton forged alloy shackle

For the P75S Utility Anchors:

3. 15-ton cast/alloy hook or
4. 15-ton forged alloy shackle

DO NOT use larger hooks or shackles; they will apply additional and unintended loads to the utility anchor and could cause a premature failure of the concrete or anchor.

Anchor Placement

Placement of the Utility Anchor is dependent on the structural shape of the precast element. Utility anchors are not designed for thin edge installation. Always maintain minimum edge distances. For special conditions, contact the nearest Dayton Superior Technical Service Department for assistance.

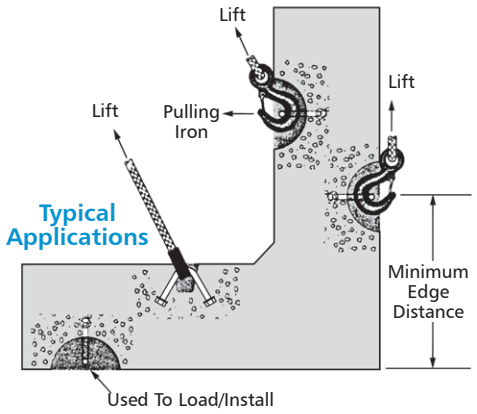

P75 and P75H Utility Anchor®

The Dayton Superior Utility Anchors are available in three diameters and a series of lengths for specific concrete thickness. The utility anchor can be set in either a 90° or a 45° anchor orientation using the appropriate setting plug.

P75 and P75H Utility Anchor						
Anchor	Type	Product Code No.	A	B	C	End Shape
P75	4UA444	121877	5-1/4"	3-1/8"	0.444"	Swift Lift
	5UA444	123442	6"	3-3/4"	0.444"	Swift Lift
	6UA444	121888	7-3/8"	4-3/4"	0.444"	Swift Lift
	5UA671	123441	6-7/16"	3-3/4"	0.671"	Swift Lift
	6UA671	121889	7-3/8"	4-3/4"	0.671"	Swift Lift
	8UA671	121891	9-3/4"	6-3/4"	0.671"	Swift Lift
P75H	12UA875	124738	15-7/8"	11"	0.875"	Swift Lift

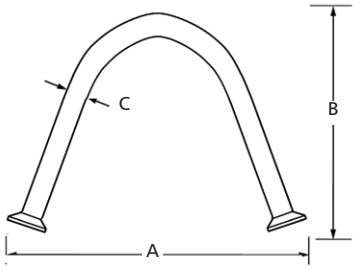

P75 Utility Anchor

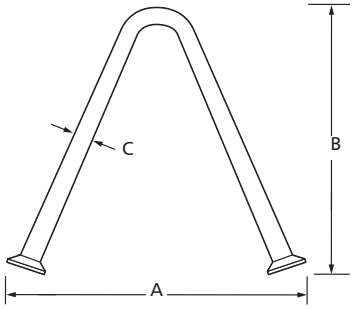

P75-H Utility Anchor

Anchor	Type	Product Code No.	Minimum Panel Thickness	Safe Working Load Tension 90	Safe Working Load Shear 90	Safe Working Load Tension/ Shear 45	Minimum Edge Distance
P75	4UA444	121877	4"	3,200	5,800	2,260	9"
	5US444	123442	5"	3,860	7,710	2,730	10"
	6UA444	121888	5 5/8"	4,460	9,460	3,150	12"
	5UA671	123441	5"	4,560	8,430	3,220	10"
	6UA671	121880	5 5/8"	7,320	15,780	5,170	12"
	8UA671	121801	7 5/8"	10,830	18,850	7,660	16"
P75H	12UA875	124738	12"	24,000	24,000	24,000	30"

Note:

1. Compressive strength of normal weight concrete to be 4,000 psi at time of initial lift.
2. Safe working loads provide an approximate factor of safety of 4 to 1.
3. Utility anchors to be installed at 90° to surface of the concrete.
4. Shear safe working loads are based on loading in the direction of the top of the precast concrete element.

To Order:

Specify: (1) quantity, (2) name, (3) product code.

Example:

200, P75 Utility Anchors, 5UA444.

P75C Utility Anchor® with Clip

The Dayton Superior Utility Anchor with Clip is designed to allow the Utility Anchor to be secured to the wire mesh cage. This product utilizes the P75 Utility Anchors with 2 wire clips welded to opposite legs of the anchor. These wire clips are positioned to hold the utility anchor with Void to the wire mesh in the proper position in the wall for lifting your precast product. Both the 5UA and 6UA anchors in 0.444 and 0.671 diameters for 9" wire spacing are in stock. Other anchor and wire spacing are readily available.

To Order:

Specify: (1) quantity, (2) name, (3) product code (4) anchor size, (5) wire spacing (6) wall thickness.

Example:

200, P75C, #121443, 5UA444anchor, 9" wire spacing, 5" wall.

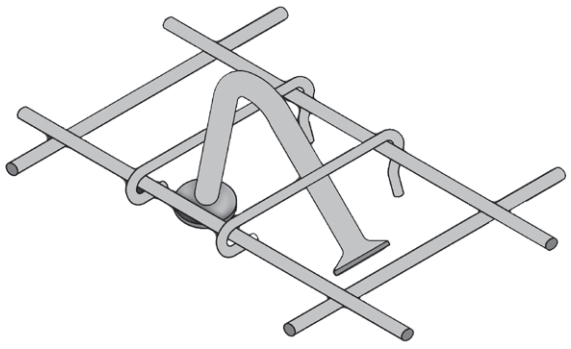

Product Code	Utility Anchor	Wire Clip Lengths	Wall Thickness
123443	5UA444	9"	5"
121890	5UA671	9"	5"
121892	6UA444	9"	6"
121893	6UA671	9"	6"
127446	8UA671	9"	8"

P76 Utility Anchor® Setting Plugs

Utility Anchor Setting Plugs a polyurethane plastic in 90° and 45° orientation.

The reusable setting plug properly sets the anchor approximately 1/2" below the surface of the concrete and provides an adequate recess for easy sling attachment. After final positioning of the concrete element, the recess formed by the recess member can be easily grouted or conveniently covered by the Utility Anchor Cover/Patch.

The 90P875 Setting Plug used with the P75-H 24,000 lb. anchor requires 2 each P101 holding rods to attach setting plug to the form. No holding plate or magnetic plate are available for this setting plug.

NOT USED

NOT USED

P76 Utility Anchor Setting Plug					
Type	Product Code No.	Length	Width	Depth	Color
90P444	123175	8.00"	3.25"	3"	Blue
~~45P444~~	~~123176~~	~~8.00"~~	~~3.25"~~	~~3"~~	~~Blue~~
90P671	123177	8.00"	3.25"	3"	Orange
90P671	127786	9.00"	4.58"	3.35"	Orange
~~45P671~~	~~123178~~	~~8.00"~~	~~3.25"~~	~~3"~~	~~Orange~~
90P875	124685	15.00"	6.13"	5"	Blue

45° NOT USED

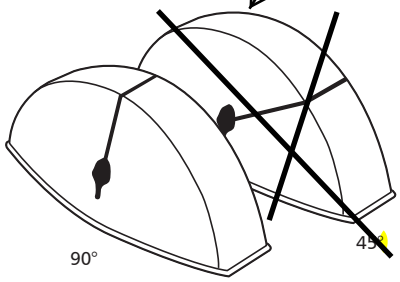

P76 Utility Anchor Setting Plugs

To Order:
Specify: (1) quantity, (2) name, (3) product code.

Example:
200, P76 Utility Anchor Setting Plugs, 90P444.

BLUE PLUG USED FOR UA444
ORANGE PLUG USED FOR UA671
LARGE BLUE PLUG USED FOR UA875

P76D Disposable Setting Plugs

The Disposable Setting Plug is manufactured to offer the precaster an inexpensive alternate to urethane setting plugs. This 2 piece high density polyethylene plastic setting plug is used with the 0.671 Dayton Superior Utility Anchors. The two piece design snaps tightly together around the legs of the anchor eliminating concrete entering the void. The setting plug is installed to the formwork using nail holes on each end of the plug. This plug can also be used with the P77 Double Tee Anchors.

To Order:
Specify: (1) quantity, (2) name, (3) product code.

Example:
200, P76D, #126214.

P76D Disposable Utility Anchor Setting Plugs 0.671

P76C Utility Anchor Cover/Patch

The P76C Utility Anchor Cover/Patch installs over the back of the setting plug to protect the unit without the use of duct tape. The cover/patch can be installed on the setting plug/anchor assembly prior to setting the assembly in the form. This protects the assembly from concrete leakage through the concrete placement sequence. It can also be used later as a temporary or permanent cover for the recess. The P76C cover is gray in color and will blend with most concrete. It can be painted to match other color schemes.

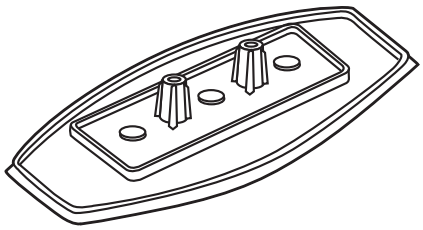

P76C Utility Anchor Cover/Patch

USE SPREADER BAR LONG ENOUGH TO ALLOW FOR A VERTICAL PICK IF POSSIBLE

SPREADER BEAM, CABLES, AND LIFT HOOKS BY CONTRACTOR

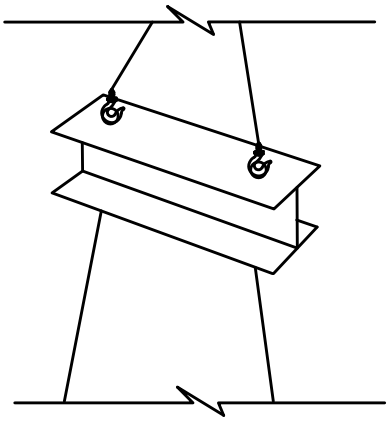

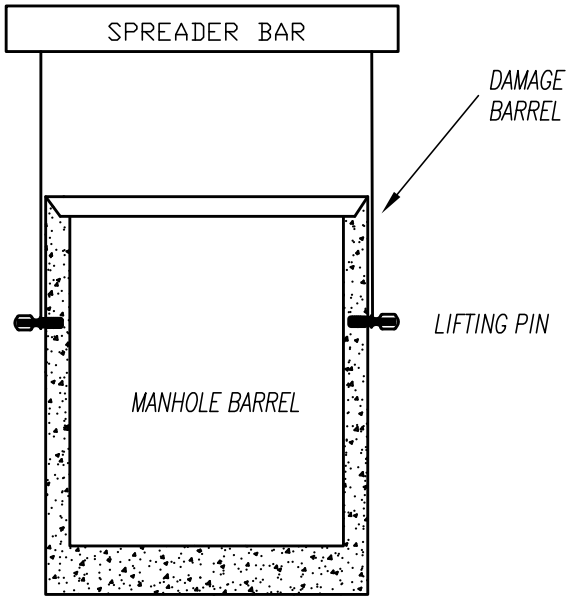

PROPER LIFTING METHOD
RECOMMENDED BY CRETEX WEST

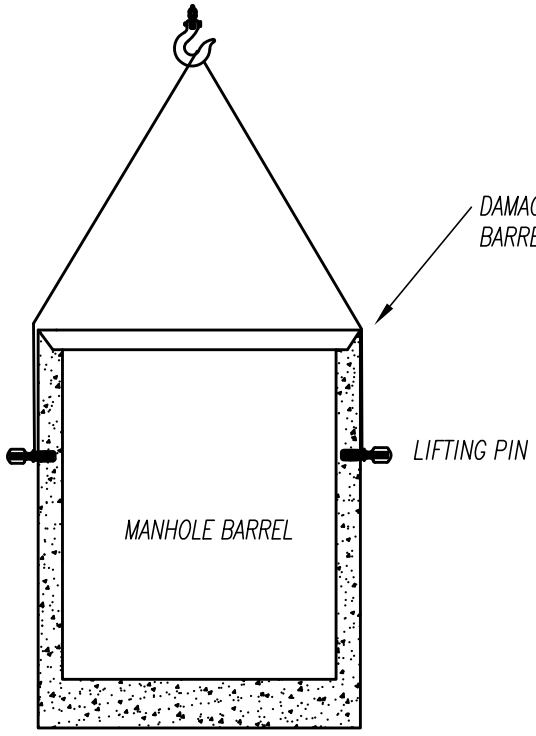

IMPROPER LIFTING METHOD
NOT RECOMMENDED BY CRETEX WEST

NOTE: EZ–Lift pins are rated for a Safe Working Load of 7500 lbs/pin with a 4:1 Factor of Safety.

Cretex Concrete Products West, Inc.

OFFICES IN: BISMARCK HELENA RAPID CITY

SCALE: NONE	TITLE: MANHOLE INSTALLATION with EZ–LIFT PINS
DATE:	
DR'N BY: MCM	
RS#: ------	CUSTOMER:
REV DATE:	DWG NAME: MANHOLE INSTALLATION

LANE INTERNATIONAL TECH SHEET

EZ LIFT PINS

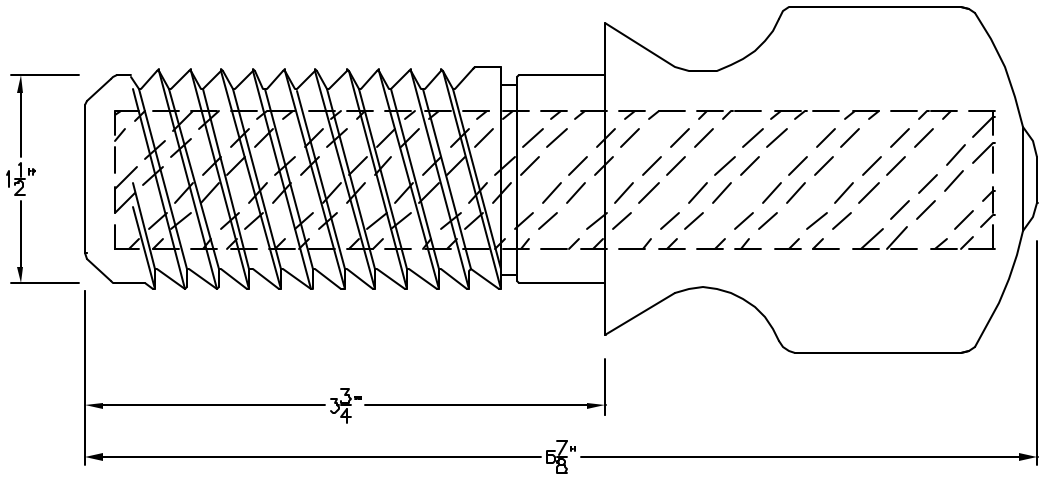

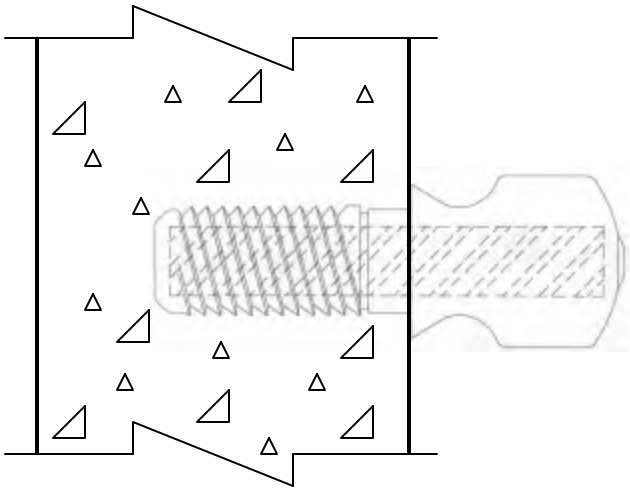

Pin Composition:
Each pin is injection molded polypropylene around a 1" diameter ASTM A-615 Grade 60 reinforcing bar. The polypropylene material conforms to ASTM D-4101 specifications.

Load Capacity:
The *working load* limit is 7,500 lbs. per pin*

* Ultimate load is four times the working load.

P.O. BOX 925 · TUALATIN, OR 97062 · 800-666-0076 · FAX: 503-692-9863 · LANEINTERNATIONAL.COM

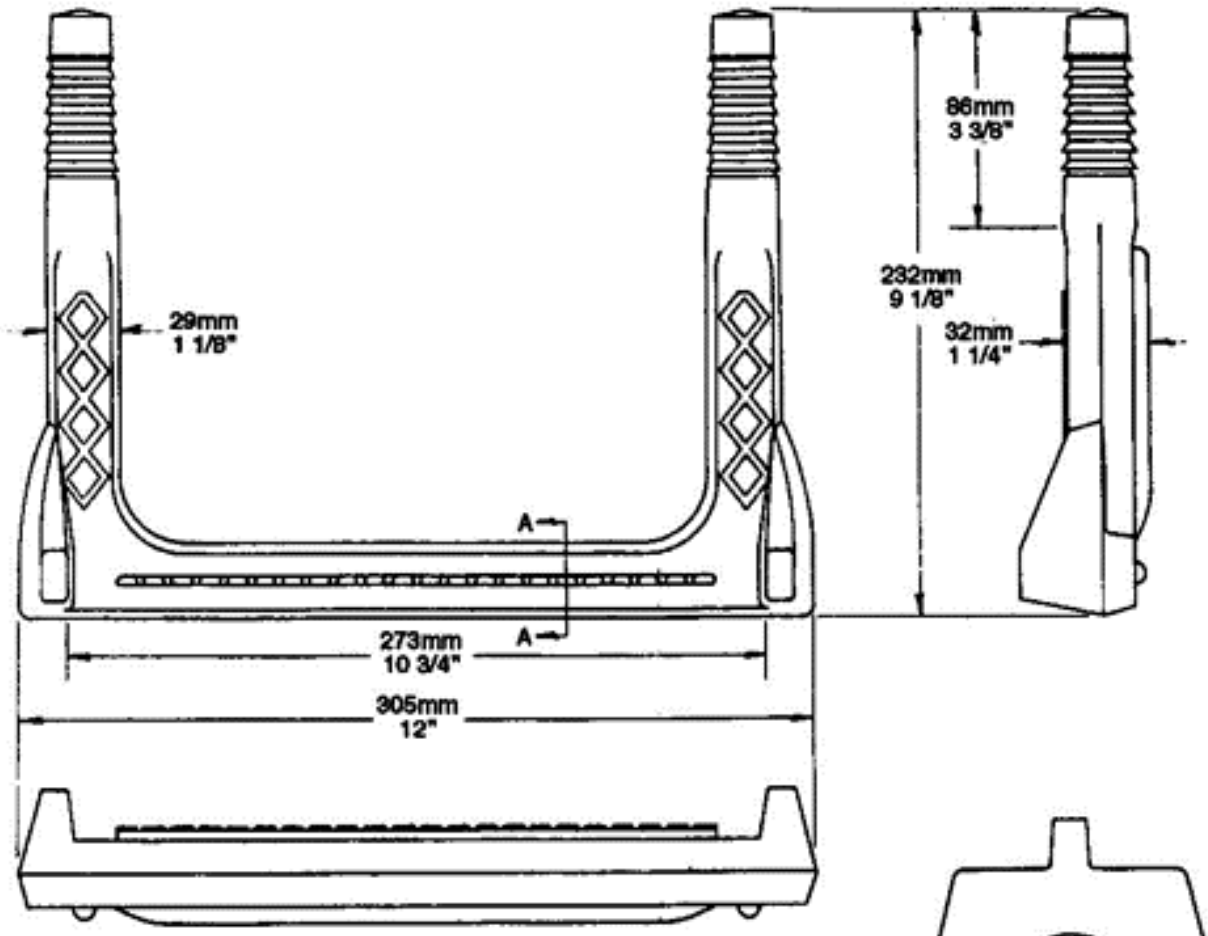

Copolymer Polypropylene Plastic

13mm 1/2" **GRADE 60 STEEL REINFORCEMENT**

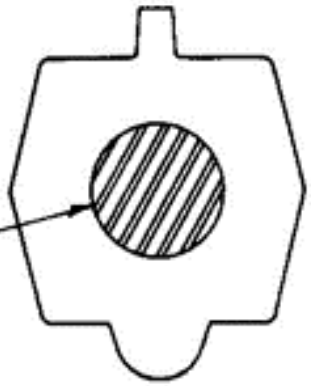

SECTION-A

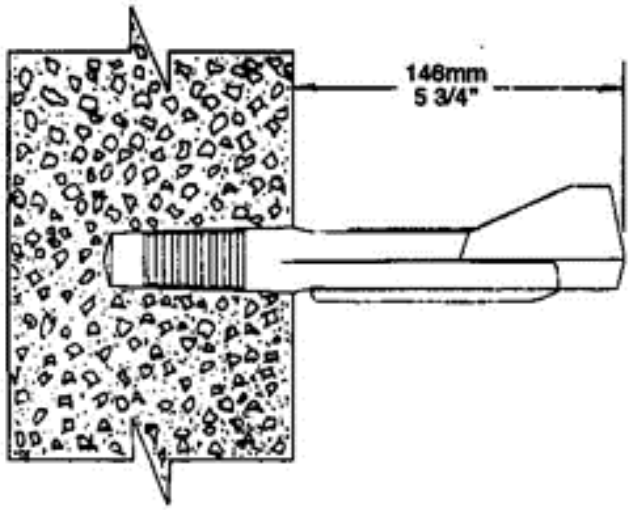

MEETS: ASTM-C-478
ASTM-D-4101
ASTM-A-615
AASHTO-M-199

M.A. INDUSTRIES, INC.

P.O. Box 2322, 303 Dividend Dr. • Peachtree City, GA 30269 • Phone: (770) 487-7761 • Molding Sales Fax: (770) 487-1482 • Corporate Fax: (770) 631-4679

RFS™ Reduced Friction Seal

PRELUBRICATED GASKETS for PIPE and PRECAST PRODUCTS

What It Is

RFS Prelubricated Pipe Gasket is the latest development in pipe joint sealing technology. Using a precision extrusion, the gasket is spliced, tested and filled with an internal lubricant that doesn't solidify or need to be replaced. The **RFS** design allows concrete pipe joints to be assembled quickly and easily.

How It Works

RFS Prelubricated Pipe Gasket has superior materials and technology

- Specially developed synthetic rubber is continuously tested and lab-certified
- RFS is easy to apply to the spigot of the pipe and requires no equalization
- RFS is self-centering and has low installation force
- The mantle of the RFS Gasket fits between the concrete, cushioning the joint
- Special viscosity silicone lubricant to reduce joint homing forces

Why It's Better

- Installs easily and neatly on the pipe spigot
- Requires no external lubrication or equalization
- Installs faster and easier, so less time in the ditch
- Has no external lubricant, so pipe joint stays cleaner during handling and assembly

How It Performs

RFS Prelubricated Pipe Gaskets *meet or exceed all requirements of the following Specifications and/or Test Methods:*

ASTM C 1619 (Classes C and E) - *Standard Specification for Elastomeric Seals for Joining Concrete Structures*

ASTM C 443 - *Standard Specification for Joints for Concrete Pipe and Manholes, Using Rubber Gaskets*

Press-Seal believes all information is accurate as of its publication date. Information, specifications, and prices are all subject to change without notice. Press-Seal is not responsible for any inadvertent errors. Copyright 2010.

PRESS-SEAL GASKET CORPORATION
Protecting Our Planet's Clean Water Supply
Press-Seal Gasket is an ISO 9001:2008 and ISO 14001:2004 Registered Company
800-348-7325 Fax (260) 436-1908
email: sales @press-seal.com
web: www.press-seal.com
Made in USA

RFS tm Reduced Friction Seal

PRELUBRICATED GASKETS for PIPE and PRECAST PRODUCTS

TYPICAL DIMENSIONAL MEASUREMENTS

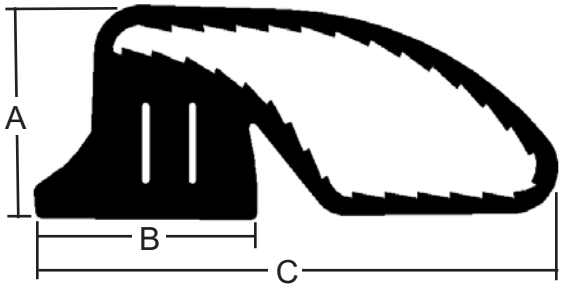

Profile Designation	Body Height "A"	Body Width "B"	Total Width "C"	Annular Space	
				Gasket	Pipe
RFS-135	0.633 (16.1 mm)	0.755 (19.2 mm)	1.756 (44.6 mm)	0.326 (8.3 mm)	0.126 (3.2 mm)
RFS-165	0.680 (17.3 mm)	0.825 (21.0 mm)	1.832 (46.5 mm)	0.446 (11.3 mm)	0.146 (3.7 mm)
RFS-185	0.780 (19.8 mm)	0.930 (23.6 mm)	2.000 (50.8 mm)	0.446 (11.3 mm)	0.146 (3.7 mm)
RFS-200	0.846 (21.5 mm)	1.012 (25.7 mm)	2.245 (57.0 mm)	0.500 (12.7 mm)	0.146 (3.7 mm)

NOTE: DIMENSIONS AREFOR NOMINAL MATERIAL. ACTUAL MEASUREMENTS WILL VARY WITH MANUFACTURING TOLERANCES.

TYPICAL PHYSICAL PROPERTIES

TYPICAL TEST RESULTS for RFS Gaskets - ASTM C 1619 Class E *(ASTM C 1619 Class C and ASTM C 443)*			
Test	ASTM Test Method	Test Requirements	Typical Result
TENSILE STRENGTH	D 412	1800 PSI MIN. *(1200 PSI MIN.)*	2050 PSI
ELONGATION AT BREAK	D 412	425% MIN. *(350% MIN.)*	650%
SPECIFIED HARDNESS	D 2240 (SHORE A DUROMETER)	±5 FROM THE MANUFACTURER'S SPECIFIED HARDNESS	<2
OVEN-AGE TENSILE REDUCTION	D 573, 70± 1ºC FOR 96 HOURS	DECREASE OF 15% MAX. OF ORIGINAL	+2%CHANGE
OVEN-AGE ELONGATION REDUCTION	D 573, 70± 1ºC FOR 96 HOURS	DECREASE OF 20% MAX. OF ORIGINAL	-2% CHANGE
COMPRESSION SET	D 395, METHOD B, AT 70ºC FOR 22 HRS	DECREASE OF 20% *(25%)* MAX. OF ORIGINAL DEFLECTION	14%
WATER ABSORPTION	D 471, IMMERSE 1-INCH SPECIMEN IN DISTILLED WATER AT 70ºC FOR 48 hrs	INCREASE OF 5% *(10%)* MAX. OF ORIGINAL BY WEIGHT	2.70%
OZONE RESISTANCE	D 1149, 50 PPHM	NO CRACKS	PASS
SPLICE STRENGTH	D 2527, Class 3	CLASS 3: 100% ELONGATION OF SPLICE	PASS

Press-Seal believes all information is accurate as of its publication date. Information, specifications, and prices are all subject to change without notice. Press-Seal is not responsible for any inadvertent errors. Copyright 2010.

PRESS-SEAL GASKET CORPORATION
Protecting Our Planet's Clean Water Supply
Press-Seal Gasket is an ISO 9001:2008 and ISO 14001:2004 Registered Company
800-348-7325 Fax (260) 436-1908
email: sales @press-seal.com
web: www.press-seal.com
Made in USA

RFS tm **Reduced Friction Seal**

PRELUBRICATED GASKETS for PIPE and PRECAST PRODUCTS

PIPE ASSEMBLY AS EASY AS 1...2...3

Step 1

Stretch RFS Gasket onto spigot of pipe, making sure that mantle is laying smoothly toward end and that gasket body is firmly against shoulder of spigot.

No Lubricant Needed

The RFS Prelubricated Gasket has all the lubricant it needs inside the sealed mantle. Joints slide together quickly and easily.

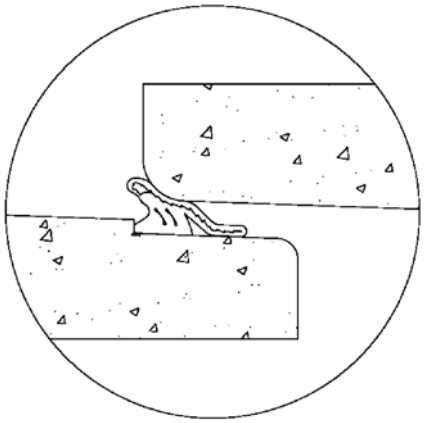

Step 2

Center pipe spigot and bell, and evenly and smoothly press spigot into bell. Gasket mantle will help center the pipe joint as the mantle moves into clearance

Self-Centering Design

The RFS Prelubricated Gasket requires no equalization. It automatically adjusts during application and then helps center the joint during assembly.

Step 3

Complete assembly until pipe joint is home. Mantle moves into recess behind gasket, cushioning the joint while allowing joint to deflect. Complete installation by following pipe manufacturer's recommended bedding and backfilling practices.

Press-Seal believes all information is accurate as of its publication date. Information, specifications, and prices are all subject to change without notice. Press-Seal is not responsible for any inadvertent errors. Copyright 2010.

PRESS-SEAL GASKET CORPORATION
Protecting Our Planet's Clean Water Supply
Press-Seal Gasket is an ISO 9001:2008 and ISO 14001:2004 Registered Company
800-348-7325 Fax (260) 436-1908
email: sales @press-seal.com
web: www.press-seal.com
Made in USA

PSX:DIRECT DRIVE

HIGH-PERFORMANCE PIPE-TO-MANHOLE CONNECTOR

What It Is

PSX: Direct Drive is a high-performance flexible pipe- to-manhole connector that offers easy installation and long-term performance in one convenient product. Whether you core or cast your holes, **PSX:Direct Drive** fits right into your production methods, ready to seal your toughest applications every time.

How It Works

PSX:Direct Drive has superior materials and technology

- Specially developed synthetic rubber is continuously tested and lab-certified
- Power Sleeve made from tempered Series 304 stainless steel
- Installation Mechanism made from Series 300 stainless steel
- Installation Mechanism is infinitely adjustable
- Installation tools are calibrated and certified
- Take-up clamps made from Series 304 stainless steel with quick-adjusting screws

Why It's Better

- Installs quickly and easily from outside the manhole
- Requires no retightening or adjustment
- All stainless-steel components
- No plastic parts to crack or break
- Accurately compensates for hole size variation
- Available for pipes from 1.7"- 44" OD
- Additional torque and multiple adjusters on larger diameters
- Use in manholes, wet wells, pump and lift stations, stormwater structures, on-site treatment structures, grease interceptors, or any application requiring a flexible watertight connector

How It Performs

PSX:Direct Drive *meets or exceeds all requirements of the following Specifications and/or Test Methods:*

ASTM C 923
ASTM C 1244
ASTM C 1478
ASTM F 2510

Protected by one or more of the following patents: 6805359, 7146689, 7263746

Press-Seal believes all information is accurate as of its publication date. Information, specifications, and prices are all subject to change without notice. Press-Seal is not responsible for any inadvertent errors. Copyright 2007

PRESS-SEAL GASKET CORPORATION

Providing Products and Services That Protect Our Planet's Clean Water Supply

800-348-7325 Fax (260) 436-1908
email: sales @press-seal.com
web: www.press-seal.com

Made in USA

PSX:DIRECT DRIVE

PRODUCT SPECIFICATION

Submittal Specification

A watertight flexible pipe-to-manhole connector shall be employed in the connection of the sanitary sewer and/or stormwater pipe to precast manholes or other structures.

The connector shall be PSX:DIRECT DRIVE as manufactured by Press-Seal Gasket Corporation, Fort Wayne, Indiana, or approved equal.

The connector assembly shall be the sole element relied on to assure a flexible watertight seal of the pipe to the structure. The connector shall consist of a rubber gasket, an internal expansion sleeve, and one or more external compression take-up clamps. Approved materials for the connector shall be natural or synthetic rubber and Series 300 non-magnetic stainless steel. No plastic components shall be permitted.

The rubber gasket element shall be constructed solely of synthetic or natural rubber, and shall meet/exceed the requirements of ASTM C 923, and shall have a minimum tensile strength of 1600 PSI. Minimum thickness of the cross-section shall be 0.275 inches.

The internal expansion sleeve components shall be made of Series 300 non-magnetic stainless steel and shall utilize no welds in their construction.

Installation shall be performed using a calibrated installation tool available from the connector manufacturer. Installation of the sleeve shall require no retightening after the initial installation.

The external compression take-up clamp(s) shall be constructed of Series 300 non-magnetic stainless steel and shall utilize no welds in its constructions. The clamp(s) shall be installed by torquing the adjusting screw using a torque-setting wrench available from the connector manufacturer.

Selection of the proper size connector for the manhole and pipe requirement, and installation thereof, shall be in strict conformance with the recommendations of the connector manufacturer. Any dead end pipe stubs installed in connectors shall be restrained from movement per ASTM C 923.

The finished connection shall provide sealing to 13 psi (minimum), and shall accommodate deflection of pipe to 7 degrees (minimum) without loss of seal.

Vacuum testing shall be conducted in strict conformance with ASTM C 1244 prior to backfill. Other testing shall be conducted in strict conformance with the requirements of the connector manufacturer.

PRODUCT PERFORMANCE

PSX:Direct Drive meets and/or exceeds all requirements of ASTM C 923, including physical properties of materials and performance testing. Performance testing includes:

- 13 psi minimum in straight alignment
- 10 psi at minimum 7°angle
- 10 psi minimum under shear load of 150 lbs/in. pipe diameter

PSX:Direct Drive meets and/or exceeds the following specifications:

- ASTM C 923 *Standard Specification for Resilient Connectors Between Reinforced Concrete Manhole Structures, Pipes, and Laterals*
- ASTM C 1478 *Standard Specification for Storm Drain Resilient Connectors Between Reinforced Concrete Storm Sewer Structures, Pipes and Laterals*
- ASTM F 2510 *Standard Specification for Resilient Connectors Between Reinforced Concrete Manhole Structures and Corrugated High Density Polyethylene Drainage Pipes*
- ASTM C 1244 *Standard Test Method for Concrete Sewer Manholes by the Negative Air Pressure (Vacuum) Test*

TYPICAL TEST RESULTS for PSX:Direct Drive (as in ASTM C 923 and C 1478)			
Test	ASTM Test Method	Test Requirements	Typical Result
CHEMICAL RESISTANCE; 1N SULFURIC ACID and 1N HYDROCHLORIC ACID	D 534, AT 22ºC FOR 48 HRS	NO WEIGHT LOSS NO WEIGHT LOSS	NO WEIGHT LOSS NO WEIGHT LOSS
TENSILE STRENGTH	D 412	1200 PSI, MIN.	2100 PSI
ELONGATION AT BREAK	D 412	350%, MIN.	525%
HARDNESS	D 2240 (SHORE A DUROMETER)	±5 FROM THE MANUFACTURER'S SPECIFIED HARDNESS	<2
ACCELERATED OVEN-AGING	D 573, 70± 1ºC FOR 7 DAYS	DECREASE OF 15%, MAX. OF ORIGINAL TENSILE STRENGTH, DECREASE OF 20%, MAX. OF ELONGATION	-13% TENSILE CHANGE, -14% ELONGATION CHANGE
COMPRESSION TEST	D 395, METHOD B, AT 70ºC FOR 22 HRS	DECREASE OF 25%, MAX. OF ORIGINAL DEFLECTION	13%
WATER ABSORPTION	D 471 IMMERSE 0.75 BY 2-IN.SPECIMEN IN DISTILLED WATER AT 70ºC FOR 48 hrs	INCREASE OF 10%, MAX. OR ORIGINAL BY WEIGHT	3.50%
OZONE RESISTANCE	D 1171	RATING 0	PASS
LOW-TEMP, BRITTLE POINT	D 746	NO FRACTURE AT -40ºC	PASS
TEAR RESISTANCE	D 624, METHOD B	200 LBF/IN. (MIN.)	450 LBF/IN.

Protected by one or more of the following patents: 6805359, 7146689, 7263746

Press-Seal believes all information is accurate as of its publication date. Information, specifications, and prices are all subject to change without notice. Press-Seal is not responsible for any inadvertent errors. Copyright 2007

PRESS-SEAL GASKET CORPORATION
Providing Products and Services That Protect Our Planet's Clean Water Supply
800-348-7325 Fax (260) 436-1908
email: sales @press-seal.com
web: www.press-seal.com *an ISO 9001:2000 Registered Company*

EZ-STIK

PREMIUM BUTYL JOINT SEALANT

What It Is

EZ-STIK is a premium preformed butyl joint sealant that is supplied in rope form. Containing a higher proportion of butyl rubber, EZ-STIK It is carefully blended from uncured butyl rubber and other solids and will not shrink, crack, or dry out. Although clean to handle, it provides excellent adhesion and cohesion to a wide variety of surfaces - concrete, metal, most concrete coatings, glass, wood, and painted surfaces.

Why It's Better

- Increased proportion of butyl rubber content
- Premium packaging
- Wide variety of sizes and styles
- All-weather performance
- Good adhesion to dry concrete, commonly specified concrete coatings, steel, glass, or painted surfaces
- Coated release paper for easy installation
- Long service life
- Cohesive properties allow for joint movement
- Compatible for use with rubber O-Ring designs
- Low moisture vapor transmission rate (MVTR)
- Special primers available for use on damp, contaminated, or difficult surfaces

How It Performs

EZ-STIK BUTYL JOINT SEALANT *meets or exceeds all requirements of the following Standards, Specifications and/or Test Methods:*

ASTM C 990 - *Standard Specification for Joints for Concrete Pipe, Manholes, and Precast Box Sections Using Preformed Flexible Joint Sealants; Section 6.2 Butyl Rubber Sealants*

EPA Method 524.2 - *Detection Method for Drinking Water Volatile Organic Compounds*

AASHTO M 198 - *Joints for Circular Concrete Sewer and Culvert Pipe Using Flexible Watertight Gaskets*

Typical Applications

- Sanitary Manhole Joints
- Stormwater Manhole Joints
- Irrigation and Drainage Systems
- Box Culverts
- Elliptical/Arch Pipe
- Architectural Foundations
- Underground Utility Vaults
- Stormwater Treatment Structures
- Stormwater Inlet Structures
- On-Site Treatment Tanks
- Grease Interceptors
- Wet Wells

Press-Seal believes all information is accurate as of its publication date. Information, specifications, and prices are all subject to change without notice. Press-Seal is not responsible for any inadvertent errors. Copyright 2008

PRESS-SEAL GASKET CORPORATION
Providing Products and Services That Protect Our Planet's Clean Water Supply
800-348-7325 Fax (260) 436-1908
email: sales @press-seal.com
web: www.press-seal.com
Made in USA

Submittal Specification

The joints and/or joint surfaces of the structures shall be sealed with a butyl-rubber-based preformed flexible sealant conforming to ASTM C-990, paragraph 6.2. The material shall comply with AASHTO M198 for Type B Gaskets, and shall meet the testing requirements of EPA Method 524.2 for Drinking Water Volatile Organic Compounds.

The material shall be EZ-STIK as supplied by PRESS-SEAL GASKET CORPORATION, Fort Wayne, Indiana, or approved equal. The butyl material shall consists of 50% (min.) butyl rubber and shall contain 2% or less volatile matter.

For preformed joint sealants, the sealant shall be sized such that the joint is filled to 50% (min.) of its annular volume when fully assembled, and the sealant shall have the ends kneaded together at the overlap. Primer and/or adhesive as recommended by the sealant supplier shall be employed for adverse, critical, or other applications.

Testing of joints and compliance with construction requirements shall be conducted in strict conformance with the requirements of the sealant supplier.

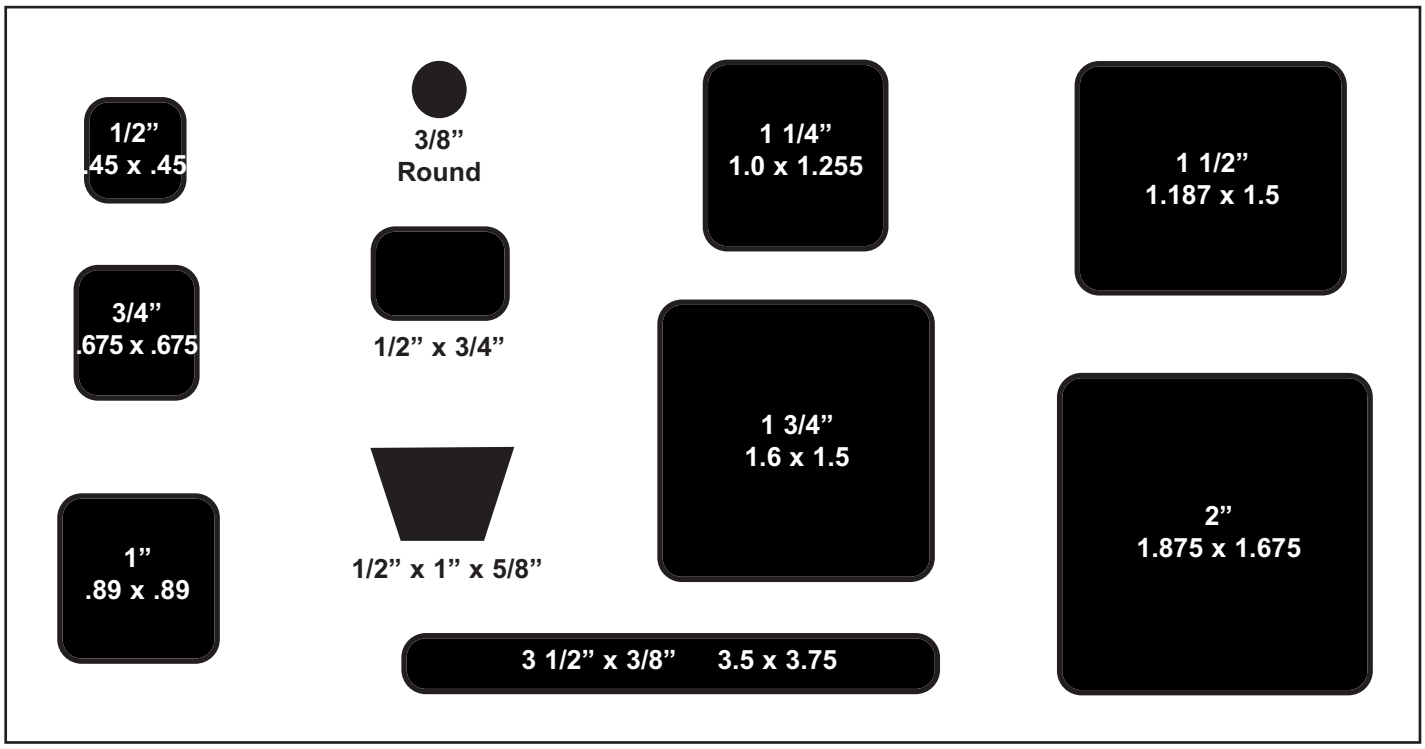

Custom Sizes Available Upon Request

Also Available in Trowelable Bulk and Easy to Pump Bulk

All sizes sold 40 cartons per pallet. All pallets are shrink wrapped for outside storage.
Quantity discounts available - contact our Customer Service Department.

Press-Seal believes all information is accurate as of its publication date. Information, specifications, and prices are all subject to change without notice. Press-Seal is not responsible for any inadvertent errors. Copyright 2008

PRESS-SEAL GASKET CORPORATION
Providing Products and Services That Protect Our Planet's Clean Water Supply
800-348-7325 Fax (260) 436-1908
email: sales @press-seal.com
web: www.press-seal.com
an ISO 9001:2000 Registered Company

EZ-STIK

PHYSICAL PROPERTIES TEST RESULTS

Description

EZ-STIK is a butyl-rubber-based sealant designed to be permanently flexible, tacky and resistant to moisture and deterioration by exposure to dilute chemical solutions. EZ-STIK meets ASTM C-990, Section 6.2 requirements for Butyl Rubber Sealant, EPA Method 524.2 for Drinking Water Volatile Organic Compounds and AASHTO M198 for Type B Gaskets.

Typical Properties

The following values represent typical test results and are manufacturing specifications.

		SPEC.	REQUIRED	EZ-STIK
Butyl Rubber (Hydrocarbon Content %)		ASTM D4	50% min.	62%
Ash Inert Mineral Filler %		AASHTO T111	30% min.	45-48%
Volatile Matter	(AASHTO T47)	ASTM D6	2% max.	0.5-1.0%
Specific Gravity @ 77ºF	(AASHTO T229)	ASTM D71	1.15 - 1.50	1.25 - 1.35
Ductility @ 77ºF, cm	(AASHTO T51)	ASTM D113	5.0 min.	meets requirement
Flash Point C.O.C.		ASTM D92	350º min.	375ºF
Fire Point C.O.C.		ASTM D92	375º min.	385ºF
Compression Test				
@77ºF, lbf/in^3		ASTM C972	100 max.	40 - 55 lb-ft/in^3
@32ºF, lbf.in^3			200 max.	130 - 160 lb-ft/in^3
Low Temperature Flexibility				
@-10ºF		ASTM C765	180º bend, no cracking, nor loss of adhesion.	Pass - no cracking or adhesion loss.
Elevated Temperature Flexibility				
14 days @ 157ºF		ASTM C776	No sag, nor change in extruded shape.	Pass - no sag or shape change.
Adhesion After Impact		ASTM C776-84	No greater loss than 50% of adhesion.	Pass - no loss of adhesion.
Cone Penetration				
@ 77ºF, dmm		ASTM D217	50 - 100 dmm	55 - 85 dmm
@ 32ºF, dmm			40 min.	45 - 55 dmm
Chemical Resistance			No deterioration, no cracking, no swelling.	Pass - no visible change after 30 days immersion in 5% solutions HCl, H_2SO_4,NaOH,KOH,H_2S

Press-Seal believes all information is accurate as of its publication date. Information, specifications, and prices are all subject to change without notice. Press-Seal is not responsible for any inadvertent errors. Copyright 2007

PRESS-SEAL GASKET CORPORATION
Providing Products and Services That Protect Our Planet's Clean Water Supply
800-348-7325 Fax (260) 436-1908
email: sales @press-seal.com
web: www.press-seal.com

Made in USA

Sparling Instruments Co. Inc.

4097 N. Temple City Blvd.
El Monte, CA. 91731-1988

DATE: 8-6-14

TO: Boland Construction
4701 North Star Blvd
Great Falls, MT

PROJECT: Sand Coulee, MT - Water Improvements

SPEC SECTION: 15001 Magnetic Flowmeter

SCH #2 - BID ITEM#208 - Flow Meter Manhole

ONE (1) 3" Sparling Magnetic Flowmeter, Model 656 EP w/
Sensor - 3" 150 lb flanges, Polyurethane Liner, 316 SS Electrodes,
Transmitter - NEMA 4X/NEMA7 Intergal mounted, 77-265 VAC, Flow Rate (GPM), Flow Totalization, 4-20 MA & Scaled Pulse Output,

OPTIONS:

TWO(2) Sets 3" SS Grounding Rings

REPRESENTATIVE: Terrex Industries, Inc.
P.O. Box 6723
Great Falls, MT. 59406
PH: (406) 799-2131
Email: rob@terrexinc.com

Product Data Sheet
PDS-656

TigermagEP
Technical Specifications

FM656 Obstructionless Electromagnetic Flowmeter

DESCRIPTION
The Model 656 is a microprocessor-based electromagnetic flowmeter designed to measure the flow of conductive liquids in full pipes. The sensor and the transmitter are integral and enclosed in a NEMA-7 explosion-proof housing. The sensor housing is made of steel.

A wide variety of liners and electrodes are available to allow you to tailor the meter to your process.

The Model 656's nonvolatile E^2PROM memory and circuitry eliminates the need for a microprocessor backup battery. It is not necessary to reprogram if the electronic module is replaced or exchanged with electronics from another size flowmeter.

APPLICATIONS
The Model 656's high signal frequency makes it ideally suited to applications with high levels of inherent noise including: Process Chemicals, Heavy Sludges, Pulp & Paper Stock, Mining Slurries, Polymers, Acids, Alkalies, Sewage, Cooling Water. Nearly any conductive liquid can be measured.

CERTIFIED ACCURACY
Each **TigermagEP™** is wet-flow calibrated in Sparling's Primary Flow Lab traceable to the National Institute of Standards and Technology. A certificate of accuracy is furnished with each meter.

PRINCIPLE OF OPERATION
The Model 656 magnetic flowmeter is based on Faraday's Law which states that the voltage induced in a conductor moving through a magnetic field is proportional to the velocity of that conductor. The magnetic flowmeter will measure liquids with conductivities greater than 5 micromhos.

STANDARD FEATURES
- Sampling frequency up to 100 Hz for accurate measurement of fluids with high levels of inherent noise
- Forward, reverse and net totalization
- Programmable high and low flow alarms
- Nonvolatile E^2PROM memory
- Universal electronics module compatibility
- 2-line, 16 character backlit display
- Programming made easy with Mag-Command™
- User-selectable damping & low flow cutoff
- NEMA-4X & NEMA-7 explosion proof enclosure
- Approvals include: FM, CSA (std.)
- Rotatable modular display
- Empty pipe detection
- PZR - Positive Zero Return
- Standard 0.5% accuracy
- Sizes available from 0.5" - 72"

FM APPROVED

SPARLING

EASY TO READ BACKLIT ROTATABLE DISPLAY

The 16 character, 2-line backlit transmitter display is rotatable 360° in 90° increments ensuring easy reading in any orientation.

INSTALLATION

The meter must be mounted at a point in the line in which the pipe is always full of the process liquid under flowing conditions.

The meter may be equipped with ANSI 150 or 300 lb., AWWA, DIN, PN10 or 16, JIS 10K or 20K, or British Standard flanges.

Only three diameters of straight pipe length are required from the center of the meter to normal obstructions to obtain specified accuracies. In the smaller sizes all of the necessary straight pipe is contained within the meter itself.

E²PROM NONVOLATILE MEMORY

A backup battery is not required and there is no need to reprogram if the electronics module is replaced or exchanged. Meter identification (tube ID, serial number, K, offset, etc.) is stored on an E²PROM chip independent of transmitter electronics. The E²PROM chip has lifetime data retention.

EMPTY PIPE DETECTION - Standard

The Sparling TigermagEP™ is designed to detect absence or inadequate volume of process fluid in the pipe and will hold the output signal to 4 mA or zero. This feature does not require any hard wiring as it is a software selection. One of the most important values of this feature is that it prevents false totalization possible with other meters under partially filled pipe conditions.

EASE OF COMMUNICATIONS

The TigermagEP™ is programmable with Mag-Command or Hart Protocol. 4-20 mA, RS-232 or RS-485 outputs give you flexibility when interfacing with your distributed control system.

REMOTE MOUNTED TRANSMITTER

Remote mounting of the transmitter is required when pipe vibration is excessive, when flooding is possible or where high temperature conditions exist (over 212°F / 100°C).

The TigermagEP™ remote transmitter is housed in a NEMA-4X enclosure and features a larger sized (8mm) 16 digit 2-line backlit display. All power, coil and electrode connections are made within the transmitter enclosure and junction box. The meter is programmed using Mag-Command. Hall-effect switches which are energized from outside the enclosure. The enclosure can be wall mounted. An optional bracket for pipe mounting is available.

HI-Z CIRCUITRY

The Sparling TigermagEP™ provides superior performance in liquids which tend to deposit nonconductive coatings. Hi-Z™ circuitry produces a high input impedance to the transmitter's preamplifier (10^{12} ohms). The impedance of the coating is negligible as compared to the impedance of the receiving instrument. The voltage drop across the electrode coating is also negligible eliminating the need for electrode cleaners.

TWO FLOW ALARMS

Fault alarms can be configured with alarm set points between 0-99% of flow for each alarm. Open collector output turns on above programmed set point.

PZR – Positive Zero Return

An electronic circuit is activated by an external contact closure when lines go empty or when a pump or valve is shut down, indicating to the meter that it should drive the output signal to 4 mA or zero.

REMOVABLE ELECTRODES *(option)*

Two configurations of removable electrodes are available in sizes 6" or greater for all FM656 meters. The first configuration allows removal of the electrode after the line has been depressurized and drained. Removal is performed with an 11/32" nut driver and a 3/4" socket wrench.

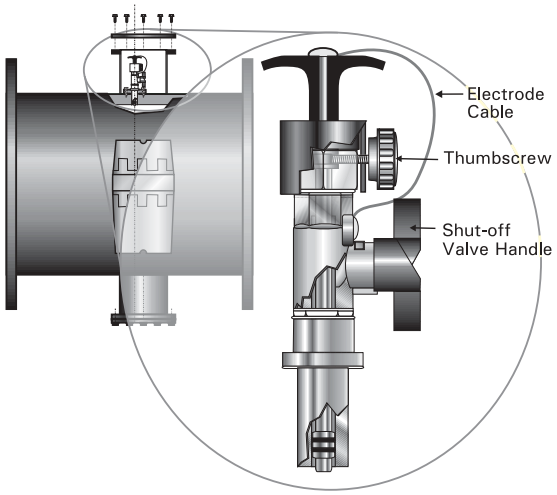

The second is the "hot-tap" electrode which allows electrode replacement while the system is still under pressure without disturbing the process flow. Removal can be easily performed with a phillips screwdriver and a crescent wrench. Special locking catches were designed to prevent high pressure accidents during electrode removal. The shut-off valve must be closed before the electrode may be removed.

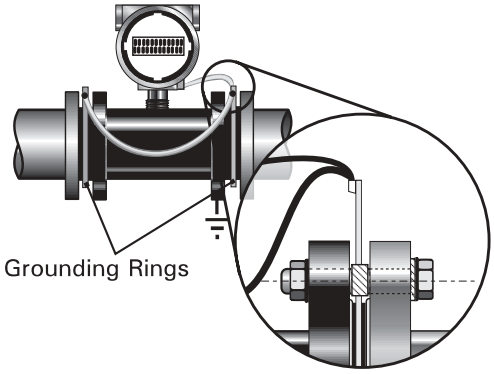

GROUNDING

The use of grounding rings is recommended to ensure accuracy. Grounding rings are required if adjacent piping is lined or nonconductive. Pump noise or excessive RF should be minimized to achieve highest accuracy.

FLOW RATES & DIMENSIONS

Table 1 - Flow & Dimensions

Meter & mating flange size (inches)	Dimensions								Flowrates - GPM - Full Scale		
	A		B		C		D				
	150 lb.	300 lb.	150 lb.	300 lb.	150 lb.	300 lb.	150 lb.	300 lb.	1 fps.	3 fps.	33 fps.
0.5	4.00	4.00	3.50	3.75	9.50	9.62	9.25	9.37	0.6	1.7	18
1	4.00	4.00	4.25	4.88	10.19	10.50	9.94	10.25	2	6	66
1.5	4.00	4.00	5.00	5.12	10.88	11.44	10.63	11.19	5	15	174
2	4.00	4.00	6.00	6.50	11.69	11.89	11.44	11.64	9	27	303
3	6.00	6.00	7.50	8.25	13.00	13.40	12.75	13.15	20	60	664
4	6.00	6.00	9.00	10.00	14.38	14.88	14.13	14.63	35	107	1182
6	13.38	14.88	11.00	12.50	17.00	17.75	16.75	17.50	85	254	2800
8	13.38	15.40	13.50	14.25	19.40	19.78	19.15	19.53	145	436	4800
10	18.15	20.55	16.00	17.50	22.56	23.31	22.31	23.06	236	709	7800
12	19.40	21.78	19.00	20.50	25.00	25.75	24.75	25.50	333	1000	11000
14	21.38	23.75	21.00	23.00	26.67	27.67	26.42	27.42	409	1227	13500
16	23.38	25.88	23.50	25.50	28.97	29.97	28.72	29.72	545	1636	18000
18	27.25	29.88	25.00	28.00	31.14	32.64	30.89	32.39	667	2000	22000
20	27.63	30.40	27.50	30.50	33.39	34.89	33.14	34.64	879	2636	29000
24	32.75	35.75	32.00	36.00	37.44	39.44	37.19	39.19	1273	3818	42000
30	43.50	46.63	38.75	43.00	43.72	45.85	43.47	45.60	1909	5727	63000
36	47.75	50.85	46.00	50.00	50.20	52.20	49.95	51.95	2925	8775	96525
42	51.75	55.12	53.00	57.00	56.90	58.90	56.65	58.65	4040	12120	133320
48	51.75	55.38	59.50	65.00	63.05	65.80	62.80	65.55	5322	15966	175626
54	53.50	*	66.25	*	69.88	*	69.63	*	7144	21433	235800
60	65.50	*	73.00	*	76.75	*	76.50	*	8500	25500	280500
66	65.50	*	80.00	*	83.75	*	83.50	*	10300	31000	341000
72	72.75	*	86.50	*	90.00	*	89.75	*	12700	38100	419100

Dimensions for flanges. Allow 1/8" to 1/4" for lining thickness / Dimensions C & D ±.0125"

HOW TO ORDER A TIGERMAG EP MODEL 656

Base Model Number
FM-656 - TigermagEP

Size
OD = 0.50", OF = 1", OG = 1.5", 02 = 2", 03 = 3", 04 = 4", 06 = 6", 08 = 8", etc.

Table 3 - Liner Material

1	Hard Rubber (6" - 72")	3	Tefzel® (0.5" - 48")	6	Ceramic liner (0.5" - 2")
2	Soft Rubber (6" - 72")	5	Polyurethane (1" - 48")	9	Neoprene (6" - 72")

Table 4 - Electrode Material

1	316SS	4	Titanium	7	Platinum
2	Hastelloy C	5	Tantalum	8	Zirconium
3	316SS Bullet Nosed	6	Fused Platinum	9	Monel

Table 5 - Flange Rating

1	150 lb. flanges	4	PN 10 DIN	6	JIS 10K
3	300 lb. flanges	5	PN 16 DIN	7	JIS 20K

Table 6 - Transmitter and Mounting

0 Integral NEMA-4X/NEMA-7 enclosure
1 Remote NEMA-4X/NEMA-7 enclosure, 15' cable
3 Remote NEMA-4X/NEMA-7 enclosure, 15' cable, accidential submergence proof sensor
5 Remote NEMA-4X enclosure, 15' cable
6 Remote NEMA-4X encl., 15' cable, accidental submergence proof sensor
7 Remote NEMA-4X encl., 15' cable, permanent submergence proof sensor

Table 7 - Power Supply*

0	77-265 VAC Power	1	12-60 VDC Power

Special Notes for Construction

__ Hart® protocol (KP602 programmer available)
__ RS-485 Communications port
__ High temperature coils - required for temperatures over 266 °F
Requires remote mount option from Table 6
Ceramic max temp 420 °F / *Tefzel®* max temp 300 °F @ 100 psi
__ Hot Tap removable electrode design (6" & above only)
__ Removable electrode design (6" - 72")
__ Special cable length (over 15 feet - Max. 100 ft.)
__ Alarm with relay contacts (remote only)

FM656 __ __ __ __ __ __

*FM approval is up to 120 volts

Integral Mount Transmitter

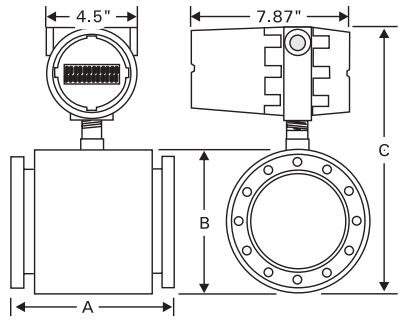

Remote Mount Transmitter

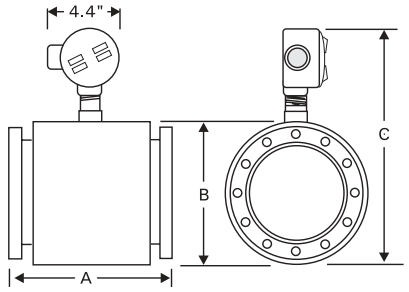

▲ **Sensor**

▼ **Transmitter Enclosure (NEMA-4X)**

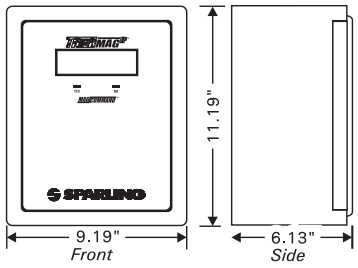

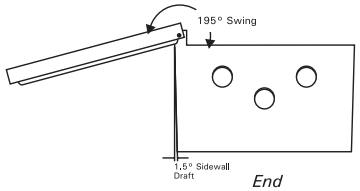

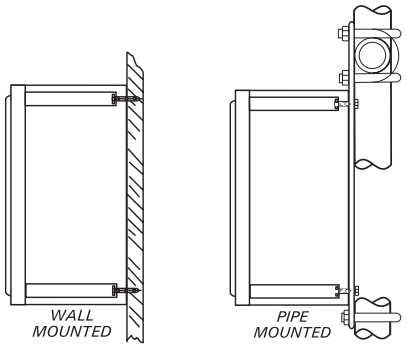

STANDARD SPECIFICATIONS

Accuracy:
(Frequency Output)

1.0"-72"
0.5% of flow rate (1-33 fps)

0.5"
1% of flow rate (1-33 fps)

Temperature Effect: ±0.025 % FS/°C

Full Scale Ranges: From 0-3 to 0-33 ft/sec.

Repeatability: ±0.1% full scale

Electrodes: Stainless steel standard (others available)

Liner: Ceramic (aluminum oxide 99.5%), Hard Rubber, Soft Rubber, Neoprene, Polyurethane or *Tefzel* ®

Outputs: 1) Isolated analog 4-20 mAdc into 800 ohms (std); 2) scaled pulse 24 Vdc with selectable 12.5/25/50/100 ms on time, max. freq. 60 Hz; 3) 0-1000 Hz freq., for 0-100% flow rate. 15 Vdc; 4) two flow alarms; 5) fault, with open collector; 6) RS232 communication; 7) flow direction with open collector; 8) Positive Zero Return (PZR) for external relay contacts. Outputs 2 & 3 can be open collector if required.

Mag-Command™: Selection and change of meter parameters by magnetic probe without opening the enclosure.

Display: 2-Line, 16 Digit alphanumeric backlit display (rate and total) Modular, rotatable 360° in 90° increments.

Conductivity: Minimum 5 micromhos/cm

Minimum Velocity: 0.3 fps (0.1 mps)

Power Requirements: *77 - 265 Vac 50/60 Hz (12-60 Vdc optional)

Power Consumption: Less than 20 Watts

Enclosures: Transmitter: Cast aluminum epoxy coated. Integral (NEMA-7) or remote mounted (NEMA-4X).
Sensor Housing: Fabricated steel, epoxy coated.

Electrical Rating: FM – Class I, Div. 1 , Groups B, C, D; Class II, Div. 1, Groups E, F, G (150 psi integral mount), CSA Approved for Class 1, Division 2

Preamp Impedance: 10^{12} ohms minimum.

Ambient Temp: -20° to 140°F (-30° to 60° C) Display darkens over 158°F (70°C)

End Connections: 150 lb. or 300 lb.

Sensor Tube: 304 Stainless Steel

Process Temp:

Integral Mount:
Hard rubber, Soft rubber, Neoprene,
Polyurethane/Food Grade Polyurethane ..... -40 - 180°F
Tefzel®, Ceramic ..... - 40 - 212°F

Remote Mount (opt)
Tefzel® (to 300 psi), Ceramic ..... - 40 - 266 °F

High Temp Coils (opt)
Tefzel® (to 100 psi) ..... - 40 - 300 °F
Ceramic ..... - 40 - 420 °F

Selectable Damping: 0-99 sec.

Low Flow Cutoff: Selectable 0-9% of FS.

Options:

- Remote Mounted NEMA -4X Enclosure
- Remote Two-Stage Batching Transmitter
- Electrode Materials: Titanium, Hastelloy C, Monel, Zirconium, Tantalum, Platinum, Fused Platinum (ceramic only)
- Process Temperature to 420 °F (216 °C) (ceramic only)
- 12-60 Vdc operation
- Digital Communications (HART Protocol)
- Accidental/Permanent Submergence Proof Sensor (remote mount only)
- Removable Electrodes (6"-72" only)
- Hot-Tap Removable Electrodes (6" - 72" only)
- RS-485 Communication
- Alarm with relay contacts (remote mount only)

MODEL FM-656 SPECIFICATIONS

1.0 The magnetic flowmeter shall be microprocessor-based, and flanged. It shall indicate, totalize, and transmit flow in full pipes.

1.1 The magnetic flowmeter shall utilize DC bipolar pulsed coil excitation, operating at frequencies up to 100 Hz and automatically re-zeroing after every cycle.

1.2 The accuracy shall be at least 0.5% of flow rate over a 33:1 turndown at all flow rates above 1 fps. Accuracy shall be verified by calibration in a flow laboratory traceable to the U.S. National Institute of Standards and Technology.

1.3 The flow sensor liner shall be Ceramic, Hard Rubber, Soft Rubber, Neoprene, Polyurethane or *Tefzel*®. The housing shall be steel.

1.4 The integrally-mounted flow sensor and transmitter shall be FM approved for Class I, Division 1 & 2, Groups B, C, D and Class II, Division 1, Groups E, F, G environments without use of air purge. CSA Approved for Class 1, Division 2.

1.5 The electronics shall be integrally or remote mounted.

1.6 When remote mounted, the flowmeter transmitter shall be furnished in a NEMA-4X enclosure box, with a larger 3/8" character, 2-line 16 digit backlit display and 15 feet of cable (standard). Batch controller option available.

1.7 The flowmeter shall be suitable for operation at temperatures from -40°F to 266°F and at pressures from full vacuum to 740 psi. Temperatures to 420°F (optional).

1.8 The flowmeter electrodes on ceramic liners shall be fused platinum and shall not require O-rings.

1.9 The meter shall incorporate HI-Z circuitry. The preamplifier input impedance shall not be less than 10^{12} ohms. External ultrasonic electrode cleaners shall not be acceptable.

2.0 Available outputs shall be 1) Isolated analog 4-20 mAdc into 800 ohms (standard); 2) scaled pulse 24 Vdc with selectable 12.5/25/50/100 ms on time, max. freq. 60 Hz.; 3) 0-1000 Hz freq., for 0-100% flow rate. 15 Vdc; 4) two flow alarms; 5) fault, with open collector; 6) RS232 communication; 7) flow direction with open collector; 8) Positive Zero Return (PZR) for external relay contacts. Outputs 2 & 3 can be open collector if required.

2.1 Low flow cutoff shall be selectable from 0-9% of FS and there shall be two flow alarms settable from 0-99% of span.

2.2 A 2-line, 16 character backlit alphanumeric display shall indicate user-defined flow units and total flow. All menu advice and commands shall be visible on this display. The display shall be modular and rotatable 360°, in 90° increments. Characters shall be at least 0.125" high for ease of readability.

2.3 The flowmeter shall incorporate the MAG-COMMAND feature allowing menu selection and changes to be made from outside the housing via Hall-effect sensors. It shall not be necessary to remove covers, panels or fasteners to accomplish calibration or program changes.

2.4 The TigermagEP's unique diagnostic functions eliminate the need for a techican to carry test equipment or open the housing. Current ramp, complete coil check and true front-end input simulator may be activated in MAG-COMMAND without opening the enclosure.

2.5 The meter software shall incorporate a password feature preventing inadvertent program changes.

2.6 The meter shall feature nonvolatile E^2PROM memory and universal electronics module compatibility between all TigermagEP meters.

2.7 The flowmeter shall have a switching power supply having an operating range from 77 - 265 Vac 50/60 Hz (12-60 Vdc). Power consumption shall not exceed 20 Watts.

2.8 All printed circuit boards shall be contained in a plug-in module and be interchangeable for any size without requiring test equipment.

2.9 The flowmeter manufacturer shall have meters of the DC pulse type in similar flowing mediums for a minimum of five years.

3.0 The flowmeter shall be warranted against defective workmanship or materials for a period of two years from date of shipment.

4.0 Totalized flow and programmed configuration shall be maintained in memory for the meters lifetime.

5.0 The flowmeter shall be MODEL 656 TigermagEP™ as manufactured by Sparling Instruments, Inc.

SPARLING INSTRUMENTS, INC.
4097 N. Temple City Blvd. • P.O. Box 5988 • El Monte, CA USA 91731
Ph (626) 444-0571 • Fx (626) 452-0723
Internet: http://www.sparlinginstruments.com • E-mail: sales@sparlinginstruments.com

ISO-9001 DNV CERTIFICATED FIRM

04/02 Printed in U.S.A.(Dist. 05/04)
© 2002 Sparling Instruments, Inc. All rights reserved

CST STORAGE
345 Harvestore Drive
Dekalb, IL 60115-9607 U.S.A.
815-756-1551 Phone, 815-756-7821 Fax

QMS REGISTERED
0534
ISO9001 CERTIFIED

Project Name: ***SAND COULEE MT***
Project Location: ***CASCADE COUNTY, MONTANA***

Dealer: ***Engineering America, Inc.***
647 Hale Avenue N.
Oakdale, Minnesota, 55128
Phone: (651) 777-4041 Fax: (651) 777-5312

Project Number: ***1409911***

Submittal Release.No.: ***2***

Aquastore Glass Fused to Steel Bolted Storage Tank

31' diameter (nom.) x 28' high (nom.) Model 3128
Short Starter Foundation

Shell interior coating:
Vitrium fused glass with Edgecoat process

Shell exterior coating:
Fused glass

Shell Exterior Color: ***Cobalt Blue***

Roof Exterior Color: ***Cobalt Blue***

Date: September 03, 2014

MADE IN AMERICA WITH AMERICAN STEEL

EQuote # 1409911 rev. 6

Construction Method: Jack

This document consists of 24 pages.

Submitted by: Date:	Date: 9/4/2014 MONTANA JOHN J. SWEENEY NO. 11495 PE LICENSED PROF. ENGINEER	Date: Expires:

Tank Project Drawing Index

Document Number	Document Title
1409911-001	Tank Drawing
1409911-010	Tank Calculations & Design Formulas
1409911-011	Tank General Notes
1409911-012	Tank Fastener Schedule
1409911-013	Tank Schematic
1409911-014	Tank Parts List

Foundation Project Index

1409911-002	Short Starter Foundation Drawing
1409911-003	Anchor Bolt & Leveling Plate Placement
1409911-020	Foundation Calculations
1409911-021	Foundation General Notes
1409911-022	Foundation Materials Schedule
1409911-023	Foundation Parts List
1409911-024	Foundation Fastener Schedule
1409911-025	Manufacturers Warranty

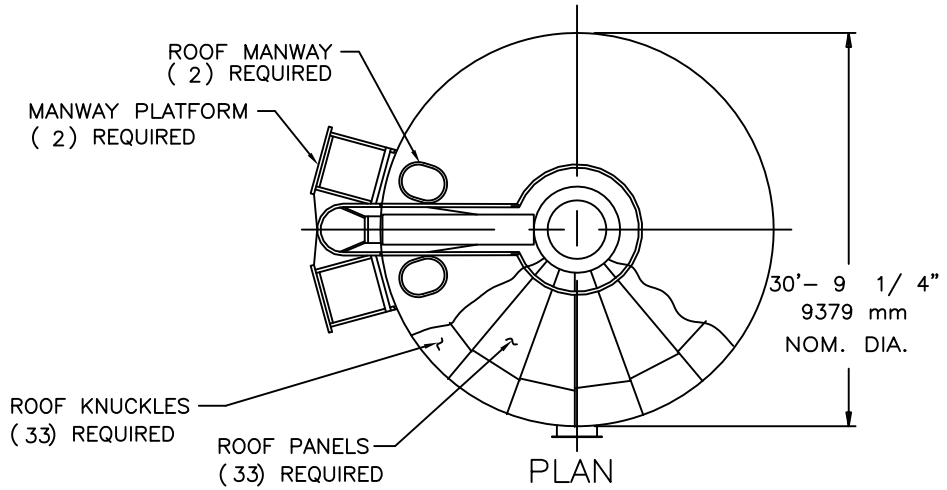

PLAN

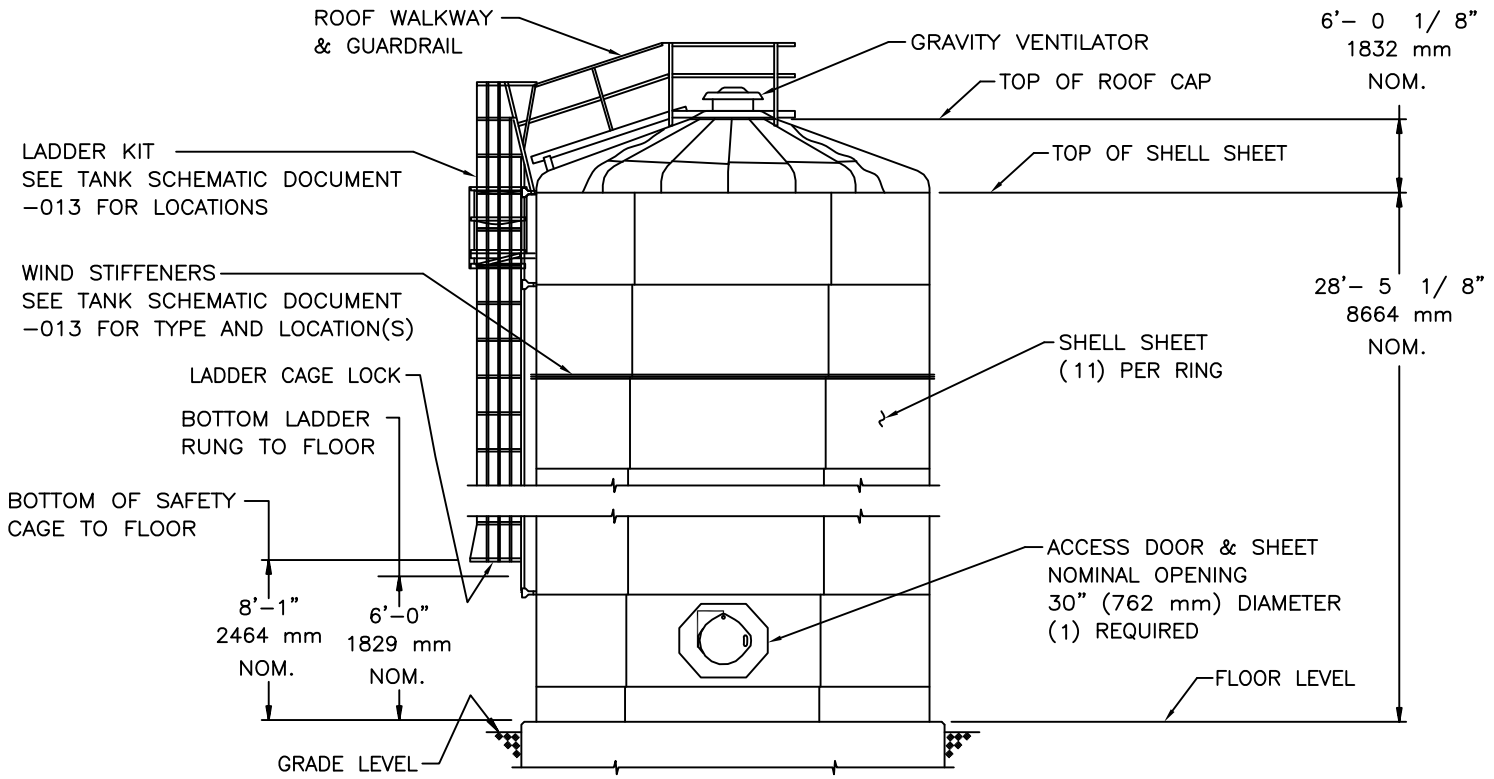

ELEVATION

NOTES:
1. THIS DRAWING IS NOT TO SCALE.
2. REFER TO TANK SCHEMATIC DOCUMENT –013 FOR NUMBER OF RINGS IN TANK AND RESPECTIVE SHEET THICKNESSES.
3. THIS TANK IS NOT DESIGNED FOR ANY EXTERNAL HYDROSTATIC LOADING.

TANK DESIGN FREEBOARD	12 in 305 mm

REL	DESCRIPTION
1	REL PER MIP 1409911 08/05/14
2	REVISED PER CUSTOMER REQUEST 09/04/14

PANEL INTERIOR COATING:
VITRIUM FUSED GLASS WITH EDGECOAT PROCESS
PANEL EXTERIOR COATING:
FUSED GLASS
SHELL COLOR: COBALT BLUE
ROOF COLOR: COBALT BLUE

CST STORAGE

DEKALB, ILLINOIS 60115

CONFIDENTIAL
THIS DRAWING IS THE PROPRIETARY PROPERTY OF CST STORAGE AND SHALL NOT BE USED NOR REPRODUCED WITHOUT THE EXPRESS WRITTEN CONSENT OF THE COMPANY.
CST STORAGE COPYRIGHT ©2014
ALL RIGHTS RESERVED

FILE: 1409911A

DRAWN BY RRL
DATE 08/05/14

3128 SSWT
SZ AWWA D103–09
SAND COULEE MT
CASCADE COUNTY,
MONTANA

DRWG NO. 1409911–001

REL.: 2

DATE: September 03, 2014

BY: BB

SUMMARY OF TANK DESIGN INPUT DATA

STRUCTURE MODEL	31 28	
FOUNDATION TYPE	Short Starter	
SPECIFIC GRAVITY	1.000	
H/V PRESSURE RATIO	1.000	
FREEBOARD	12.000 in	304.800 mm
ROOF TYPE	Knuckle	
ROOF WEIGHT	5.000 psf	24.410 kg/m2
SC ROOF HEIGHT	2.500 in	63.500 mm
DC ROOF PROJ AREA	105.410 sq ft	9.793 sq m
DC ROOF CENTROID	25.070 in	636.778 mm
TOTAL ROOF HEIGHT	72.140 in	1832.356 mm
ROOF SNOW LOAD	40.000 psf	1.916 kPa
WIND DESIGN LOAD PER	AWWA D103-09 (18.00 psf)*	
EXPOSURE DIRECTION	ALL	
EXPOSURE FACTOR	C	
Iw	1.15	
BASIC WIND SPEED (3-SECOND GUST)	100.000 mph	45.000 m/s
WIND STIFFENER ANALYSIS	AWWA D103-09 (18.00 psf)*	
SEISMIC DESIGN	AWWA D103-09	
Ss	0.210	
S1	0.078	
TL	6.0	
SEISMIC IMPORTANCE FACTOR	1.250	
SDs	0.140	
SD1	0.052	
SITE CLASS	B	
FLAT BOTTOM GROUND SUPPORTED ANCHORED TANK.		
DESIGN BASE SHEAR	V =0.031 W	
ANALYSIS PROCEDURE	AWWA D103-09	
ALLOWABLES USED	AWWA D103-09	

SUMMARY OF INTERNALLY ASSIGNED PARAMETERS

BOLT DIAMETER	0.500 in	12.700 mm
HOLE DIAMETER	0.562 in	14.288 mm
TOP COURSE EDGE DIST	1.000 in	25.400 mm
CONCRETE IN FNDN	0.000 in	0.000 mm
DIST T/FTG TO B/FLR	0.000 in	0.000 mm
TOTAL FNDN THICKNESS	0.000 in	0.000 mm
SHEET DENSITY	590.000 pcf	9451 kg/m3
STEEL ELASTIC MODULUS	30000000 psi	206843 MPa
CONCRETE DENSITY	0 pcf	0 kg/m3
NET SHEET WIDTH	105.462 in	2679.000 mm
NET STANDARD SHEET HT.	54.990 in	1397.000 mm
STARTER PANEL HEIGHT	10.170 in	258.000 mm
INVENTORY USED	ws(1111)	

31 28 AQUASTORE STRUCTURE DESIGN SUMMARY (11 FULL LENGTH SHEETS PER RING/COURSE)

COURSE NUMBER	THICK In.	THICK mm	GEOM CODE	MAT CODE	LIMITING FACTOR(S)
1	0.094	2.388	1101	110	
2	0.094	2.388	1101	110	
3	0.099	2.515	1201	2	[15, 16]
4	0.099	2.515	1201	2	
5	0.099	2.515	1201	2	
6	0.132	3.353	1201	2	[15]
FND	0.132	3.353	5320	2	

WIND STIFFENERS REQUIRED:

STIFFENER AT BOTTOM OF COURSE 2	=	0.876cu in	3 Web Truss
STIFFENER AT BOTTOM OF COURSE 4	=	0.868cu in	3 Web Truss
STRUCTURE DIAMETER	=	30.77 ft	9379.35 mm
HEIGHT OF STRUCTURE TO EAVE	=	28.43 ft	8664.19 mm
SLOSHING WAVE HEIGHT	=	0.47 ft	142.60 mm
MINIMUM FREEBOARD	=	0.00 ft	0.00 mm
VOLUME OF STRUCTURE TO EAVE	=	21141 cu ft	599 m3
VOLUME OF CONTENTS	=	20397 cu ft	578 m3
VOLUME OF CONTENTS	=	152580 gal	577577 L
VOLUME OF CONCRETE FND.	=	0 cu ft	0 m3
WEIGHT OF EMPTY CYLINDER ABOVE FLOOR	=	13971 lb	6337 kg
WEIGHT OF ROOF	=	3719 lb	1687 kg
SNOW (LIVE) LOAD	=	29748 lb	13494 kg
WEIGHT OF CONTENTS	=	1272769 lb	577318 kg
FOUNDATION WEIGHT	=	0 lb	0 kg
TOTAL WEIGHT ON FOOTING	=	1320206 lb	598835 kg
WIND SHEAR AT TOP OF FOOTING	=	17442 lb	77584 N
WIND MOMENT AT TOP OF FOOTING	=	275653 ft-lb	374 kN-m
SEISMIC SHEAR AT TOP OF FOOTING	=	41072 lb	182698 N
SEISMIC MOMENT AT TOP OF FOOTING	=	455274 ft-lb	617 kN-m

HOOP STRESS ANALYSIS

---- STRESS-PSI ----

Course Number	Depth (ft)	Press (PSI)	Net Tensile	Allowable Tensile	Hole Bearing	Allowable Bearing	Bolt Shear	Allowable Shear
1	3.7	1.6	4251	14566	13198	40500	3159	29454
2	8.2	3.6	9564	14566	29697	40500	7108	29454
3	12.8	5.6	14126	25400	21931	67500	5529	29454
4	17.4	7.5	19172	25400	29764	67500	7503	29454
5	22.0	9.5	24217	25400	37596	67500	9478	29454
6	26.6	11.5	21946	25400	34072	67500	11453	29454
FND	27.4	11.9	20375	25400	29487	67500	9912	29454

AXIAL STRESS ANALYSIS

---- STRESS-PSI ----

Course Number	Axial Compressive	Allowable Compressive	Hole Bearing	Allowable Bearing	Bolt Shear	Allowable Shear
1	326	1001	3271	40500	783	29454
2	344	1001	3460	40500	828	29454
3	346	1053	3474	67500	876	29454
4	365	1053	3662	67500	923	29454
5	383	1053	3851	67500	971	29454
6	306	1396	3077	67500	1034	29454
FND	310	1396	3111	67500	1046	29454

WIND STRESS ANALYSIS

---- STRESS-PSI ----

Course Number	Axial Comp	Wind Bending	Total Comp	Allowable Comp	Hole Bearing	Allowable Bearing	Bolt Shear	Allowable Shear
1	53	21	74	1335	742	54000	178	39272
2	72	51	123	1335	1235	54000	296	39272
3	87	91	177	1404	1782	90000	449	39272
4	106	146	251	1404	2524	90000	636	39272
5	124	214	338	1404	3398	90000	857	39272
6	112	222	334	1861	3350	90000	1126	39272
FND	116	234	349	1861	3510	90000	1180	39272

SEISMIC STRESS ANALYSIS

---- STRESS-PSI ----

Course Number	Axial Comp	Seismic Bending	Total Comp	Allowable Comp	Hole Bearing	Allowable Bearing	Bolt Shear	Allowable Shear
1	53	64	117	1335	1170	54000	280	39272
2	72	122	193	1335	1943	54000	465	39272
3	87	200	287	1404	2885	90000	727	39272
4	106	314	420	1404	4215	90000	1063	39272
5	124	457	581	1404	5834	90000	1471	39272
6	112	476	588	1861	5904	90000	1985	39272
FND	116	503	618	1861	6211	90000	2088	39272

SEISMIC STRESS ANALYSIS CONTINUED

Course Number	---- STRESS-PSI ---- Hydro-Dynamic Hoop	Total Hoop	Allowable Tensile
1	190	4441	19421
2	371	9935	19421
3	488	14615	33867
4	588	19759	33867
5	652	24869	33867
6	522	22468	33867
FND	528	20903	33867

TANK DESIGN SPECIFICATIONS

This tank is designed in accordance with **AWWA Standard D103-09** allowable stresses.
See page 1 of Document 1409911-010 for Summary of Tank Design Input Data.

COATINGS SPECIFICATIONS

Coatings used on components of this tank are in compliance with the appropriate sections of AWWA Standard D103.

STRUCTURE BOLT SPECIFICATIONS

Structure bolts are carbon steel, zinc mechanically deposited per the latest revision of ASTM B695, class 50,type 1;with 1/2"-13 UNC-2A thread, and conform to AWWA D103,Section 4.2.1 & 4.2.2, as noted below.
A. 1 inch long and 1-1/4 inch long bolts conform to the mechanical properties of SAEJ429, Grade 5 - equivalent to the mechanical properties of ASTM A325.
B. 1-1/2 inch long and longer bolts conform to the mechanical properties of SAEJ429, Grade 8 - equivalent to the mechanical properties of ASTM A490.
Unless noted, all tank structure connections are bearing type connections, snug-tight condition, per ANSI/AISC 360-05. Tank manufacturer does not require special inspection per IBC, Section 1704.

APPURTENANCE AND PIPING ORIENTATION

Orientation of all appurtenances and piping connections shall be established in the field.

THROUGH-THE-SHEET PENETRATIONS

All openings through the tank side wall greater than 2 inches (51mm) in diameter shall be reinforced in accordance with AWWA D103, Section 5.10. All openings through sheets having less than 24 inches (610 mm) between horizontal bolt lines, or having less than 24 inches (610 mm) of available sheet space from the floor surface up to the first horizontal bolt line shall not exceed a diameter of 2 inches (51 mm). These openings of 2 inches (51 mm) and less shall be reinforced in accordance with AWWA D103, Section 5.10.

ATTACHEMENTS TO THE TANK SHELL

Per AWWA D103, all attachments made to the tank shall be designed so that no significant load is imparted on the tank wall. Attachements include those for piping, nozzles, mixers, brackets, supports, etc. Unless noted otherwise in this document, this tank is not designed to support any loads from attachments.

LADDER AND ROOF SPECIFICATIONS

The ladder and roof walkway systems are manufactured in compliance with AWWA Standard D103 Section 7.4. and meet minimum OSHA requirements. In addition, the tank ladder side rails are fabricated from 6061-T6 aluminum while the ladder rungs are fabricated from 6061-T4 aluminum.

ROOF MANWAY OPENING

Field cut roof manway opening from roof panel and/or roof knuckle using the outside edges of the prepunched notches and holes as the opening outline. (Do not use a cutting torch to perform this operation.) Apply sealer to the appropriate roof surfaces and field cut edges.

CATHODIC PROTECTION SPECIFICATIONS

This tank is equipped with a cathodic protection system conforming to NACE SP0196-2011. This system is designed to protect the items described below.

Entire submerged portion of tank sidewall and floor area including appurtenances supplied by the tank manufacturer. Submerged uncoated metal objects not supplied by the tank manufacturer totaling: 0 sq. ft.

Submerged coated metal objects not supplied by the tank manufacturer totaling: 0 sq. ft.

This system is suitable for use in liquid having a resistivity of 3500 - 5000 ohm-centimeters.

Field verification of liquid resistivity is required after the tank is placed into service.

The performance of the cathodic protection system may be adversely affected if the system is operated outside the resistivity range above.

The presence of submerged uncoated metallic items, for which cathodic protection has not been provided by the tank supplier, may also adversely affect the performance of the cathodic protection system.

Electrical isolation and/or the determination of the cathodic protection requirements for such submerged items shall be the responsibility of the owner or the owner's designated agent.

Tank warranty issues may also be affected.

For further information, refer to the instructions provided with the cathodic protection system.

Structure bolt quantities at (H)orizontal and (V)ertical seams

	Thru the sheet fasteners							Truss Fasteners			
BOLT LENGTHS:	1" 25.40	1 1/4" 31.75	1 1/2" 38.10	1 3/4" 44.45	2" 50.80	2 1/4" 57.15	2 1/2" 63.50	1 1/4" 31.75 C.S.	2 1/4" 57.17 C.S.	3" 76.20 C.S.	3 1/2" 88.90 C.S.
GRAVITY VENT	24										
CAP	66										
PANEL/KNUCKLE	1811	4									
MANWAY		32									
SEAM Wide H 1	191	40	0	0	0	0	0	0	0	0	0
SEAM V 1	275	0	0	0	0	0	0	0	0	0	0
SEAM Wide H 2	214	28	0	0	0	0	0	0	0	0	0
SEAM V 2	275	0	0	0	0	0	0	0	0	0	0
SEAM Wide H 3	143	99	0	0	0	0	0	154	0	0	0
SEAM V 3	561	0	0	0	0	0	0	0	0	0	0
SEAM Wide H 4	218	24	0	0	0	0	0	0	0	0	0
SEAM V 4	561	0	0	0	0	0	0	0	0	0	0
SEAM Wide H 5	143	99	0	0	0	0	0	154	0	0	0
SEAM V 5	561	0	0	0	0	0	0	0	0	0	0
SEAM Wide H 6	218	24	0	0	0	0	0	0	0	0	0
SEAM V 6	561	0	0	0	0	0	0	0	0	0	0
SEAM Fnd. H 7	220	22	0	0	0	0	0	0	0	0	0
ACCESS DOOR	0	0	36	0	0	0	0	0	0	0	0
REINF. PLT.	0	110	0	0	0	0	0	0	0	0	0
Total:	6042	482	36	0	0	0	0	308	0	0	0

Note: All brackets located at top of specified ring.

Ring are identified from top of tank to foundation

Ring #	Sheet Thick.	Bracket Type	Bracket Quantity	Vertical Bolt Line	Shell Sheet Part No.
RING # : 1	0.094" (2.4mm)	Y-BRKT	6	1V	256047K0100
RING # : 2	0.094" (2.4mm)	Y-BRKT	6	1V	256047K0100
-----(TYPE 3 Web Truss #261847)					
RING # : 3	0.099" (2.5mm)	NONE	0	2V	256050-0100
RING # : 4	0.099" (2.5mm)	Y-BRKT	2	2V	256050-0100
-----(TYPE 3 Web Truss #261847)					
RING # : 5	0.099" (2.5mm)	NONE	0	2V	256050-0100
RING # : 6	0.132" (3.4mm)	Y-BRKT	2	2V	256050-1200
FND. :	0.132" (3.4mm)	NONE	0	3V	See fnd. parts list

Item	Quantity	Part No.	Description
-	1	1409911-001	TANK ASSEMBLY
1	1	1409911-002	FOUNDATION ASSEMBLY
2	1	266147J2300	ROOF CAP
3	33	251119J2200	ROOF PANEL, COLOR
4			
5	31	253916J2200	ROOF KNUCKLE, COLOR
6	2	266113J2206	ROOF KNUCKLE W/MANWAY C-OUT, COLOR
7			
8	99	263156-001	PLASTIC ENCAPSULATED NUT
9	1	255469-000	GRAVITY VENTILATOR
10	1	258028-000	ROOF GUARDRAIL ASSEMBLY
11	2	264391-000	MANWAY PLATFORM ASSEMBLY
12	2	263883-000	ROOF MANWAY ASSEMBLY
13	5	267692-000	EDGE TRIM
14	8	265777-203	SEALER 98, CARTONS (BLACK)
15	1	268476-000	FALL PROTECTION BRACKET
16			
17	1	258447-003	LADDER W/CAGE KIT
18	1	264769-000	LADDER DOOR ASSEMBLY
19			
20			
21	1	277652-000	GASKET, 30"
22	1	266215-1000	REINFORCING PLATE, .262"
23			
24			
25			
26			
27			
28			
29			
30			
31	154	261847-000	WEB TRUSS, 3"
32			
33			
34			
35			
36			
37			
38			
39			
40			
41			
42			
43			
44	6042	262000-001	STRUCTURE BOLT, 1"
45	482	262000-002	STRUCTURE BOLT, 1 1/4"
46	36	262000-003	STRUCTURE BOLT, 1 1/2"
47			
48			
49			
50			
51	308	262415-001	HHCS 1/2 X 1 1/4" SPCL. FNSH.
52			
53			
54			
55	308	261974-000	WASHER, SPECIAL
56	6615	252275-000	WASHER, 1/2"
57	6461	262416-001	HEX. NUT, 1/2" HDZ
58	308	263525-001	HEX. NUT, 1/2" MDZ

Item	Quantity	Part No.	Description
59			
60	6	264913-000	BUSS BAR
61	1	276534-000	AQUASTORE CP LIT. PACK
62			
63	2	266680-000	CATHODIC PROT. SYSTEM - MAG.
64			
65			
66	4	262778-000	DANGER DECAL
67	3	257249-000	INFORMATION SIGN
68	1	266182-000	NAMEPLATE
69	1	271220-000	OPERATORS MANUAL
70	3	262166-000	IMPORTANT DECAL
71	3	260581-000	TANK MOD. WARNING DECAL
72			
73			
74	8	260910-000	Y BRACKET ASSY. SET (SHORT)
75			
76			
77			
78			
79			
80			
81	1	266217-1202	30" ROUND ACCESS DOOR SHEET
82			
83	1	262334-031	30" ACCESS DOOR, NORMAL DUTY, STANDARD (HDG)
84			
85			
86	22	256047K0100	SHELL SHEET 0.094" HRS
87	33	256050-0100	SHELL SHEET 0.099" HSLA
88			
89	10	256050-1200	SHELL SHEET 0.132" HSLA
90			
91			
92			
93			
94			
95			
96			
97			
98			
99			
100			
101			
102			
103			
104			
105			
106			
107			
108			
109			
110			
111			
112			
113			
114			
115			
116			
117			
118			

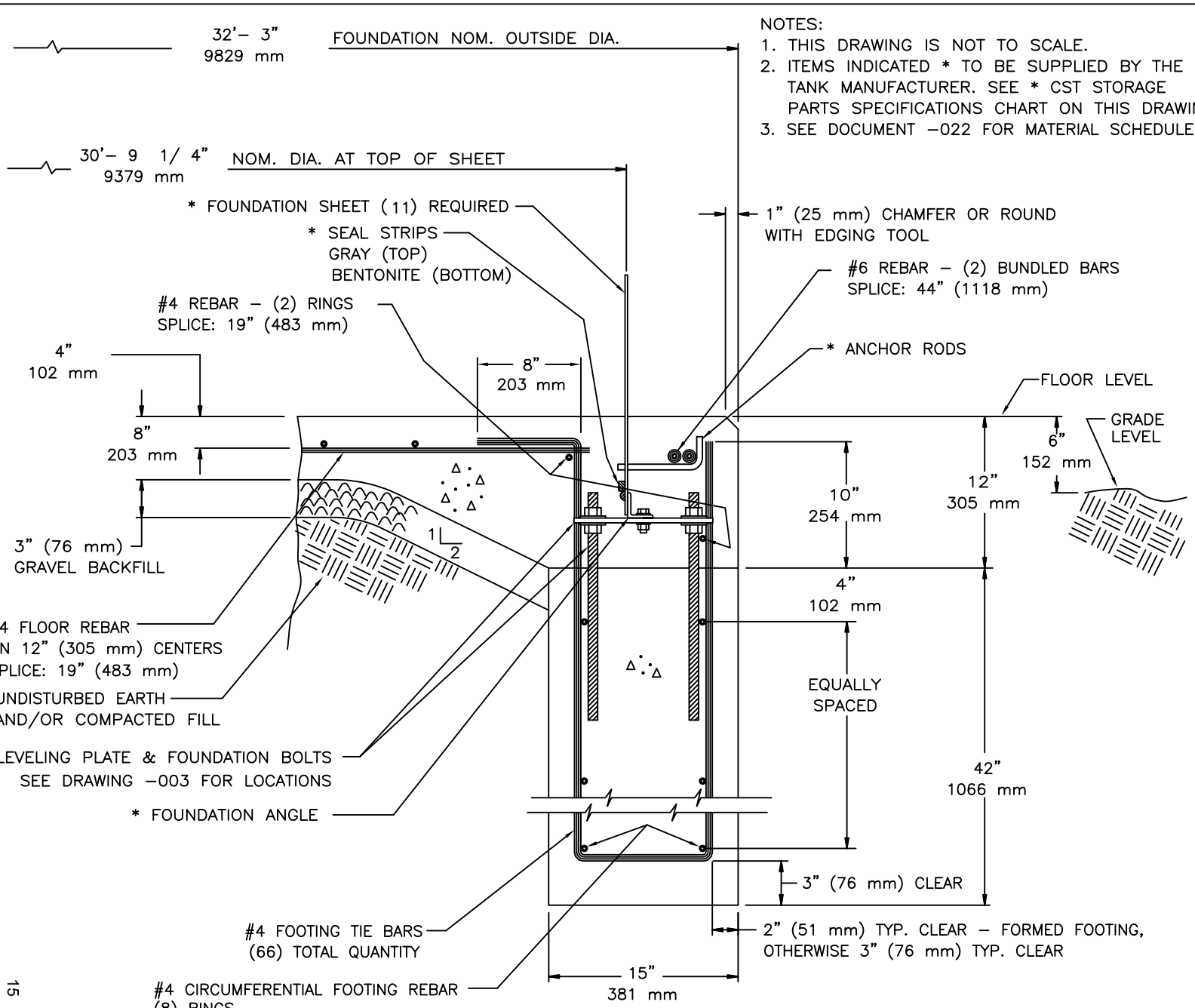

SECTION THROUGH FOOTING

NOTES:
1. THIS DRAWING IS NOT TO SCALE.
2. ITEMS INDICATED * TO BE SUPPLIED BY THE TANK MANUFACTURER. SEE * CST STORAGE PARTS SPECIFICATIONS CHART ON THIS DRAWING.
3. SEE DOCUMENT –022 FOR MATERIAL SCHEDULE.

REL	DESCRIPTION
1	REL PER MIP 1409911 08/05/14
2	REVISED PER CUSTOMER REQUEST 09/04/14

* CST STORAGE PARTS SPECIFICATIONS		
ANCHOR RODS	IN.	1/2 DIA
	mm	13 DIA
		(2) PER SHEET
FOUNDATION ANGLES	IN.	2 x 2 x 1/4
	mm	51 x 51 x 6
		(1) PER SHEET
LEVELING PLATES	IN.	3/8 x 3–1/2 x 11
	mm	10 x 89 x 279
		(2) PER SHEET
FOUNDATION BOLTS	IN.	3/4 DIA. x 18 LG.
	mm	19 DIA. x 457 LG.
		(4) PER SHEET

CST STORAGE

DEKALB, ILLINOIS 60115

CONFIDENTIAL
THIS DRAWING IS THE PROPRIETARY PROPERTY OF CST STORAGE AND SHALL NOT BE USED NOR REPRODUCED WITHOUT THE EXPRESS WRITTEN CONSENT OF THE COMPANY.
CST STORAGE COPYRIGHT ©2014
ALL RIGHTS RESERVED

FILE: 1409911B

DRAWN BY RRL
DATE 08/05/14

31' SHORT STARTER FND.
SZ AWWA D103–09
SAND COULEE MT
CASCADE COUNTY,
MONTANA

DRWG NO. 1409911–002

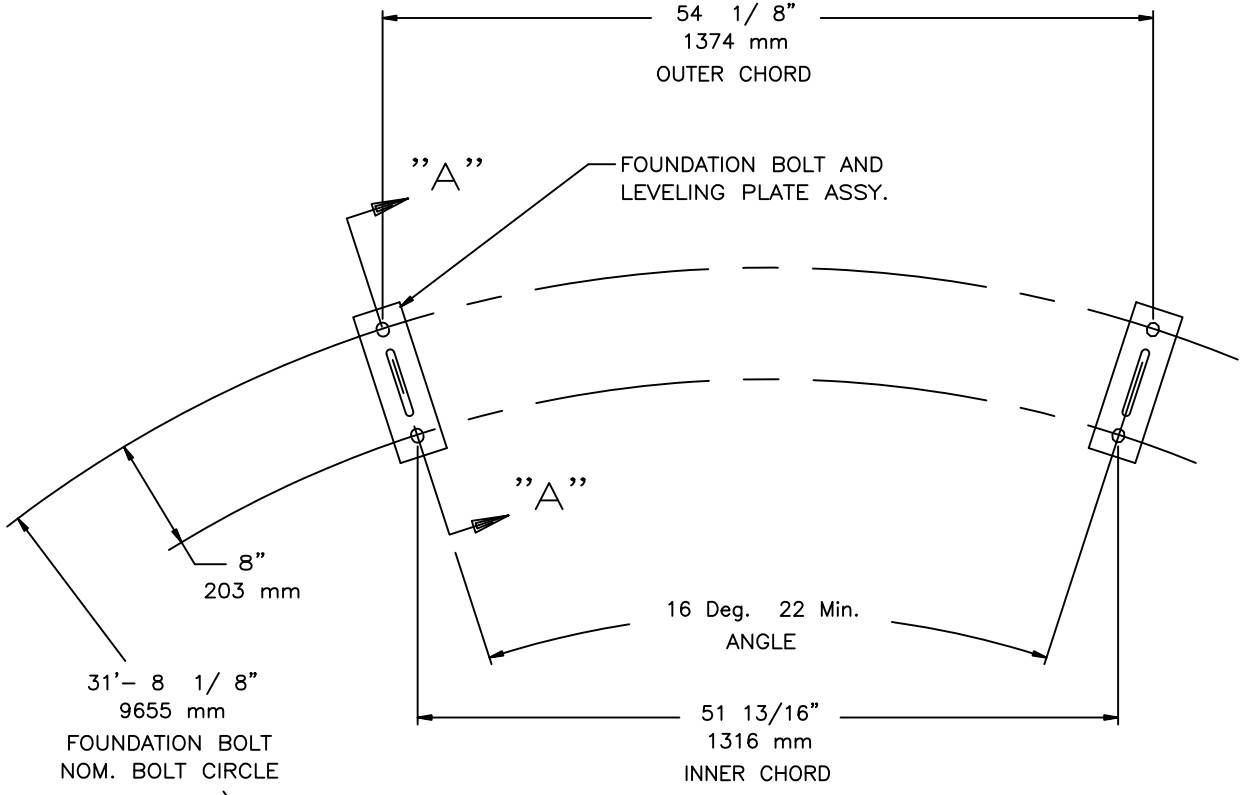

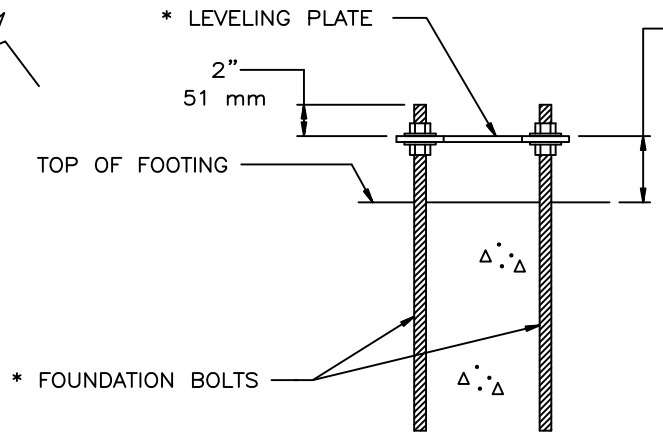

SECTION "A–A"

NOTES:
1. THIS DRAWING IS NOT TO SCALE.
2. ITEMS INDICATED * TO BE SUPPLIED BY THE TANK MANUFACTURER. SEE * CST STORAGE PARTS SPECIFICATIONS CHART ON DRAWING –002.
3. PLACEMENT OF ANCHOR BOLTS TO BE WITHIN 1/2" (13 mm) OF INDICATED CHORD DIMENSIONS.

FOOTING FOUNDATION BOLT AND LEVELING PLATE LOCATIONS

REL	DESCRIPTION
1	REL PER MIP 1409911 08/05/14

CST STORAGE

DEKALB, ILLINOIS 60115

CONFIDENTIAL
THIS DRAWING IS THE PROPRIETARY PROPERTY OF CST STORAGE AND SHALL NOT BE USED NOR REPRODUCED WITHOUT THE EXPRESS WRITTEN CONSENT OF THE COMPANY.
CST STORAGE COPYRIGHT ©2014
ALL RIGHTS RESERVED

FILE: 1409911C

DRAWN BY RRL
DATE 08/05/14

31' SHORT STARTER FND.
SZ AWWA D103–09
SAND COULEE MT
CASCADE COUNTY,
MONTANA

DRWG NO. 1409911–003

TANK DESIGNATION: **1409911-REL2** Engineer: BB 9/3/2014

INPUT:

Tank Diameter (ft):	30.77	Design per:	ACI 318-05
Contents Height (ft):	27.43	Tank Type:	Embedded
Slab Thickness (in):	8	Embedded sheet thickness (in):	0.132
Slab O.D. (ft):	32.25	Embedment depth (in):	6.75
Foundation Depth (in):	12		
Footer Depth (in):	42		
Footer Width (in):	15	Self or Center Supported Roof :	Self
Allowable soil pressure (psf)	2,000	Specific Gravity of Contents:	1.00
Wind Shear (lbs):	17442	Subgrade Modulus - ks (pci):	56
Wind Moment (ft-lb):	275,653	Coeff. Active pressure - K_a:	0.3
Seismic Shear (lbs):	41072	Concrete strength - f'_c (psi):	4,000
Seismic Moment (ft-lb):	455,274	Yield strength of steel - f_y (ksi):	60
Sloshing Wave Height (ft):	0.47		
Weight of Tank (lbs):	13,971		
Weight of Roof (lbs):	3,719		
Snow Load (psf):	40		

TANK DESIGNATION: **1409911-REL2** Engineer: BB 9/3/2014

RESULTS:

Soil Pressure:				
dead plus live load:	1835 psf	<=	2000 psf	(Allowable)
dead plus live plus wind load:	1958 psf	<=	2667 psf	(4/3 * Allowable)
dead plus live plus seismic load:	1985 psf	<=	2667 psf	(4/3 * Allowable)
dead minus wind load:	187 psf		No Uplift	
dead plus live minus seismic load:	1642 psf		No Uplift	
Shear stress at inside of footer =	41 psi	<=	95 psi	Shear Strength
F.S .Overturning - Seismic w/ 45° line:	10.21	>=	1	Required
F.S. Overturning - Seismic (AWWA):	5.38	>=	1	Required
F.S. Overturning - Wind:	9.07	>=	1.5	Required

A_s - foundation (both ways) layer at mid-height:	0.17	sq.in./ft	[# 4 @ 12" o.c.]
A_s - curb area:	0.89	sq.in.	[2 - # 6]
A_s - footer bottom layer:	0.40	sq.in.	[2 - # 4]
A_s - hoop steel:	0.87	sq.in.	[6 - # 4]
A_s - vertical tie bars (2 legs):	0.27	sq.in./ft	[# 4 @ 17.5" o.c.]

Minimum guidelines and specifications are given below. The owner or the owner's designated agent may amend or modify these guidelines and specifications, but in no case shall the requirements be less than those given below

FOUNDATION DESIGN

See Tank Foundation Design Input Data Sheet for foundation design data.

SITEWORK

1. Clear the site of all vegetation, organic materials, rubbish, debris, and other foreign or objectionable materials above the ground surface. Remove all stumps, large roots, buried logs, and other objectionable materials below the ground surface.

2. Soil beneath the entire tank shall have a minimum bearing capacity of 2000 PSF (95761 Pa) and shall be suitable in all respects to properly support the tank as determined by a qualified professional retained by the owner or the owner's designated agent.

3. Compact the subsoil to site specifications.

4. Orientation of connecting piping shall be established in the field.

5. Place all underground piping. Backfill and compact to site specifications. Inlet/outlet piping may penetrate ring walls provided the hole size is less than or equal to one half the wall height; all details of reinforcement cushioning needs, thrust blocks, and encasement shall be provided by others. Otherwise, all piping must pass beneath the footing unless the footing/foundation system has been designed and fully detailed by others to accommodate both a pipe passing through it and the proper transfer of tank loads to the supporting soil.

6. If conditions exist which require footing and/or floor design details differing from those shown on the drawings herein, such new design and details shall be provided by the owner or the owner's designated agent. CST Storage can not
show details on its drawings other than those derived as a result of the design efforts of its own Engineering Department.

CONCRETE WORK

Concrete work shall conform to the requirements of ACI 301-05, published by the American Concrete Institute, Farmington Hills, Michigan, except as modified by the supplemental requirements noted below.

1. Concrete shall attain an ultimate 28 day compressive strength of 4000 PSI (27579 KPa).

2. Reinforcing bars shall conform to ASTM A615, grade 60. Welding of bars is not permitted. Field bending of partially embedded reinforcing bars shall conform to Section 3.3.2.8.

3. Cement shall conform to ASTM C150, Type I or Type II with air entraining admixture per ASTM C260 added at the mixer to achieve 4-6% by volume of entrained air at the point of concrete placement.

4. Maximum aggregate size shall be 1 1/2" (38 mm). Fine and coarse aggregate shall conform to ASTM C33, and the restrictions on reactive materials specified in ASTM C33, paragraphs 7.3 and 11.2, shall apply.

5. Ready mixed concrete shall conform to ASTM C94, Option A. The supplier shall be responsible for determining the proportions used in the concrete mix.

6. Earth cuts may be used as formwork for footings only, provided the footing depth does not exceed 48" (1219 mm).

7. Finished surfaces
   A. Rough form finish is acceptable for vertical surfaces.
   B. Floated finish is required for the floor surface.

8. The following sections of ACI 301-05 do not apply:
   6 - Architectural Concrete
   7 - Lightweight Concrete
   8 - Mass Concrete
   9 - Prestressed Concrete
   10 - Shrinkage-compensating Concrete

These materials are to be furnished by the builder. Quantities are estimated.

CONCRETE AND GRAVEL REQUIREMENTS:

CONCRETE IN FLOOR:-		
Per 8" depth (203.2 mm)	22 cu. yds	16.9 m3
CONCRETE IN FOOTING:-		
Per 1" depth (25.4 mm)	0.4 cu. yds	0.3 m3
GRAVEL:-		
Per 3.0" depth (76.2 mm)	6.6 cu. yds	5.1 m3

Item	Quantity	Part No.	Description
-	1	1409911-002	SS FOUNDATION ASSEMBLY
1	11	261712-1200	0.132" FND. SHT. HSLA
2	11	257573-031	FOUNDATION ANGLE
3	11	273882-000	SPLICE ANGLE
4	11	261067-000	TAPERED SPACER
5			
6			
7			
8			
9			
10	44	013713-003	FOUNDATION BOLT, 3/4"
11	88	013542-005	WASHER,STD., 3/4"
12	88	013543-006	HEX. NUT, 3/4"
13	22	257516-000	LEVELING PLATE
14			
15	22	019030-000	ANCHOR ROD, 1/2"
16			
17	12	252488-000	SEAL STRIP
18	3	265777-203	SEALER 98, CARTONS (BLACK)
19			
20	6	266030-000	BENTONITE SEAL STRIP
21			
22	1	253730-002	SEALER PRIMER
23			
24			
25			
26			
27			
28			
29			
30			
31			
32			
33			
34	22	017500-086	CAP SCREW 1/2" X 1 3/4"
35			
36	176	262000-001	STRUCTURE BOLT 1"
37	198	262000-002	STRUCTURE BOLT 1 1/4"
38	44	262000-003	STRUCTURE BOLT 1 1/2"
39			
40			
41	484	262416-001	HEX NUT, 1/2" HDZ
42	506	252275-000	WASHER, 1/2"
43			
44			
45			
46			
47			
48			
49			

BOLT LENGTHS:	1" 25.40	1 1/4" 31.75	1 1/2" 38.10	1 3/4" 44.45	2" 50.80	ANCHOR RODS
VERTICAL	176	0	0	0	0	22
HORIZONTAL	0	198	44	0	0	

MANUFACTURER'S EXTENDED WARRANTY

One-Year Warranty

CST Storage warrants that an Aquastore® brand liquid storage tank will be free from defects in workmanship and materials, under normal and proper use, maintenance and operation, during the period expiring on the earlier of (i) one year after liquid is first introduced into the tank or (ii) 14 months after shipment from the factory.

10-Year Extended Performance Warranty

CST Storage further warrants that the glass coated product zone surfaces (that portion of the tank interior below the normal high elevation of the contained liquid) of an Aquastore brand liquid storage tank will not corrode, under normal and proper use, maintenance and operation, during the period expiring on the earlier of (i) 120 months after liquid is first introduced into the tank or (ii) 122 months after shipment from the factory, if the tank is purchased with an Aquastore brand cathodic protection system.

Limitations and Conditions

The CST Storage Limited Warranties are subject to the following limitations and conditions:

a. The CST Storage Limited Warranties shall remain in effect only as long as the tank is used for the storage of municipal potable water or municipal sewage waste water. The CST Storage Limited Warranties shall become void and terminate should the tank be used for storage of any other liquid.

b. The CST Storage Limited Warranties do not cover corrosion due to damage caused by shipping, handling or tank erection, or damage caused by operating or maintenance activities. CST Storage makes no warranty about and shall not be responsible for any defects in erection or installation of a tank.

c. The CST Storage Limited Warranties shall become void and terminate if any alterations are made to the tank without the prior written approval of CST Storage.

d. The CST Storage Limited Warranties shall become void and terminate if the tank is not used, operated and maintained in accordance with requirements stated in the CST Storage Operating Manual(s) supplied with the tank, or if the tank is damaged or subject to any abuse, misuse or vandalism.

e. The CST Storage Limited Warranty shall become void and terminate unless the following tank inspections are conducted by a representative(s) of a CST Storage Authorized Dealer (after liquid is first introduced into the tank) according to the schedule listed below.

1. Year One - Initial tank inspection and cathodic protection validation.
2. Year Three - Periodic cathodic protection inspection.
3. Year Six - Periodic cathodic protection inspection.
4. Year Nine - Periodic cathodic protection inspection.

It is the tank owner's responsibility to schedule the inspections listed aboveand retain the written reports of the results of the inspection(s).

Limitation of Remedies

In the event of any failure of any Aquastore brand liquid storage tank to perform as warranted in the One-Year Warranty, the sole and exclusive obligation of CST Storage shall be, at its sole option, either to repair the tank or repair or replace any part of the tank (FOB Factory) which is defective. In the event of any failure of any Aquastore brand liquid storage tank to perform as warranted in the 120-Month Warranty, the sole and exclusive obligation of CST Storage shall be, at its sole option, either to repair the tank or repair or replace any tank sheet(s) (FOB Factory) which has (have) corroded.

IN NO EVENT SHALL CST STORAGE BE LIABLE (WHETHER FOR BREACH OF WARRANTY OR CONTRACT, FOR STRICT LIABILITY OR NEGLIGENCE, OR OTHERWISE) FOR ANY SPECIAL, INCIDENTAL, PUNITIVE OR CONSEQUENTIAL DAMAGES, INCLUDING, BUT NOT LIMITED TO, DAMAGES FOR LOSS OF CONTENTS OR LOSS OF PROFITS, OR FOR THE CONDITION OR QUALITY OF LIQUID STORED IN THE TANK, OR FOR ANY INABILITY OF OWNER TO PROVIDE WATER OR SERVICE TO ANY CUSTOMER OF OWNER.

Any action against CST Storage for breach of warranty or contract, or for strict liability, negligence or otherwise relating to a tank, must be commenced within one year after such cause of action accrues.

Any Warranty claim shall be made to CST Storage in writing. Once a claim has been made, CST Storage shall have the right to perform on-site inspections of the tank. If CST Storage chooses to do repair work (which, for purposes of this paragraph, shall include repairing or replacing defective parts or corroded sheets) on the tank, CST Storage shall be granted permission to perform such work with its own service personnel or personnel of others, and under nonunion conditions unless CST Storage otherwise agrees. Any repairs made to a tank before CST Storage is notified of a claim shall be at the Owner's expense. Preparation for inspection or repair of a tank (such as removing the contents and obstructive equipment in the tank) shall be the sole responsibility and expense of Owner. Preparation of the tank for use after repair (such as sanitation of the tank and reinstallation of equipment) shall also be the sole responsibility and expense of Owner.

Disclaimers

EXCEPT FOR THE LIMITED WARRANTIES SET FORTH ABOVE, THERE ARE NO UNDERSTANDINGS, AGREEMENTS, REPRESENTATIONS OR WARRANTIES, EITHER EXPRESS OR IMPLIED, RESPECTING THE AQUASTORE BRAND LIQUID STORAGE TANK. CST STORAGE EXPRESSLY DISCLAIMS THE IMPLIED WARRANTIES OF MERCHANTABILITY AND FITNESS FOR A PARTICULAR PURPOSE.

The CST Storage Authorized Dealers are independent contractors and are not agents or employees of CST Storage. No statement by any CST Storage Authorized Dealer or any CST Storage employee shall constitute an understanding, agreement, representation or warranty by CST Storage. CST Storage makes no warranty with respect to goods manufactured by others, even if sold by a CST Storage Authorized Dealer.

These Limited Warranties and related limitations and disclaimers cannot be modified or amended by a CST Storage Authorized Dealer, and can be modified or amended only by a written document signed by an authorized CST Storage employee.

Aquastore is the registered trademark of CST Storage
© Copyright 2011 CST Storage Printed in U.S.A.
CST P/N 276306-0000 Rel. 2 ECN 11005

345 Harvestore Drive
DeKalb, Illinois 60115-9607 U.S.A.
815-756-1551 Phone, 815-756-7821 Fax

JACK LOAD ANALYSIS

MIP No.: **1409911**
Model: **31 28**

Course Being Lifted	08 Jack System Wind Velocity	06 Jack System Wind Velocity	Model 18 Jack System Wind Velocity
1	30	*	30
2	30	*	30
3	30	*	30
4	30	*	30
5	30	*	30

The values listed above indicate the maximum wind velocities (MPH) at which the designated structure course may be lifted.

CONDITIONS:

> Tank is ground supported.
> Wind speed is determined at 33 feet above the tank floor.
> A jack is positioned at each vertical seam.

Note: This information is proprietary to CST Storage and shall not be used nor reproduced without the express written consent of the Company.
All Rights Reserved 2014, CST Storage.

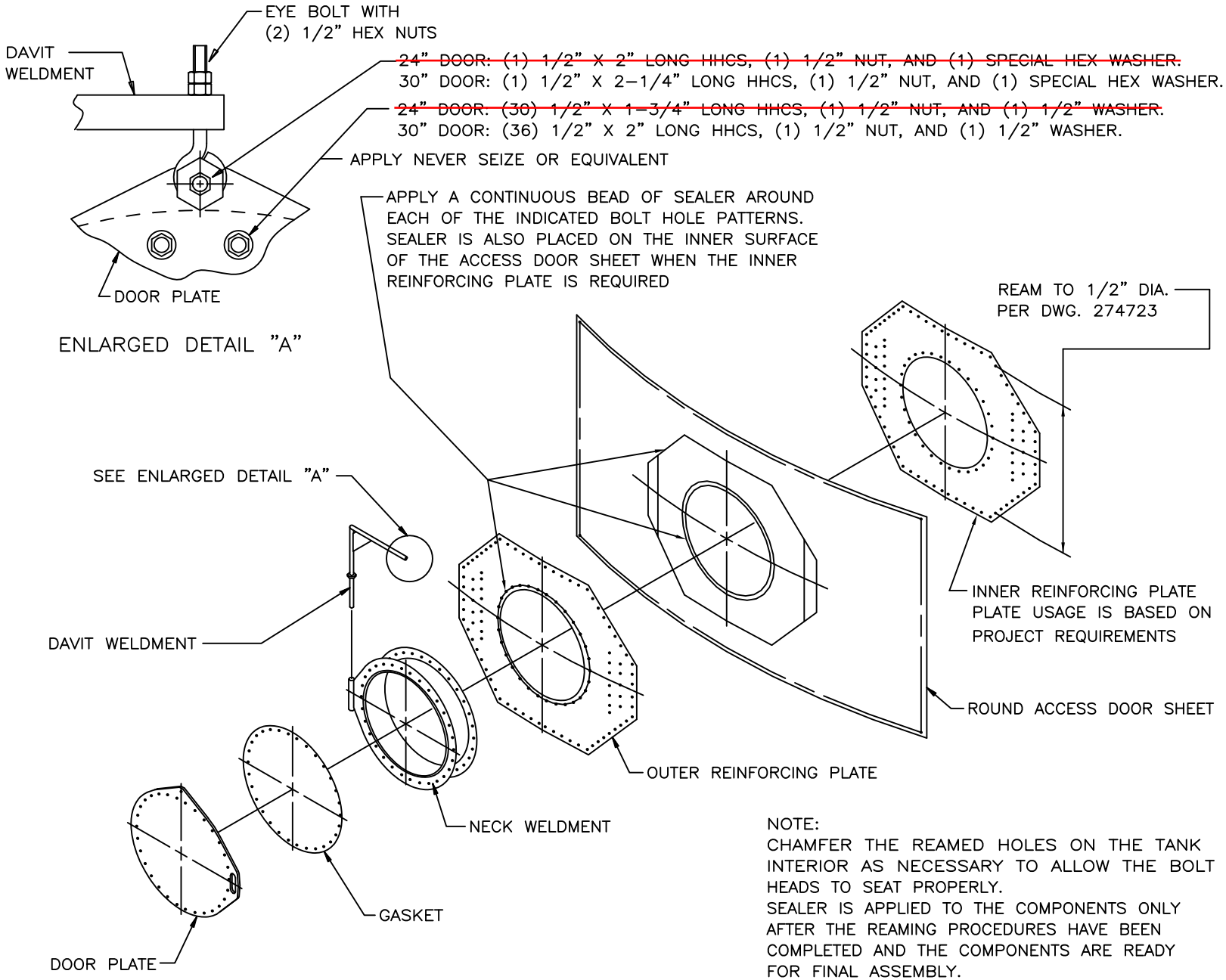

NOTE:
CHAMFER THE REAMED HOLES ON THE TANK INTERIOR AS NECESSARY TO ALLOW THE BOLT HEADS TO SEAT PROPERLY.
SEALER IS APPLIED TO THE COMPONENTS ONLY AFTER THE REAMING PROCEDURES HAVE BEEN COMPLETED AND THE COMPONENTS ARE READY FOR FINAL ASSEMBLY.
SEE DRAWING NUMBER 261337 FOR THE NECK WELDMENT TO ACCESS DOOR SHEET BOLT JOINT.

REL	DESCRIPTION	DR. BY
1	RELEASED FOR PRODUCTION	90034 RKK
2	REVISED COPYRIGHT STATEMENT	91149 DMN
3	REVISED DETAIL "A" TO REFLECT 1/2" EYE BOLT; ADDED 30" DOOR INFORMATION; REMOVED FINISH AND MATERIAL NOTES.	97297 5/12/97 DMA/RKK
4	REMOVED BUSHING PROCEDURE; ADDED REAMING PROCEDURE	00006 01/13/00 TAK/TAK
5	ADDED NEVER SEIZE NOTE	01172 10/23/01 TAK/TAK
6	REVISED COPYRIGHT STATEMENT; REDREW 1/2" HOLES ADDED BLACK STEEL	07314 10/01/07 MMB/DRT
7	REVISED REAMING PROCEDURE	08042 2/20/08 MMB/DRT

To Index

ENGINEERED STORAGE PRODUCTS COMPANY
DEKALB, ILLINOIS 60115

CONFIDENTIAL

THIS DRAWING IS THE PROPRIETARY PROPERTY OF ENGINEERED STORAGE PRODUCTS COMPANY AND SHALL NOT BE USED NOR REPRODUCED WITHOUT THE EXPRESS WRITTEN CONSENT OF THE COMPANY.
ESPC COPYRIGHT ©2008
ALL RIGHTS RESERVED

DRAWN BY DMN
DATE 08/19/91

CONSTRUCTION DETAIL ~~24~~" AND 30" ROUND ACCESS DOORS (W/ DAVIT) INSTALLATION GLASS COATED + BLACK STEEL TANKS

DRWG NO. 261335

To Index

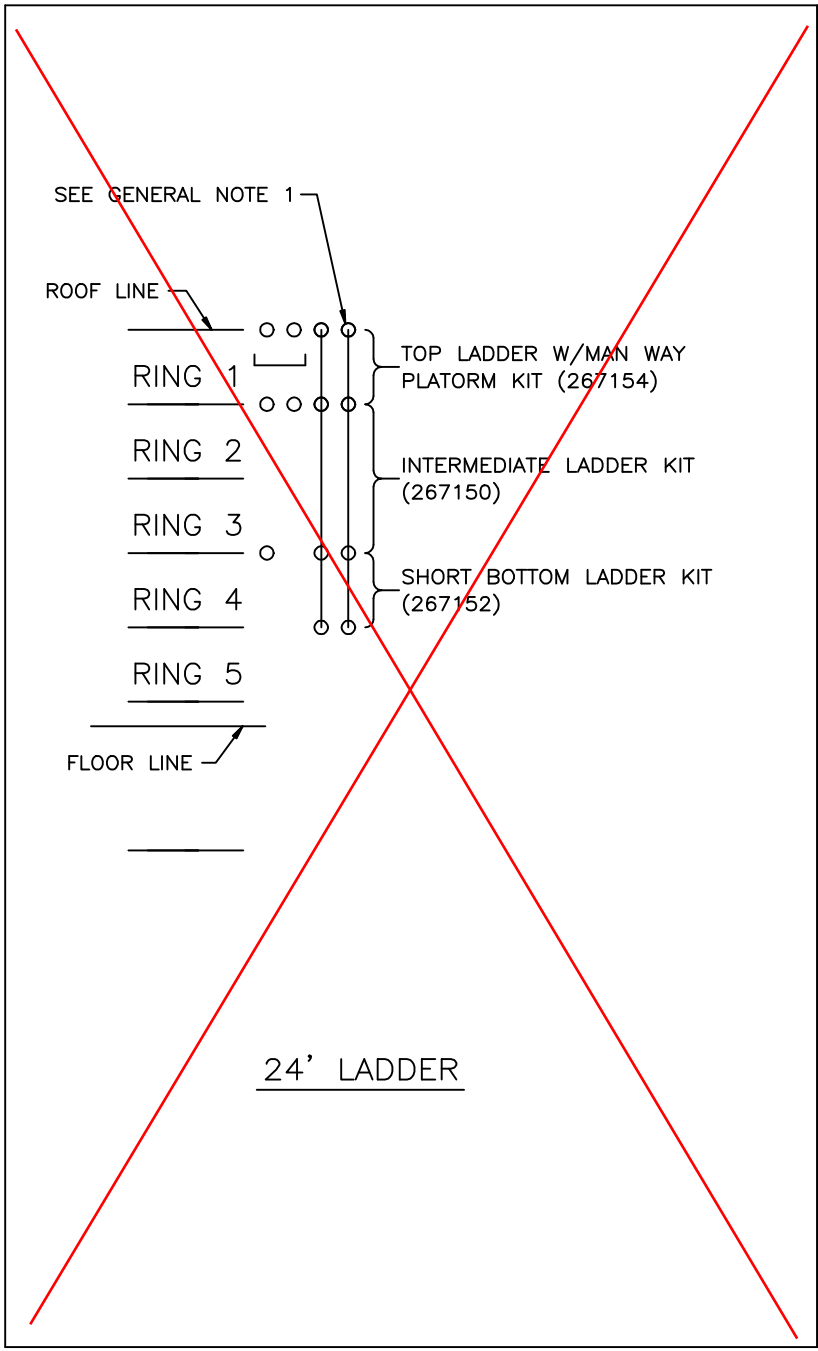

24' LADDER

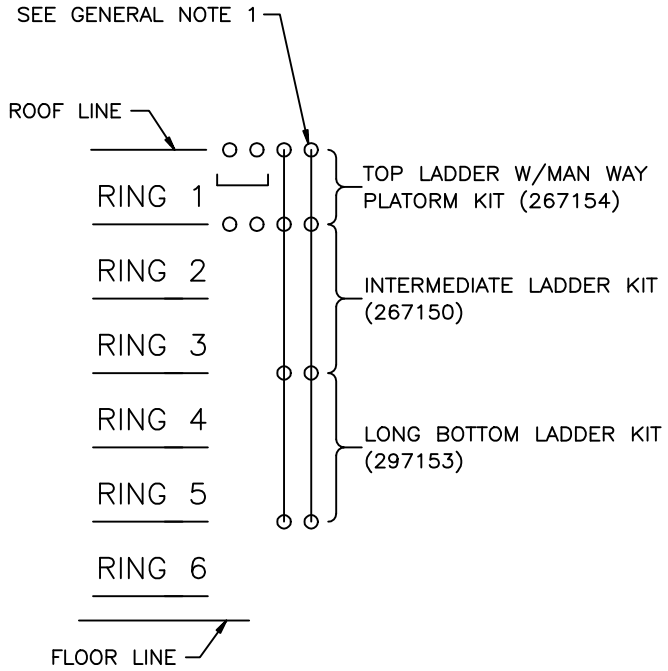

28' LADDER

REL	DESCRIPTION	ECN DR. BY
1	RELEASED FOR PRODUCTION	96108 04/09/96 MCA/RKK
2	UPDATED CONSTRUCTION DWG PART NUMBERS	03100 06/10/03 DRT/ TAK

GENERAL NOTES:
1. BRACKET TYPES ARE SPECIFIED IN THE PROJECT SUBMITTAL DOCUMENTATION.
2. SEE CONSTRUCTION DETAIL DRAWING PART NUMBERS INDICATED FOR DETAILED ASSEMBLY OF EACH LADDER SECTION, WITH SAFETY CAGE.

THIS DRAWING IS NOT TO SCALE.
ALL DIMENSIONS ARE REFERENCE ALLOWING ACCEPTABLE FIELD TOLERANCES TO APPLY.

ENGINEERED STORAGE PRODUCTS COMPANY
DEKALB, ILLINOIS 60115

CONFIDENTIAL
THIS DRAWING IS THE PROPRIETARY PROPERTY OF ENGINEERED STORAGE PRODUCTS COMPANY AND SHALL NOT BE USED NOR REPRODUCED WITHOUT THE EXPRESS WRITTEN CONSENT OF THE COMPANY.
ESPC COPYRIGHT © 2003
ALL RIGHTS RESERVED

DRAWN BY MCA
DATE 04/09/96

CONSTRUCTION DETAIL LADDER AND PLATFORM SCHEMATIC

~~24'~~ AND 28'
NOM. TANK HEIGHT
WATER TANKS

DRWG NO. 264544

To Index

GENERAL NOTES:
1. ALL STEEL COMPONENTS ARE HOT DIP GALVANIZED.
2. FASTEN COMPONENTS TOGETHER USING 3/8" DIA. STAINLESS STEEL HEX HD CAP SCREW SETS. (SETS INCLUDE ITEMS #5, 6, 7, AND 8)
   FASTENER USAGE FOR ASSEMBLY OF THIS SECTION IS AS FOLLOWS:
   SET OF 3/8" X 1" LONG (ITEMS #5, 7, AND 8) AT (37) JOINTS.
   SET OF 3/8" X 1-1/4" LONG (ITEM #6, 7, AND 8) AT (1) JOINT.
3. SHORT "Y" LADDER BRACKET ASSEMBLIES ARE SHOWN FOR REFERENCE ONLY. POSITION OF THE BRACKETS TO BE DETERMINED DURING INSTALLATION. SEE PROJECT SUBMITTAL DOCUMENTATION FOR BRACKET TYPE AND QUANTITY REQUIREMENTS.

   ANY ONE OF THE LADDER SECTIONS ILLUSTRATED ON THE FOLLOWING CONSTRUCTION DETAIL DRAWINGS:
   267147 LADDER SECTION – TOP
   267149 LADDER AND PLATFORM SECTION – OPEN TOP
   267154 LADDER AND MANWAY PLATFORM SECTION
   267150 LADDER SECTION – INTERMEDIATE

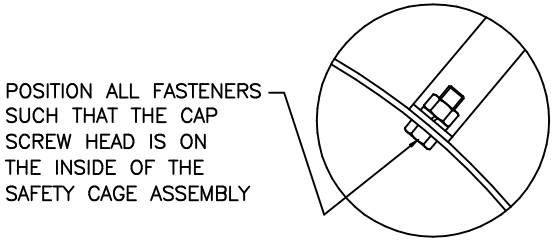

DETAIL "A"

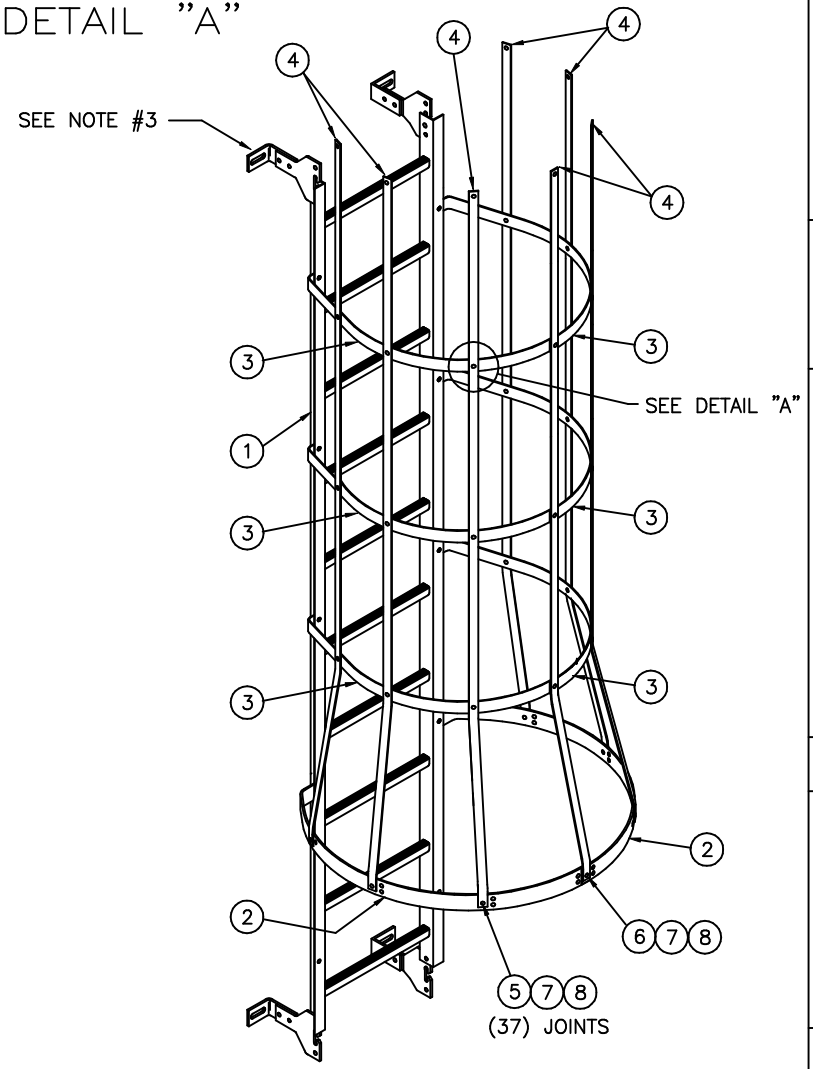

ITEM	DESCRIPTION	QTY
8	NUT, HEX, 3/8"	38
7	WASHER, LOCK, 3/8"	38
6	SCREW, HEX HD CAP, 3/8" x 1 1/4"	1
5	SCREW, HEX HD CAP, 3/8" x 1"	37
4	STRINGER, 1/8" x 1" x 89"	7
3	CAGE RING HALF, 1/8" x 1-1/2" x 13-1/2" R.	6
2	CAGE RING HALF, 3/16" x 3" x 17-1/2" R.	2
1	LADDER ASSEMBLY, INTERMEDIATE	1
--	LONG BOTTOM LADDER & SAFETY CAGE KIT	--

REL	DESCRIPTION	ECN DR. BY
1	RELEASED	03030 02/19/03 DRT/TAK

ENGINEERED STORAGE PRODUCTS COMPANY
DEKALB, ILLINOIS 60115

CONFIDENTIAL
THIS DRAWING IS THE PROPRIETARY PROPERTY OF ENGINEERED STORAGE PRODUCTS COMPANY AND SHALL NOT BE USED NOR REPRODUCED WITHOUT THE EXPRESS WRITTEN CONSENT OF THE COMPANY.
ESPC COPYRIGHT © 2003
ALL RIGHTS RESERVED

DRAWN BY DRT
DATE 02/19/03

CONSTRUCTION DETAIL LADDER SECTION LONG BOTTOM WITH SAFETY CAGE

ALL TANK TYPES

DRWG NO. 267153

To Index

GENERAL NOTES:
1. ALL STEEL COMPONENTS ARE HOT DIP GALVANIZED.
2. FASTEN COMPONENTS TOGETHER USING 3/8" DIA. STAINLESS STEEL HEX HD CAP SCREW SETS. (SETS INCLUDE ITEMS #5, 6, 7, AND 8) FASTENER USAGE FOR ASSEMBLY OF THIS SECTION IS AS FOLLOWS:
   SET OF 3/8" X 1" LONG (ITEMS #5, 7, AND 8) AT (43) JOINTS.
   SET OF 3/8" X 1-1/4" LONG (ITEM #6, 7, AND 8) AT (2) JOINTS.
3. SHORT "Y" LADDER BRACKET ASSEMBLIES ARE SHOWN FOR REFERENCE ONLY. POSITION OF THE BRACKETS TO BE DETERMINED DURING INSTALLATION. SEE PROJECT SUBMITTAL DOCUMENTATION FOR BRACKET TYPE AND QUANTITY REQUIREMENTS.
4. THIS LADDER SECTION IS CONNECTED AT THE TOP TO ANY ONE OF THE LADDER SECTIONS ILLUSTRATED ON THE FOLLOWING CONSTRUCTION DETAIL DRAWINGS:
   267147 LADDER SECTION – TOP
   267149 LADDER AND PLATFORM SECTION – OPEN TOP
   267154 LADDER AND MANWAY PLATFORM SECTION
   267155 LADDER AND STEP-OFF PLATFORM SECTION
   267153 LADDER SECTION – LONG BOTTOM
   267152 LADDER SECTION – SHORT BOTTOM

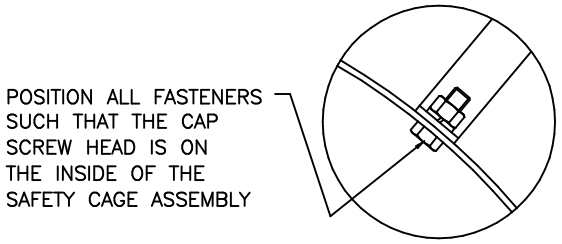

DETAIL "A"

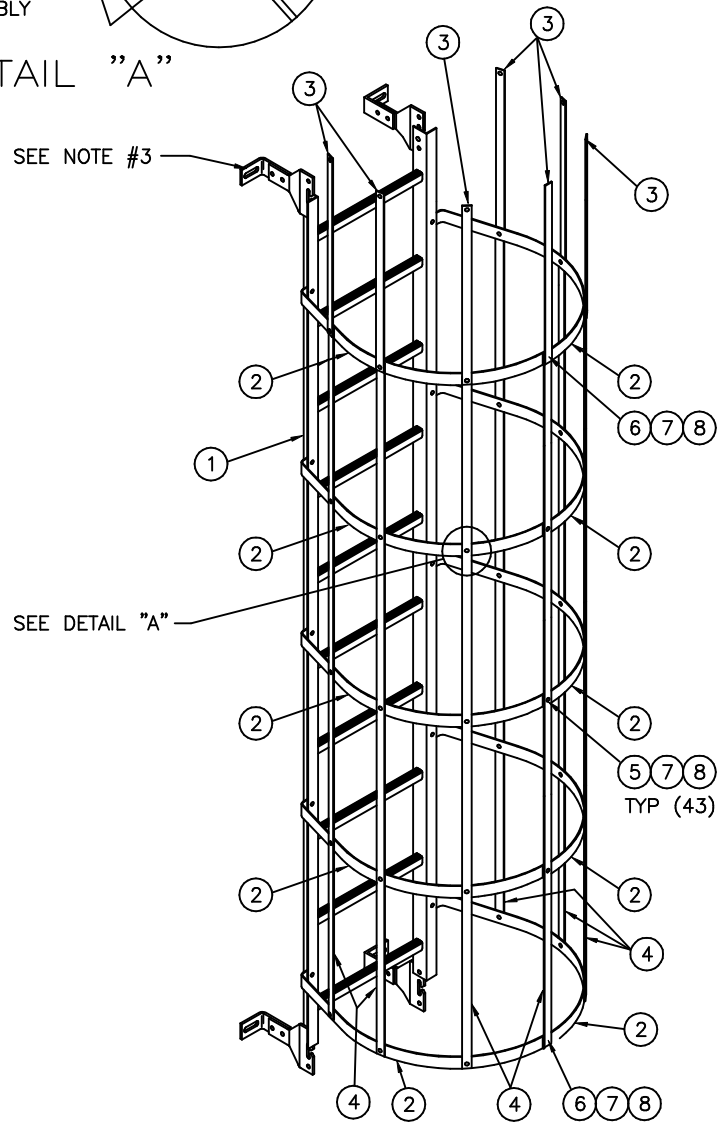

ITEM	DESCRIPTION	QTY
--	INTERMEDIATE LADDER & SAFETY CAGE KIT	--
1	LADDER ASSEMBLY, INTERMEDIATE	1
2	CAGE RING HALF, 3/16" x 1-1/2" x 13-1/2" R.	10
3	STRINGER, 1/8" x 1" x 23"	7
4	STRINGER, 1/8" x 1" x 89"	7
5	SCREW, HEX HD CAP, 3/8" x 1"	43
6	SCREW, HEX HD CAP, 3/8" x 1 1/4"	2
7	WASHER, LOCK, 3/8"	45
8	NUT, HEX, 3/8"	45

REL	DESCRIPTION	ECN DR. BY
1	RELEASED	03030 02/19/03 DRT/TAK

ENGINEERED STORAGE PRODUCTS COMPANY
DEKALB, ILLINOIS 60115

CONFIDENTIAL
THIS DRAWING IS THE PROPRIETARY PROPERTY OF ENGINEERED STORAGE PRODUCTS COMPANY AND SHALL NOT BE USED NOR REPRODUCED WITHOUT THE EXPRESS WRITTEN CONSENT OF THE COMPANY.
ESPC COPYRIGHT © 2003
ALL RIGHTS RESERVED

DRAWN BY DRT
DATE 02/19/03

CONSTRUCTION DETAIL
LADDER SECTION
INTERMEDIATE
WITH SAFETY CAGE

ALL TANK TYPES

DRWG NO. 267150

GENERAL NOTES:

1. ALL STEEL COMPONENTS ARE HOT DIP GALVANIZED.
2. FASTEN COMPONENTS TOGETHER USING 3/8" DIA. STAINLESS STEEL HEX HD CAP SCREW SETS. (SETS INCLUDE ITEMS #9, 10, 11, 12, AND 13) FASTENER USAGE FOR ASSEMBLY OF THIS SECTION IS AS FOLLOWS:
   SET OF 3/8" X 1" LONG (ITEMS #9, 11, 12, AND 13) AT (27) JOINTS.
   SET OF 3/8" X 1–1/4" LONG (ITEM #10, 11, 12, AND 13) AT (4) JOINT.
3. POSITION OF THE PLATFORM BRACKETS TO BE DETERMINED DURING INSTALLATION. SEE PROJECT SUBMITTAL DOCUMENTATION FOR BRACKET TYPE AND QUANTITY REQUIREMENTS.
4. ATTACH (2) CHAIN ASSEMBLIES (ITEM #8) AT THE OPEN SIDE OF THE PLATFORM USING THE FOLLOWING FASTENERS AT EACH CHAIN ASSEMBLY LOCATION:
   (1) SET 3/8" x 1" LG HHCS (ITEMS #9, 11, 12, & 13)
   (1) SET 3/8" DIA. EYE BOLT (ITEMS #7, 11, 12, & 13)
5. THIS LADDER SECTION IS CONNECTED AT THE BOTTOM TO ANY ONE OF THE LADDER SECTIONS ILLUSTRATED ON THE FOLLOWING CONSTRUCTION DETAIL DRAWINGS:
   267150 LADDER SECTION – INTERMEDIATE
   △2 267153 LADDER SECTION – LONG BOTTOM
   267152 LADDER SECTION – SHORT BOTTOM
6. LEFT HAND PLATFORM MOUNT IS SHOWN. DEPENDENT ON SITE REQUIREMENTS, THE PLATFORM MAY BE MOUNTED ON THE RIGHT HAND SIDE OF THE LADDER.

ITEM	DESCRIPTION	QTY
16	STRINGER, 1/8" x 1" x 23"	2
15	CAGE BAND, 1/8" x 1–1/2" x 11"	1
14	CAGE BAND, 1/8" x 1–1/2" x 22–1/2"	3
13	WASHER, FLAT, 3/8"	37
12	NUT, HEX, 3/8"	35
11	WASHER, LOCK, 3/8"	33
10	SCREW, HEX HD CAP, 3/8" x 1–1/4"	4
9	SCREW, HEX HD CAP, 3/8" x 1"	27
8	CHAIN ASSEMBLY	2
7	EYE BOLT, 3/8"	2
6	STRAP, 1/8" x 2" x 30–1/8"	2
5	RAIL, 2" x 2" x 1/8" x 30–1/8"	2
4	GUSSET ANGLE, 2" x 2" x 1/8" x 33–1/8"	2
3	PLATFORM, 30" x 30"	1
2	POST, 2" x 2" x 1/8" x 50–1/4"	2
1	MOUNTING ANGLE, 3" x 3" x 1/4" x 85"	2
--	MANWAY PLATFORM KIT	--

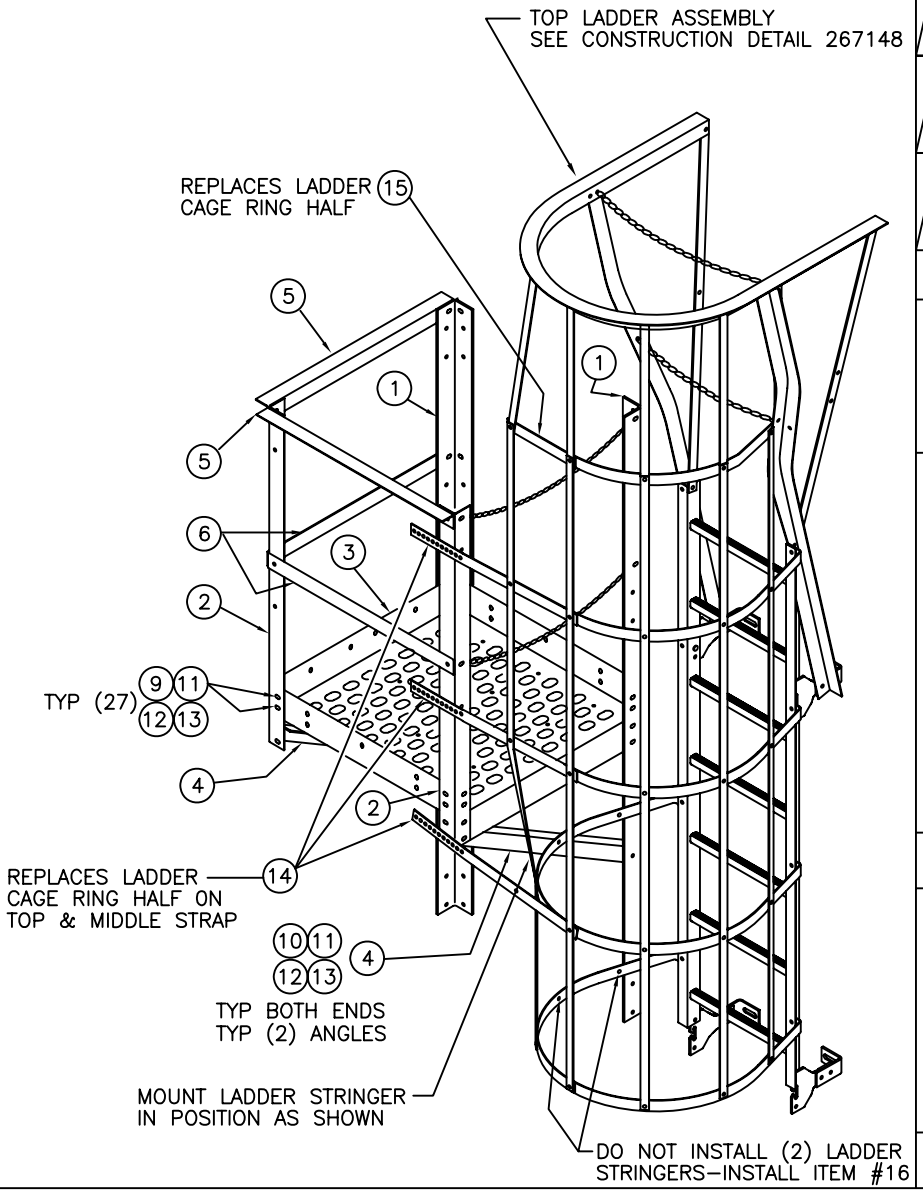

REL	DESCRIPTION	DR. BY
1	RELEASED	03030 02/19/03 DRT/TAK
2	REVISED CONSTR. DRAWING P/N'S	03100 06/13/03 DRT/TAK
3	ADDED CHAIN ASSY'S TO GRAPHIC	05031 02/24/05 DRT/TAK
4	RELOCATED CHAIN ASSY'S TO KING POSTS	06090 04/27/06 DRT/

TechIndex

ENGINEERED STORAGE PRODUCTS COMPANY

DEKALB, ILLINOIS 60115

CONFIDENTIAL

THIS DRAWING IS THE PROPRIETARY PROPERTY OF ENGINEERED STORAGE PRODUCTS COMPANY AND SHALL NOT BE USED NOR REPRODUCED WITHOUT THE EXPRESS WRITTEN CONSENT OF THE COMPANY.

ESPC COPYRIGHT © 2006
ALL RIGHTS RESERVED

DRAWN BY DRT
DATE 02/19/03

CONSTRUCTION DETAIL MANWAY PLATFORM AND TOP LADDER WITH SAFETY CAGE

TANK WITH ROOF

DRWG NO. 267154

To Index

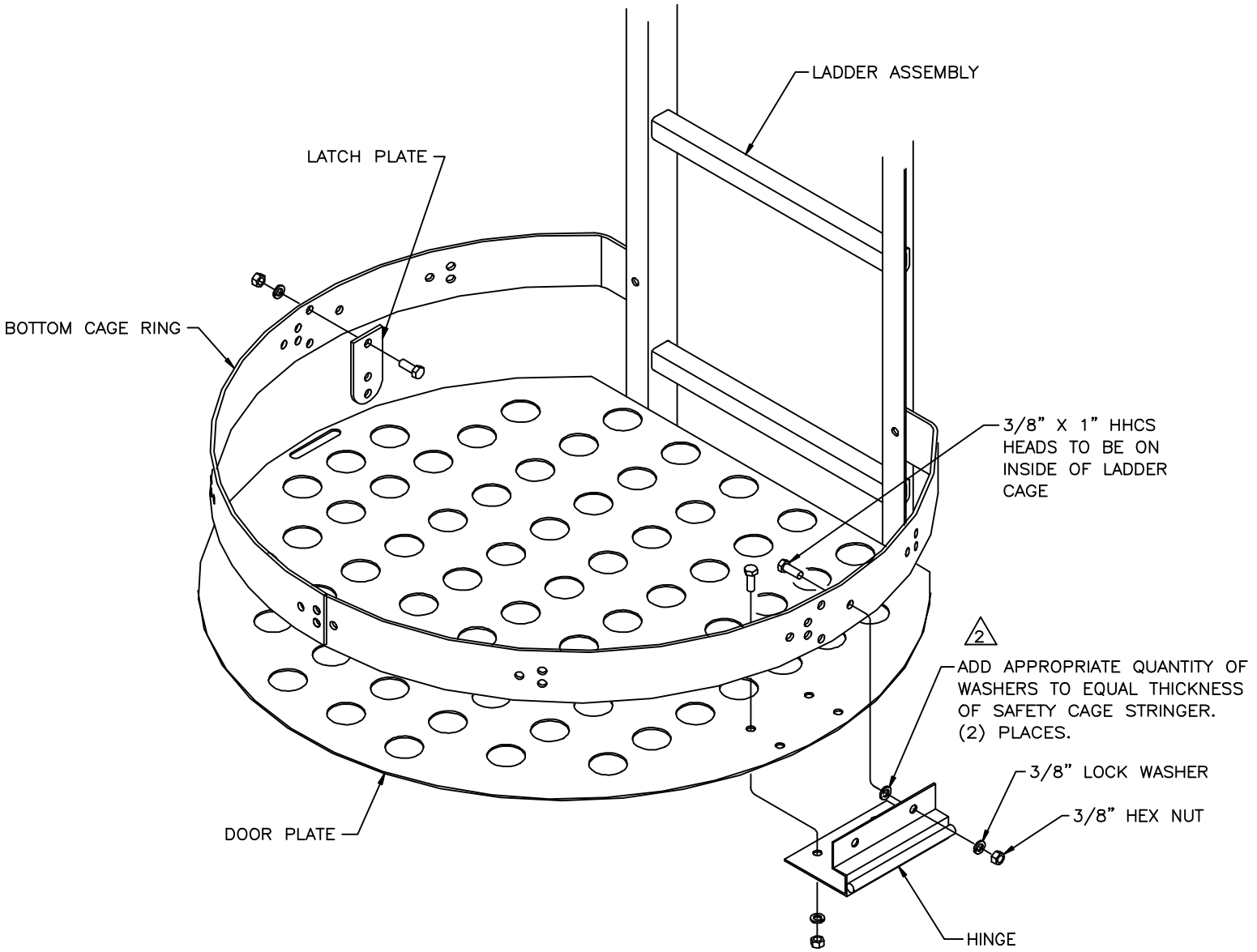

REL	DESCRIPTION	ECN DR. BY
1	RELEASED FOR PRODUCTION	96143 05/03/96 TAK/RKK
2	ADDED "WASHERS" NOTE	96371 12/6/96 DMA/RKK

THIS DRAWING IS NOT TO SCALE.
ALL DIMENSIONS ARE REFERENCE ALLOWING ACCEPTABLE FIELD TOLERANCES TO APPLY.

A.O. SMITH
ENGINEERED STORAGE PRODUCTS COMPANY
DEKALB, ILLINOIS 60115

CONFIDENTIAL
THIS DRAWING IS THE PROPRIETARY PROPERTY OF A.O. SMITH ENGINEERED STORAGE PRODUCTS COMPANY AND SHALL NOT BE USED NOR REPRODUCED WITHOUT THE EXPRESS WRITTEN CONSENT OF THE COMPANY.
AOSESPC COPYRIGHT © 1998
ALL RIGHTS RESERVED

DRAWN BY	TAK
DATE	05/03/96

CONSTRUCTION DETAIL LADDER DOOR ASSEMBLY INSTALLATION

LADDER ASSEMBLIES

DRWG NO. 264773

To Index

THE STRUCTURE BOLT LENGTHS AND QUANTITIES FOR THIS CONSTRUCTION DETAIL DO NOT CONSIDER THE MOUNTING OF THE GUARD RAIL AND WALKWAY, ROOF MANWAY, VENTILATOR AND INSPECTION EQUIPMENT TO THE ROOF ASSEMBLY. SEE THE FOLLOWING CONSTRUCTION DETAIL DRAWINGS FOR THE STRUCTURE BOLT LENGTH AND QUANTITY REQUIREMENTS FOR INSTALLATION OF THESE APPURTENANCES.

DRWG. NO.	CONSTRUCTION DETAIL
261307	GRAVITY VENTILATOR INSTALLATION
263938	ROOF MANWAY INSTALLATION
261892	ROOF GUARD RAIL INSTALLATION
261893	ROOF GUARD RAIL INSTALLATION
261894	ROOF GUARD RAIL INSTALLATION
261895	ROOF GUARD RAIL INSTALLATION
263043	INSPECTION EQUIPMENT
270197	FALL PROTECTION BRACKET INSTALLATION

* OPTIONAL APPURTENANCES
** AS REQUIRED EQUIPMENT

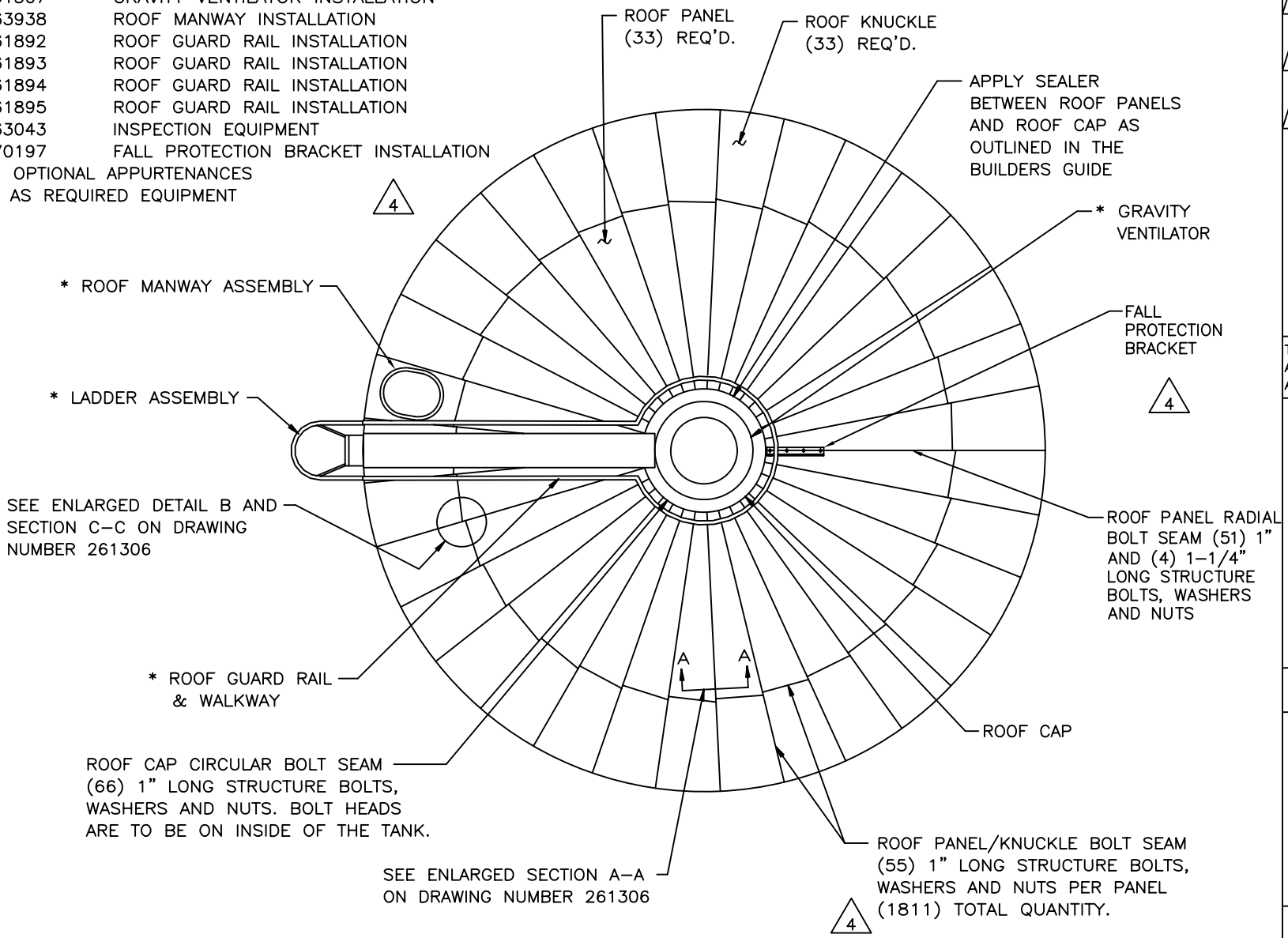

REL	DESCRIPTION	ECN DR. BY
1	RELEASED FOR PRODUCTION	95182 TAK/RKK
2	REVISED INSPECTION EQUIPMENT TO BE AN OPTIONAL APPURTENANCE	00098 TAK/TAK
3	REMOVED INSPECTION EQUIPMENT PER CUSTOMER REQUEST	05136 CGG/MEK
4	ADDED FALL PROTECTION BRACKET	06137 NBE

THIS DRAWING IS NOT TO SCALE. ALL DIMENSIONS ARE REFERENCE IN THAT ACCEPTABLE FIELD TOLERANCES APPLY.

ENGINEERED STORAGE PRODUCTS COMPANY
DEKALB, ILLINOIS 60115

CONFIDENTIAL
THIS DRAWING IS THE PROPRIETARY PROPERTY OF ENGINEERED STORAGE PRODUCTS COMPANY AND SHALL NOT BE USED NOR REPRODUCED WITHOUT THE EXPRESS WRITTEN CONSENT OF THE COMPANY.
ESPC COPYRIGHT © 2003
ALL RIGHTS RESERVED

DRAWN BY TAK
DATE 08/22/95

CONSTRUCTION DETAIL ROOF ASSEMBLY

20° SLOPED ROOF 31' DIAMETER

DRWG NO. 263937

To Index

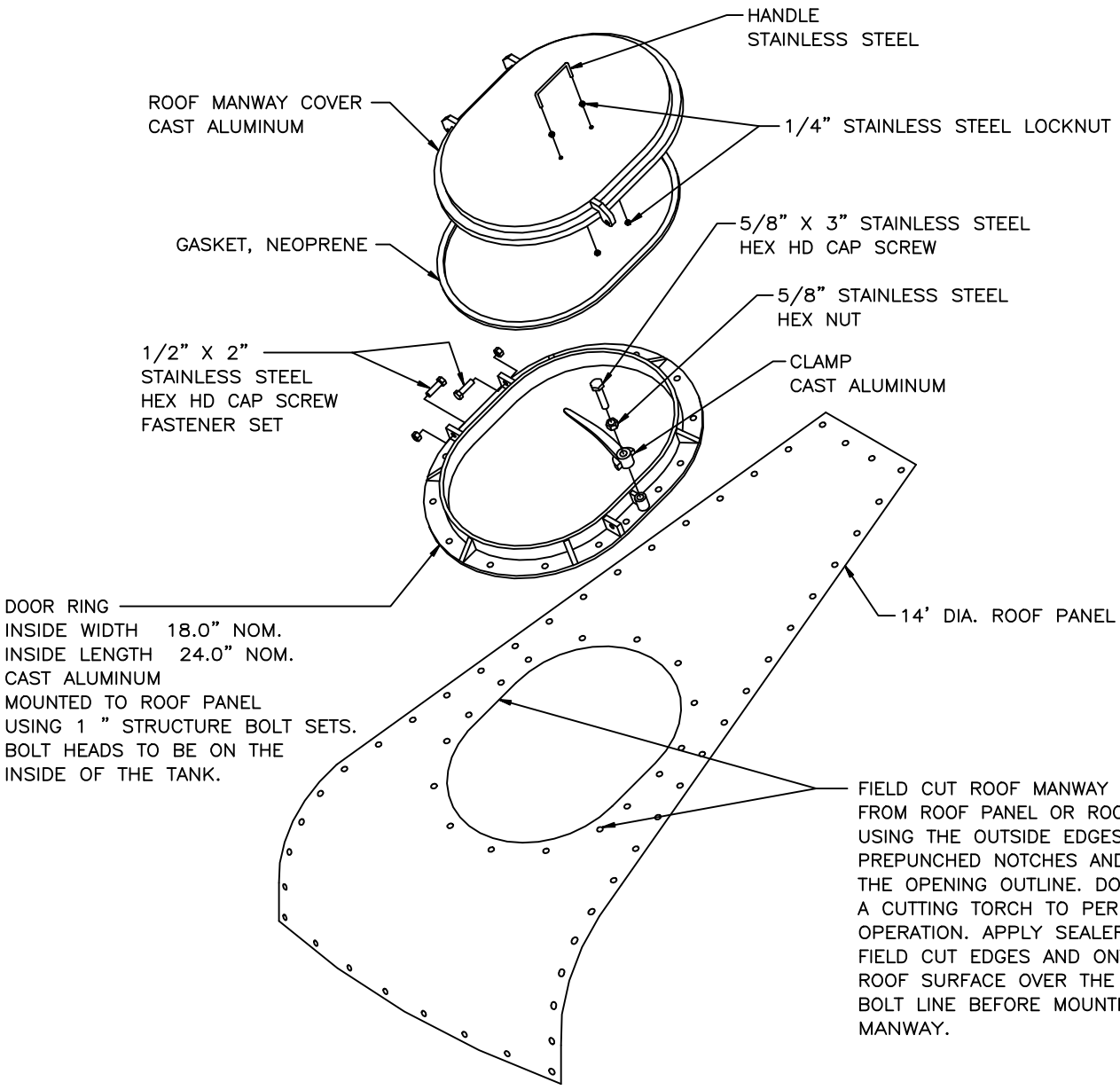

REL	DESCRIPTION	ECN DR. BY
1	RELEASED FOR PRODUCTION	95182 TAK/RKK
2	REVISED FASTENER LENGTH & GRAPHICS	95256 TAK/RKK
3	ADDED 34' & 36' DIA. ROOF APPLICATIONS	02048 03/22/02 TAK/TAK
4	ADDED 39' – 53' DIA. ROOF APPLICATIONS	02121 08/22/02 TAK/TAK
5	REMOVED 34' – 53' DIA. ROOF APPLICATIONS	03114 07/22/03 TAK/TAK

THIS DRAWING IS NOT TO SCALE.
ALL DIMENSIONS ARE REFERENCE ALLOWING ACCEPTABLE FIELD TOLERANCES TO APPLY.

ENGINEERED STORAGE PRODUCTS COMPANY
DEKALB, ILLINOIS 60115

CONFIDENTIAL
THIS DRAWING IS THE PROPRIETARY PROPERTY OF ENGINEERED STORAGE PRODUCTS COMPANY AND SHALL NOT BE USED NOR REPRODUCED WITHOUT THE EXPRESS WRITTEN CONSENT OF THE COMPANY.
ESPC COPYRIGHT © 2002
ALL RIGHTS RESERVED

DRAWN BY TAK
DATE 08/22/95

CONSTRUCTION DETAIL ROOF MANWAY INSTALLATION ONTO ROOF PANEL 20° SLOPED ROOF 14' THRU 31' DIA.

DRWG NO. 263938

To Index

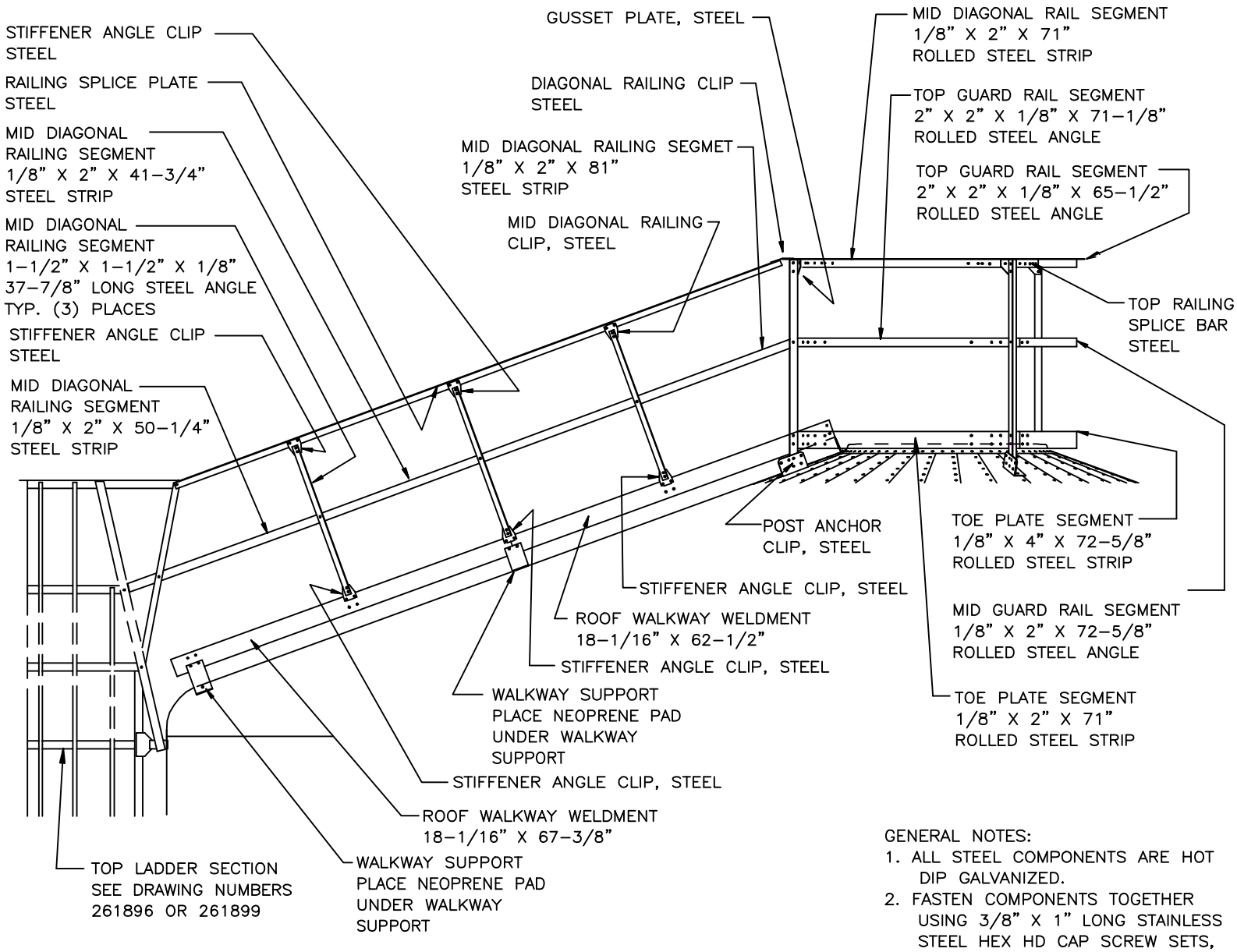

GENERAL NOTES:
1. ALL STEEL COMPONENTS ARE HOT DIP GALVANIZED.
2. FASTEN COMPONENTS TOGETHER USING 3/8" X 1" LONG STAINLESS STEEL HEX HD CAP SCREW SETS, UNLESS OTHERWISE SPECIFIED.

REL	DESCRIPTION	ECN DR. BY
1	RELEASED FOR PRODUCTION	90034 DMN
2	REVISED COPYRIGHT STATEMENT; ADDED TOP LADDER REF. DRWG. P/N'S; AND FASTENER SPECS. TO GENERAL NOTES; RELOCATED ASSOC. DOC'S. NOTE	91149 DMN

ASSOCIATED DOCUMENTS:
261893 PLAN VIEW
261894 DETAILS "A" & "B"
261895 DETAILS "C" & "D"

A.O. SMITH
ENGINEERED STORAGE PRODUCTS COMPANY
DEKALB, ILLINOIS 60115

CONFIDENTIAL
THIS DRAWING IS THE PROPRIETARY PROPERTY OF A.O. SMITH ENGINEERED STORAGE PRODUCTS COMPANY AND SHALL NOT BE USED NOR REPRODUCED WITHOUT THE EXPRESS WRITTEN CONSENT OF THE COMPANY.
AOSESPC COPYRIGHT © 1998
ALL RIGHTS RESERVED

DRAWN BY DMN
DATE 4/90

CONSTRUCTION DETAIL ROOF GUARD RAIL ASSEMBLY

31' DIAMETER ELEVATION VIEW

DRWG NO. 261892

To Index

NOTE:
APPLY SEALER BETWEEN ALL GUARD RAIL MOUNTING BRACKETS AND ROOF PANELS AS OUTLINED IN THE BUILDERS GUIDE.

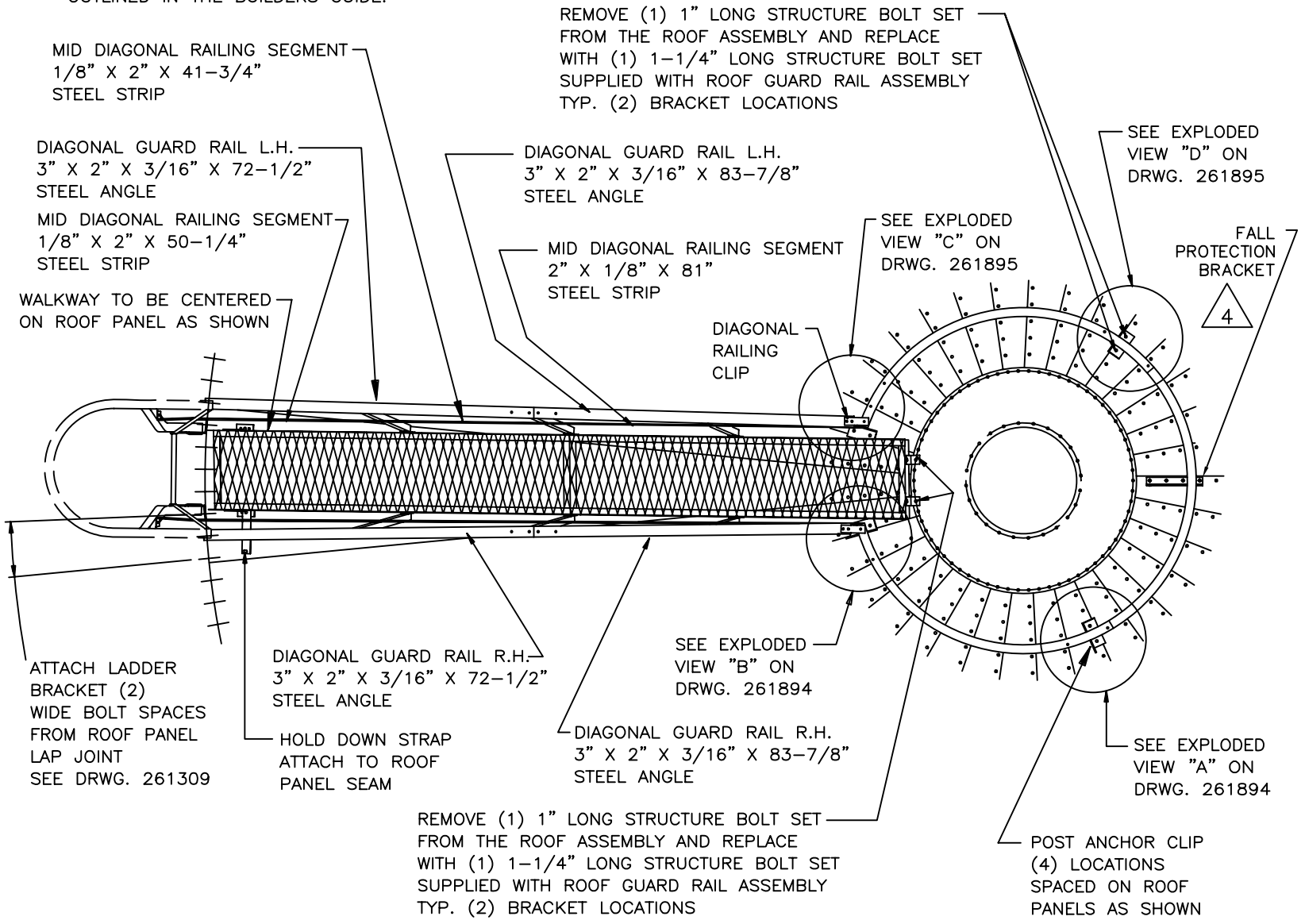

REL	DESCRIPTION	ECN DR. BY
1	RELEASED FOR PRODUCTION	90034 DMN
2	REVISED COPYRIGHT STATEMENT; AND RELOCATED ASSOC. DOC'S. NOTE; ADDED WALKWAY NOTE; CORRECTED VIEW "C" DRAWING NO.	91149 DMN
3	REVISED DIAGONAL GUARD DIMENSIONS	00082 JTF/TAK
4	ADDED FALL PROTECTION BRACKET	06137 NBE 06/08/06

ASSOCIATED DOCUMENTS:
261892 ELEVATION VIEW
261894 DETAILS "A" & "B"
261895 DETAILS "C" & "D"

ENGINEERED STORAGE PRODUCTS COMPANY
DEKALB, ILLINOIS 60115

CONFIDENTIAL
THIS DRAWING IS THE PROPRIETARY PROPERTY OF ENGINEERED STORAGE PRODUCTS COMPANY AND SHALL NOT BE USED NOR REPRODUCED WITHOUT THE EXPRESS WRITTEN CONSENT OF THE COMPANY.
ESPC COPYRIGHT © 2003
ALL RIGHTS RESERVED

DRAWN BY DMN
DATE 4/90

CONSTRUCTION DETAIL ROOF GUARD RAIL ASSEMBLY

31' DIAMETER PLAN VIEW

DRWG NO. 261893

To Index

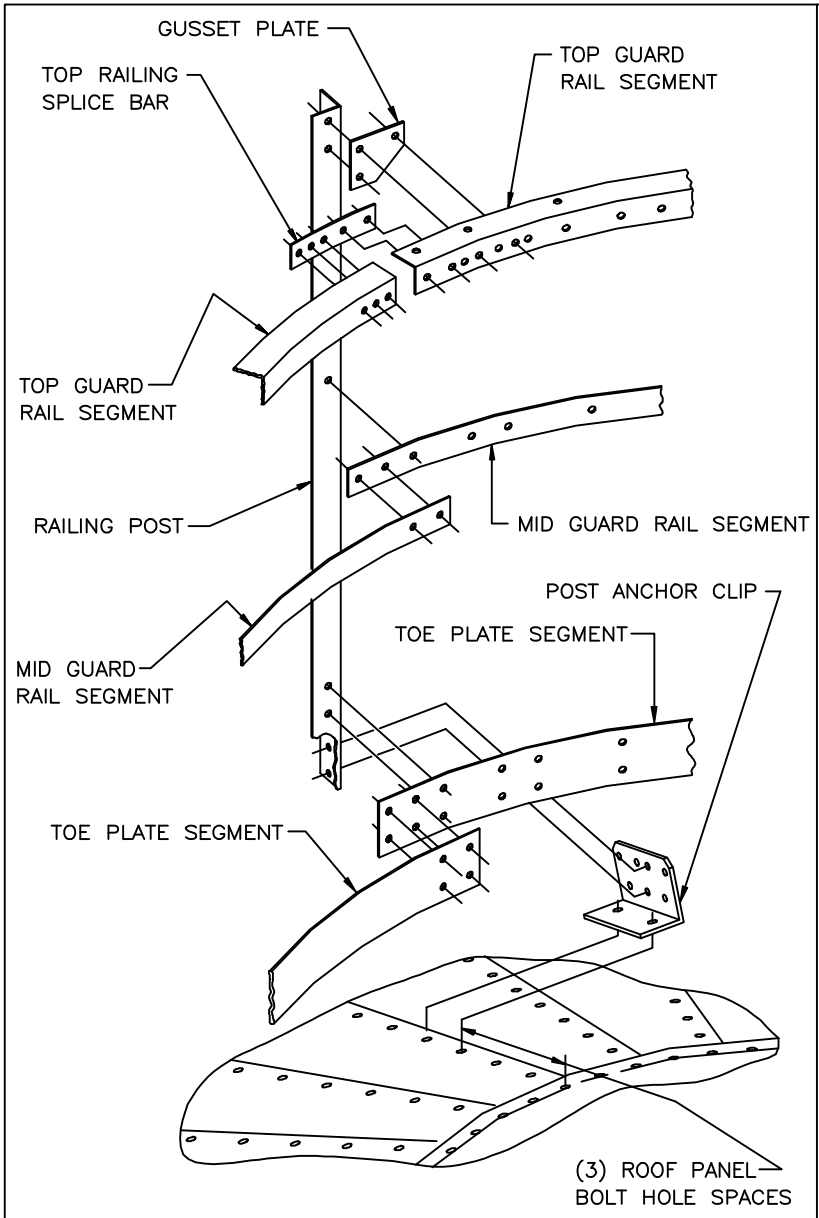

VIEW "A"
RAILING POST EXPLODED VIEW
AS VIEWED FROM INSIDE GUARD RAIL ASSEMBLY

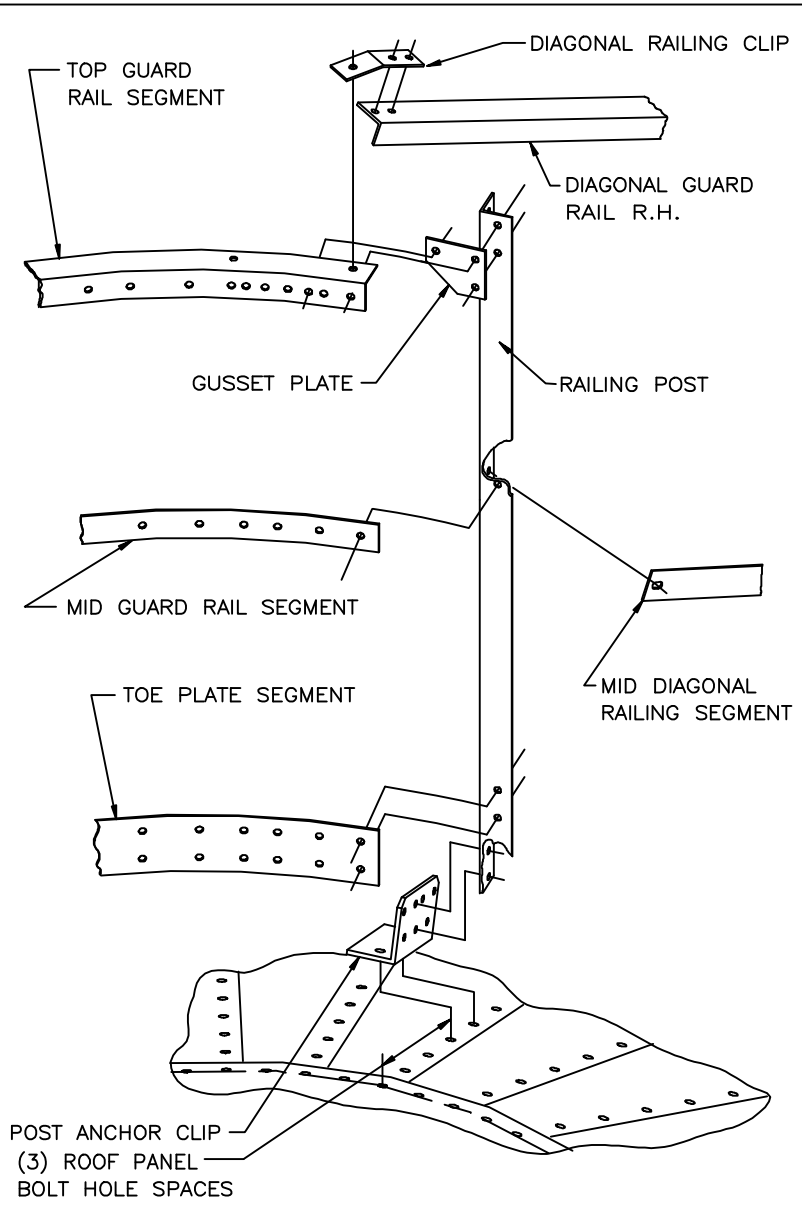

VIEW "B"
RAILING POST EXPLODED VIEW
AS VIEWED FROM INSIDE GUARD RAIL ASSEMBLY

REL	DESCRIPTION	ECN DR. BY
1	RELEASED FOR PRODUCTION	90034 DMN
2	REVISED COPYRIGHT STATEMENT; AND ADDED ASSOCIATED DOCUMENTS NOTE	91149 DMN
3	REMOVED MID DIAGONAL RAILING CLIP FROM VIEW "B".	94205 MCA
4	REVISED DIAGONAL GUARD DESCRIPTION	00082 JTF/TAK
5	CORRECTED POSITION OF POST ANCHOR CLIP IN VIEW "A"	01011 TAK / TAK

ASSOCIATED DOCUMENTS:
261892 ELEVATION VIEW
261893 PLAN VIEW
261895 DETAILS "C" & "D"

A.O. SMITH
ENGINEERED STORAGE PRODUCTS COMPANY
DEKALB, ILLINOIS 60115

CONFIDENTIAL
THIS DRAWING IS THE PROPRIETARY PROPERTY OF A.O. SMITH ENGINEERED STORAGE PRODUCTS COMPANY AND SHALL NOT BE USED NOR REPRODUCED WITHOUT THE EXPRESS WRITTEN CONSENT OF THE COMPANY.
AOSESPC COPYRIGHT © 1998
ALL RIGHTS RESERVED

DRAWN BY DMN
DATE 4/90

CONSTRUCTION DETAIL ROOF GUARD RAIL ASSEMBLY

31' DIAMETER VIEWS "A" AND "B"

DRWG NO. 261894

To Index

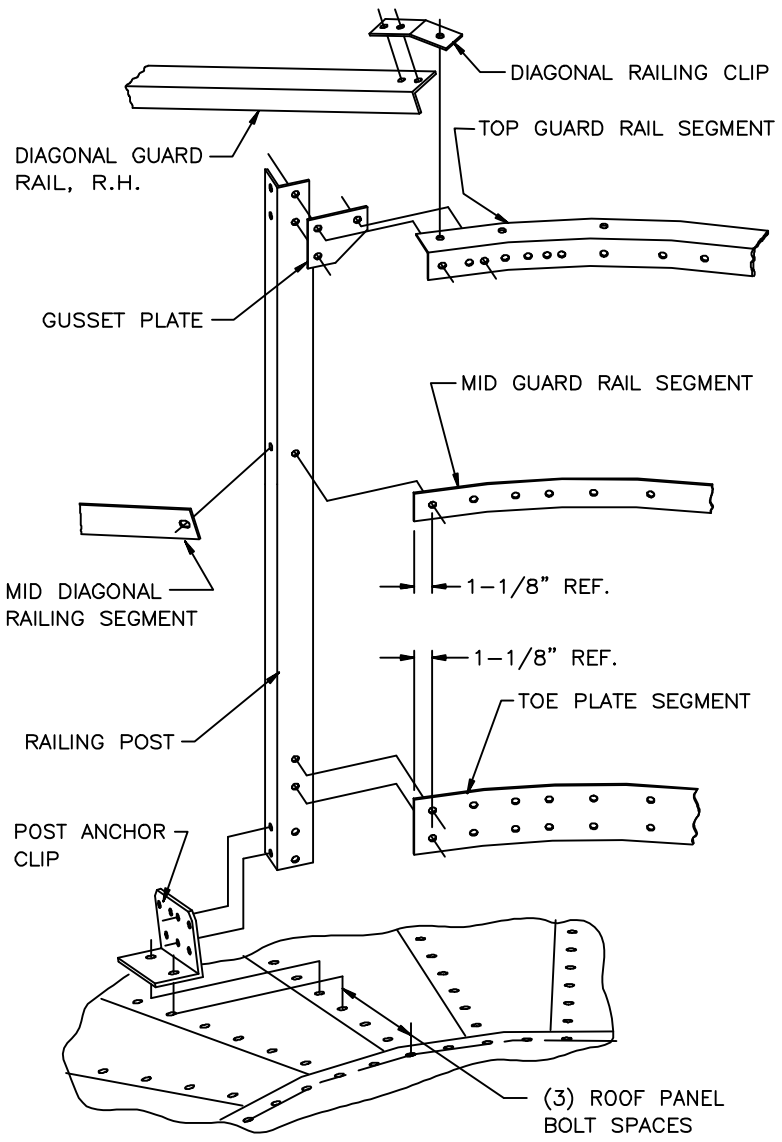

VIEW "C"
RAILING POST EXPLODED VIEW
AS VIEWED FROM INSIDE GUARD RAIL ASSEMBLY

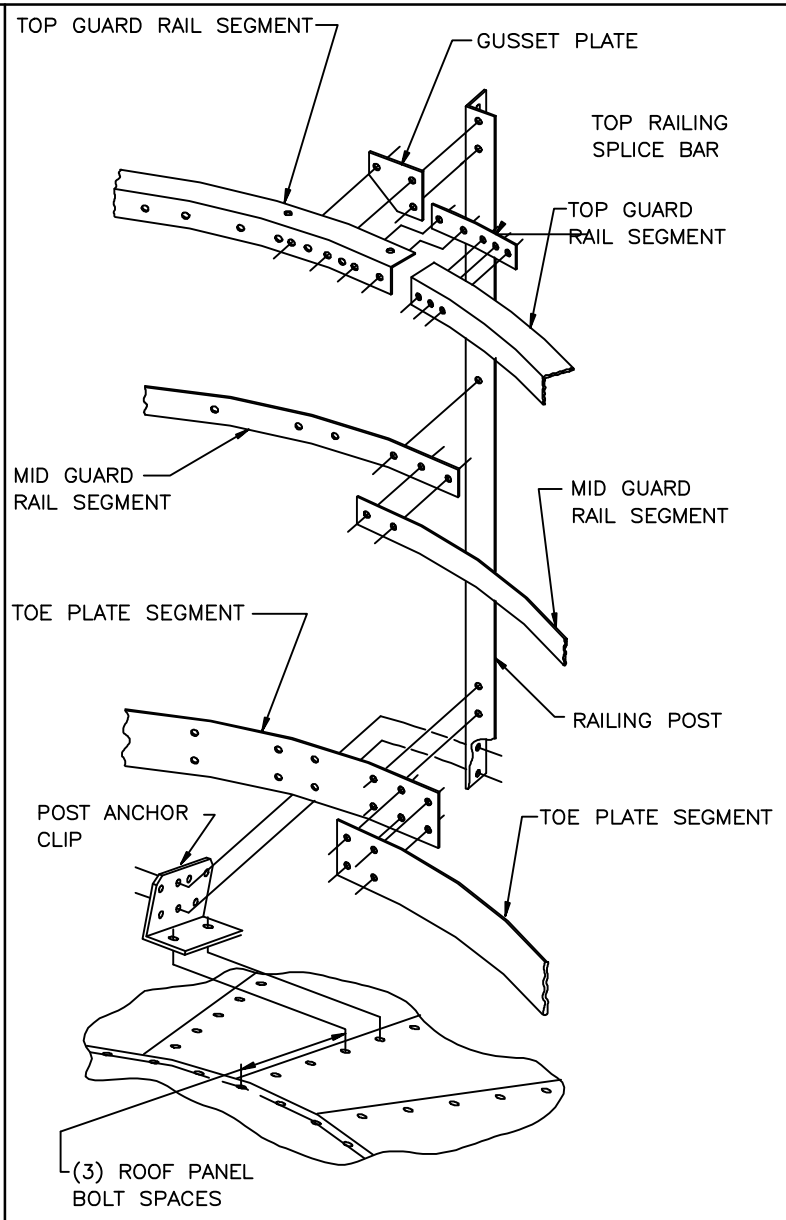

VIEW "D"
RAILING POST EXPLODED VIEW
AS VIEWED FROM INSIDE GUARD RAIL ASSEMBLY

REL	DESCRIPTION	ECN DR. BY
1	RELEASED FOR PRODUCTION	90034 DMN
2	REVISED COPYRIGHT STATEMENT; AND ADDED ASSOCIATED DOCUMENTS NOTE	91149 DMN
3	REMOVED MID DIAGONAL RAILING CLIP FROM VIEW "C"	94205 MCA

ASSOCIATED DOCUMENTS:
261892 ELEVATION VIEW
261893 PLAN VIEW
261894 DETAILS "A" & "B"

A.O. SMITH
ENGINEERED STORAGE PRODUCTS COMPANY
DEKALB, ILLINOIS 60115

CONFIDENTIAL
THIS DRAWING IS THE PROPRIETARY PROPERTY OF A.O. SMITH ENGINEERED STORAGE PRODUCTS COMPANY AND SHALL NOT BE USED NOR REPRODUCED WITHOUT THE EXPRESS WRITTEN CONSENT OF THE COMPANY.
AOSESPC COPYRIGHT © 1998
ALL RIGHTS RESERVED

DRAWN BY DMN
DATE 4/90

CONSTRUCTION DETAIL ROOF GUARD RAIL ASSEMBLY

31' DIAMETER VIEWS "C" AND "D"

DRWG NO. 261895

VENT CAPACITY CHART						
VENT THROAT DIAMETER	1.445 SQUARE FEET					
FLOW IN (CFM)	578	867	1156	1445	4335	7225
PRESSURE DIFFERENCE IN (IN–H20)	.006	.013	.023	.036	.325	.903

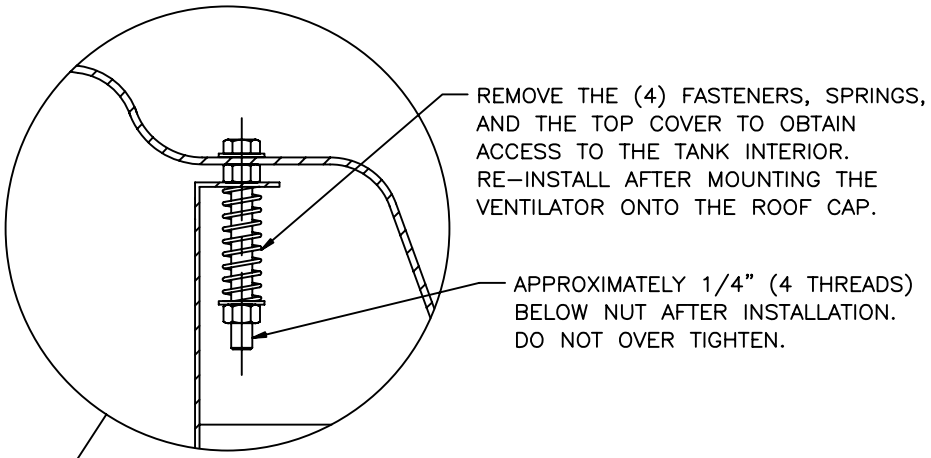

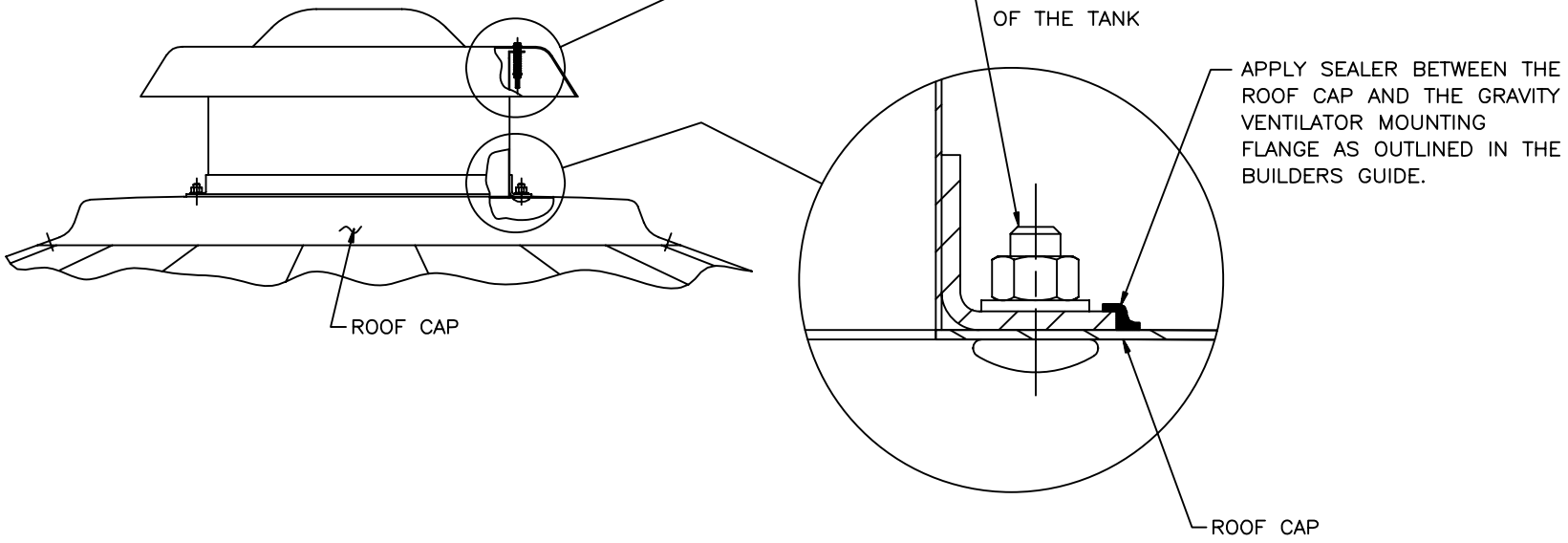

GRAVITY VENTILATOR GENERAL CONSTRUCTION

HOUSING COVER AND SUPPORT MEMBERS – ALUMINUM

INSECT SCREEN – 23 TO 25 MESH .0135"/.0145" DIA. POLYESTER MONOFILAMENT WIRE

BIRD SCREEN – .063 THICK ALUMINUM, .5 X .75 EXPANDED MESH

REL	DESCRIPTION	DR. BY
1	RELEASED FOR PRODUCTION	90034 RKK
2	REVISED COPYRIGHT STATEMENT	91149 DMN
3	ADDED TOP COVER FASTENING DETAIL	99070 TAK
4	ADDED 34' & 36' DIA. ROOF APPLICATIONS	02048 03/22/02 TAK/TAK
5	ADDED 39' – 53' DIA. ROOF APPLICATIONS	02121 08/22/02 TAK/TAK
6	REMOVED 34'–53' DIA. ROOF APPLICATIONS	03114 07/22/03 TAK/TAK
7	UPDATED CAPACITY CHART TO CURRENT SPECIFICATIONS.	06174 07/13/06 NBE/DRT

TechIndex

ENGINEERED STORAGE PRODUCTS COMPANY
DEKALB, ILLINOIS 60115

CONFIDENTIAL
THIS DRAWING IS THE PROPRIETARY PROPERTY OF ENGINEERED STORAGE PRODUCTS COMPANY AND SHALL NOT BE USED NOR REPRODUCED WITHOUT THE EXPRESS WRITTEN CONSENT OF THE COMPANY.
ESPC COPYRIGHT © 2002
ALL RIGHTS RESERVED

DRAWN BY	DMN
DATE	08/13/91

CONSTRUCTION DETAIL GRAVITY VENTILATOR INSTALLATION ONTO ROOF CAP 20° SLOPED ROOF 14' THRU 31' DIA.

DRWG NO. 261307

PART NUMBER	TRX SIZE	INLET SQ. FT.	SHIP WT.	VELOCITY (FPM) 400	500	600	700	800	900	1000
				PRESSURE DROP FOR EXHAUST .025	.035	.050	.070	.090	.120	.155
				PRESSURE DROP FOR SUPPLY .06	.09	.13	.18	.24	.30	.38
				CFM	CFM	CFM	CFM	CFM	CFM	CFM
255469-000	24"	3.14	75 LBS.	1258	1570	1885	2200	2515	2830	3140

10 10

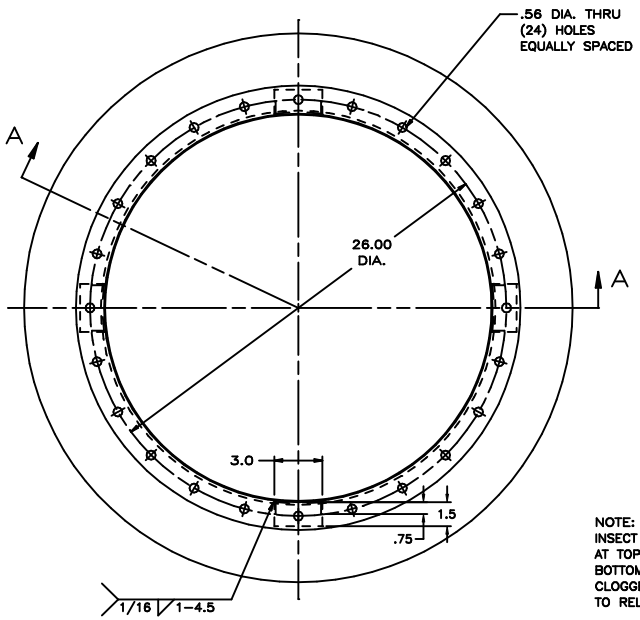

VIEW B-B

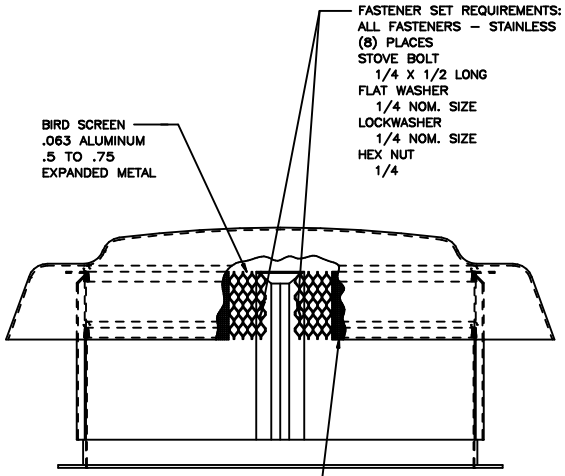

NOTE:
INSECT SCREEN SHOULD BE SNUG AGAINST CAP AT TOP AND TUCKED UNDER BIRD SCREEN AT BOTTOM SUCH THAT IF THE INSECT SCREEN IS CLOGGED WITH ICE, IT CAN DEFLECT INWARD TO RELIEVE A VACUUM PRESSURE.

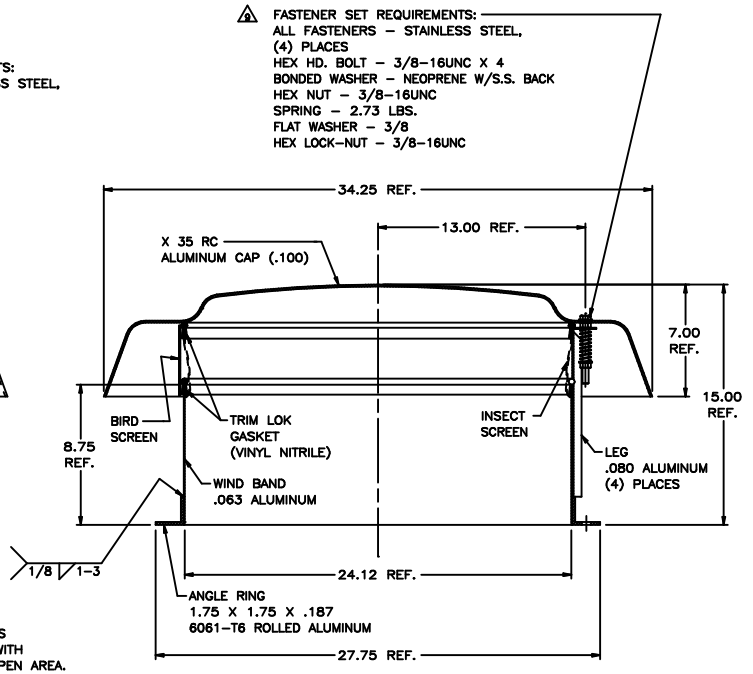

SECTION A-A

B B

NOTE: .25" W.C. EXHAUST & .25" W.C. VACUUM

9 SPECIFICATION NOTE:
THIS VENT MEETS THE REQUIREMENTS OF SECTION 5.7.2 OF AWWA D103-97.

REV	CHANGE DESCRIPTION	ECN DATE MADE/CHKD	APPVD BY DATE
8	ADDED "CFM" TO CHART.	98161 6/1/98 DMA/TAK	TAK 6/98
9	REVISED FASTENER SET REQUIREMENTS; ADDED SPECIFICATION NOTE:	99045 04/01/99 TAK / JJS	JJS 4/99
10	CHANGED INLET SQ. FT. TO 3.14 FROM 3.41 AND CHANGED CFM TO 1570 FROM 1511.	00007 01/14/00 JTF/TAK	TAK 1-00

TOLERANCES ON DIMENSIONS ARE AS FOLLOWS EXCEPT FOR BASIC DIMENSIONS, MAT'L. STOCK SIZES AND TOLERANCES SPECIFIED OTHERWISE.
ONE DECIMAL ±.080
TWO DECIMALS ±.030
THREE DECIMALS ±.015
ANGULAR DIMENSIONS ± 1°
CAST DIMENSIONS
MATERIAL STOCK SIZE TOLERANCES SHALL CONFORM TO APPLICABLE STANDARD MILL VALUES UNLESS COVERED WITHIN A SPECIFIED AOS MATERIAL SPECIFICATION
GEOMETRIC SYMBOLOGY PER ANSI Y14.5

DR	TAK	DATE 12/18/96
CHECKED	RKK	DATE 12-20-96
APPROVED	R.KRAUSE	DATE 12-20-96
SCALE	.25" = 1"	MATERIAL NOTED
NAME	GRAVITY VENT	
PRODUCT	AQUASTORE SYSTEMS	
NEXT ASSY	-	SIZE D
SUPERSEDES	255469 R.6	DRAWING NUMBER 255469 REV 10

A.O. SMITH
ENGINEERED STORAGE PRODUCTS COMPANY
GLENDALE, ILLINOIS 60139

CONFIDENTIAL
THIS DRAWING IS THE EXCLUSIVE PROPERTY OF A.O. SMITH CORP. AND IS LOANED SUBJECT TO AGREEMENT AND RECALL. IT IS NOT TO BE COPIED, LOANED OR DISCLOSED WITHOUT THE EXPRESS WRITTEN CONSENT OF THE COMPANY.
AUTOMATIC ELECTRIC & WATER
ALL RIGHTS RESERVED

Sacrificial Anode Cathodic Protection System Installation Instructions

Aquastore® and Slurrystore® Tanks

Table of Contents

Section 1: General Information 1

Section 2: Anode Installation — Concrete Floor 2

Section 3: Anode Installation — Steel Floor 5

Section 4: Anode Installation — Backfilled Tanks 8

Section 5: Electrical Continuity Test 10

Section 6: Buss Bar Installation 12

Section 7: Anode Layout 13

ENGINEERED STORAGE PRODUCTS COMPANY
345 HARVESTORE DRIVE, DE KALB, ILLINOIS 60115

Copyright 2010
Engineered Storage Products Company
All Rights Reserved
Aquastore and Slurrystore are registered trademarks of Engineered Storage Products Company

P/N 266817-000 Rel. 2
July, 2010
ECN 10129

Section 1: General Information

This document provides installation instructions for structures which utilize a cathodic protection system consisting of sacrificial anodes. The cathodic protection system controls corrosion and provides protection to the portions of the structure immersed in liquid. The anodes are spaced (to the nearest vertical bolt line) around the structure, attached to the floor, and bolted through existing shell sheet bolt holes. Buss bars are used to ensure continuity between the structure shell sheets.

In addition to this document, you will need the Sacrificial Anode Cathodic Protection System Anode As Built Installation Layout and Data Form (ESPC Form #276479-000) to record data. Electronic copies of these documents are available on the ESPC Web LIbrary.

Section 2: Anode Installation — Concrete Floor

See Section 4: Anode Installation — Backfilled Tanks on page 8 if tank is to be backfilled.

Figure 2.1 — Plan View of Anode Assembly with Enlarged Views — Concrete Floor

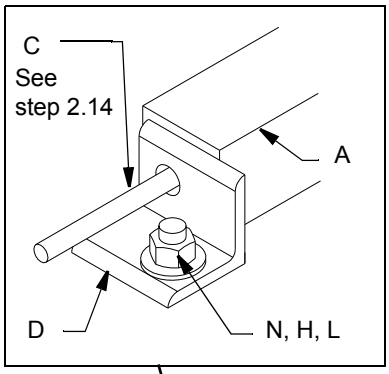

* Items F, G, and J are required for backfilled tank installations. Optional for others.

ITEM	DESCRIPTION
A	Anode
B	Bushing, Non-metallic
C	Anode Threaded Core Rod
D	Clip Angle, Non-metallic
E	Min. #12 AWG (American Gauge Wire) HMWPE wire shall be used when the CP system is in operation.
F	*Nut, Coupling (if required)
G	*Nut, Hex, 3/8" (if required)
H	Nut, Hex, 1/2"
I	Structure Bolt, 1/2" (appropriate length)
J	*Threaded Rod (if required)
K	Washer, 3/8"
L	Washer, 1/2"
M	Washer, Non-metallic (as required)
N	Concrete Anchor, 1/2"

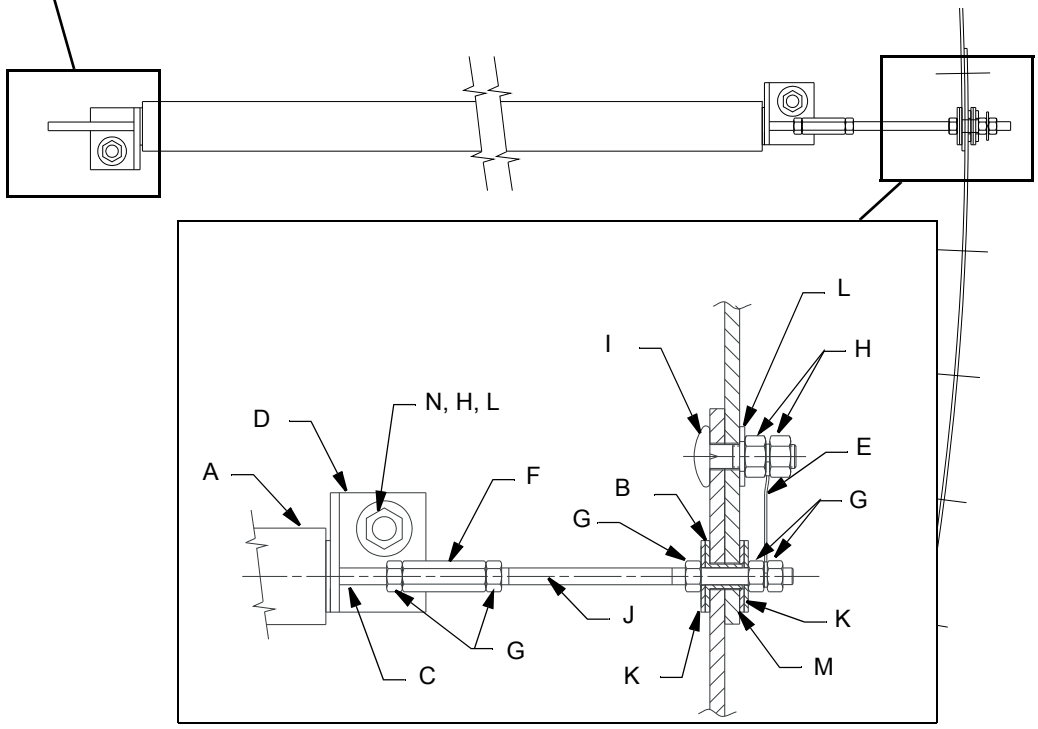

Anode Installation — Concrete Floor

2.1. Install the anodes (A) close to manway(s) and other metallic objects and equally space the remaining anodes around the inside perimeter of the structure. See Figure 7.1 — Generic Anode Layout on page 13. Installer to generate a sketch, using ESPC Form #276479-000, to show anode locations as built. Number the anodes, as this number designation will be used for all subsequent inspections.

2.2. Install a non-metallic clip angle (D) onto each end of the anode core rod (C).

2.3. If required, attach one end of the anode assembly (A) to the threaded rod (J) using a coupling nut (F) and two 3/8" hex nuts (G).

IMPORTANT: The hole in the foundation sheet must be reamed to 3/4" diameter in order to allow the non-metallic bushing to pass through the sheet. Clear the hole of metal burrs and remove all sharp edges before inserting the non-metallic bushing (B) into the hole.

2.4. Install one end of the anode threaded core (C) or threaded rod (J) (if required) through the lowest most reamed bolt hole in the foundation sheet vertical seam using two 3/8" hex nuts (G), two 3/8" washers (K), one non-metallic bushing (B), non-metallic washers (M), and apply sealer. Torque to 50 in-lbs. Do not over-tighten. Over-tightening can cause the non-metallic bushing to crack.

2.5. Use the clip angles (D) as a template to mark the anode position and hole locations on the concrete floor.

2.6. Drill two holes into the concrete floor using the marks as guides.

2.7. Install the concrete wedge anchors (N).

2.8. Apply sealer to the bottom of the anode to prevent ice damage.

2.9. Re-attach one end of the anode assembly (A) to the threaded rod (J) using a coupling nut (F) and two 3/8" hex nuts (G). Torque hex nuts to 50 in-lbs.

2.10. Attach the anode assembly to the floor at each clip angle using a 1/2" washer (L), and a 1/2" hex nut (H). Torque hex nuts to 37 ft-lbs.

2.11. Install the add-on anode, if required. See Sections 2.12 and 2.13.

NOTE: Do not connect the #12 AWG HMWPE wires at this time. They will be connected during the initial inspection and validation procedure.

Figure 2.2 — Add-on Anode

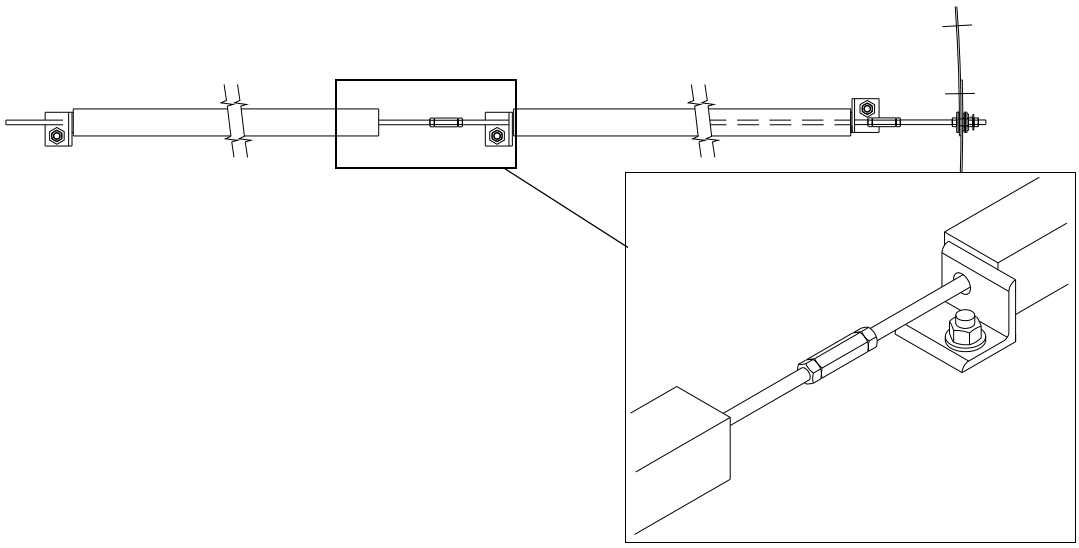

2.12. Attach the add-on anode to the end of the primary anode using two 3/8" hex nuts and one coupling nut.

2.13. Attach the other end of the add-on anode to the floor using a mounting angle.

2.14. All anode connections inside the tank shall be field coated with epoxy base coating or sealer prior to filling the tank. The coating shall be applied to all anode connection accessories. Coating shall be minimum of 16 mil of Two-Component Epoxy Base Coating. (TNEMEC EPOXOLINE FC22 or similar NSF approved epoxy based coating.)

2.15. Continue to "Anode Isolation Test - Electrical Continuity Test" on page 10.

Section 5: Electrical Continuity Test

Anode Isolation Test - Electrical Continuity Test

5.1. Set the multimeter to the continuity check setting.

5.2. From outside the tank, connect one lead of the multimeter to the end of the anode core rod (C), threaded rod (J), or loose end of the #12 AWG HMWPE wire (if buried tank) and the other lead of the multimeter to an adjacent structure bolt.

5.3. Listen to the multimeter for a beep and record the result on ESPC Form #276479-000. No beep indicates the anode is properly installed.

5.4. Troubleshooting guidelines if the multimeter beeps:

Troubleshooting Guidelines	
Possible Cause	**Corrective Action**
Non-metallic bushing cracked	Replace non-metallic bushing; do not over-tighten hex nut.
Metal in contact with anode core rod	Confirm that concrete anchor (if concrete floor) or sheet (if steel floor), washer, and nut are not in contact with anode core rod.

Re-test the anode after making the corrections listed above.

5.5. If the meter still beeps after making the above corrections, contact the Field Service Supervisor at ESPC for assistance. Record final readings on ESPC Form #276479-000.

5.6. Install the buss bars if they were not installed during tank construction. See "Buss Bar Installation" on page 12.

Figure 5.1 — Continuity Test Flow Chart

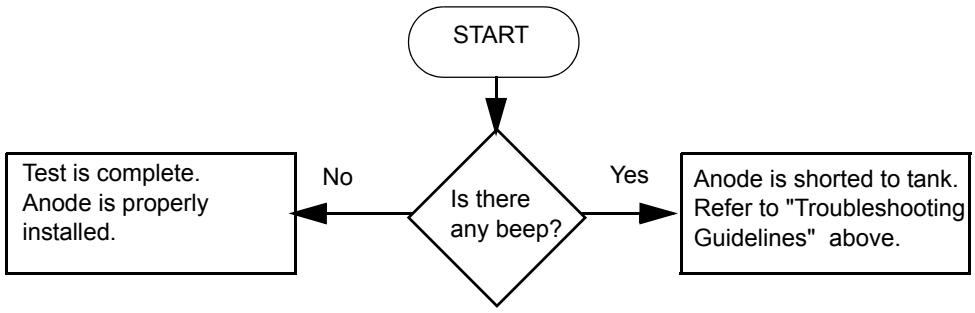

Figure 5.2 — Electrical Continuity Test for Above Grade Tank

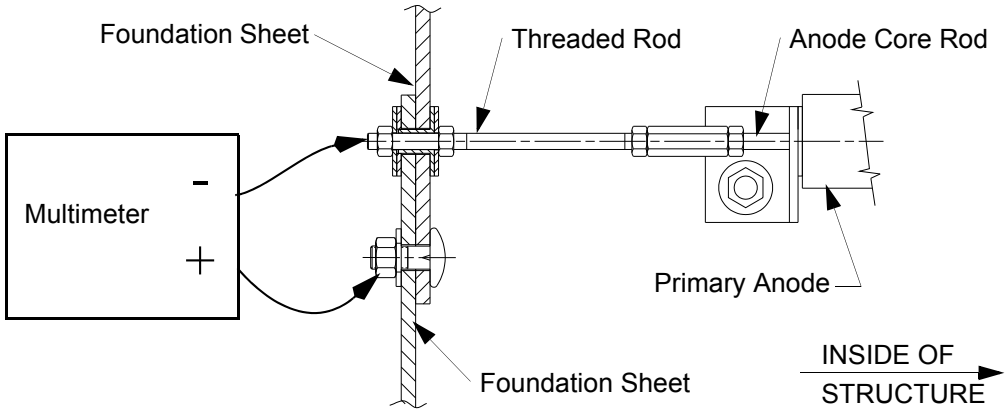

~~**Figure 5.3 — Electrical Continuity Test for Below Grade or Backfilled Tank**~~

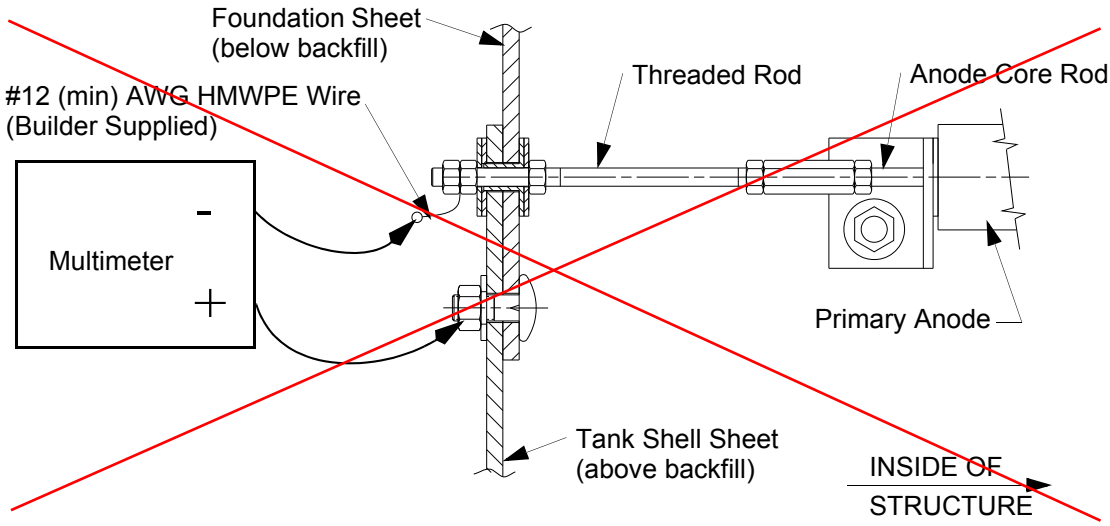

Section 6: Buss Bar Installation

Figure 6.1 — Elevation View and Cross-Section of Buss Bar and Anode

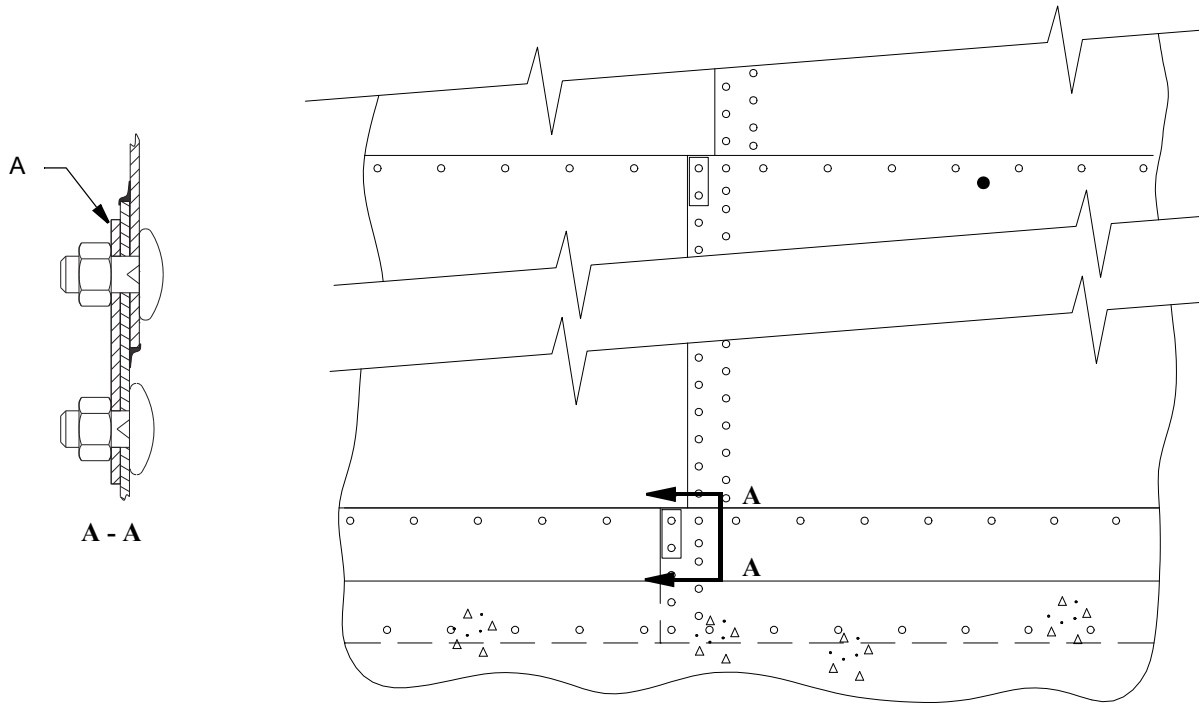

Buss Bar Installation

Buss bars (A) are required on one four-corner joint at every horizontal bolt line.

6.1. Apply sealer to one side of the buss bar.

6.2. To install, remove the hex nut and washer at the four-corner joint and at the next adjacent bolt. Install the buss bar, with the sealer side contacting the shell sheets, onto the two structure bolts. Torque to 37 ft-lbs. Reinstall the two previously removed hex nuts. Discard the washers.

NOTE: On some installations there will be extra buss bars. The extra buss bars may be discarded.

Section 7: Anode Layout

Figure 7.1 — Generic Anode Layout

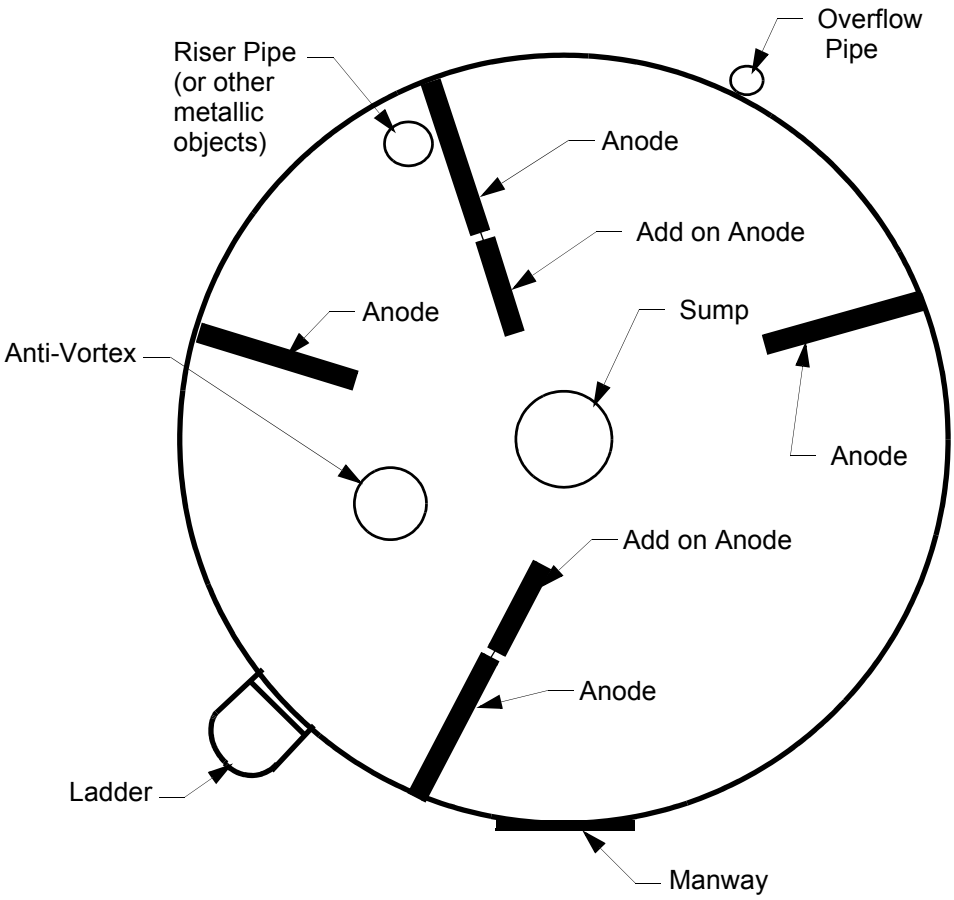

Install an anode close to manway(s) and other metallic objects as shown and equally space the remaining anodes.

Use the Sacrificial Anode Cathodic Protection System Anode As Built Installation Layout and Data Form (ESPC Form #276479-000) to record the locations of metallic objects in the tank and the anode locations.

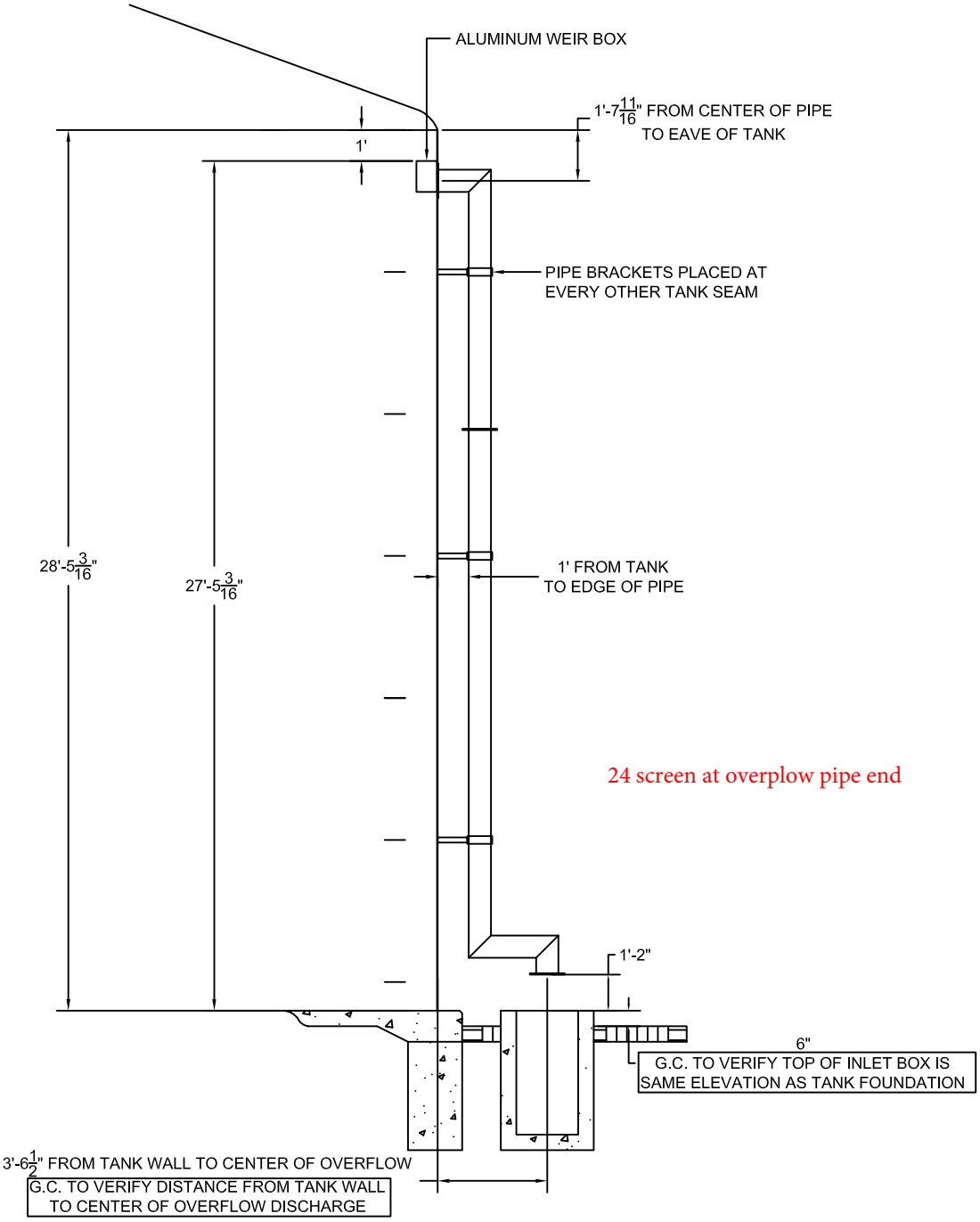

NOTES:

1. PIPE MATERIAL TO BE 8" SCH40 CARBON STEEL.
2. FLANGES TO BE $\frac{1}{4}$" PLATE, $\frac{9}{16}$" HOLES, 150# BOLT PATTERN, TWO-HOLED BOLT ARRANGEMENT
3. EXTERIOR OF PIPE TO BE PAINTED COBALT BLUE
3. PIPE EXTERIOR TO BE BLASTED PER MANUFACTURER'S RECOMMENDATION, 3-5 MILS PRIMER, AND 4-6 MILS SHERWIN WILLIAMS HI-SOLIDS POLYURETHANE OR EQUAL.

DRAWING TITLE	DATE	DWN BY	CHK'D BY	
SAND COULEE, MT WATER STORAGE TANK	8/19/14	JH	JM	
	JOB NO. 406256	DWG. NO. 406256-OF 2		REF. SHEET ST-4
OVERFLOW	ENGINEERING AMERICA INC.			

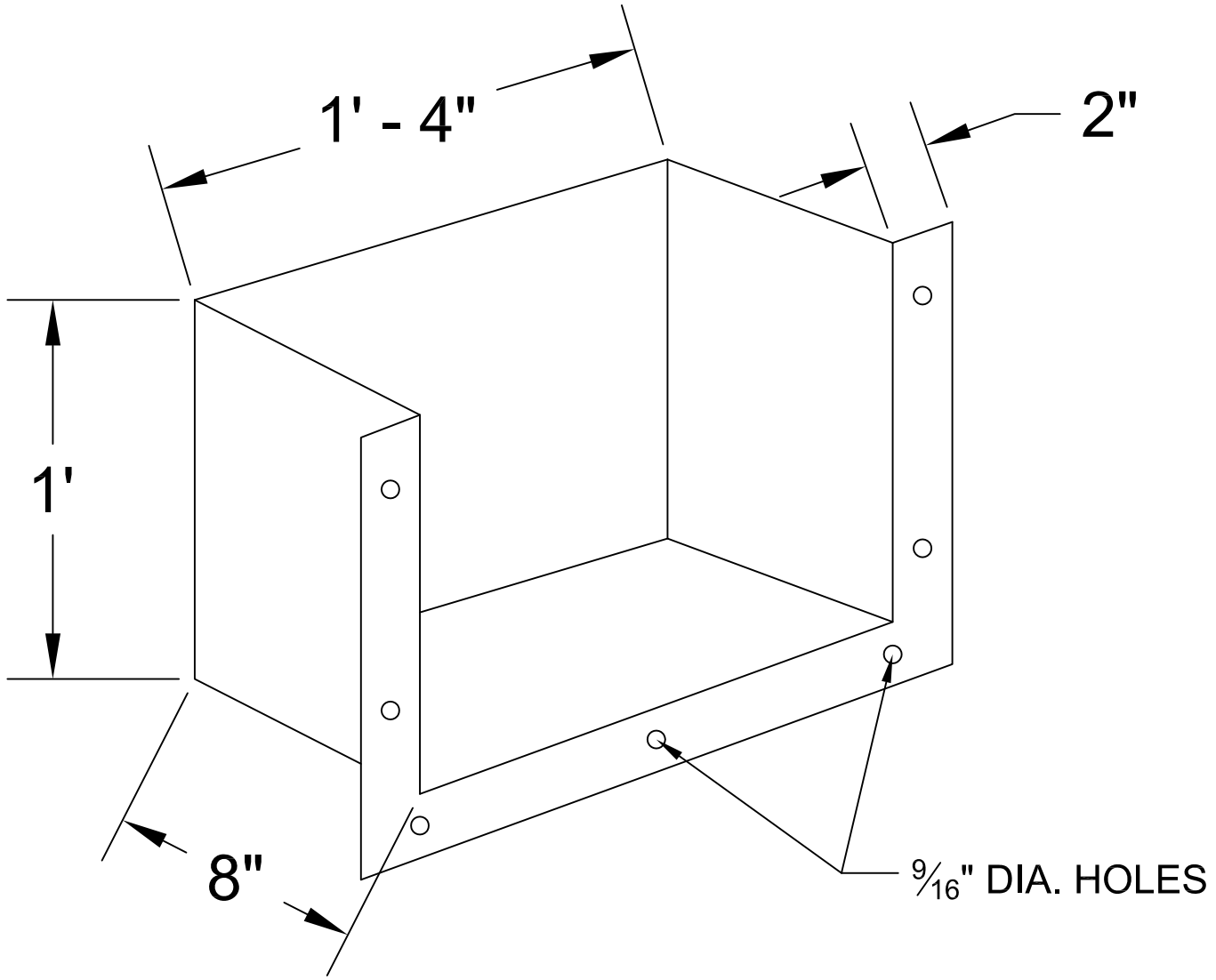

DRAWING TITLE

SAND COULEE, MT
WATER STORAGE TANK

OVERFLOW WEIR BOX

DATE	DWN	CHK'D	
7/28/14	JH	.	

JOB NO.	DWG. NO.	REV.
406256	406256-WB	000

ENGINEERING AMERICA INC.

ANSI COMPLIANT SAFLOK® CARABINERS

Reduce Risk Today - Keep Your Workers Safe with New ANSI Z359 Compliant Saflok® Carabiners!

- Saflok® carabiners are an extremely versatile choice to keep your system securely connected
- User-friendly design for simple operation even while wearing gloves
- Self-closing/Self-locking gate for increased safety and security
- Zinc plated construction for added durability
- High strength steel construction with a minimum tensile strength of 5,000 pounds
- Gate Face withstands a load of 3,600 lbs. (up from 220 lbs.)
- Side of Gate withstands a load of 3,600 lbs. (up from 350 lbs.)
- Compatible with most connecting rings
- Meets OSHA and the new stringent ANSI Z359.1 standard

ANSI COMPLIANT SAFLOK™ CARABINERS

Changes Increase Safety Injuries in the workplace hap pen daily and in most cases are preventable. The original ANSI Z359 standard, introduced in 1992 and revised in 1999, was intended to be a first in a series of standards to address fall protection and to help keep workers safe. Nearly eight years later the standard has been revised. These updates offer significant improvements and will hel lead to a safer work environment.

New Design, Stronger Gate One of the major additions to the Z359.1 standard is new gate strength requirements Under the new standard, snap hooks and carabiners must meet the following;

- Gate face must withstand a load of 3,600 lbs. (up from 220 lbs.)
- Side of gate must withstand a load of 3,600 lbs. (up from 350 lbs.)
- Minor axis of snap hook or carabiner, except those with captive eyes, must withstand 3,600 lbs.
- Tensile load of snap hook or carabiner must withstand 5,000 lbs.

DBI-SALA Saflok® carabiners combine super strength and ease of use. All hardware is constructed from high strength steel and proof tested to exceed the stringent ANSI Z359.1. Our Saflok® carabiners meet the new 3,600 lb. gate strength requirements and have a minimum breaking strength of 5,000 lbs. making them an ideal anchorage connector for your personal fall arrest system.

Saflok® Carabiners are Industry Preferred The user-friendly design of the Saflok® carabiner provides simple one-handed operation even while wearing gloves. They are extremely lightweight and quickly connect your fall arrest system to your anchorage device. The zinc plated steel construction will stand-up even in the most corrosive environments for added longevity. For ultimate safety and security, our Saflok® carabiners also feature a unique self closing and self locking function.

< 2000114 Saflok® Carabiner 2-3/16" Gate Opening

2000113 Saflok® > Carabiner 1-3/16" Gate Opening

2000112 Saflok® > Carabiner 11/16" Gate Opening

Saflok® Carabiner Models:

2000112:	Saflok® steel carabiner, 3,600 lb. self closing and self locking gate (11/16" gate opening)
~~***2000113:***~~	~~Saflok® steel carabiner, 3,600 lb. self closing and self locking gate (1-3/16" gate opening)~~
~~***2000114:***~~	~~Saflok® steel carabiner, 3,600 lb. self closing and self locking gate (2-3/16" gate opening)~~

Specifications:

Construction: Heat treated, zinc plated steel ***Locking Type:*** Double-action self closing/self locking ***Gate Face/Side & Minor Axis:*** 3,600 lbs. minimum ***Proof Load:*** 3,600 lbs. ***Tensile Strength:*** 5,000 lb. minimum ***Weight:*** 0.6 lb. (2000112), 0.9 lb. (2000113), 1.0 lb. (2000114)

Capital Safety
USA: 800.328.6146 • Canada: 800.387.7484 • Asia: +65 6558 7758 • Australia: 1800 245 002 • New Zealand: 0800 212 505
Europe, Middle East, Africa: +33 (0)4 97 10 00 10 • Northern Europe: +44 (0) 1928 571324
www.capitalsafety.com • info@capitalsafety.com

©2007, Capital Safety
Form: 01-15-07 rev: A

DELTA™ VEST STYLE HARNESSES: WITH BACK D-RING

1102000* Tongue Buckles

1103321 Pass-Thru Buckles

1110600 Quick Connect Buckles

DELTA™ VEST STYLE HARNESSES: WITH BACK AND SIDE D-RINGS

1102008* Tongue Buckles

1110625 Quick Connect Buckles

1103875 Pass-Thru Buckles

DELTA™ VEST STYLE HARNESSES: WITH FRONT AND BACK D-RINGS

1102090* Quick Connect Buckles

1107807 Tongue Buckles

1112126 Pass-Thru Buckles

DELTA™ VEST STYLE HARNESSES: WITH BACK AND SHOULDER D-RINGS

1101781* Pass-Thru Buckles

1101294 Tongue Buckles

1110602 Quick Connect Buckles

DELTA™ CROSS-OVER STYLE HARNESSES: WITH FRONT, BACK AND SIDE D-RINGS

1110725* Quick Connect Buckles

1103376 Tongue Buckles

1103270 Pass-Thru Buckles

DELTA™ CONSTRUCTION VEST STYLE HARNESSES: WITH BELT/HIP PAD AND TONGUE BUCKLES

1102201* (SM)

1101654 (MED)

1101655 (LG)

1101656 (XL)

DELTA™ CONSTRUCTION VEST STYLE HARNESSES: WITH BELT/HIP PAD AND QUICK CONNECT BUCKLES

1110575* (SM)

1110576 (MED)

1110577 (LG)

1110578 (XL)

*Item shown

For CSA approved model add a "C" to the end of the part number.

DELTA™ HARNESSES ARE AVAILABLE IN UNIVERSAL SIZES

No matter if your Delta™ is XS or 3XL, it adds to your tool carrying capabilities and your job-site flexibility.

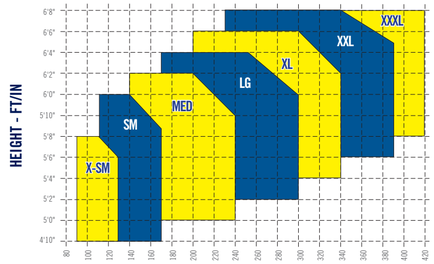

PLEASE SPECIFY SIZE TO ORDER

capital SAFETY

INNOVATION THAT BRINGS WORKERS AT HEIGHT HOME SAFELY.

Capital Safety is a global company solely dedicated to fall protection and rescue. Our focus is clear. It continually drives us to design and manufacture safer gear that workers want to wear.

Innovation means understanding the industries we serve. We listen to the workers in the field, employ the most engineers, customize solutions, register more new patents and introduce more products. To date, Capital Safety has the best quality and largest breadth of products in the industry. But we're more than a product company.

We take an innovative approach in bringing our products to the field. We have created international partnerships and a vast network of certified installers and service centers. We offer on-site and in-house training. And we're ISO 9001-2000 certified for customer service, as well as manufacturing and engineering.

Capital Safety is one of the world's leading manufacturers in fall protection and rescue equipment, with decades of experience and a legacy of innovation. Look for complete solutions in our extensive line of DBI-SALA® and Protecta® products.

DBI SALA®

Capital Safety - USA: 800 328 6146
Canada: 800 387 7484 | Latin America: +1 651 385 4301
Asia: +65 65587758 | Germany: +49 (0)30 92 03 83 87 00
New Zealand: 0800 212 505 | Australia: 1800 245 002
Europe, Middle East, Africa: +33 (0)4 97 10 00 10
Northern Europe: +44 (0)1928 571324
www.capitalsafety.com **info@capitalsafety.com**

©2010, Capital Safety Form: 9700464 rev: B

DELTA™ HARNESS

DELTA™ KEEPS IMPROVING BECAUSE SAFETY NEVER GETS OLD.

DELTA™

THE ULTIMATE IN FALL PROTECTION

DBI SALA®

PRODUCT SHEET

DELTA™ HARNESS

INTRODUCING THE NEW DELTA™ HARNESSES: INNOVATIVE, FULL BODY SUPPORT FOR MORE THAN TWO DECADES.

There's a lot of industry buzz around the new, improved Delta™ harnesses. They combine a set of "industry-first" advancements, with popular features that have made Delta™ the workhorse of the industry. Today's Delta™ represents the culmination of more than twenty years of design, research, manufacturing know-how and on-the-job performance.

DURABLE

The new Delta™ harnesses are as tough as the guys who wear them. They feature coated, corrosion-resistant hardware. All Delta™ webbing is water-repellant and abrasion-resistant. Labels are protected by secure Velcro® covers. And Delta™ proves its workhorse standing with a 420 lb. carrying capacity.

CONVENIENT

A patented triangular design gives Delta™ harnesses a shape of their own, so you can don them quickly and easily. Revolver™ torso adjusters make adjustments fast and secure. Spring-loaded, stand-up dorsal D-rings help make connections fast, easy and safe. Tech-Lite™ aluminum alloy buckles reduce weight and the energy required to do your job during the course of a day. Our exclusive i-Safe™ system gives you an efficient, digital way of recording and storing information on inspections.

COMFORTABLE

Because Delta™ harnesses hold their basic shape, shoulder straps don't rub your neck raw. Made with soft, breathable materials, the Delta™ comfort hip pad ergonomically supports your back and hips while bearing heavy loads.

THE NEW DELTA™ NO-TANGLE ™ HARNESS (FRONT)

REPEL™ WEBBING
Water repellent to reduce attraction of mold and dirt – also has more abrasion resistance.

LANYARD KEEPERS
Delta™ lanyard keepers hold your unused snap hooks and help reduce trip hazards.

REVOLVER™ VERTICAL TORSO ADJUSTER
Simple and fast adjustment that eliminates loose ends and locks into place preventing slippage.

DELTA™ COMFORT HIP PAD
Improved ergonomic fit constructed with a soft, breathable, comfortable interior that supports your back and hips.

TECH-LITE™ QUICK CONNECT BUCKLES
Lightweight aluminum alloy buckles for fast and easy connections.

Other connections available:

Tongue Buckle

Pass-Thru Buckle

THE NEW DELTA™ NO-TANGLE ™ HARNESS (BACK)

STAND-UP DORSAL D-RING
Patented spring-loaded design automatically stands-up ensuring fast, easy and safe connections to your fall arrest system.

NO TANGLE DESIGN
Defining the Delta™ name, the patented triangular design creates a frame that allows the harness to fall into place when donned.

BUILT-IN IMPACT INDICATORS
Rip-stitch indicators allow you to inspect the harness at a glance, for prior damaging impact loads.

420LB CAPACITY
Large capacity adds to tool carrying options and job-site flexibility.

PROTECTED LABELS WITH i-SAFE™
A Velcro® cover protects harness labels and holds DBI-SALA's i-Safe™ identification tag. It gives you an efficient way of recording and storing information on inspections.

DBI-SALA Rope Adjuster Grab and Lanyard 1224005

Static type rope adjuster design that stays where you want it and moves when only you move it. Permanently attached EZ Stop III shock absorbing lanyard limits arresting forces below OSHA's limits.

Use with 5/8" lifelines. Corrosion resistant construction. Lanyard is 3 ft. in length. Meets or exceeds all applicable industry standards including OSHA and ANSI.

This rope adjuster, with an attached 3 ft. shock absorbing lanyard is designed to be a static rope grab that is the connecting lanyard between your harness and the 5/8" lifeline. By compressing the rope adjuster forward, the worker can slide the device along the lifeline until he or she has reached their work position. Release the rope adjuster and it locks onto the lifeline, providing fall protection to the worker.

Product Number:
1224005

Instructions for the following series products:

Vertical Lifelines
Vertical Lifeline Subsystems

(See back pages for specific model numbers.)

User Instruction Manual
Vertical Lifelines and
Vertical Lifeline Subsystems

This manual is intended to meet the Manufacturer's Instructions as required by ANSI Z359.1 and should be used as part of an employee training program as required by OSHA.

WARNING: *This product is part of a personal fall arrest or restraint system. The user must follow the manufacturer's instructions for each component of the system. These instructions must be provided to the user of this equipment. The user must read and understand these instructions before using this equipment. Manufacturer's instructions must be followed for proper use and maintenance of this equipment. Alterations or misuse of this equipment, or failure to follow instructions, may result in serious injury or death.*

IMPORTANT: *If you have questions on the use, care, or suitability of this equipment for your application, contact DBI/SALA.*

IMPORTANT: *Record the product identification information from the ID label in the inspection and maintenance log in section 9.0 of this manual.*

Figure 1 - Vertical Lifeline Assemblies

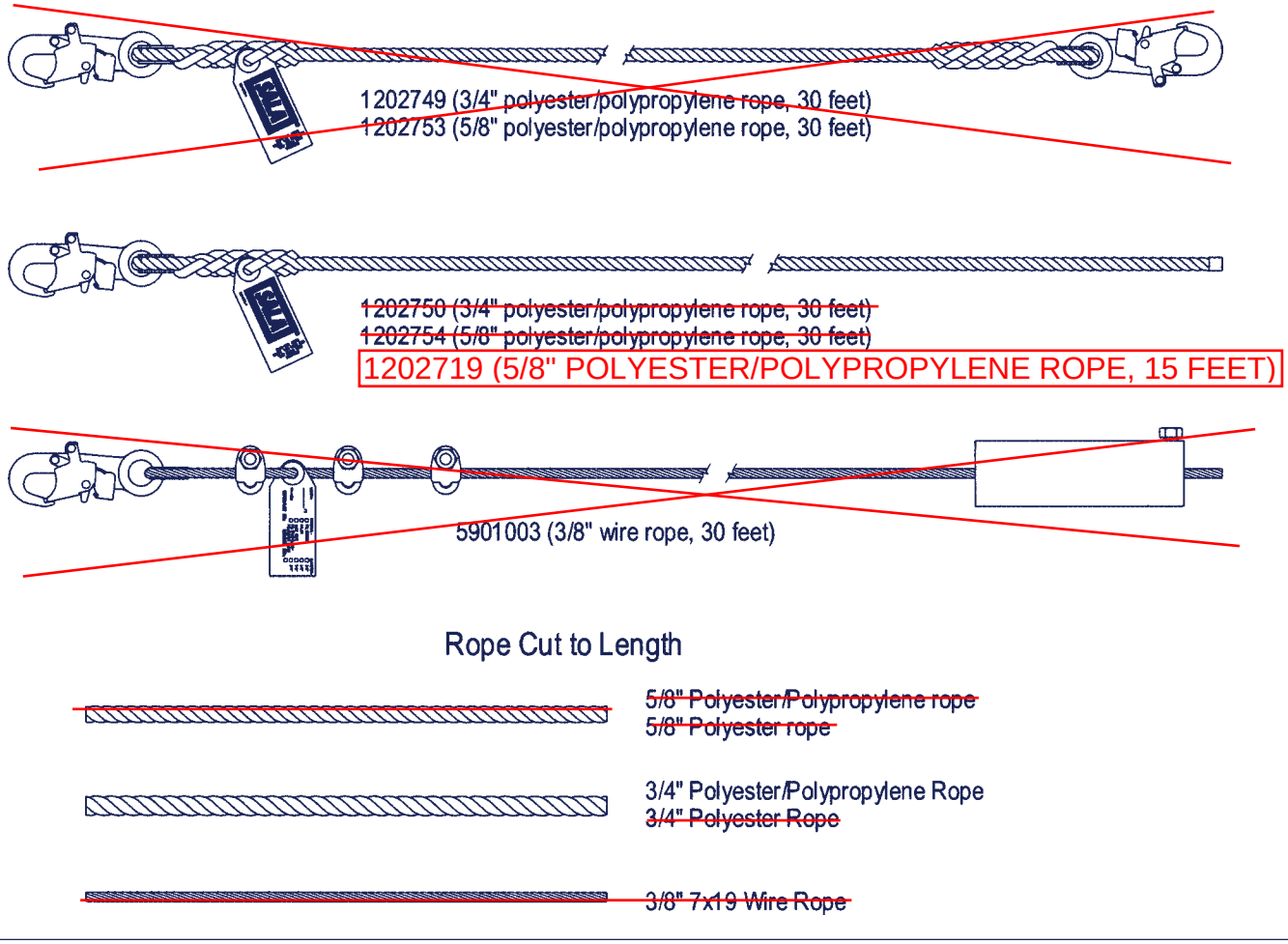

© Copyright 2005, DB Industries, Inc.

DESCRIPTIONS

DBI/SALA Vertical Lifelines and Lifeline Subsystems are available in various styles and configurations. Following are descriptions of typical lifelines and lifeline subsystems. Your model may not be described exactly as configured:

VERTICAL LIFELINE ASSEMBLIES:

1202749: 3/4-inch polyester/polypropylene rope, snap hook at each end, 30 feet long
1202750: 3/4-inch polyester/polypropylene rope, snap hook at one end, 30 feet long
1202753: 5/8-inch polyester/polypropylene rope, snap hook at each end, 30 feet long
1202754: 5/8-inch polyester/polypropylene rope, snap hook at one end, 30 feet long
5901003: 3/8-inch 7x19 galvanized wire rope, snap hook at one end, counterweight, 30 feet long

ROPE MATERIALS:

5/8-inch diameter, polyester/polypropylene rope
5/8-inch diameter, polyester rope
3/4-inch diameter, polyester/polypropylene rope
3/4-inch diameter polyester rope
5/16-inch diameter, 7x19 galvanized wire rope
3/8-inch diameter, 7x19 galvanized wire rope
12-mm diameter, nylon rope
12-mm diameter, polyester rope

1.0 APPLICATIONS

1.1 PURPOSE: Vertical lifelines and vertical lifeline subsystems are intended to be used as part of a personal fall arrest or restraint system. These lifelines and lifeline subsystems (with the exception of 3/8-inch wire rope) are not designed for use in horizontal lifeline systems. Applications include: Inspection work, construction, demolition, maintenance, oil production, confined space rescue, window washing. See Figure 2.

A. FALL ARREST: The lifeline or lifeline subsystem is used as part of a complete fall arrest system, which typically includes a lifeline, rope grab, lanyard, and full body harness. Maximum permissible free fall is six feet.

B. RESTRAINT: The lifeline or lifeline subsystem is used as part of a restraint system. Restraint systems typically include a full body harness and a lanyard to prevent the user from reaching a fall hazard (leading edge roof work). No vertical free fall permitted.

Figure 2 - Applications

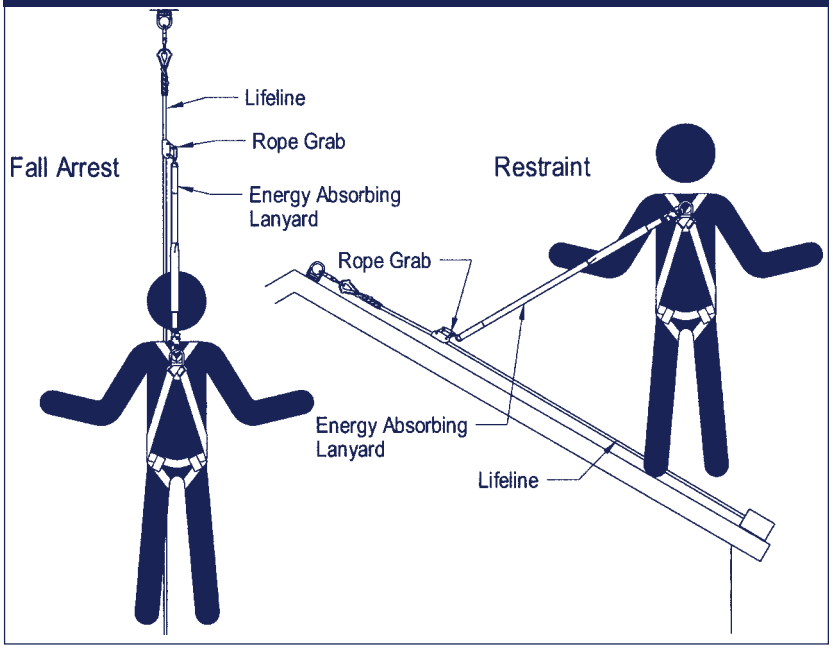

1.2 LIMITATIONS: Consider the following application limitations before using this equipment:

A. CAPACITY: This equipment is designed for use by persons with a combined weight (person, clothing, tools, etc.) of no more than 310 lbs. No more than one person may be connected to a single lifeline.

B. FREE FALL: Personal fall arrest systems used with these lifelines must be rigged to limit the free fall to six feet (according to ANSI Z359.1). Restraint systems must be rigged such that there is no possible vertical free fall. See subsystem manufacturer's instructions for more information.

C. FALL CLEARANCE: Ensure that adequate clearance exists in your fall path to prevent striking an object. The amount of clearance required is dependent on the type of connecting subsystem (rope grab, lanyard), the

anchorage location, and the amount of stretch in the lifeline. See subsystem manufacturer's instructions for more information.

D. ENVIRONMENTAL HAZARDS: Use of this equipment in areas where environmental hazards exist may require additional precautions to reduce the possibility of injury to the user or damage to the equipment. Hazards may include, but are not limited to; high heat, caustic chemicals, corrosive environments, high voltage power lines, explosive or toxic gases, moving machinery, or sharp edges.

E. COMPONENT COMPATIBILITY: The lifelines must be used with DBI/SALA rope grabs only.

F. TRAINING: This equipment is intended to be used by persons trained in its correct application and use.

1.3 APPLICABLE STANDARDS: Refer to national standards, including ANSI Z359.1, and local, state, and federal (OSHA 1910.66, appendix C, 1926.500) requirements for more information on personal fall arrest systems and associated components.

2.0 SYSTEM REQUIREMENTS

2.1 COMPATIBILITY OF COMPONENTS: DBI/SALA equipment is designed for use with DBI/SALA approved components and subsystems only. Substitutions or replacements made with non-approved components or subsystems may jeopardize compatibility of equipment and may effect the safety and reliability of the complete system. See Table 1 for a list of lifeline materials and the model number of compatible equipment available from DBI/SALA.

***IMPORTANT:** The type of lifeline used is dependent upon the application and compatibility requirements of other system components. DBI/SALA rope grabs must be used with DBI/SALA lifelines.*

Table 1 - Component Compatibility

Lifeline Material	Rope Grab Model Number						
	5001441	5000335	5001442	5001011	5006006	5000338	1224005
5/8" Polyester/Polypropylene	X	X					X
3/4" Polyester/Polypropylene			X				
5/8" Polyester	X	X					X
3/4" Polyester			X				
12 mm Nylon					X		
12 mm Polyester					X		
3/8" Wire Rope						X	
5/16" Wire Rope				X			

2.2 COMPATIBILITY OF CONNECTORS: Connectors are considered to be compatible with connecting elements when they have been designed to work together in such a way that their sizes and shapes do not cause their gate mechanisms to inadvertently open regardless of how they become oriented. Contact DBI/SALA if you have any questions about compatibility.

Connectors (hooks, carabiners, and D-rings) must be capable of supporting at least 5,000 lbs. (22kN). Connectors must be compatible with the anchorage or other system components. Do not use equipment that is not compatible. Non-compatible connectors may unintentionally disengage. See Figure 3. Connectors must be compatible in size, shape, and strength. Self locking snap hooks and carabiners are required by ANSI Z359.1 and OSHA.

2.3 MAKING CONNECTIONS: Only use self-locking snap hooks and carabiners with this equipment. Only use connectors that are suitable to each application. Ensure all connections are compatible in size, shape and strength. Do not use equipment that is not compatible. Ensure all connectors are fully closed and locked.

DBI/SALA connectors (snap hooks and carabiners) are designed to be used only as specified in each product's user's instructions. See Figure 4 for inappropriate connections. DBI/SALA snap hooks and carabiners should not be connected:

Figure 3 - Unintentional Disengagement (Roll-out)

If the connecting element that a snap hook (shown) or carabiner attaches to is undersized or irregular in shape, a situation could occur where the connecting element applies a force to the gate of the snap hook or carabiner. This force may cause the gate (of either a self-locking or a non-locking snap hook) to open, allowing the snap hook or carabiner to disengage from the connecting point.

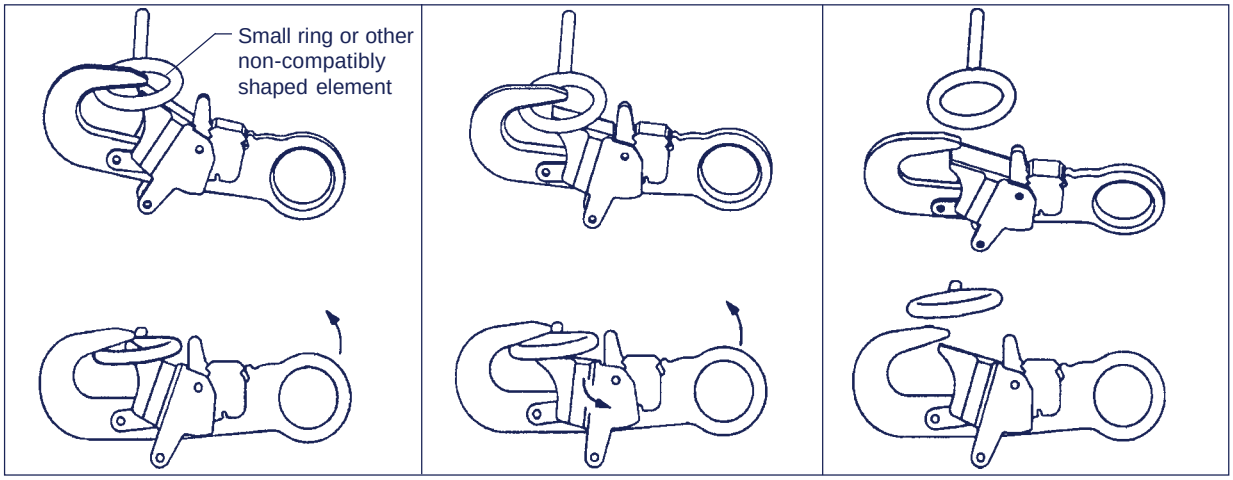

1. Force is applied to the snap hook.
2. The gate presses against the connecting ring.
3. The gate opens allowing the snap hook to slip off.

A. To a D-ring to which another connector is attached.

B. In a manner that would result in a load on the gate.

NOTE: *Large throat opening snap hooks should not be connected to standard size D-rings or similar objects which will result in a load on the gate if the hook or D-ring twists or rotates. Large throat snap hooks are designed for use on fixed structural elements such as rebar or cross members that are not shaped in a way that can capture the gate of the hook.*

C. In a false engagement, where features that protrude from the snap hook or carabiner catch on the anchor and without visual confirmation seems to be fully engaged to the anchor point.

D. To each other.

E. Directly to webbing or rope lanyard or tie-back (unless the manufacturer's instructions for both the lanyard and connector specifically allow such a connection).

F. To any object which is shaped or dimensioned such that the snap hook or carabiner will not close and lock, or that roll-out could occur.

Figure 4 - Inappropriate Connections

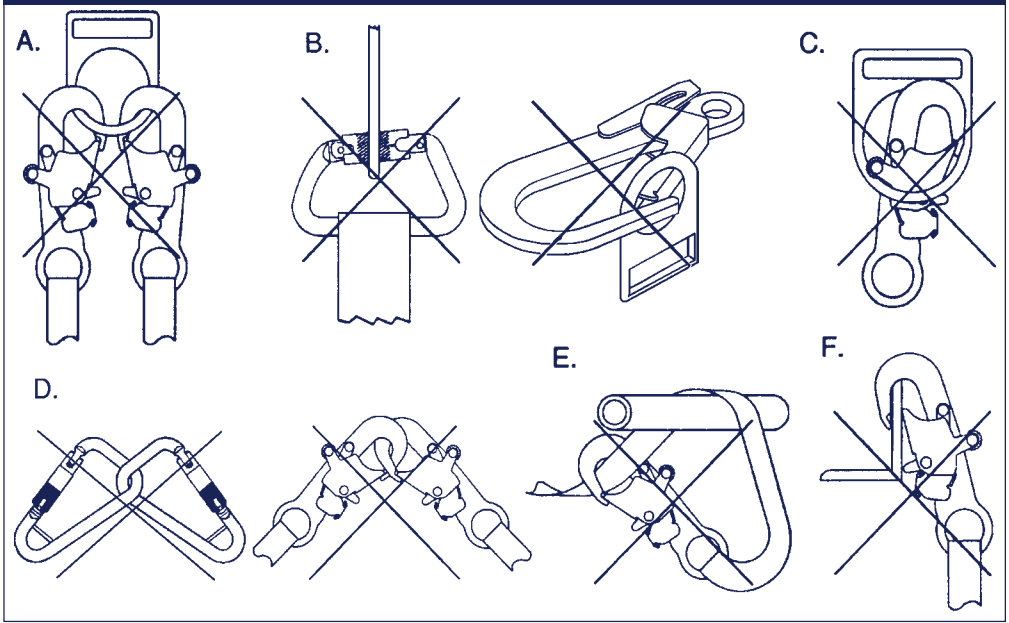

2.4 ANCHORAGE

STRENGTH: The anchorage strength required is dependent upon the application:

A. FALL ARREST: Anchorages used for personal fall arrest systems must be capable of sustaining static loads in the directions permitted by the personal fall arrest system of at least: 3,600 lbs. with certification of a qualified person; or 5,000 lbs. without certification. See ANSI Z359.1 for certification definition. When more

than one personal fall arrest system is attached to an anchorage, the strengths stated above must be met at each anchorage location independently.
From OSHA 1926.500 and 1910.66: Anchorages used for attachment of personal fall arrest systems shall be independent of any anchorage being used to support or suspend platforms, and capable of supporting at least 5,000 lbs. per user attached, or be designed, installed, and used as part of a complete PFAS which maintains a safety factor of at least two, and is under the supervision of a qualified person.

B. RESTRAINT: The restraint system must be attached to an anchorage capable of sustaining static loads in the directions permitted by the restraint system of at least 3,000 lbs. When more than restraint system is attached to an anchorage, the strengths stated above must be met at each anchorage location independently.

3.0 OPERATION AND USE

WARNING: *Do not alter or intentionally misuse this equipment. Consult DBI/SALA when using this equipment in combination with components or subsystems other than those described in this manual. Some subsystem and component combinations may interfere with the operation of this equipment. Use caution when using this equipment around moving machinery, electrical hazards, chemical hazards, and sharp edges.*

WARNING: *Consult your doctor if there is reason to doubt your fitness to safely absorb the shock from a fall arrest. Age and fitness seriously affect a worker's ability to withstand falls. Pregnant women or minors must not use DBI/SALA Vertical Lifelines or subsystems.*

3.1 BEFORE EACH USE of this equipment, carefully inspect it according to steps listed in section 5.0 of this manual.

3.2 PLAN your fall arrest or restraint system before using this equipment. Consider all factors that will affect your safety during use of this equipment. Consider the following points when planning your system:

A. ANCHORAGE: Select a rigid anchorage point that is capable of sustaining the loads specified in section 2.3. For fall arrest applications, select anchorage locations that will minimize free fall and swing fall hazards. For restraint applications, locate the anchorages such that no vertical free fall is possible.

B. FREE FALL: To avoid increased free fall distance, do not work above the anchorage level. Rig personal fall arrest systems so that the free fall is limited to six feet (ANSI Z359.1). Rig restraint systems such that no vertical free fall is possible.

C. FALL ARREST FORCES: The personal fall arrest system must limit fall arrest forces to 1,800 lbs. and deceleration distance must not exceed 42 inches. Do not use a body belt for fall arrest applications.

D. SWING FALLS: See Figure 5. Swing falls occur when the anchorage point is not directly above the point where a fall occurs. The force of striking an object in a swing fall may cause serious injury. Minimize swing falls by working as directly below the anchorage point as possible. Do not permit a swing fall if injury could occur.

Figure 5 - Swing Fall Hazard

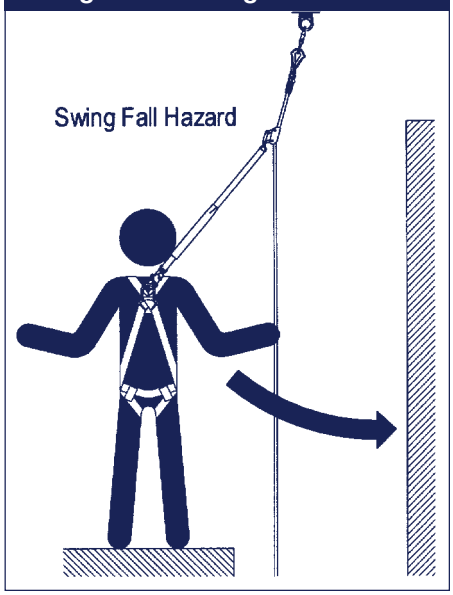

E. FALL CLEARANCE: Ensure sufficient clearance exists in your fall path to prevent striking an object during a fall. The clearance required is dependent upon the subsystem (rope grab and lanyard, rope grab and carabiner) and lifeline properties. Table 2 shows the approximate elongation for new DBI/SALA lifelines in dry conditions. The elongation specified is for an applied static load of 1,800 lbs. Wet ropes generally have more elongation than dry ropes. Allow for additional elongation in wet or humid conditions. Lifeline elongation must be considered when estimating fall clearance.

F. SHARP EDGES: Avoid working where your lifeline, lifeline subsystem, or other system components will be in contact with, or abrade against, unprotected sharp edges. Do not loop a lifeline around small diameter structural members. If working with this equipment around sharp edges is unavoidable, provide protection by using a heavy pad over the exposed sharp edge.

Table 2 - Lifeline Elongation								
Lifeline Material	**Lifeline Length**							
	25 feet	**50 feet**	**75 feet**	**100 feet**	**150 feet**	**200 feet**	**250 feet**	**300 feet**
5/8" Polyester/Polypropylene	2.5 feet	5 feet	7.5 feet	10 feet	15 feet	20 feet	25 feet	30 feet
3/4" Polyester/Polypropylene	3 feet	6 feet	9 feet	12 feet	18 feet	24 feet	30 feet	36 feet
5/8" Polyester	2.75 feet	5.5 feet	8.25 feet	11 feet	16.5 feet	22 feet	27.5 feet	33 feet
3/4" Polyester	3.5 feet	7 feet	10.5 feet	14 feet	21 feet	28 feet	35 feet	42 feet
12-mm Nylon	6.75 feet	13.5 feet	20.25 feet	27 feet	40.5 feet	54 feet	67.5 feet	81 feet
12-mm Polyester	6.25 feet	12.5 feet	18.75 feet	25 feet	37.5 feet	50 feet	62.5 feet	75 feet
3/8" Wire Rope	---	---	---	0.43 feet	0.65 feet	0.86 feet	1.07 feet	1.29 feet
5/16" Wire Rope	---	---	---	0.5 feet	0.75 feet	1.0 feet	1.25 feet	1.5 feet

G. RESCUE: The employer must have a rescue plan and the ability to implement it.

H. AFTER A FALL: Components which have been subjected to fall arrest forces must be removed from service and destroyed.

I. GENERAL USE CONSIDERATIONS: Avoid working where your lifeline may cross or tangle with that of another worker. Do not allow your lifeline to pass under your arms or between your feet.

3.3 MAKING CONNECTIONS: See Figure 6. When using a hook to connect components or to an anchorage, ensure roll-out cannot occur. Self locking snap hooks and carabiners should be used to reduce the possibility of roll-out. Do not tie a knot in the lifeline. Do not attach a snap hook directly to a horizontal lifeline. Follow manufacturer's instructions for each component of the system.

Figure 6 - Making Connections

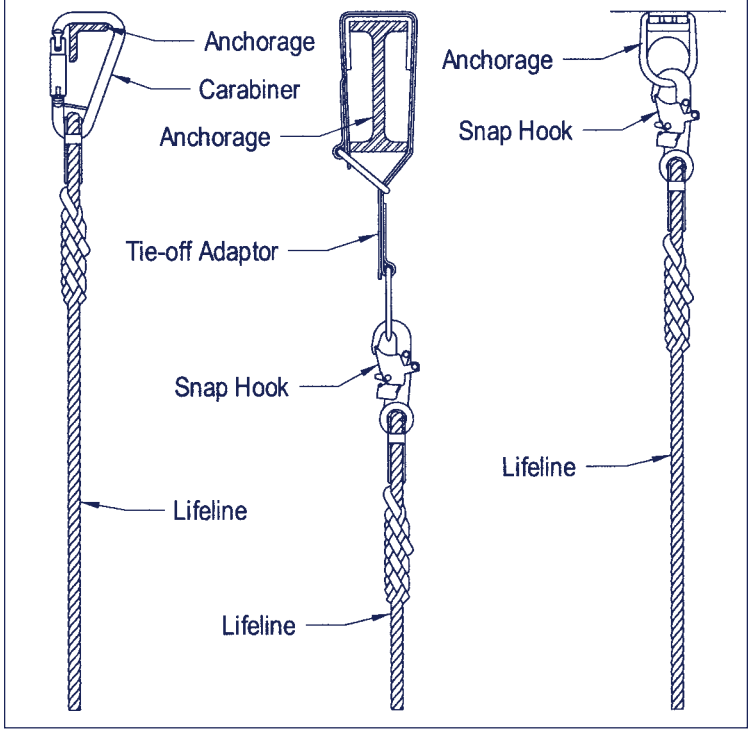

A. CONNECTING TO AN ANCHORAGE OR ANCHORAGE CONNECTOR: Lifelines or lifeline subsystems supplied with connecting hooks should be connected to the anchorage in accordance with section 3.3. Lifelines supplied without hooks must have a hook or anchorage connector spliced directly to the lifeline. See Figure 7. Connectors attached to synthetic rope lifelines must be attached using a spliced eye termination and thimble. The splice must be made with five tucks. Connectors attached to wire rope lifelines must be attached using a formed eye termination with a thimble. Acceptable methods of forming spliced eyes are: Spliced eye with one swaged ferrule; Return eye with a minimum of two swaged ferrules; Return eye with a minimum of three wire rope clips. The connection must support 5,000 lbs. Follow manufacturer's instructions when forming eye with swaged ferrules or wire rope clips.

Figure 7 - Spliced Eye Rope Terminations

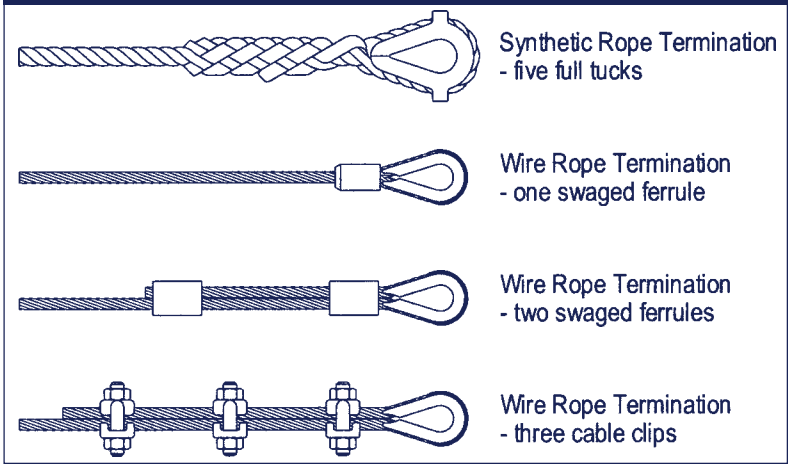

IMPORTANT: *Knots must not be used for load bearing end terminations. See ANSI Z359.1. Some knots reduce lifeline strength fifty percent or more.*

IMPORTANT: *If the user splices or forms end terminations, proper procedures must be followed to ensure compatibility in size, shape, and strength. DBI/SALA is not responsible for subsystems not manufactured by DBI/SALA.*

B. CONNECTING ROPE GRAB TO LIFELINE: Follow the rope grab manufacturer's instructions for connecting the rope grab to the lifeline. DBI/SALA rope grabs must be used with these lifelines.

3.4 AFTER USE of this equipment, clean and store according to section 6.0 of this manual.

4.0 TRAINING

4.1 It is the responsibility of the user to assure they are familiar with these instructions, and are trained in the correct care and use of this equipment. User must also be aware of the operating characteristics, application limits, and the consequences of improper use of this equipment.

WARNING: *Training must be conducted without exposing the trainee to a fall hazard. Training should be repeated on a periodic basis.*

5.0 INSPECTION

5.1 FREQUENCY:

- **Before Each Use** inspect according to steps listed in section 5.2.
- **This Equipment** must be inspected according to steps listed in section 5.2 by a competent person, other than the user, at least annually. Record the results of each inspection in the inspection and maintenance log in section 9.0. NOTE: Cal/OSHA requires personal fall arrest systems be inspected prior to each use for wear, damage, and defects and inspected by a competent person* at least twice a year, in accordance with the manufacturer's recommendations, with inspection dates documented.

**Competent person: An individual knowledgeable of a manufacturer's recommendations, instructions and manufactured components who is capable of identifying existing and predictable hazards in the proper selection, use and maintenance of fall protection.*

WARNING: *If this equipment has been subjected to fall arrest forces remove from service and destroy.*

IMPORTANT: *Extreme working conditions (harsh environments, prolonged use, etc.) may require increasing the frequency of inspections.*

5.2 INSPECTION STEPS:

Step 1. Inspect lifeline hardware (snap hooks, ferrules, thimbles, etc.). These items must not be damaged, broken or distorted. These items must be free of sharp edges, burrs, cracks, worn parts, or corrosion. Hook gates must move freely and lock upon closing.

Step 2. Inspect the lifeline per the following:

SYNTHETIC ROPE: Inspect rope for concentrated wear. Material must be free of frayed strands, broken yarns, cuts, abrasions, burns, and discoloration. The rope must be free of knots, excessive soiling, paint build-up, and rust staining. Rope splices must be tight, with five full tucks, and thimbles must be held firmly by the splice. Check for chemical or heat damage; indicated by brown, discolored, or brittle areas. Check for ultraviolet damage; indicated by discoloration and splinters and slivers along the rope surface. All of the above factors are known to reduce rope strength. Damaged or questionable rope should be replaced.

WIRE ROPE: Inspect entire length of wire rope. Always wear protective gloves when inspecting wire rope. Inspect for broken wires by passing cable through gloved hands, flexing the rope every few inches to expose breaks. Broken wires can be removed by bending the wire back and forth parallel to the rope

length. Do not pull broken wires out of the rope. Replace the wire rope if there are six or more randomly distributed broken wires in one lay; or three or more broken wires in one strand in one lay. A “lay” of wire rope is the length of wire rope it takes for a strand (the larger group of wires) to complete one revolution along the rope. Replace the wire rope if there are broken wires within one inch of the swages at either end of the assembly. Wire rope should be free of corrosion.

Step 3. Inspect labels. All labels must be present and fully legible. See section 8.0.

Step 4. Inspect each system component or subsystem according to manufacturer’s instructions.

Step 5. Record the inspection date and results in the inspection log in section 9.0.

5.3 If inspection reveals an unsafe or defective condition, remove equipment from service and destroy, or contact an authorized service center for repair.

6.0 MAINTENANCE, SERVICING, STORAGE

6.1 Clean the lifeline with water and a mild detergent. Wipe hardware dry with a clean, dry cloth and hang to air dry. Do not force dry with heat. An excessive build-up of dirt, paint, etc. may prevent the lifeline from working properly, and in severe cases, weaken the rope.

6.2 Additional maintenance and servicing procedures must be completed by and authorized service center. Authorization must be in writing. Do not disassemble this equipment.

6.3 Store the lifeline in a cool, dry, clean environment, out of direct sunlight. Avoid areas where chemical vapors may be present. Thoroughly inspect the lifeline after extended storage.

7.0 SPECIFICATIONS

7.1 LIFELINE SPECIFICATIONS:

* The 12-mm diameter lifelines do not meet ANSI Z359.1 requirements.

Table 3 - Lifeline Specifications

Lifeline Material	Tensile Strength
5/8-inch diameter, polyester/polypropylene blend, three-strand rope	7,000 lbs.
3/4-inch diameter, polyester/polypropylene blend, three-strand rope	8,820 lbs.
5/8-inch diameter, polyester, three-strand rope	8,500 lbs.
3/4-inch diameter, polyester, three-strand rope	12,000 lbs.
12-mm diameter nylon rope *	6,614 lbs.
12-mm diameter polyester rope *	5,004 lbs.
3/8-inch diameter, galvanized wire rope	14,400 lbs.
5/16-inch diameter galvanized wire rope	9,800 lbs.
5/8-inch diameter nylon static kernmantle rope	12,000 lbs.

7.2 HARDWARE SPECIFICATIONS:

Snap Hook: Drop forged, alloy steel self locking snap hook, 5,000 lbs. tensile strength.

8.0 LABELING

8.1 The following labels must be present and fully legible:

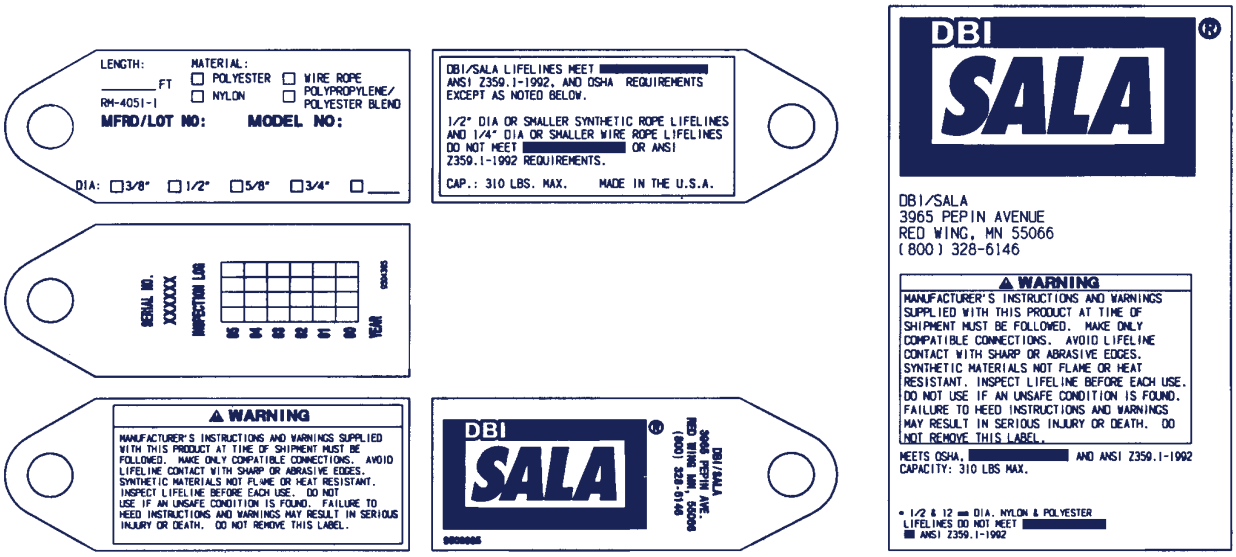

9.0 INSPECTION AND MAINTENANCE LOG

DATE OF MANUFACTURE: _____

MODEL NUMBER: _____

DATE PURCHASED: _____

INSPECTION DATE	INSPECTION ITEMS NOTED	CORRECTIVE ACTION	MAINTENANCE PERFORMED
Approved By:			
Approved By:			
Approved By:			
Approved By:			
Approved By:			
Approved By:			
Approved By:			
Approved By:			
Approved By:			
Approved By:			
Approved By:			
Approved By:			
Approved By:			
Approved By:			

This instruction applies to the following models:

1202701	1202757	1202813	1202868	1202923	1202979	1203119	1210400	3511004	5900161
1202702	1202759	1202814	1202869	1202924	1202980	1203120	1210450	3511005	5900162
1202703	1202760	1202815	1202870	1202925	1202981	1203121	1210500	3511006	5900163
1202704	1202761	1202816	1202871	1202926	1202982	1203122	1210800	3511007	5901000
1202705	1202762	1202817	1202872	1202927	1202983	1203123	1211000	3511008	5901001
1202706	1202763	1202818	1202873	1202928	1202984	1203124	1211030	3511009	5901002
1202707	1202764	1202819	1202874	1202929	1202985	1203125	1211050	3511010	5901003
1202708	1202765	1202820	1202876	1202930	1202986	1203126	1211075	3511011	5901004
1202709	1202766	1202821	1202877	1202931	1202987	1203127	1211100	3511012	5901005
1202710	1202767	1202822	1202878	1202933	1202988	1203128	1211120	3511013	5901006
1202711	1202768	1202823	1202879	1202934	1202989	1203129	1211125	3511014	5901007
1202712	1202769	1202824	1202880	1202935	1202990	1203130	1211127	3511015	5901008
1202713	1202770	1202825	1202881	1202936	1202991	1203131	1211150	3511016	5901009
1202714	1202771	1202826	1202882	1202937	1202992	1203132	1211170	3511017	5901010
1202715	1202772	1202827	1202883	1202938	1202993	1203133	1211200	3900071	5901011
1202716	1202773	1202828	1202884	1202939	1202994	1203134	1211250	5900110	5901012
1202717	1202774	1202829	1202885	1202940	1202995	1203135	1211300	5900111	5901013
1202718	1202775	1202830	1202886	1202941	1202996	1203136	1211350	5900112	5901014
1202719	1202776	1202831	1202887	1202942	1202997	1203137	1211400	5900113	5901015
1202720	1202777	1202832	1202888	1202943	1202998	1203138	1211500	5900114	5901016
1202721	1202778	1202833	1202889	1202944	1202999	1203139	1211800	5900115	5901018
1202722	1202779	1202834	1202890	1202945	1203011	1203140	1212006	5900116	5901019
1202723	1202780	1202837	1202891	1202946	1203012	1203142	1212015	5900117	5901020
1202724	1202781	1202838	1202892	1202947	1203013	1203143	1212025	5900118	5901021
1202725	1202782	1202839	1202893	1202948	1203020	1204001	1212027	5900119	5901022
1202726	1202784	1202840	1202894	1202950	1203021	1210001	1212030	5900120	5901023
1202727	1202785	1202841	1202895	1202951	1203022	1210002	1212040	5900121	5901024
1202729	1202786	1202842	1202896	1202952	1203023	1210010	1212050	5900122	5901025
1202730	1202787	1202843	1202897	1202953	1203024	1210012	1212070	5900123	5901026
1202731	1202788	1202844	1202898	1202954	1203025	1210020	1212075	5900124	5901027
1202732	1202789	1202845	1202899	1202955	1203040	1210025	1212080	5900125	5901028
1202733	1202790	1202846	1202900	1202956	1203045	1210030	1212100	5900126	5901029
1202734	1202791	1202847	1202901	1202957	1203080	1210035	1212120	5900127	5901030
1202735	1202792	1202848	1202902	1202958	1203085	1210050	1212125	5900128	5901031
1202736	1202793	1202849	1202903	1202959	1203100	1210055	1212150	5900129	5901032
1202737	1202794	1202850	1202904	1202960	1203101	1210060	1212200	5900130	5901033
1202738	1202795	1202851	1202905	1202961	1203102	1210075	1212210	5900131	5901034
1202739	1202796	1202852	1202906	1202962	1203103	1210085	1212300	5900132	5901035
1202740	1202797	1202853	1202907	1202963	1203104	1210090	1212400	5900133	6126023
1202741	1202798	1202854	1202908	1202964	1203105	1210100	1212500	5900134	6126025
1202742	1202799	1202855	1202909	1202965	1203106	1210120	1212610	5900135	6126050
1202743	1202800	1202856	1202910	1202966	1203107	1210125	1212611	5900136	6126100
1202744	1202801	1202857	1202911	1202967	1203108	1210140	1212612	5900137	6126113
1202745	1202802	1202858	1202912	1202968	1203109	1210150	1212613	5900138	6126175
1202746	1202803	1202859	1202913	1202969	1203110	1210160	1212614	5900139	6130004
1202749	1202804	1202860	1202914	1202970	1203111	1210180	1212615	5900150	6130005
1202750	1202806	1202861	1202915	1202971	1203112	1210184	1213300	5900151	6130010
1202751	1202807	1202862	1202917	1202972	1203113	1210200	1370000	5900152	6130011
1202752	1202808	1202863	1202918	1202973	1203114	1210250	3401000	5900153	6130012
1202753	1202809	1202864	1202919	1202974	1203115	1210300	3511000	5900154	6130013
1202754	1202810	1202865	1202920	1202976	1203116	1210310	3511001	5900155	6130014
1202755	1202811	1202866	1202921	1202977	1203117	1210320	3511002	5900156	6130015
1202756	1202812	1202867	1202922	1202978	1203118	1210350	3511003	5900160	6130016

Additional model numbers may appear on the next printing of these instructions

Continued on next page. . .

continued from previous page...

This instruction applies to the following models:

6130018	6130075	6130160	6130900	6140026	6140060	6140121	6140190	6140750
6130020	6130080	6130164	6131000	6140027	6140065	6140122	6140200	6140788
6130022	6130082	6130170	6132000	6140028	6140070	6140123	6140220	6140800
6130024	6130090	6130175	6133200	6140029	6140075	6140128	6140226	6140850
6130025	6130093	6130180	6140007	6140030	6140079	6140129	6140228	6140875
6130026	6130095	6130184	6140008	6140032	6140080	6140130	6140230	6140900
6130029	6130100	6130185	6140009	6140033	6140085	6140131	6140250	6140930
6130030	6130105	6130200	6140010	6140034	6140086	6140134	6140300	6141000
6130031	6130109	6130220	6140011	6140035	6140088	6140136	6140310	6141209
6130032	6130110	6130225	6140012	6140036	6140090	6140138	6140328	6141221
6130033	6130114	6130240	6140013	6140038	6140094	6140139	6140364	6141420
6130036	6130115	6130245	6140014	6140039	6140095	6140140	6140375	6141450
6130038	6130120	6130250	6140015	6140040	6140097	6140143	6140400	6141480
6130040	6130125	6130275	6140016	6140041	6140099	6140144	6140440	6141650
6130041	6130130	6130300	6140017	6140042	6140100	6140146	6140500	6141700
6130044	6130131	6130350	6140018	6140044	6140104	6140150	6140506	6141730
6130050	6130140	6130400	6140019	6140046	6140105	6140151	6140510	6141742
6130054	6130142	6130427	6140020	6140049	6140111	6140160	6140535	6141800
6130060	6130144	6130450	6140021	6140050	6140113	6140166	6140550	6142000
6130064	6130145	6130500	6140022	6140051	6140114	6140174	6140560	6142030
6130066	6130147	6130600	6140023	6140052	6140115	6140175	6140600	6142300
6130070	6130150	6130760	6140024	6140055	6140117	6140180	6140674	6142720
6130074	6130154	6130850	6140025	6140059	6140120	6140184	6140700	6142800

Additional model numbers may appear on the next printing of these instructions

USA
3965 Pepin Avenue
Red Wing, MN 55066-1837
Toll Free: 800-328-6146
Phone: (651) 388-8282
Fax: (651) 388-5065
www.salagroup.com

Canada
260 Export Boulevard
Mississauga, Ontario L5S 1Y9
Toll Free: 800-387-7484
Phone: (905) 795-9333
Fax: (905) 795-8777
www.salagroup.com

This manual is available for download at www.salagroup.com.

Certificate No. FM 39709

Form: 5902127
Rev: H

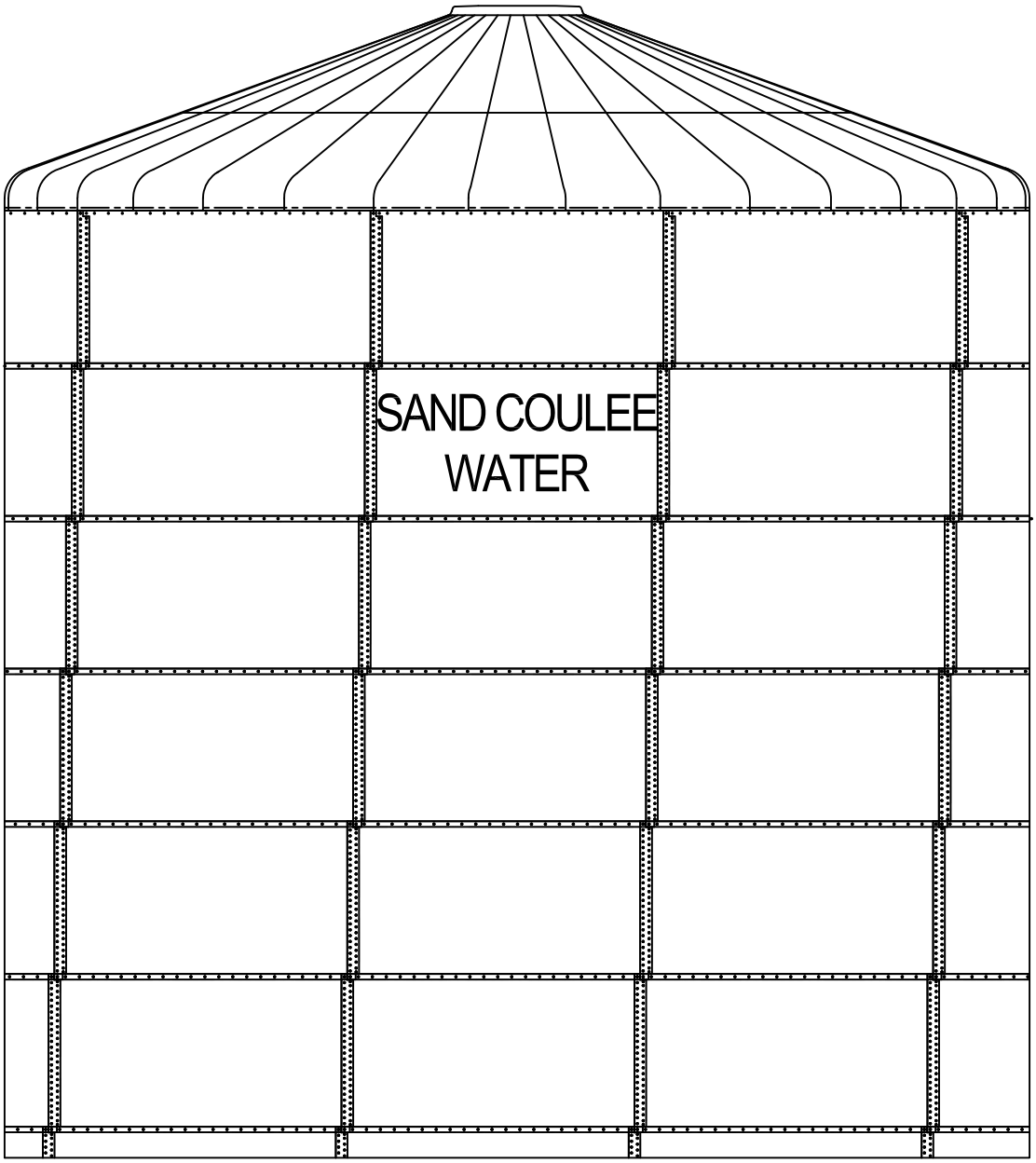

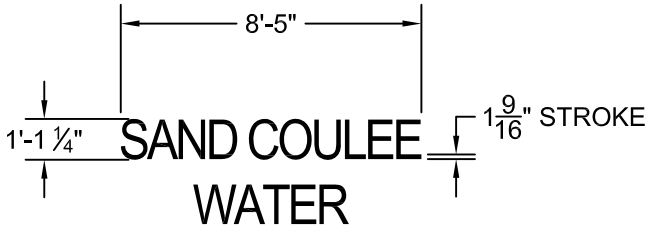

NOTES:

1. DECAL LETTERING TO BE WHITE IN COLOR AND BEGIN ON SECOND SHEET FROM TOP.

DRAWING TITLE	DATE	DWN BY	CHK'D BY	
SAND COULEE, MT WATER STORAGE TANK	8/5/14	JH	JM	
	JOB NO. 406256		DWG. NO. 406256-DECAL	REF. SHEET ST-4
DECAL	ENGINEERING AMERICA INC.			

FOR REFERENCE ONLY

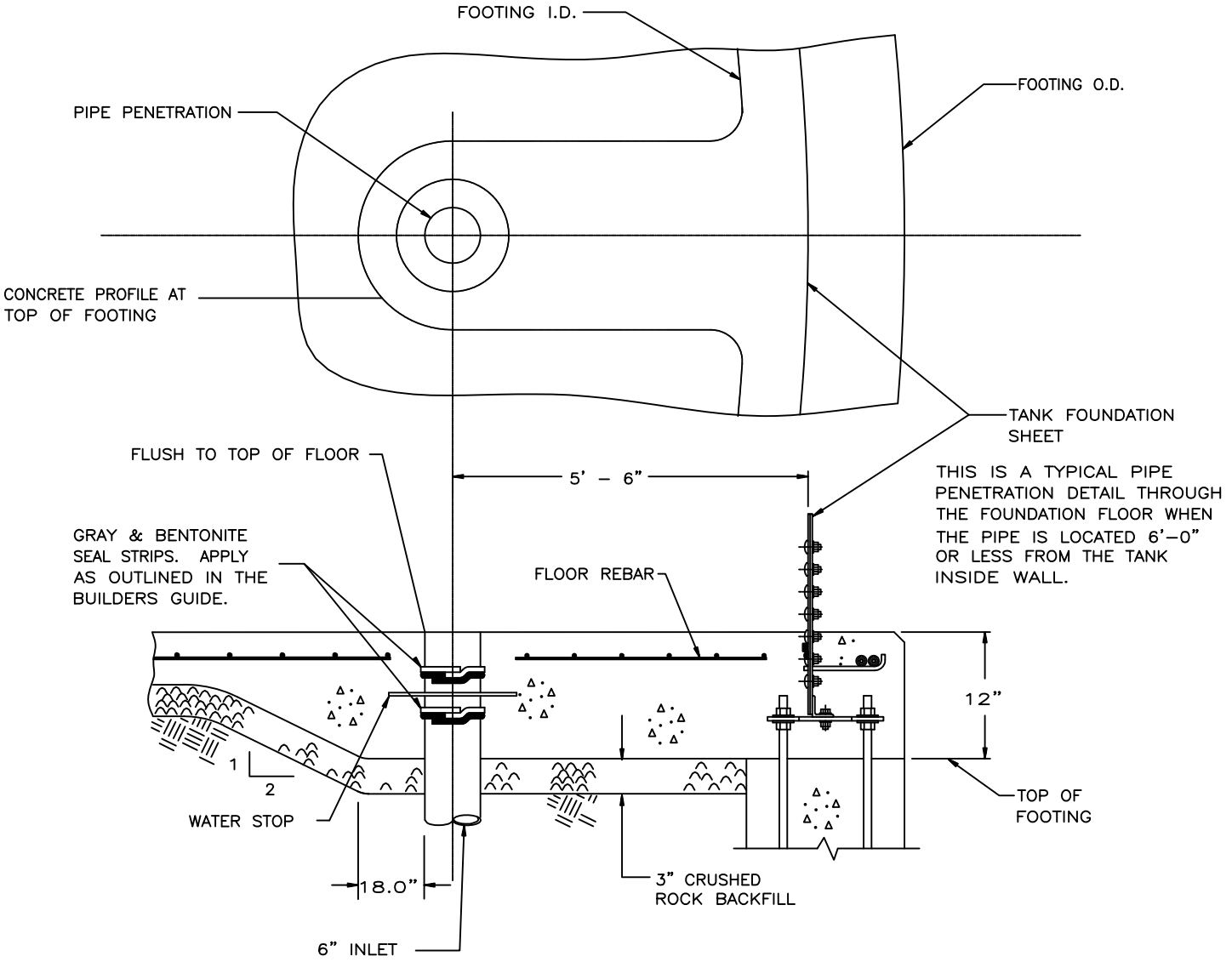

SAND COULEE, MT
WATER STORAGE TANK

6" INLET
FLOOR PIPE PENETRATION

DATE	DWN	CHK'D	
9/8/14	JH	JM	
JOB NO. 406256		DWG. NO. 406256-INLET	REF. SHEET ST-3

ENGINEERING AMERICA INC.

FOR REFERENCE ONLY

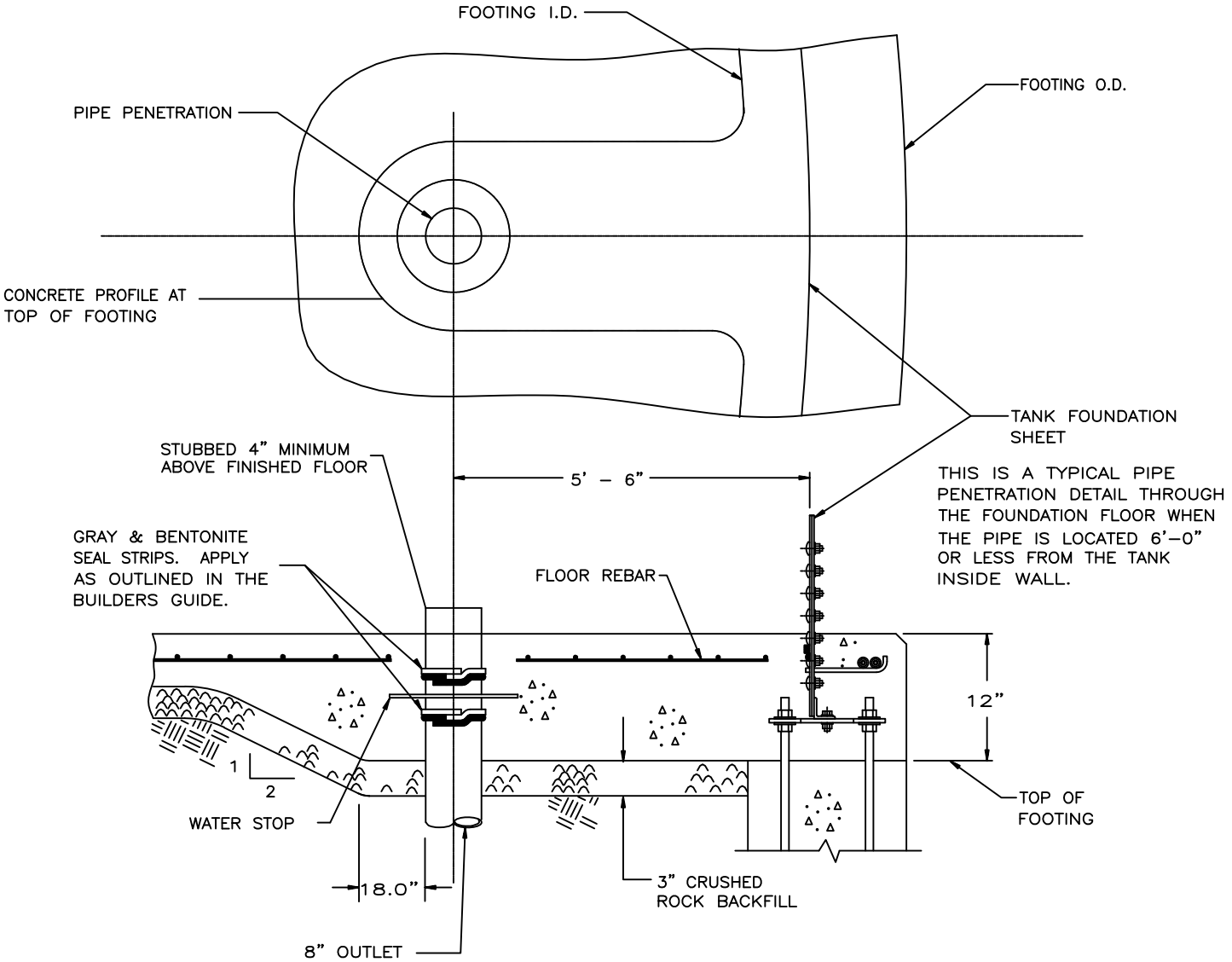

SAND COULEE, MT WATER STORAGE TANK	DATE	DWN	CHK'D	
	9/8/14	JH	JM	
	JOB NO.	DWG. NO.		REF.
	406256	406256-OUTLET		SHEET ST-3
8" OUTLET FLOOR PIPE PENETRATION	ENGINEERING AMERICA INC.			

FOR REFERENCE ONLY

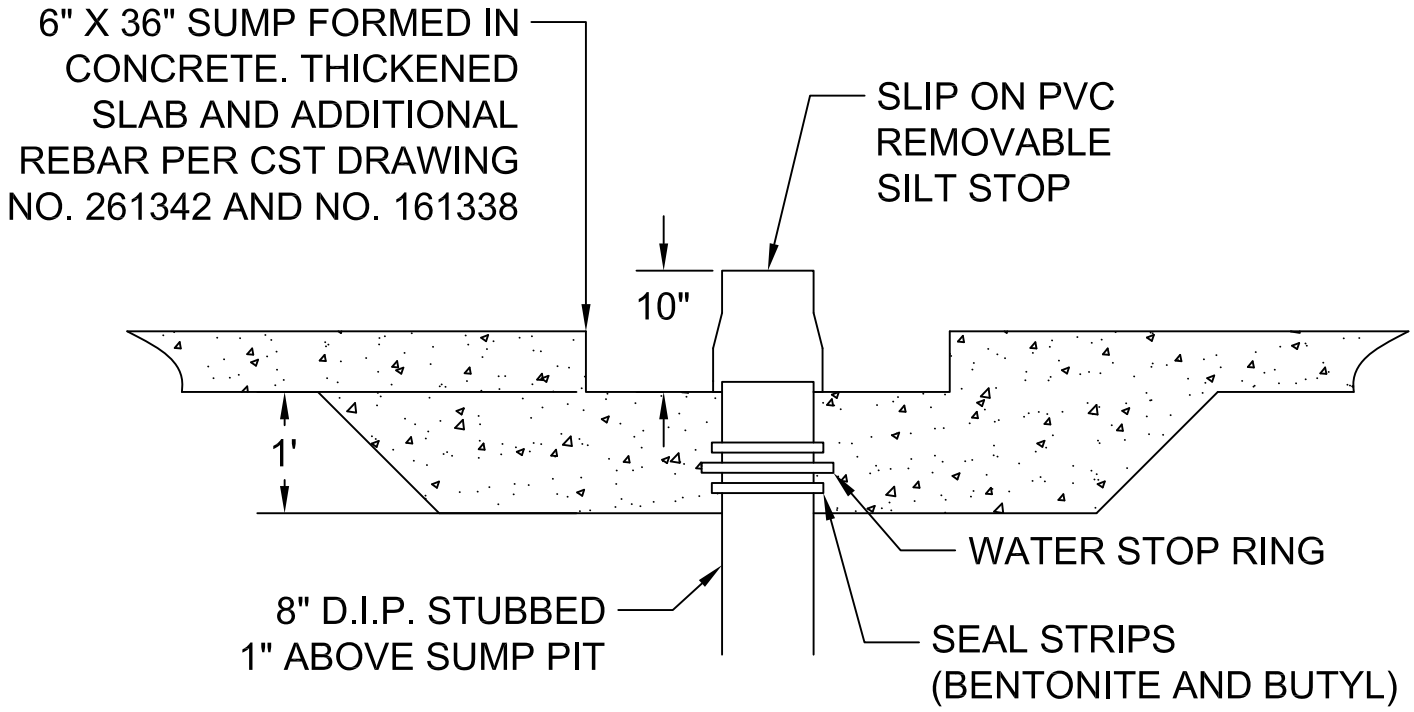

NOTES:

1. 8" DUCTILE IRON PIPE STUBBED 1" ABOVE SUMP FLOOR

DRAWING TITLE	DATE	DWN	CHK'D	
REMOVABLE SILT STOP CONCRETE FLOOR	8/27/14	JH	JM	
	JOB NO. 406256		DWG. NO. 406256	REF. SHEET ST-4
SAND COULEE, MT WATER STORAGE TANK	ENGINEERING AMERICA INC.			

Engineering America

WARRANY/TANK INSPECTIONS

Year One	**Initial tank inspection and cathodic protection validation by Engineering America, Inc. at no cost to Owner**
Year Three	**Tank inspection and cathodic protection validation by Engineering America, Inc. at no cost to Owner**
Year Six	**Tank inspection and cathodic protection validation by Engineering America, Inc. at no cost to Owner**
Year Nine	**Tank inspection and cathodic protection validation by Engineering America, Inc. at no cost to Owner**

****TANK MUST BE DRAINED AND CLEANED PRIOR TO ENGINEERING AMERICA'S ARRIVAL ONSITE****

647 Hale Ave. N.
Oakdale, MN 55128
Ph: 651-777-4041
Fax: 651-777-5312
www.engamerica.com

18900 W 158th Street, Ste. E
Olathe, KS 66062
Ph: 913-782-7774
Fax: 913-782-7776
www.engamerica.com

6706 N Franklin
Loveland, CO 80538
Ph: 970-962-9400
Fax: 970-962-9412
www.engamerica.com

1820 East Ray Road
Chandler, AZ 85225
Ph: 480-895-1106
Fax: 480-802-7704
www.engamerica.com

2966 Industrial Avenue
Hubbard, OR 97032
Ph: 503-320-6891
www.engamerica.com

America's Employee-Owned Leader in Liquid Storage Tank Solutions

647 Hale Ave. N.
Oakdale, MN 55128
Ph: 651-777-4041
Fax: 651-777-5312
www.engamerica.com

18900 W 158th Street, Ste. E
Olathe, KS 66062
Ph: 913-782-7774
Fax: 913-782-7776
www.engamerica.com

6706 N Franklin
Loveland, CO 80538
Ph: 970-962-9400
Fax: 970-962-9412
www.engamerica.com

1820 East Ray Road
Chandler, AZ 85225
Ph: 480-895-1106
Fax: 480-802-7704
www.engamerica.com

2966 Industrial Avenue
Hubbard, OR 97032
Ph: 503-320-6891
www.engamerica.com

Ralph McGillivray

From: Jason Miller <JMiller@engamerica.com>
Sent: Thursday, September 11, 2014 9:40 AM
To: Ralph McGillivray
Cc: bboland56@yahoo.com; Scott Karaffa
Subject: Sand Coulee, MT
Attachments: Inlet-Outlet Rebar Detail.pdf; Sump Rebar Detail.pdf; 08 O & M Owner Requirements 10 Year.pdf

Ralph,

The intent for rebar at Inlet-Outlet pipe penetrations is identical to sump/pipe penetration. See attached.
I just talked with Barry and the material to be used under the slab is 1.5" minus base coarse compacted to 98%. The material under the foundation will be the same but compacted to 95% per Geotechnical 4.2.1 Subgrade and Foundation base. Yes, he will have the Geotech on site to verify subgrade & test.
The letter attached states we will test & validate cathodic at each warrantied inspection by Engineering America.

Jason Miller

Engineering America

Jason Miller- Project Manager
Office: (651)777-4041 MN
Office: (503)682-7600 OR
Cell: (503)746-3357
jmiller@engamerica.com
647 Hale Avenue N., Oakdale, MN 55128
Check us out on the web at www.engamerica.com
America's employee-owned leader in liquid storage tank solutions

Engineering America

WARRANY/TANK INSPECTIONS

Year One	**Initial tank inspection and cathodic protection validation by Engineering America, Inc. at no cost to Owner**
Year Three	**Tank inspection and cathodic protection validation by Engineering America, Inc. at no cost to Owner**
Year Six	**Tank inspection and cathodic protection validation by Engineering America, Inc. at no cost to Owner**
Year Nine	**Tank inspection and cathodic protection validation by Engineering America, Inc. at no cost to Owner**

****TANK MUST BE DRAINED AND CLEANED PRIOR TO ENGINEERING AMERICA'S ARRIVAL ONSITE****

647 Hale Ave. N.
Oakdale, MN 55128
Ph: 651-777-4041
Fax: 651-777-5312
www.engamerica.com

18900 W 158th Street, Ste. E
Olathe, KS 66062
Ph: 913-782-7774
Fax: 913-782-7776
www.engamerica.com

6706 N Franklin
Loveland, CO 80538
Ph: 970-962-9400
Fax: 970-962-9412
www.engamerica.com

1820 East Ray Road
Chandler, AZ 85225
Ph: 480-895-1106
Fax: 480-802-7704
www.engamerica.com

2966 Industrial Avenue
Hubbard, OR 97032
Ph: 503-320-6891
www.engamerica.com

America's Employee-Owned Leader in Liquid Storage Tank Solutions

647 Hale Ave. N.
Oakdale, MN 55128
Ph: 651-777-4041
Fax: 651-777-5312
www.engamerica.com

18900 W 158th Street, Ste. E
Olathe, KS 66062
Ph: 913-782-7774
Fax: 913-782-7776
www.engamerica.com

6706 N Franklin
Loveland, CO 80538
Ph: 970-962-9400
Fax: 970-962-9412
www.engamerica.com

1820 East Ray Road
Chandler, AZ 85225
Ph: 480-895-1106
Fax: 480-802-7704
www.engamerica.com

2966 Industrial Avenue
Hubbard, OR 97032
Ph: 503-320-6891
www.engamerica.com

FOR REFERENCE ONLY

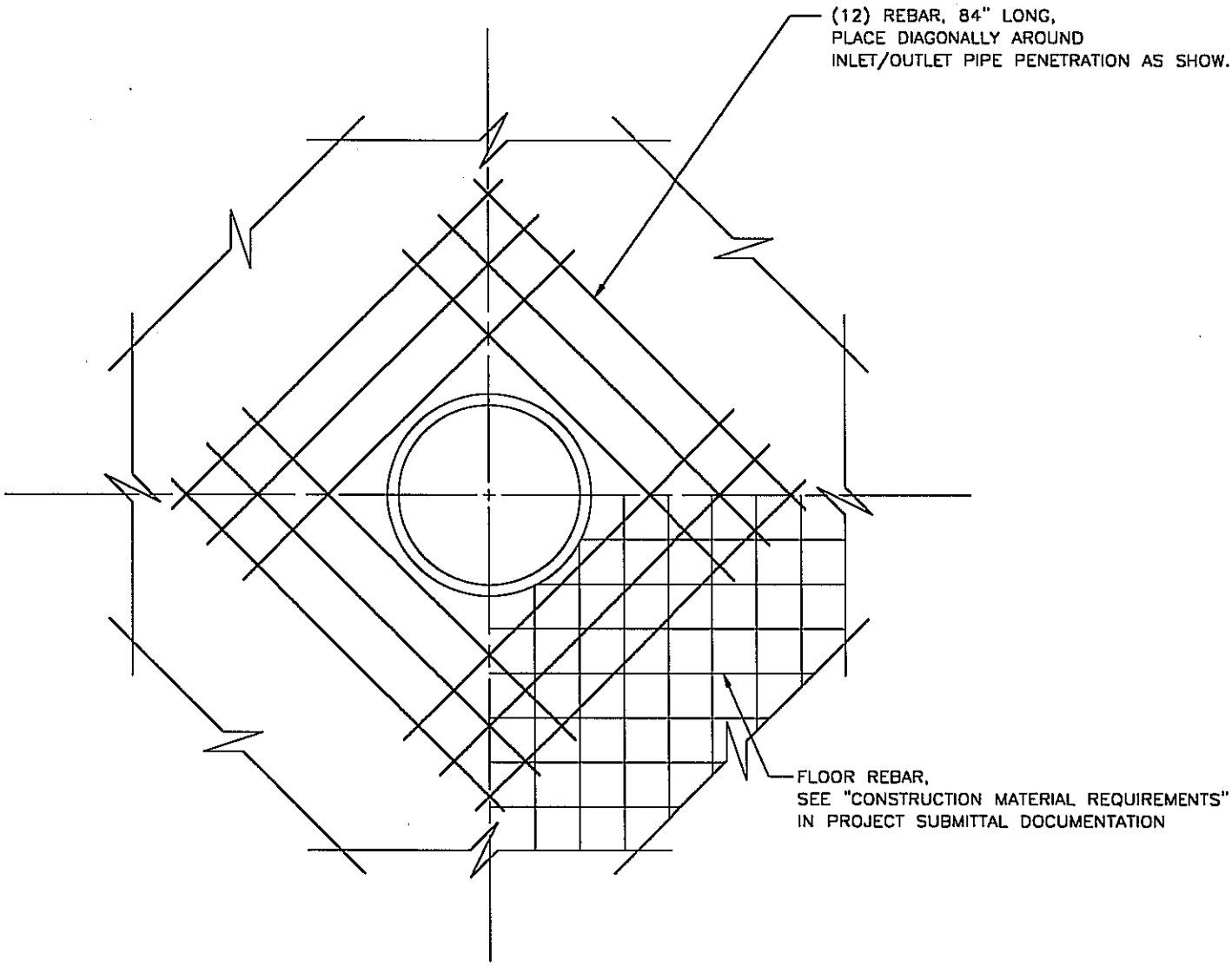

NOTES:
1) REBAR PLACEMENT DETAIL FOR INLET AND OUTLET PIPE.
2)THICKENED CONCRETE ALSO REQUIRED FOR ANY FLOOR PENETRATIONS. SEE CST DWG. NO. 261341 AND DWG. NO. 261342.

ENGINEERING AMERICA, INC.
647 Hale Ave N • Oakdale, MN 55128
PHONE 651-777-4041 • FAX 651-777-5312

SAND COULEE, MT WATER TANK

CONSTRUCTION DETAIL INLET/OUTLET REBAR PLACEMENT
PLAN VIEW CONCRETE FLOOR

DRAWN	JOE H.	DATE	9/11/14	JOB#	406256
CHECKED	JASON M.	SCALE	NA	DWG#	IN/OUT PEN.
APPROVED		SHEET	1 OF 1	REV#	000

FOR REFERENCE ONLY

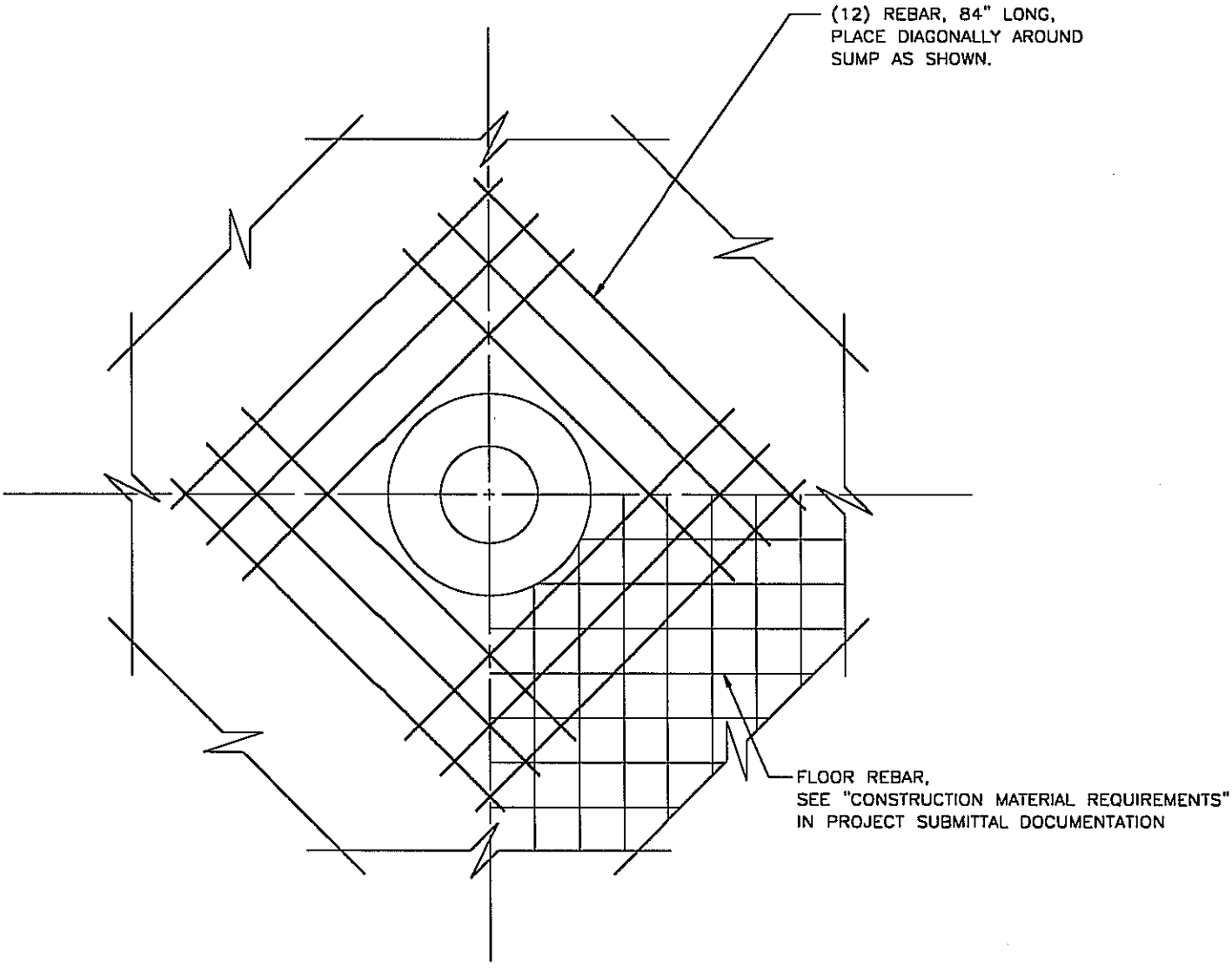

NOTES:
1) THICKENED CONCRETE ALSO REQUIRED FOR ANY FLOOR PENETRATIONS. SEE CST DWG. NO. 261341 AND DWG. NO. 261342.

ENGINEERING AMERICA, INC.
647 Hale Ave N • Oakdale, MN 55128
PHONE 651-777-4041 • FAX 651-777-5312

SAND COULEE, MT WATER TANK

CONSTRUCTION DETAIL SUMP REBAR PLACEMENT
PLAN VIEW CONCRETE FLOOR

DRAWN	JOE H.	DATE	9/11/14	JOB#	406256
CHECKED	JASON M.	SCALE	NA	DWG#	SUMP PEN.
APPROVED		SHEET	1 OF 1	REV#	000

Ralph McGillivray

From: Jason Miller <JMiller@engamerica.com>
Sent: Tuesday, September 09, 2014 4:32 PM
To: Ralph McGillivray; bboland56@yahoo.com; Scott Karaffa
Cc: Bill Barr
Subject: RE: Sand coulee...submittal for test station at Belt water tank, also foundation design
Attachments: Double Manway Platform.pdf; Rebar at Center Sump and Pipe Penetration.pdf

from Geotech report
remove all materials 30' down to bedrock and replace with Structure
No

Ralph,

Per our conversation earlier today.

1.) Structural fill @ tank pad & below footing: Per conversation with Barry Boland earlier today, gravel backfill at tank floor (below floor rebar mat) to be 1 1/2" clear road base material @ 3" depth compacted to 98%.

RE: Geotechnical Analysis, 4.2 EARTHWORK, 4.2.1 Subgrade and Foundation base Preparation- "The site should be excavated down to foundation subgrade, which should be in competent weathered bedrock under most of the tank. Under the southwestern portion of the tank the excavation may be in soil, in which case the soil should be excavated down to bedrock and then replaced with engineered fill back up to foundation grade. This will also remove the clay lens documented in borehole BH-1. The bedrock nature of this site may warrant excavating several inches below foundation grade to allow for placement of a leveling coarse. Leveling coarse material should be clean, well-draining gravel. Prior to placement of structural fill or leveling coarse material the exposed subgrade should be proof rolled with a smooth drum roller in vibratory mode. The structural fill should be compacted in maximum 6-inch thick lifts and compacted to at least 95% of maximum Proctor density. Structural fill should be free draining gravel."

2.) Rebar at pipe penetrations: See detail above & RE: submittal dated 8/20/14 1. Pipe Detail DRWG 261338.

3.) Cathodic Protection: RE: 13208, Water Storage Tank, 5.0 Erection, E. Appurtenances (per AWWA D103, Section 5), 5. a. Cathodic Protection "A passive cathodic protection system will be designed (NACE, accredited corrosion specialist) and supplied by the tank manufacturer."

CST will not provide tank coating warranty if it's not their tank cathodic protection system installed.

4.) Double Manway Platform detail: See detail above.

Regards,
Jason Miller

Engineering America, Inc.
Jason Miller- Project Manager
MN Office: (651)777-4041
OR Office: (503) 682-7600
Cell: (503) 746-3357
jmiller@engamerica.com

-----Original Message-----
From: Ralph McGillivray [mailto:ralphm@nciengineering.com]

Sent: Monday, September 08, 2014 3:33 PM
To: Jason Miller
Cc: Idaho NCI; Jake NCI; 'Scott Karaffa'; barry@bolandconstruction.net; 'Mark Rhodes'
Subject: RE: Sand coulee...submittal for test station at Belt water tank, also foundation design

Jason,
When I was reviewing Belt tank submittal and comparing between the two tanks, Belt tank had lower walls and has a wider diameter, and a higher soil bearing capacity (Belt had 3500#) then Sand Coulee with its 2000 # soils.
The Belt tank had called out larger re-bar size and extra bar and hooks plus
a 3" wider foundation wall then Sand Coulee. Interesting. Also the Belt
rebar sheet showed the extra bar in a detail at the sump. Sand Coulee does not show extra sump bar or any extra bar at the other pipe penetrations.
Both tank floors are suppose to slope into the sump, Belt showed this this design, Sand coulee does not state floor is suppose to slope to sump. Do you want to see the structural submittal we have for Belt? Belt's tank has definitely has more structural capabilities then the Sand Coulee tank.

Thanks
Ralph McGillivray
NCI Engineering
406 453 5478

-----Original Message-----
From: Jason Miller [mailto:JMiller@engamerica.com]
Sent: Monday, September 08, 2014 3:31 PM
To: Ralph McGillivray
Subject: Re: Sand coulee...submittal for test station at Belt water tank, also foundation design

Got it Ralph. I'll get back with you on this ASAP

Thanks

Jason T. Miller
503.746.3357
Project Manager
Engineering America, Inc.

> On Sep 8, 2014, at 4:26 PM, "Ralph McGillivray"
<ralphm@nciengineering.com> wrote:
>
> Jason this is what we got from Shear on cathodic and on a foundation
design with Belt water tank that had the same specification, we anticipate we get the same from Engineering America with tank in Sand Coulee. The Geotech with Sand Coulee will not be designing your tank foundation.
>
> Thanks
> Ralph McGillivray
> NCI Engineering
> 406 453 5478
>
> <SCAN6462_000.pdf>
> <SCAN6461_000.pdf>

Engineering America
647 Hale Ave N
Oakdale, MN 55128
Ph: 651-777-4041 Fax: 651-777-5312
www.engamerica.com

LETTER OF TRANSMITTAL

Date: 8/7/2014	Job No:
Attn: Barry Boland	
RE:Sand Coulee Water System Replacement Project	
Water Tank	
EAI Project#: 406256	

WE ARE To:Ed Boland Construction, Inc.
4701 North Star Blvd
Great Falls, MT 59405

SENDING YOU ☒ Attached ☐ Under separate cover via _____ the following items:

☒ Shop drawings ☐ Plans/Prints ☐ Specifications ☐ Samples ☐ Copy of Letter
☐ Change Order ☐ Request for Information ☐ _____

COPIES	DATE	SECTION	DESCRIPTION
1	8/7/14	13208	Water Tank Submittal
1	8/7/14	13208	Water Tank Accessories

THESE ARE TRANSMITTED as checked below:

☒ For approval ☐ Approved as submitted ☐ Resubmit _____ copies for approval
☒ For your use ☐ Approved as noted ☐ Submit _____ copies for distribution
☐ As requested ☐ Returned for corrections ☐ Return _____ corrected prints

☐ For review and comment
☐ FOR BIDS DUE _____ ☐ PRINTS RETURNED AFTER LOAN TO US

REMARKS Inlcuded is the submittal for the tank and tank accessories.

COPY TO: _____

Best Regards,

Jason Miller

If enclosures are not as noted, kindly notify us at once.

PLEASE INSERT CST STORAGE TANK SUBMITTAL HERE
CST TANK SUBMITTAL: 1409911_r1

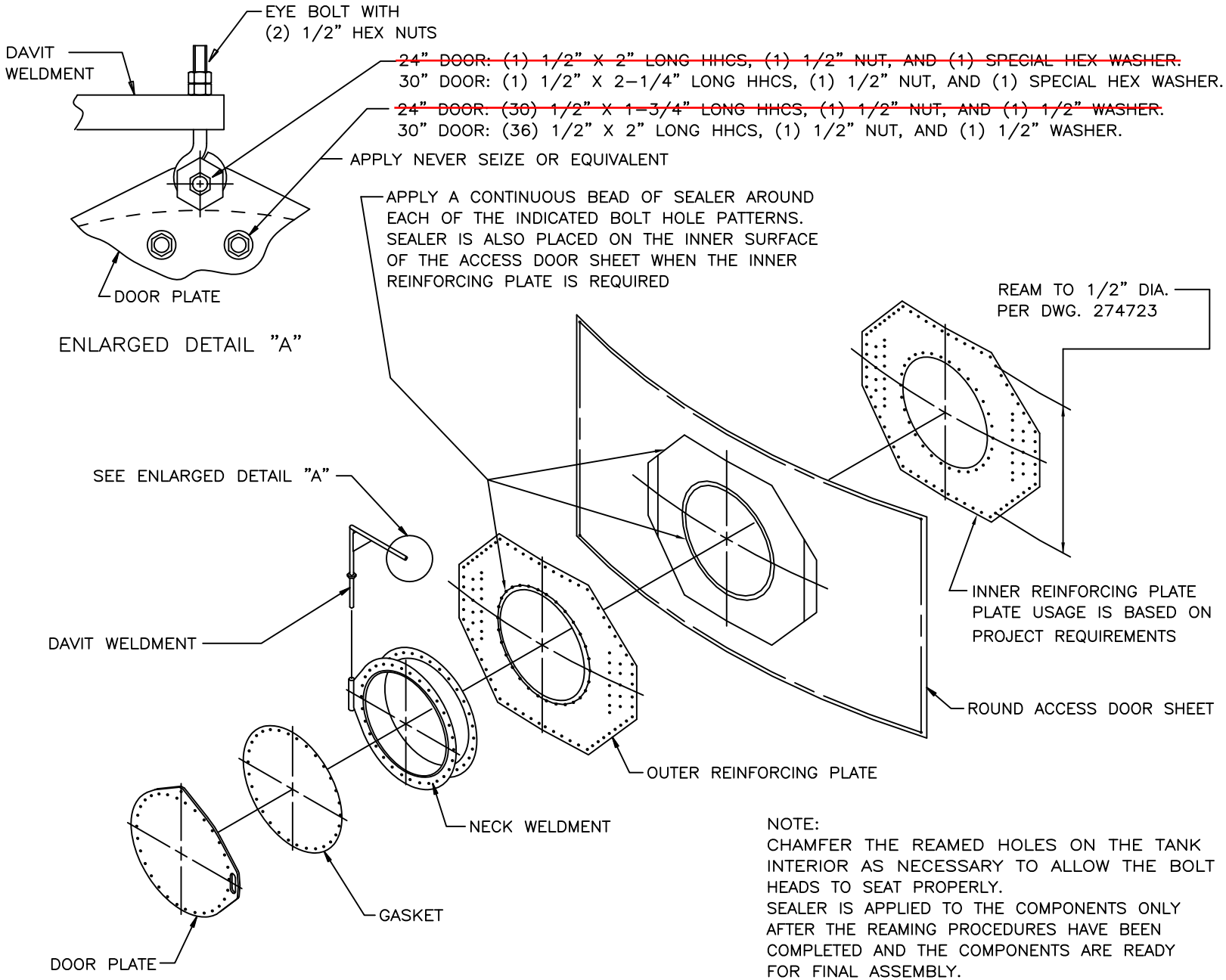

NOTE:
CHAMFER THE REAMED HOLES ON THE TANK INTERIOR AS NECESSARY TO ALLOW THE BOLT HEADS TO SEAT PROPERLY.
SEALER IS APPLIED TO THE COMPONENTS ONLY AFTER THE REAMING PROCEDURES HAVE BEEN COMPLETED AND THE COMPONENTS ARE READY FOR FINAL ASSEMBLY.
SEE DRAWING NUMBER 261337 FOR THE NECK WELDMENT TO ACCESS DOOR SHEET BOLT JOINT.

REL	DESCRIPTION	DR. BY
1	RELEASED FOR PRODUCTION	90034 RKK
2	REVISED COPYRIGHT STATEMENT	91149 DMN
3	REVISED DETAIL "A" TO REFLECT 1/2" EYE BOLT; ADDED 30" DOOR INFORMATION; REMOVED FINISH AND MATERIAL NOTES.	97297 5/12/97 DMA/RKK
4	REMOVED BUSHING PROCEDURE; ADDED REAMING PROCEDURE	00006 01/13/00 TAK/TAK
5	ADDED NEVER SEIZE NOTE	01172 10/23/01 TAK/TAK
6	REVISED COPYRIGHT STATEMENT; REDREW 1/2" HOLES ADDED BLACK STEEL	07314 10/01/07 MMB/DRT
7	REVISED REAMING PROCEDURE	08042 2/20/08 MMB/DRT

To Index

ENGINEERED STORAGE PRODUCTS COMPANY
DEKALB, ILLINOIS 60115

CONFIDENTIAL

THIS DRAWING IS THE PROPRIETARY PROPERTY OF ENGINEERED STORAGE PRODUCTS COMPANY AND SHALL NOT BE USED NOR REPRODUCED WITHOUT THE EXPRESS WRITTEN CONSENT OF THE COMPANY.
ESPC COPYRIGHT ©2008
ALL RIGHTS RESERVED

DRAWN BY DMN
DATE 08/19/91

CONSTRUCTION DETAIL ~~24~~" AND 30" ROUND ACCESS DOORS (W/ DAVIT) INSTALLATION GLASS COATED + BLACK STEEL TANKS

DRWG NO. 261335

To Index

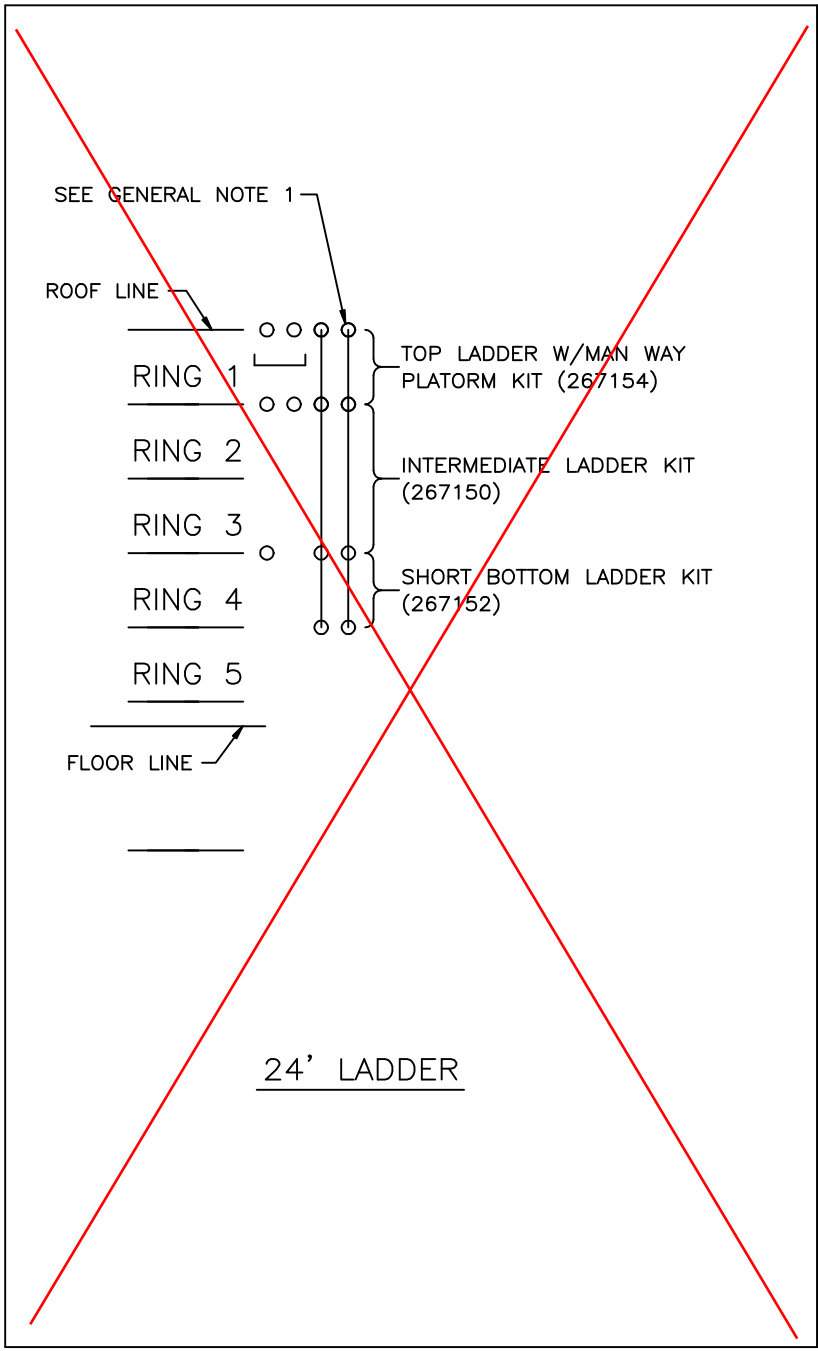

24' LADDER

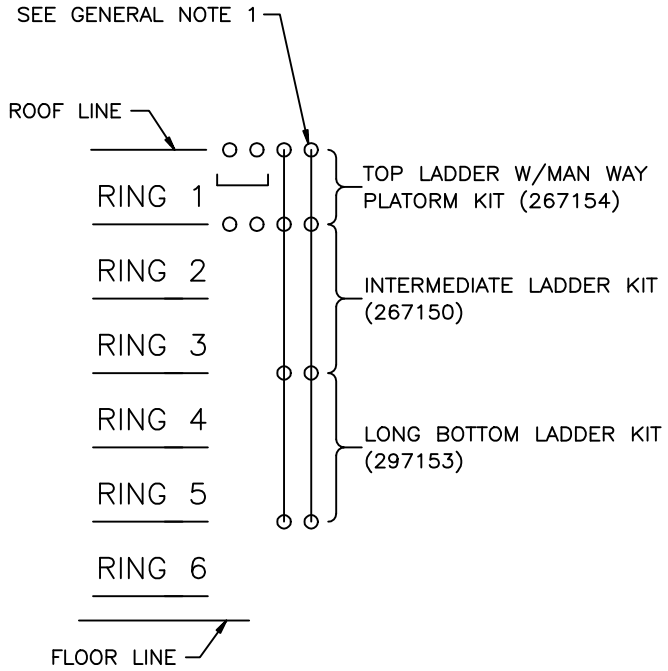

28' LADDER

REL	DESCRIPTION	ECN DR. BY
1	RELEASED FOR PRODUCTION	96108 04/09/96 MCA/RKK
2	UPDATED CONSTRUCTION DWG PART NUMBERS	03100 06/10/03 DRT/ TAK

GENERAL NOTES:
1. BRACKET TYPES ARE SPECIFIED IN THE PROJECT SUBMITTAL DOCUMENTATION.
2. SEE CONSTRUCTION DETAIL DRAWING PART NUMBERS INDICATED FOR DETAILED ASSEMBLY OF EACH LADDER SECTION, WITH SAFETY CAGE.

THIS DRAWING IS NOT TO SCALE.
ALL DIMENSIONS ARE REFERENCE ALLOWING ACCEPTABLE FIELD TOLERANCES TO APPLY.

ENGINEERED STORAGE PRODUCTS COMPANY
DEKALB, ILLINOIS 60115

CONFIDENTIAL
THIS DRAWING IS THE PROPRIETARY PROPERTY OF ENGINEERED STORAGE PRODUCTS COMPANY AND SHALL NOT BE USED NOR REPRODUCED WITHOUT THE EXPRESS WRITTEN CONSENT OF THE COMPANY.
ESPC COPYRIGHT © 2003
ALL RIGHTS RESERVED

DRAWN BY MCA
DATE 04/09/96

CONSTRUCTION DETAIL LADDER AND PLATFORM SCHEMATIC

~~24'~~ AND 28'
NOM. TANK HEIGHT
WATER TANKS

DRWG NO. 264544

To Index

GENERAL NOTES:
1. ALL STEEL COMPONENTS ARE HOT DIP GALVANIZED.
2. FASTEN COMPONENTS TOGETHER USING 3/8" DIA. STAINLESS STEEL HEX HD CAP SCREW SETS. (SETS INCLUDE ITEMS #5, 6, 7, AND 8)
   FASTENER USAGE FOR ASSEMBLY OF THIS SECTION IS AS FOLLOWS:
   SET OF 3/8" X 1" LONG (ITEMS #5, 7, AND 8) AT (37) JOINTS.
   SET OF 3/8" X 1-1/4" LONG (ITEM #6, 7, AND 8) AT (1) JOINT.
3. SHORT "Y" LADDER BRACKET ASSEMBLIES ARE SHOWN FOR REFERENCE ONLY. POSITION OF THE BRACKETS TO BE DETERMINED DURING INSTALLATION. SEE PROJECT SUBMITTAL DOCUMENTATION FOR BRACKET TYPE AND QUANTITY REQUIREMENTS.

   ANY ONE OF THE LADDER SECTIONS ILLUSTRATED ON THE FOLLOWING CONSTRUCTION DETAIL DRAWINGS:
   267147 LADDER SECTION – TOP
   267149 LADDER AND PLATFORM SECTION – OPEN TOP
   267154 LADDER AND MANWAY PLATFORM SECTION
   267150 LADDER SECTION – INTERMEDIATE

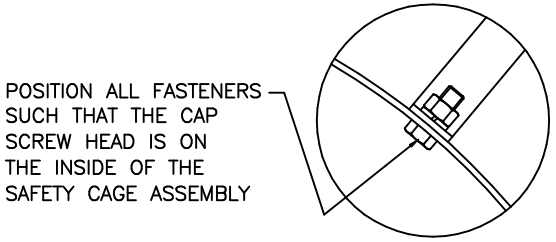

DETAIL "A"

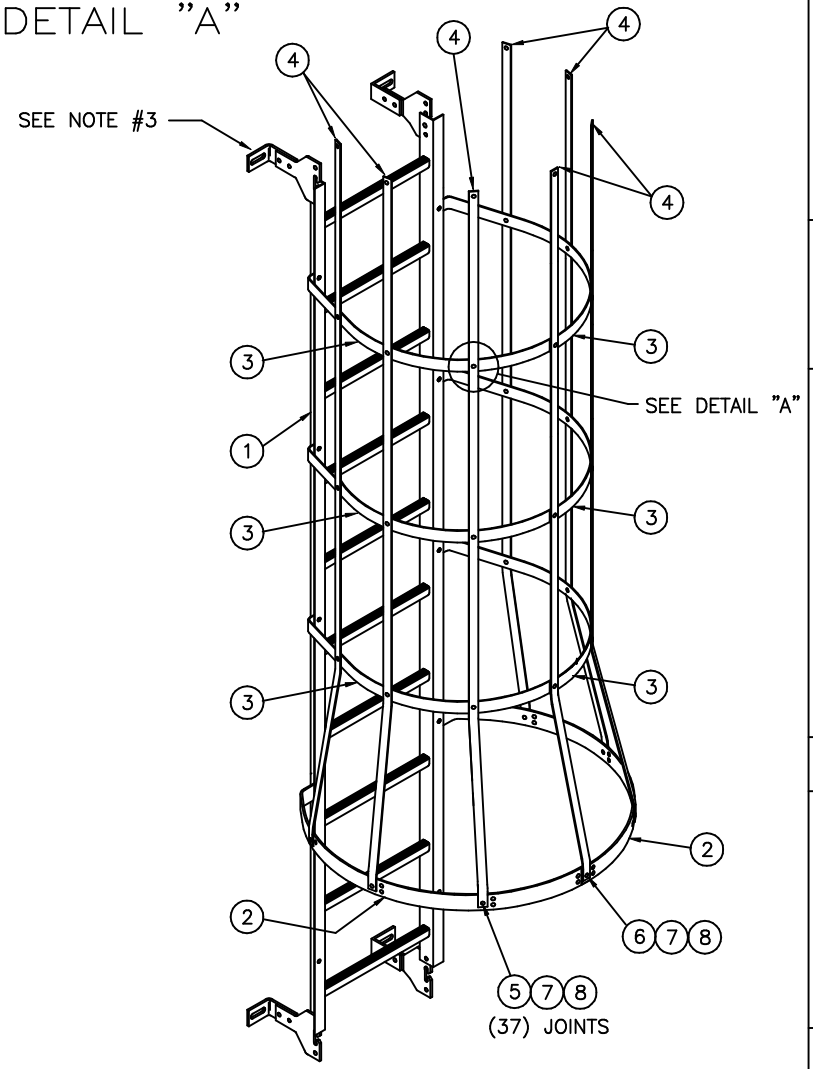

ITEM	DESCRIPTION	QTY
8	NUT, HEX, 3/8"	38
7	WASHER, LOCK, 3/8"	38
6	SCREW, HEX HD CAP, 3/8" x 1 1/4"	1
5	SCREW, HEX HD CAP, 3/8" x 1"	37
4	STRINGER, 1/8" x 1" x 89"	7
3	CAGE RING HALF, 1/8" x 1-1/2" x 13-1/2" R.	6
2	CAGE RING HALF, 3/16" x 3" x 17-1/2" R.	2
1	LADDER ASSEMBLY, INTERMEDIATE	1
--	LONG BOTTOM LADDER & SAFETY CAGE KIT	--

REL	DESCRIPTION	ECN DR. BY
1	RELEASED	03030 02/19/03 DRT/TAK

ENGINEERED STORAGE PRODUCTS COMPANY
DEKALB, ILLINOIS 60115

CONFIDENTIAL
THIS DRAWING IS THE PROPRIETARY PROPERTY OF ENGINEERED STORAGE PRODUCTS COMPANY AND SHALL NOT BE USED NOR REPRODUCED WITHOUT THE EXPRESS WRITTEN CONSENT OF THE COMPANY.
ESPC COPYRIGHT © 2003
ALL RIGHTS RESERVED

DRAWN BY DRT
DATE 02/19/03

CONSTRUCTION DETAIL LADDER SECTION LONG BOTTOM WITH SAFETY CAGE

ALL TANK TYPES

DRWG NO. 267153

To Index

GENERAL NOTES:
1. ALL STEEL COMPONENTS ARE HOT DIP GALVANIZED.
2. FASTEN COMPONENTS TOGETHER USING 3/8" DIA. STAINLESS STEEL HEX HD CAP SCREW SETS. (SETS INCLUDE ITEMS #5, 6, 7, AND 8) FASTENER USAGE FOR ASSEMBLY OF THIS SECTION IS AS FOLLOWS:
   SET OF 3/8" X 1" LONG (ITEMS #5, 7, AND 8) AT (43) JOINTS.
   SET OF 3/8" X 1-1/4" LONG (ITEM #6, 7, AND 8) AT (2) JOINTS.
3. SHORT "Y" LADDER BRACKET ASSEMBLIES ARE SHOWN FOR REFERENCE ONLY. POSITION OF THE BRACKETS TO BE DETERMINED DURING INSTALLATION. SEE PROJECT SUBMITTAL DOCUMENTATION FOR BRACKET TYPE AND QUANTITY REQUIREMENTS.
4. THIS LADDER SECTION IS CONNECTED AT THE TOP TO ANY ONE OF THE LADDER SECTIONS ILLUSTRATED ON THE FOLLOWING CONSTRUCTION DETAIL DRAWINGS:
   267147 LADDER SECTION – TOP
   267149 LADDER AND PLATFORM SECTION – OPEN TOP
   267154 LADDER AND MANWAY PLATFORM SECTION
   267155 LADDER AND STEP-OFF PLATFORM SECTION
   267153 LADDER SECTION – LONG BOTTOM
   267152 LADDER SECTION – SHORT BOTTOM

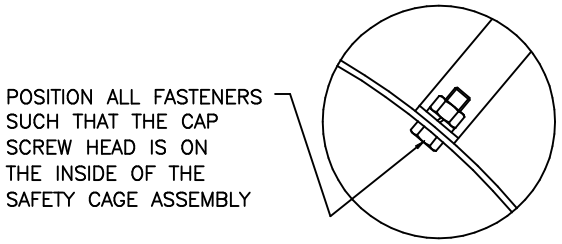

DETAIL "A"

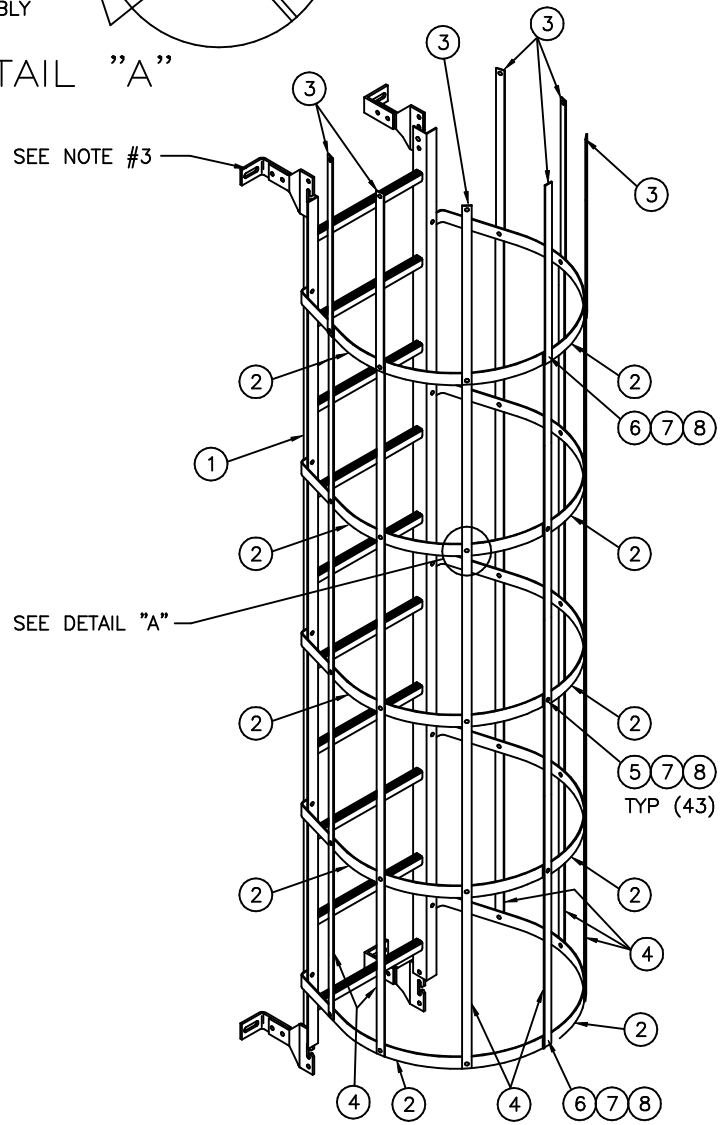

ITEM	DESCRIPTION	QTY
--	INTERMEDIATE LADDER & SAFETY CAGE KIT	--
1	LADDER ASSEMBLY, INTERMEDIATE	1
2	CAGE RING HALF, 3/16" x 1-1/2" x 13-1/2" R.	10
3	STRINGER, 1/8" x 1" x 23"	7
4	STRINGER, 1/8" x 1" x 89"	7
5	SCREW, HEX HD CAP, 3/8" x 1"	43
6	SCREW, HEX HD CAP, 3/8" x 1 1/4"	2
7	WASHER, LOCK, 3/8"	45
8	NUT, HEX, 3/8"	45

REL	DESCRIPTION	ECN DR. BY
1	RELEASED	03030 02/19/03 DRT/TAK

ENGINEERED STORAGE PRODUCTS COMPANY
DEKALB, ILLINOIS 60115

CONFIDENTIAL
THIS DRAWING IS THE PROPRIETARY PROPERTY OF ENGINEERED STORAGE PRODUCTS COMPANY AND SHALL NOT BE USED NOR REPRODUCED WITHOUT THE EXPRESS WRITTEN CONSENT OF THE COMPANY.
ESPC COPYRIGHT © 2003
ALL RIGHTS RESERVED

DRAWN BY DRT
DATE 02/19/03

CONSTRUCTION DETAIL
LADDER SECTION
INTERMEDIATE
WITH SAFETY CAGE

ALL TANK TYPES

DRWG NO. 267150

GENERAL NOTES:

1. ALL STEEL COMPONENTS ARE HOT DIP GALVANIZED.
2. FASTEN COMPONENTS TOGETHER USING 3/8" DIA. STAINLESS STEEL HEX HD CAP SCREW SETS. (SETS INCLUDE ITEMS #9, 10, 11, 12, AND 13) FASTENER USAGE FOR ASSEMBLY OF THIS SECTION IS AS FOLLOWS:
   SET OF 3/8" X 1" LONG (ITEMS #9, 11, 12, AND 13) AT (27) JOINTS.
   SET OF 3/8" X 1–1/4" LONG (ITEM #10, 11, 12, AND 13) AT (4) JOINT.
3. POSITION OF THE PLATFORM BRACKETS TO BE DETERMINED DURING INSTALLATION. SEE PROJECT SUBMITTAL DOCUMENTATION FOR BRACKET TYPE AND QUANTITY REQUIREMENTS.
4. ATTACH (2) CHAIN ASSEMBLIES (ITEM #8) AT THE OPEN SIDE OF THE PLATFORM USING THE FOLLOWING FASTENERS AT EACH CHAIN ASSEMBLY LOCATION:
   (1) SET 3/8" x 1" LG HHCS (ITEMS #9, 11, 12, & 13)
   (1) SET 3/8" DIA. EYE BOLT (ITEMS #7, 11, 12, & 13)
5. THIS LADDER SECTION IS CONNECTED AT THE BOTTOM TO ANY ONE OF THE LADDER SECTIONS ILLUSTRATED ON THE FOLLOWING CONSTRUCTION DETAIL DRAWINGS:
   267150 LADDER SECTION – INTERMEDIATE
   △2 267153 LADDER SECTION – LONG BOTTOM
   267152 LADDER SECTION – SHORT BOTTOM
6. LEFT HAND PLATFORM MOUNT IS SHOWN. DEPENDENT ON SITE REQUIREMENTS, THE PLATFORM MAY BE MOUNTED ON THE RIGHT HAND SIDE OF THE LADDER.

ITEM	DESCRIPTION	QTY
16	STRINGER, 1/8" x 1" x 23"	2
15	CAGE BAND, 1/8" x 1–1/2" x 11"	1
14	CAGE BAND, 1/8" x 1–1/2" x 22–1/2"	3
13	WASHER, FLAT, 3/8"	37
12	NUT, HEX, 3/8"	35
11	WASHER, LOCK, 3/8"	33
10	SCREW, HEX HD CAP, 3/8" x 1–1/4"	4
9	SCREW, HEX HD CAP, 3/8" x 1"	27
8	CHAIN ASSEMBLY	2
7	EYE BOLT, 3/8"	2
6	STRAP, 1/8" x 2" x 30–1/8"	2
5	RAIL, 2" x 2" x 1/8" x 30–1/8"	2
4	GUSSET ANGLE, 2" x 2" x 1/8" x 33–1/8"	2
3	PLATFORM, 30" x 30"	1
2	POST, 2" x 2" x 1/8" x 50–1/4"	2
1	MOUNTING ANGLE, 3" x 3" x 1/4" x 85"	2
--	MANWAY PLATFORM KIT	--

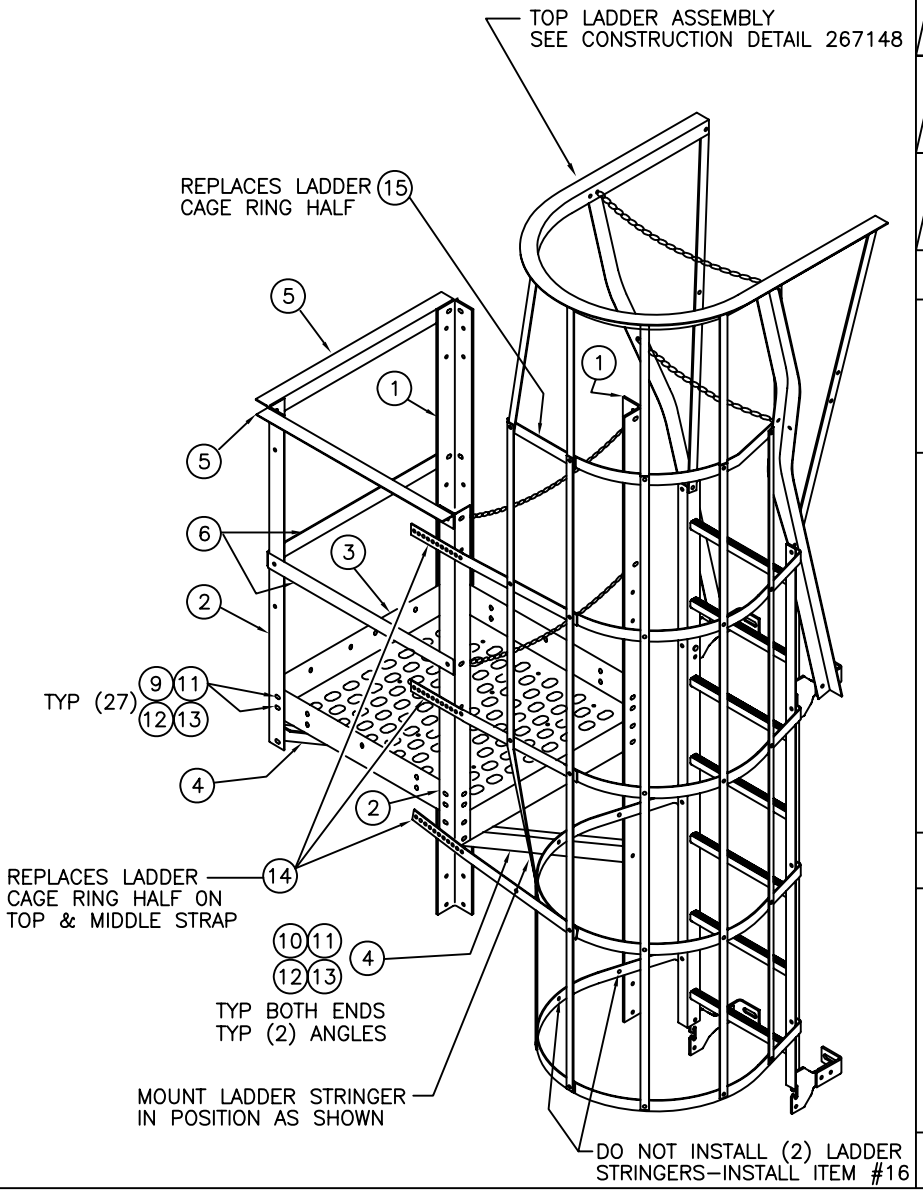

REL	DESCRIPTION	DR. BY
1	RELEASED	03030 02/19/03 DRT/TAK
2	REVISED CONSTR. DRAWING P/N'S	03100 06/13/03 DRT/TAK
3	ADDED CHAIN ASSY'S TO GRAPHIC	05031 02/24/05 DRT/TAK
4	RELOCATED CHAIN ASSY'S TO KING POSTS	06090 04/27/06 DRT/

TechIndex

ENGINEERED STORAGE PRODUCTS COMPANY

DEKALB, ILLINOIS 60115

CONFIDENTIAL

THIS DRAWING IS THE PROPRIETARY PROPERTY OF ENGINEERED STORAGE PRODUCTS COMPANY AND SHALL NOT BE USED NOR REPRODUCED WITHOUT THE EXPRESS WRITTEN CONSENT OF THE COMPANY.

ESPC COPYRIGHT © 2006
ALL RIGHTS RESERVED

DRAWN BY DRT
DATE 02/19/03

CONSTRUCTION DETAIL MANWAY PLATFORM AND TOP LADDER WITH SAFETY CAGE

TANK WITH ROOF

DRWG NO. 267154

To Index

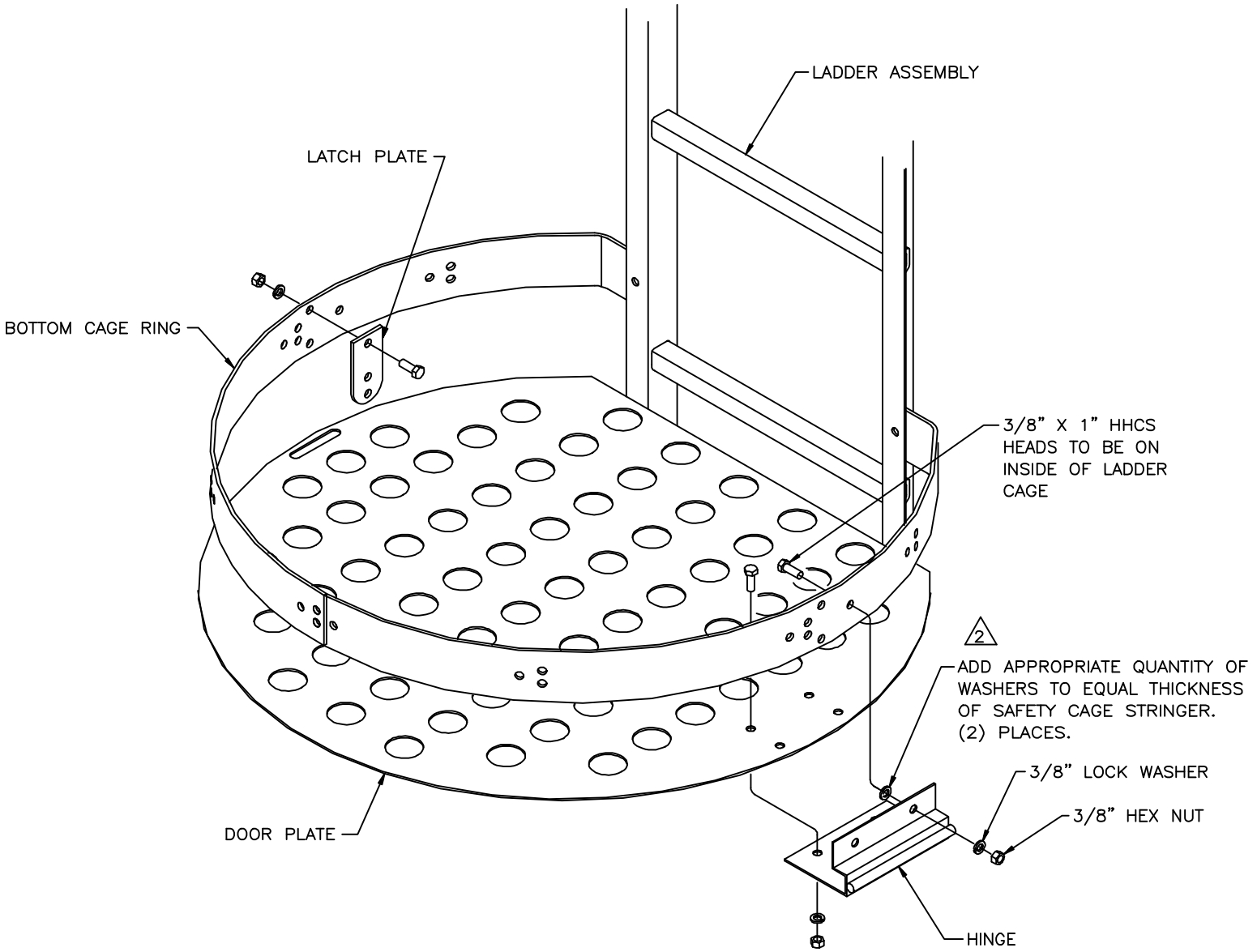

REL	DESCRIPTION	ECN DR. BY
1	RELEASED FOR PRODUCTION	96143 05/03/96 TAK/RKK
2	ADDED "WASHERS" NOTE	96371 12/6/96 DMA/RKK

THIS DRAWING IS NOT TO SCALE.
ALL DIMENSIONS ARE REFERENCE ALLOWING ACCEPTABLE FIELD TOLERANCES TO APPLY.

A.O. SMITH
ENGINEERED STORAGE PRODUCTS COMPANY
DEKALB, ILLINOIS 60115

CONFIDENTIAL
THIS DRAWING IS THE PROPRIETARY PROPERTY OF A.O. SMITH ENGINEERED STORAGE PRODUCTS COMPANY AND SHALL NOT BE USED NOR REPRODUCED WITHOUT THE EXPRESS WRITTEN CONSENT OF THE COMPANY.
AOSESPC COPYRIGHT © 1998
ALL RIGHTS RESERVED

DRAWN BY	TAK
DATE	05/03/96

CONSTRUCTION DETAIL LADDER DOOR ASSEMBLY INSTALLATION

LADDER ASSEMBLIES

DRWG NO. 264773

To Index

THE STRUCTURE BOLT LENGTHS AND QUANTITIES FOR THIS CONSTRUCTION DETAIL DO NOT CONSIDER THE MOUNTING OF THE GUARD RAIL AND WALKWAY, ROOF MANWAY, VENTILATOR AND INSPECTION EQUIPMENT TO THE ROOF ASSEMBLY. SEE THE FOLLOWING CONSTRUCTION DETAIL DRAWINGS FOR THE STRUCTURE BOLT LENGTH AND QUANTITY REQUIREMENTS FOR INSTALLATION OF THESE APPURTENANCES.

DRWG. NO.	CONSTRUCTION DETAIL
261307	GRAVITY VENTILATOR INSTALLATION
263938	ROOF MANWAY INSTALLATION
261892	ROOF GUARD RAIL INSTALLATION
261893	ROOF GUARD RAIL INSTALLATION
261894	ROOF GUARD RAIL INSTALLATION
261895	ROOF GUARD RAIL INSTALLATION
263043	INSPECTION EQUIPMENT
270197	FALL PROTECTION BRACKET INSTALLATION

* OPTIONAL APPURTENANCES
** AS REQUIRED EQUIPMENT

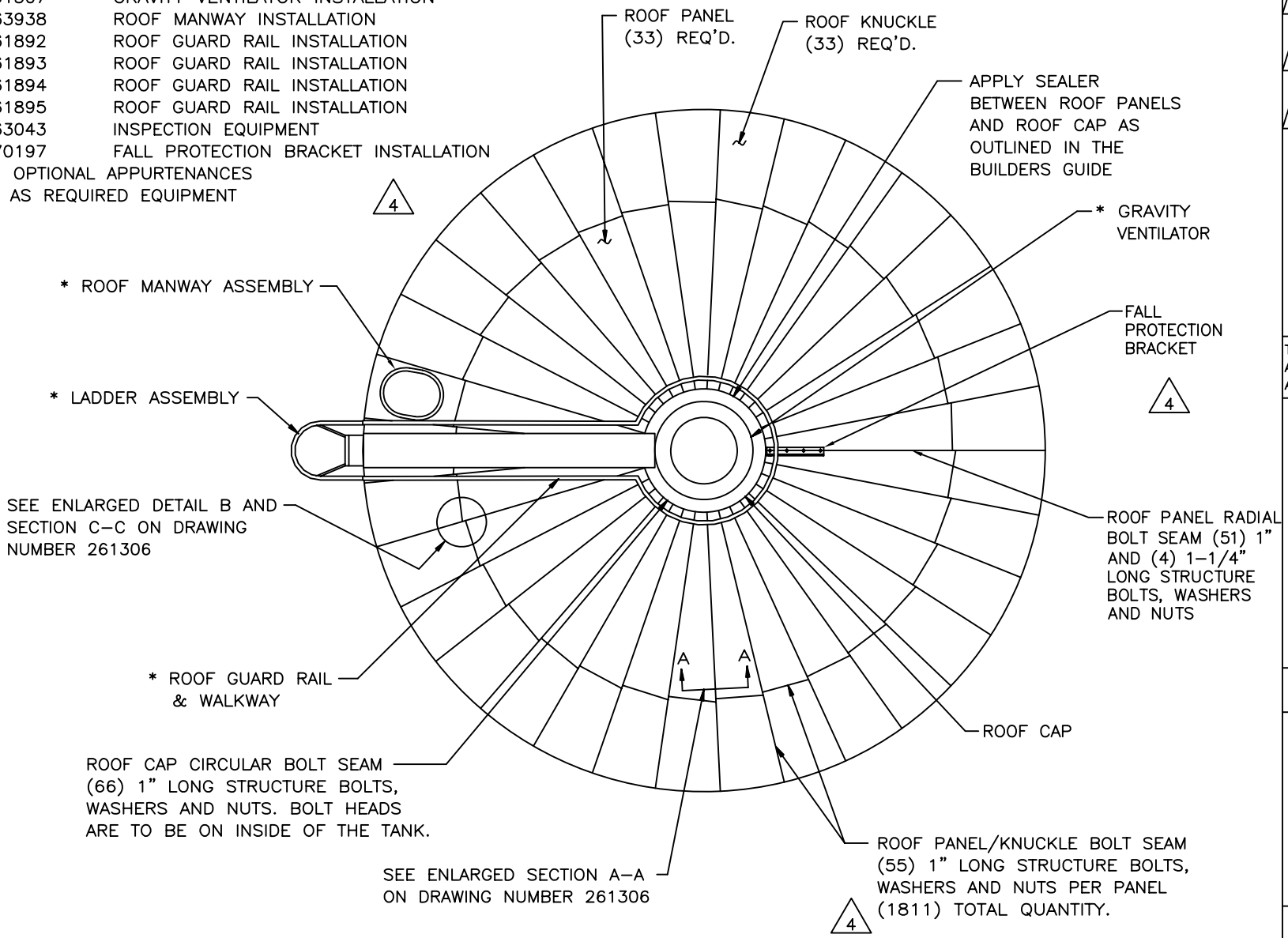

REL	DESCRIPTION	ECN DR. BY
1	RELEASED FOR PRODUCTION	95182 TAK/RKK
2	REVISED INSPECTION EQUIPMENT TO BE AN OPTIONAL APPURTENANCE	00098 TAK/TAK
3	REMOVED INSPECTION EQUIPMENT PER CUSTOMER REQUEST	05136 CGG/MEK
4	ADDED FALL PROTECTION BRACKET	06137 NBE

THIS DRAWING IS NOT TO SCALE. ALL DIMENSIONS ARE REFERENCE IN THAT ACCEPTABLE FIELD TOLERANCES APPLY.

ENGINEERED STORAGE PRODUCTS COMPANY
DEKALB, ILLINOIS 60115

CONFIDENTIAL
THIS DRAWING IS THE PROPRIETARY PROPERTY OF ENGINEERED STORAGE PRODUCTS COMPANY AND SHALL NOT BE USED NOR REPRODUCED WITHOUT THE EXPRESS WRITTEN CONSENT OF THE COMPANY.
ESPC COPYRIGHT © 2003
ALL RIGHTS RESERVED

DRAWN BY TAK
DATE 08/22/95

CONSTRUCTION DETAIL ROOF ASSEMBLY

20° SLOPED ROOF 31' DIAMETER

DRWG NO. 263937

To Index

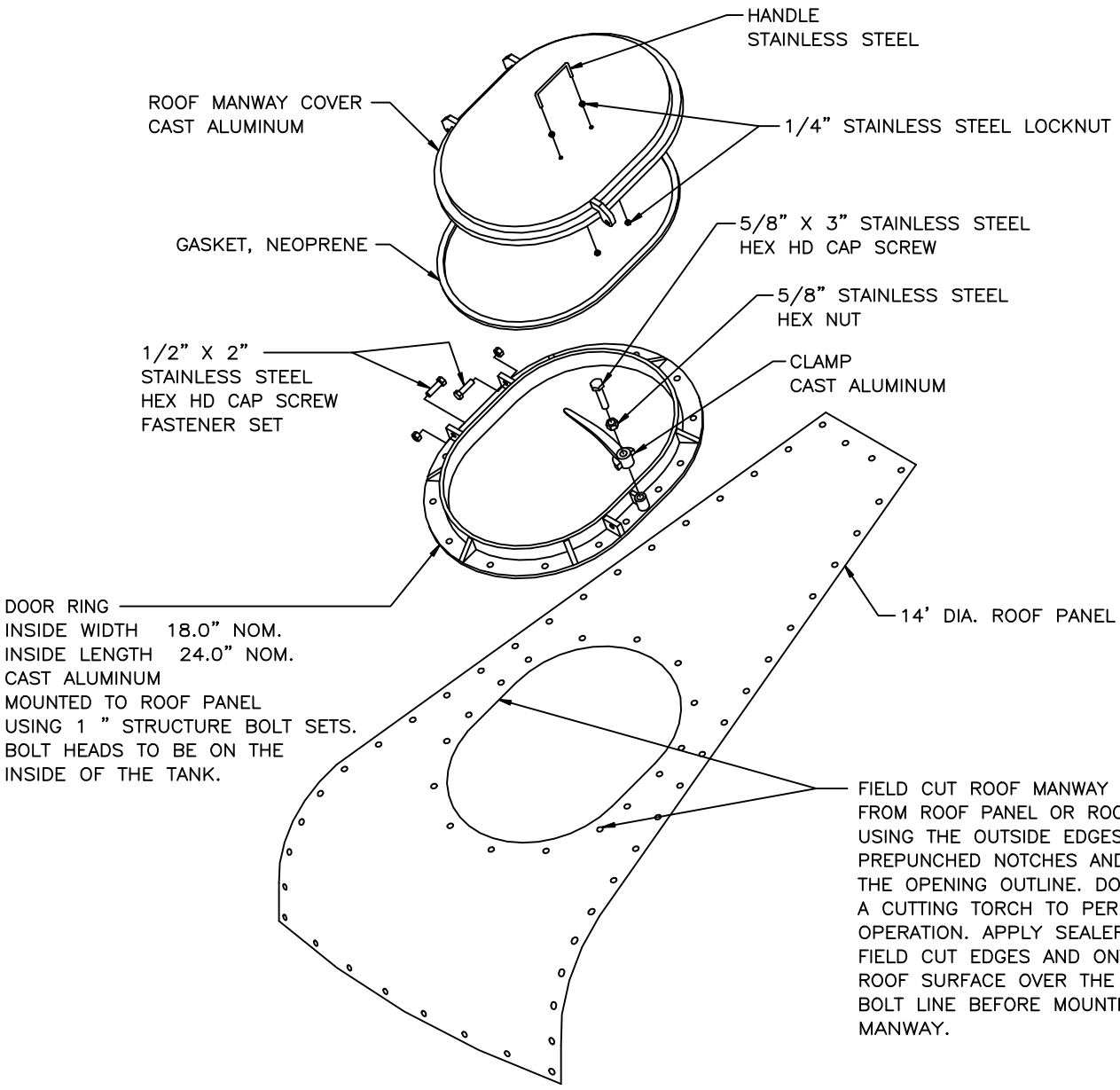

REL	DESCRIPTION	ECN DR. BY
1	RELEASED FOR PRODUCTION	95182 TAK/RKK
2	REVISED FASTENER LENGTH & GRAPHICS	95256 TAK/RKK
3	ADDED 34' & 36' DIA. ROOF APPLICATIONS	02048 03/22/02 TAK/TAK
4	ADDED 39' – 53' DIA. ROOF APPLICATIONS	02121 08/22/02 TAK/TAK
5	REMOVED 34' – 53' DIA. ROOF APPLICATIONS	03114 07/22/03 TAK/TAK

THIS DRAWING IS NOT TO SCALE.
ALL DIMENSIONS ARE REFERENCE ALLOWING ACCEPTABLE FIELD TOLERANCES TO APPLY.

ENGINEERED STORAGE PRODUCTS COMPANY
DEKALB, ILLINOIS 60115

CONFIDENTIAL
THIS DRAWING IS THE PROPRIETARY PROPERTY OF ENGINEERED STORAGE PRODUCTS COMPANY AND SHALL NOT BE USED NOR REPRODUCED WITHOUT THE EXPRESS WRITTEN CONSENT OF THE COMPANY.
ESPC COPYRIGHT © 2002
ALL RIGHTS RESERVED

DRAWN BY TAK
DATE 08/22/95

CONSTRUCTION DETAIL ROOF MANWAY INSTALLATION ONTO ROOF PANEL 20° SLOPED ROOF 14' THRU 31' DIA.

DRWG NO. 263938

To Index

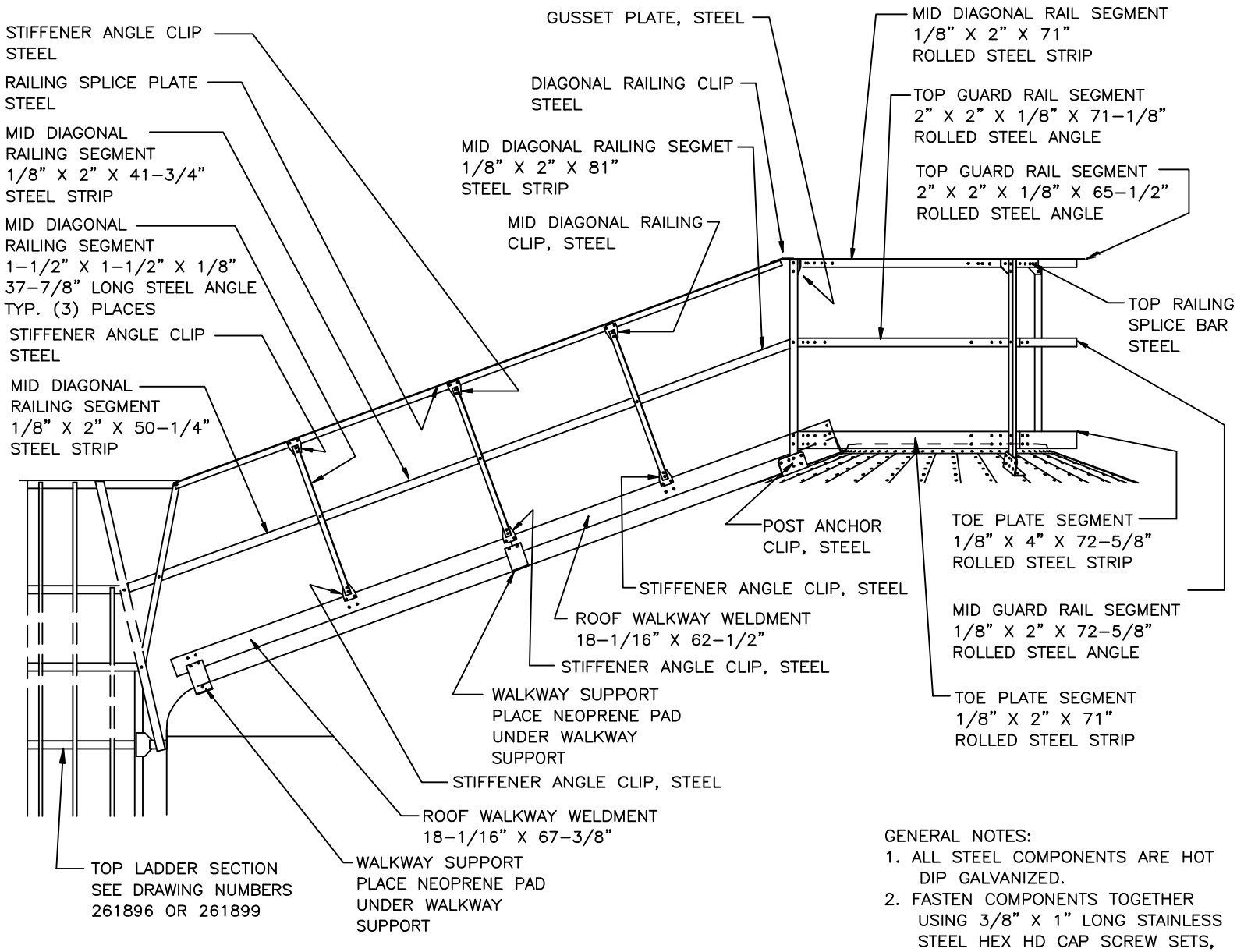

GENERAL NOTES:
1. ALL STEEL COMPONENTS ARE HOT DIP GALVANIZED.
2. FASTEN COMPONENTS TOGETHER USING 3/8" X 1" LONG STAINLESS STEEL HEX HD CAP SCREW SETS, UNLESS OTHERWISE SPECIFIED.

REL	DESCRIPTION	ECN DR. BY
1	RELEASED FOR PRODUCTION	90034 DMN
2	REVISED COPYRIGHT STATEMENT; ADDED TOP LADDER REF. DRWG. P/N'S; AND FASTENER SPECS. TO GENERAL NOTES; RELOCATED ASSOC. DOC'S. NOTE	91149 DMN

ASSOCIATED DOCUMENTS:
261893 PLAN VIEW
261894 DETAILS "A" & "B"
261895 DETAILS "C" & "D"

A.O. SMITH
ENGINEERED STORAGE PRODUCTS COMPANY
DEKALB, ILLINOIS 60115

CONFIDENTIAL
THIS DRAWING IS THE PROPRIETARY PROPERTY OF A.O. SMITH ENGINEERED STORAGE PRODUCTS COMPANY AND SHALL NOT BE USED NOR REPRODUCED WITHOUT THE EXPRESS WRITTEN CONSENT OF THE COMPANY.
AOSESPC COPYRIGHT © 1998
ALL RIGHTS RESERVED

DRAWN BY DMN
DATE 4/90

CONSTRUCTION DETAIL ROOF GUARD RAIL ASSEMBLY

31' DIAMETER ELEVATION VIEW

DRWG NO. 261892

To Index

NOTE:
APPLY SEALER BETWEEN ALL GUARD RAIL MOUNTING BRACKETS AND ROOF PANELS AS OUTLINED IN THE BUILDERS GUIDE.

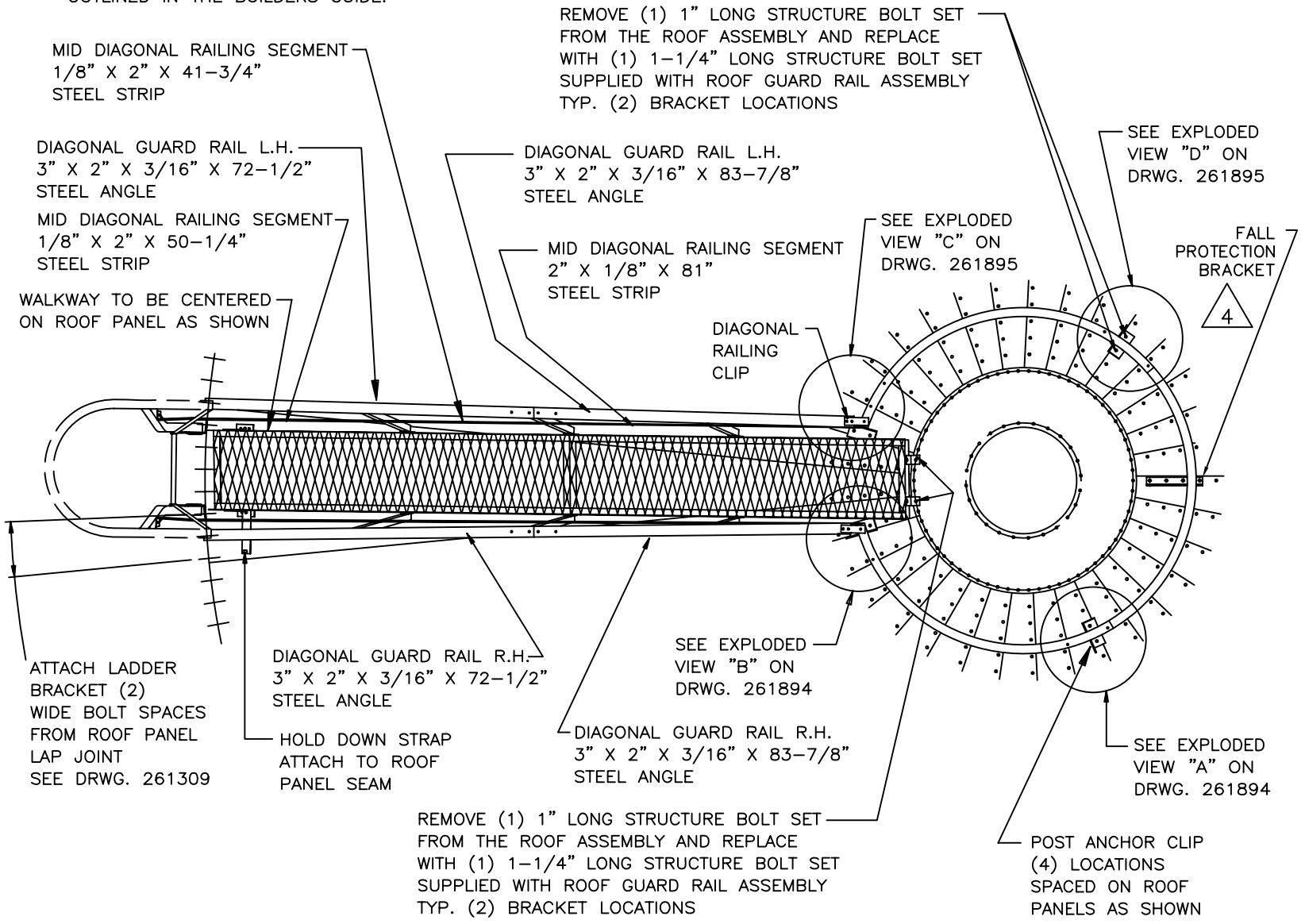

REL	DESCRIPTION	ECN DR. BY
1	RELEASED FOR PRODUCTION	90034 DMN
2	REVISED COPYRIGHT STATEMENT; AND RELOCATED ASSOC. DOC'S. NOTE; ADDED WALKWAY NOTE; CORRECTED VIEW "C" DRAWING NO.	91149 DMN
3	REVISED DIAGONAL GUARD DIMENSIONS	00082 JTF/TAK
4	ADDED FALL PROTECTION BRACKET	06137 NBE 06/08/06

ASSOCIATED DOCUMENTS:
261892 ELEVATION VIEW
261894 DETAILS "A" & "B"
261895 DETAILS "C" & "D"

ENGINEERED STORAGE PRODUCTS COMPANY
DEKALB, ILLINOIS 60115

CONFIDENTIAL
THIS DRAWING IS THE PROPRIETARY PROPERTY OF ENGINEERED STORAGE PRODUCTS COMPANY AND SHALL NOT BE USED NOR REPRODUCED WITHOUT THE EXPRESS WRITTEN CONSENT OF THE COMPANY.
ESPC COPYRIGHT © 2003
ALL RIGHTS RESERVED

DRAWN BY DMN
DATE 4/90

CONSTRUCTION DETAIL ROOF GUARD RAIL ASSEMBLY

31' DIAMETER PLAN VIEW

DRWG NO. 261893

To Index

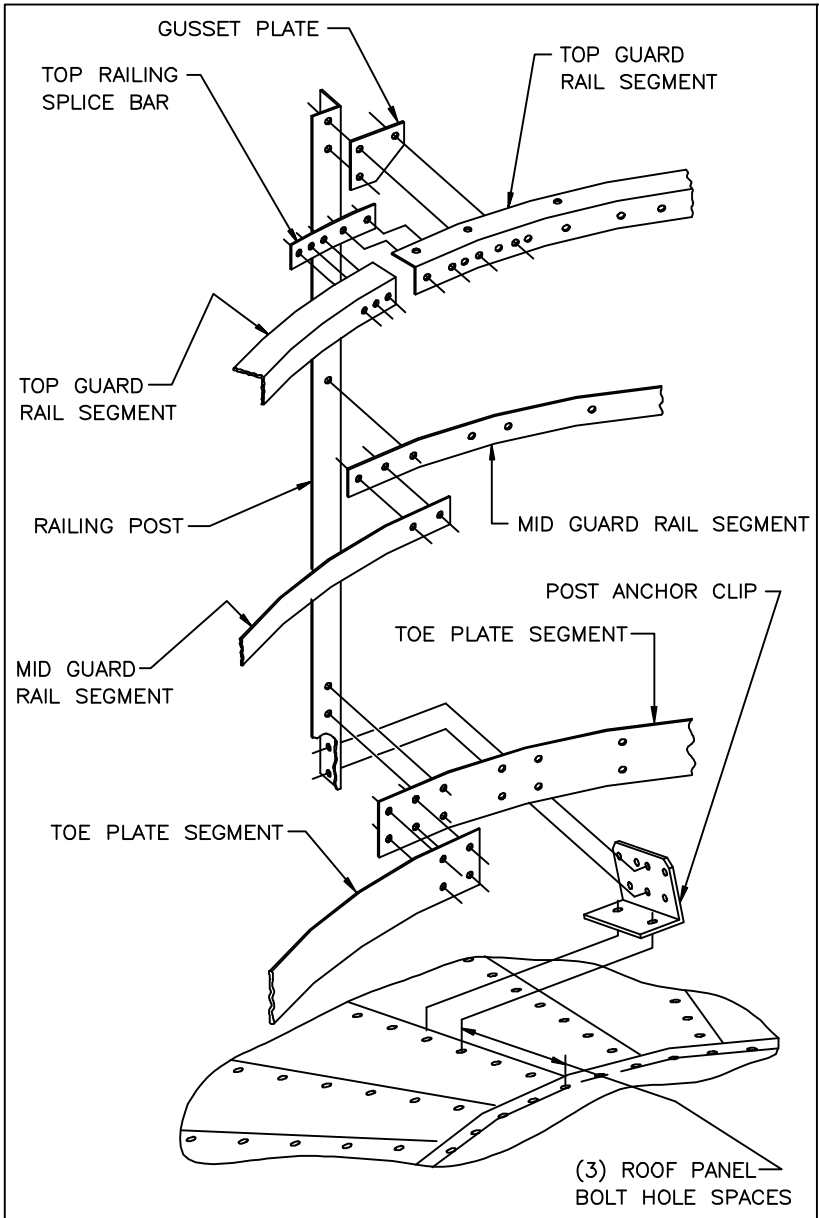

VIEW "A"
RAILING POST EXPLODED VIEW
AS VIEWED FROM INSIDE GUARD RAIL ASSEMBLY

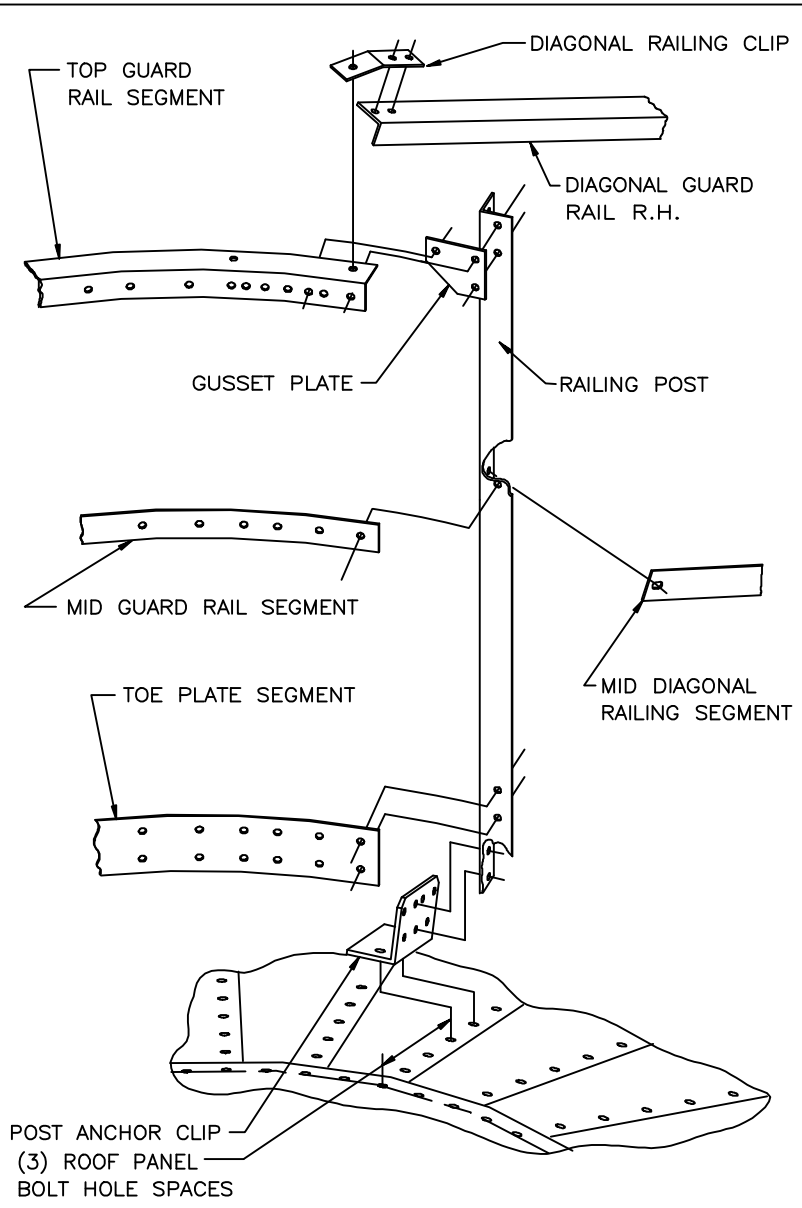

VIEW "B"
RAILING POST EXPLODED VIEW
AS VIEWED FROM INSIDE GUARD RAIL ASSEMBLY

REL	DESCRIPTION	ECN DR. BY
1	RELEASED FOR PRODUCTION	90034 DMN
2	REVISED COPYRIGHT STATEMENT; AND ADDED ASSOCIATED DOCUMENTS NOTE	91149 DMN
3	REMOVED MID DIAGONAL RAILING CLIP FROM VIEW "B".	94205 MCA
4	REVISED DIAGONAL GUARD DESCRIPTION	00082 JTF/TAK
5	CORRECTED POSITION OF POST ANCHOR CLIP IN VIEW "A"	01011 TAK / TAK

ASSOCIATED DOCUMENTS:
261892 ELEVATION VIEW
261893 PLAN VIEW
261895 DETAILS "C" & "D"

A.O. SMITH
ENGINEERED STORAGE PRODUCTS COMPANY
DEKALB, ILLINOIS 60115

CONFIDENTIAL
THIS DRAWING IS THE PROPRIETARY PROPERTY OF A.O. SMITH ENGINEERED STORAGE PRODUCTS COMPANY AND SHALL NOT BE USED NOR REPRODUCED WITHOUT THE EXPRESS WRITTEN CONSENT OF THE COMPANY.
AOSESPC COPYRIGHT © 1998
ALL RIGHTS RESERVED

DRAWN BY DMN
DATE 4/90

CONSTRUCTION DETAIL ROOF GUARD RAIL ASSEMBLY

31' DIAMETER VIEWS "A" AND "B"

DRWG NO. 261894

To Index

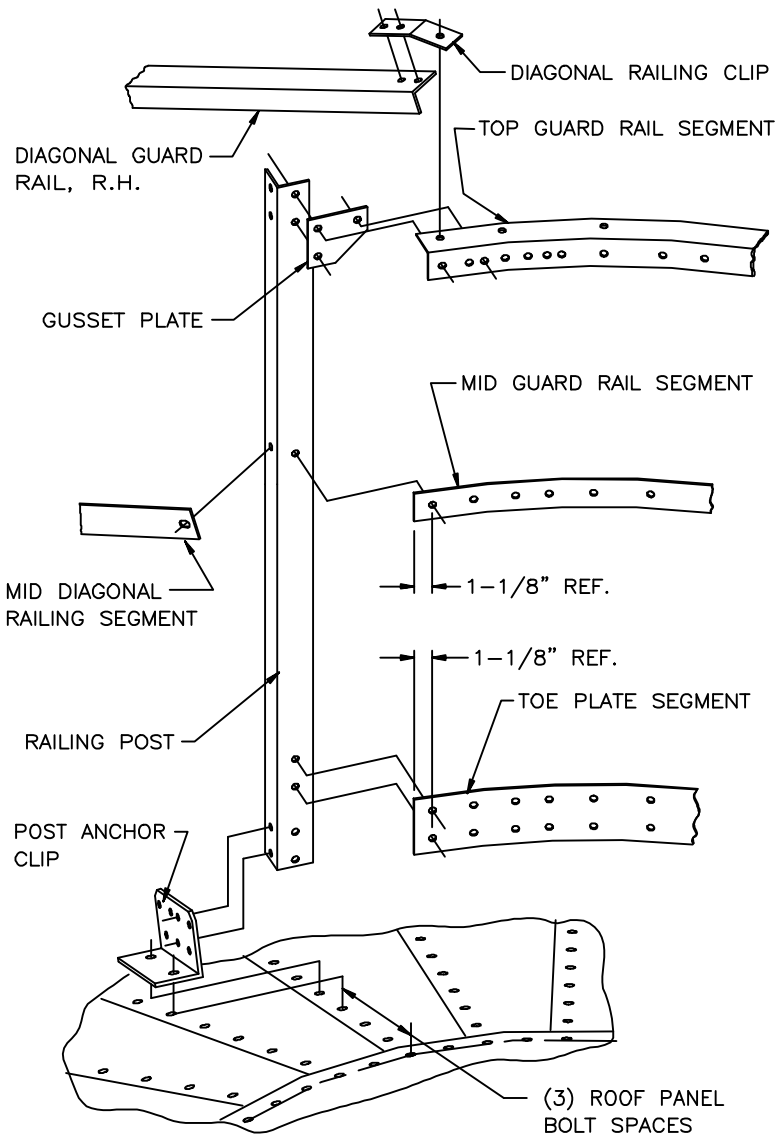

VIEW "C"
RAILING POST EXPLODED VIEW
AS VIEWED FROM INSIDE GUARD RAIL ASSEMBLY

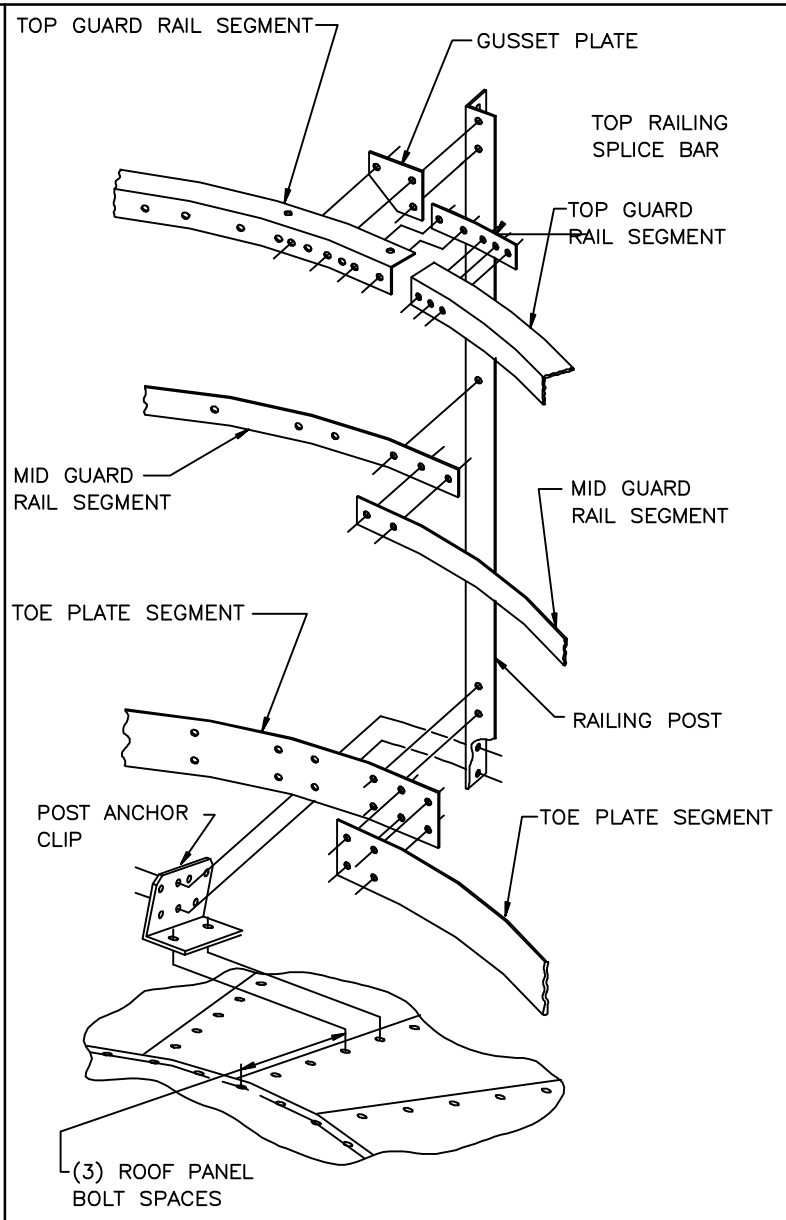

VIEW "D"
RAILING POST EXPLODED VIEW
AS VIEWED FROM INSIDE GUARD RAIL ASSEMBLY

REL	DESCRIPTION	ECN DR. BY
1	RELEASED FOR PRODUCTION	90034 DMN
2	REVISED COPYRIGHT STATEMENT; AND ADDED ASSOCIATED DOCUMENTS NOTE	91149 DMN
3	REMOVED MID DIAGONAL RAILING CLIP FROM VIEW "C"	94205 MCA

ASSOCIATED DOCUMENTS:
261892 ELEVATION VIEW
261893 PLAN VIEW
261894 DETAILS "A" & "B"

A.O. SMITH
ENGINEERED STORAGE PRODUCTS COMPANY
DEKALB, ILLINOIS 60115

CONFIDENTIAL
THIS DRAWING IS THE PROPRIETARY PROPERTY OF A.O. SMITH ENGINEERED STORAGE PRODUCTS COMPANY AND SHALL NOT BE USED NOR REPRODUCED WITHOUT THE EXPRESS WRITTEN CONSENT OF THE COMPANY.
AOSESPC COPYRIGHT © 1998
ALL RIGHTS RESERVED

DRAWN BY DMN
DATE 4/90

CONSTRUCTION DETAIL ROOF GUARD RAIL ASSEMBLY

31' DIAMETER VIEWS "C" AND "D"

DRWG NO. 261895

VENT CAPACITY CHART						
VENT THROAT DIAMETER	1.445 SQUARE FEET					
FLOW IN (CFM)	578	867	1156	1445	4335	7225
PRESSURE DIFFERENCE IN (IN–H20)	.006	.013	.023	.036	.325	.903

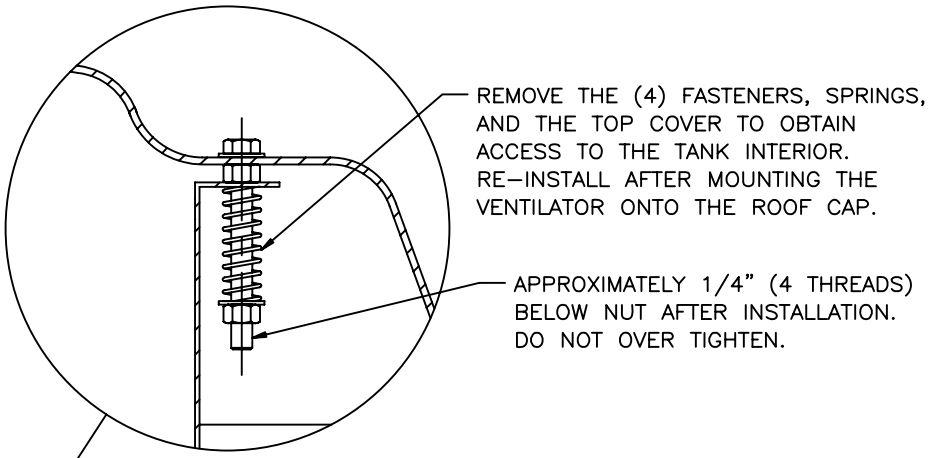

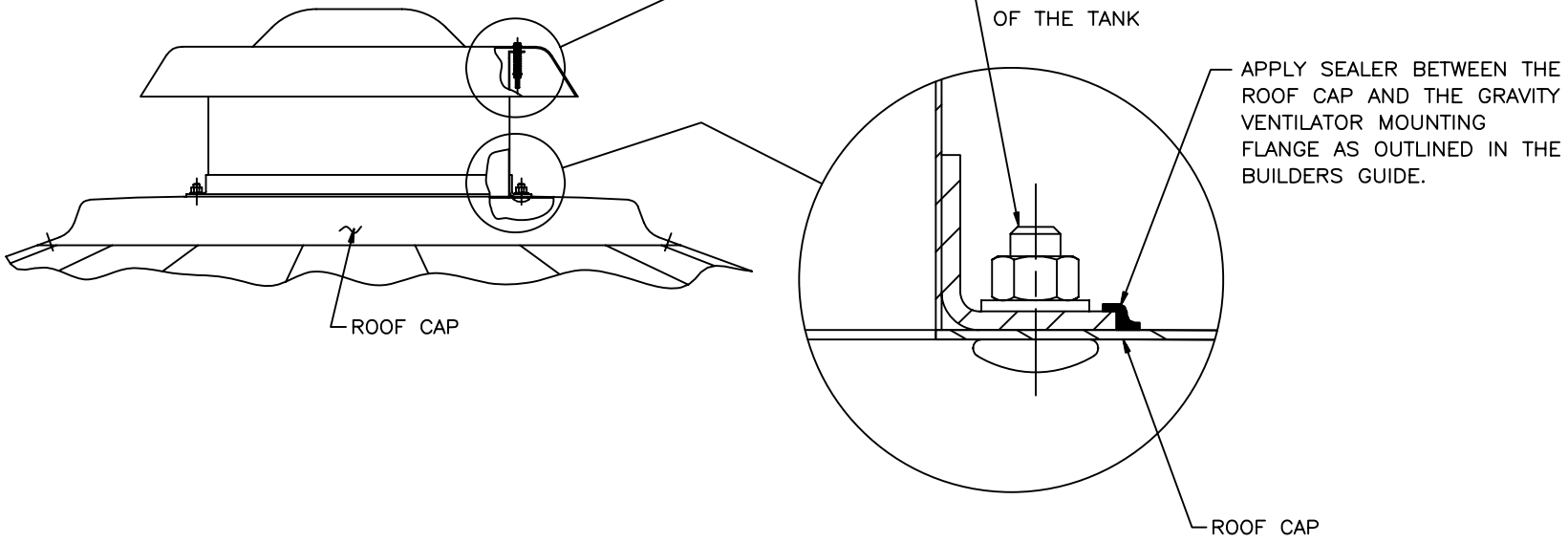

GRAVITY VENTILATOR GENERAL CONSTRUCTION

HOUSING COVER AND SUPPORT MEMBERS – ALUMINUM

INSECT SCREEN – 23 TO 25 MESH .0135"/.0145" DIA. POLYESTER MONOFILAMENT WIRE

BIRD SCREEN – .063 THICK ALUMINUM, .5 X .75 EXPANDED MESH

REL	DESCRIPTION	DR. BY
1	RELEASED FOR PRODUCTION	90034 RKK
2	REVISED COPYRIGHT STATEMENT	91149 DMN
3	ADDED TOP COVER FASTENING DETAIL	99070 TAK
4	ADDED 34' & 36' DIA. ROOF APPLICATIONS	02048 03/22/02 TAK/TAK
5	ADDED 39' – 53' DIA. ROOF APPLICATIONS	02121 08/22/02 TAK/TAK
6	REMOVED 34'–53' DIA. ROOF APPLICATIONS	03114 07/22/03 TAK/TAK
7	UPDATED CAPACITY CHART TO CURRENT SPECIFICATIONS.	06174 07/13/06 NBE/DRT

TechIndex

ENGINEERED STORAGE PRODUCTS COMPANY
DEKALB, ILLINOIS 60115

CONFIDENTIAL
THIS DRAWING IS THE PROPRIETARY PROPERTY OF ENGINEERED STORAGE PRODUCTS COMPANY AND SHALL NOT BE USED NOR REPRODUCED WITHOUT THE EXPRESS WRITTEN CONSENT OF THE COMPANY.
ESPC COPYRIGHT © 2002
ALL RIGHTS RESERVED

DRAWN BY	DMN
DATE	08/13/91

CONSTRUCTION DETAIL GRAVITY VENTILATOR INSTALLATION ONTO ROOF CAP 20° SLOPED ROOF 14' THRU 31' DIA.

DRWG NO. 261307

PART NUMBER	TRX SIZE	INLET SQ. FT.	SHIP WT.	VELOCITY (FPM) 400	500	600	700	800	900	1000
				PRESSURE DROP FOR EXHAUST .025	.035	.050	.070	.090	.120	.155
				PRESSURE DROP FOR SUPPLY .06	.09	.13	.18	.24	.30	.38
				CFM	CFM	CFM	CFM	CFM	CFM	CFM
255469-000	24"	3.14	75 LBS.	1258	1570	1885	2200	2515	2830	3140

10 10

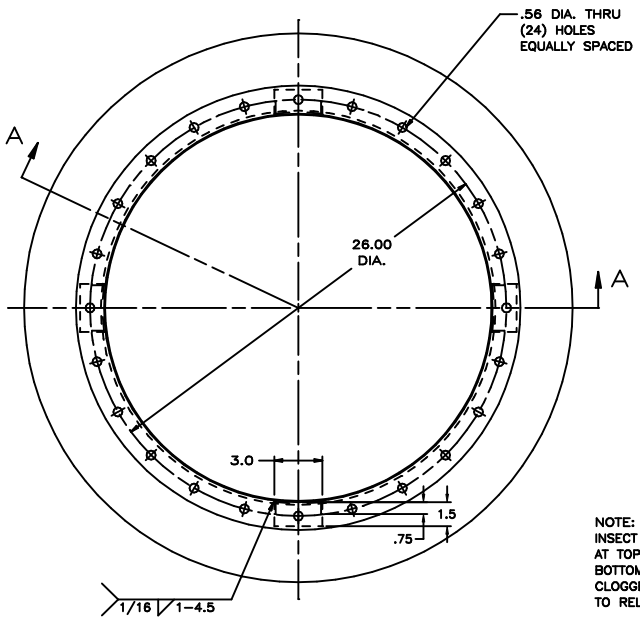

VIEW B-B

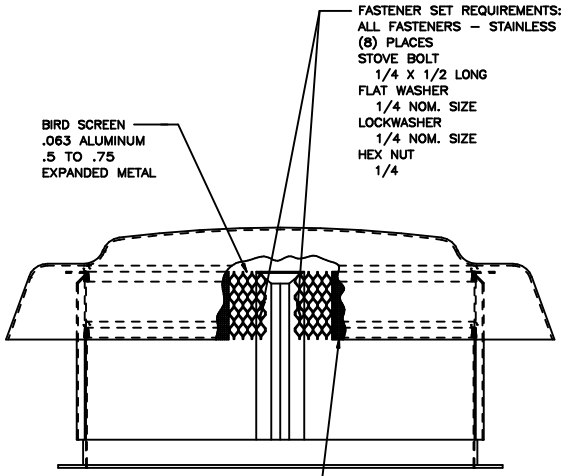

NOTE:
INSECT SCREEN SHOULD BE SNUG AGAINST CAP AT TOP AND TUCKED UNDER BIRD SCREEN AT BOTTOM SUCH THAT IF THE INSECT SCREEN IS CLOGGED WITH ICE, IT CAN DEFLECT INWARD TO RELIEVE A VACUUM PRESSURE.

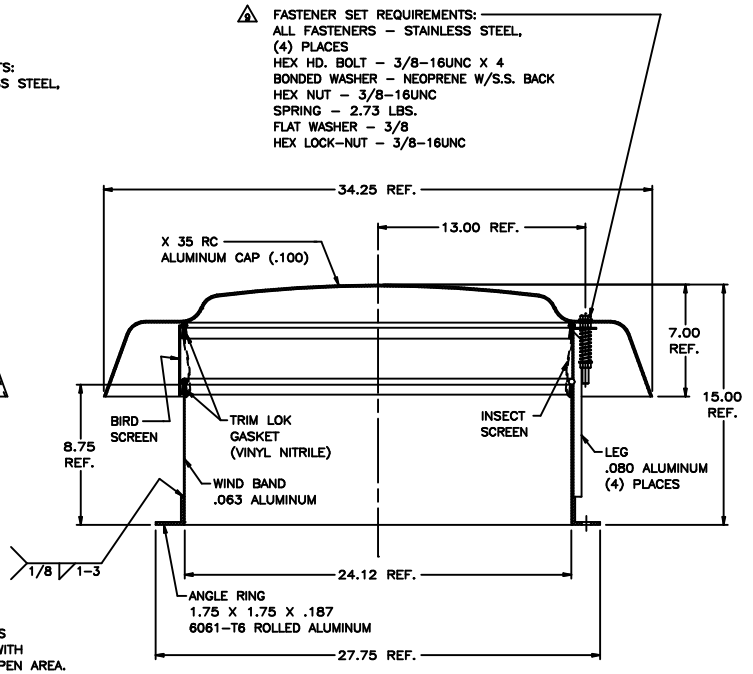

SECTION A-A

B B

NOTE: .25" W.C. EXHAUST & .25" W.C. VACUUM

9 SPECIFICATION NOTE:
THIS VENT MEETS THE REQUIREMENTS OF SECTION 5.7.2 OF AWWA D103-97.

REV	CHANGE DESCRIPTION	ECN DATE MADE/CHKD	APPVD BY DATE
8	ADDED "CFM" TO CHART.	98161 6/1/98 DMA/TAK	TAK 6/98
9	REVISED FASTENER SET REQUIREMENTS; ADDED SPECIFICATION NOTE:	99045 04/01/99 TAK / JJS	JJS 4/99
10	CHANGED INLET SQ. FT. TO 3.14 FROM 3.41 AND CHANGED CFM TO 1570 FROM 1511.	00007 01/14/00 JTF/TAK	TAK 1-00

TOLERANCES ON DIMENSIONS ARE AS FOLLOWS EXCEPT FOR BASIC DIMENSIONS, MAT'L. STOCK SIZES AND TOLERANCES SPECIFIED OTHERWISE.
ONE DECIMAL ±.080
TWO DECIMALS ±.030
THREE DECIMALS ±.015
ANGULAR DIMENSIONS ± 1°
CAST DIMENSIONS
MATERIAL STOCK SIZE TOLERANCES SHALL CONFORM TO APPLICABLE STANDARD MILL VALUES UNLESS COVERED WITHIN A SPECIFIED AOS MATERIAL SPECIFICATION
GEOMETRIC SYMBOLOGY PER ANSI Y14.5

DR	TAK	DATE 12/18/96
CHECKED	RKK	DATE 12-20-96
APPROVED	R.KRAUSE	DATE 12-20-96
SCALE	.25" = 1"	MATERIAL NOTED
NAME	GRAVITY VENT	
PRODUCT	AQUASTORE SYSTEMS	
NEXT ASSY	-	SIZE D
SUPERSEDES	255469 R.6	DRAWING NUMBER 255469 REV 10

A.O. SMITH
ENGINEERED STORAGE PRODUCTS COMPANY
GLENDALE, ILLINOIS 60139

CONFIDENTIAL
THIS DRAWING IS THE EXCLUSIVE PROPERTY OF A.O. SMITH CORP. AND IS LOANED SUBJECT TO AGREEMENT AND RECALL. IT IS NOT TO BE COPIED, LOANED OR DISCLOSED WITHOUT THE EXPRESS WRITTEN CONSENT OF THE COMPANY.
AUTOMATIC ELECTRIC & WATER
ALL RIGHTS RESERVED

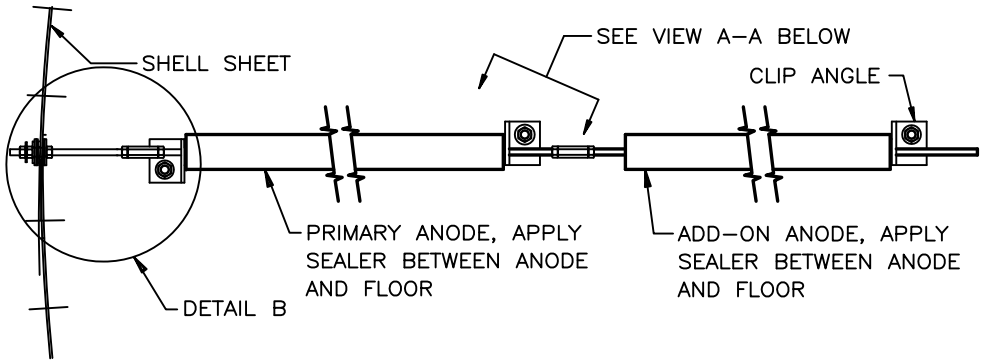

USAGE AQUASTORE CONCRETE FOUNDATION
PLAN VIEW OF ANODE IN ASSEMBLED POSITION

NOTES:
1. THIS CONSTRUCTION DETAIL IS INTENDED TO SHOW THE CATHODIC PROTECTION SYSTEM AS INSTALLED. SEE P/N 266817 FOR DETAILED INSTALLATION INSTRUCTIONS.
2. ALL NSF APPROVED SEALERS AND EPOXY BASED COATINGS USED WHEN INSTALLING THE CATHODIC PROTECTION SYSTEM ARE TO BE SUPPLIED BY THE BUILDER.

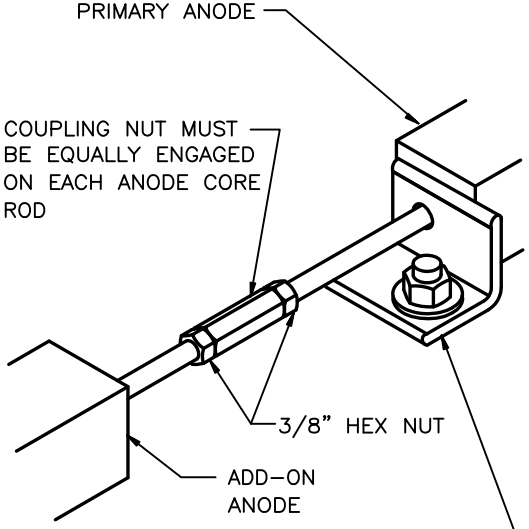

VIEW A–A

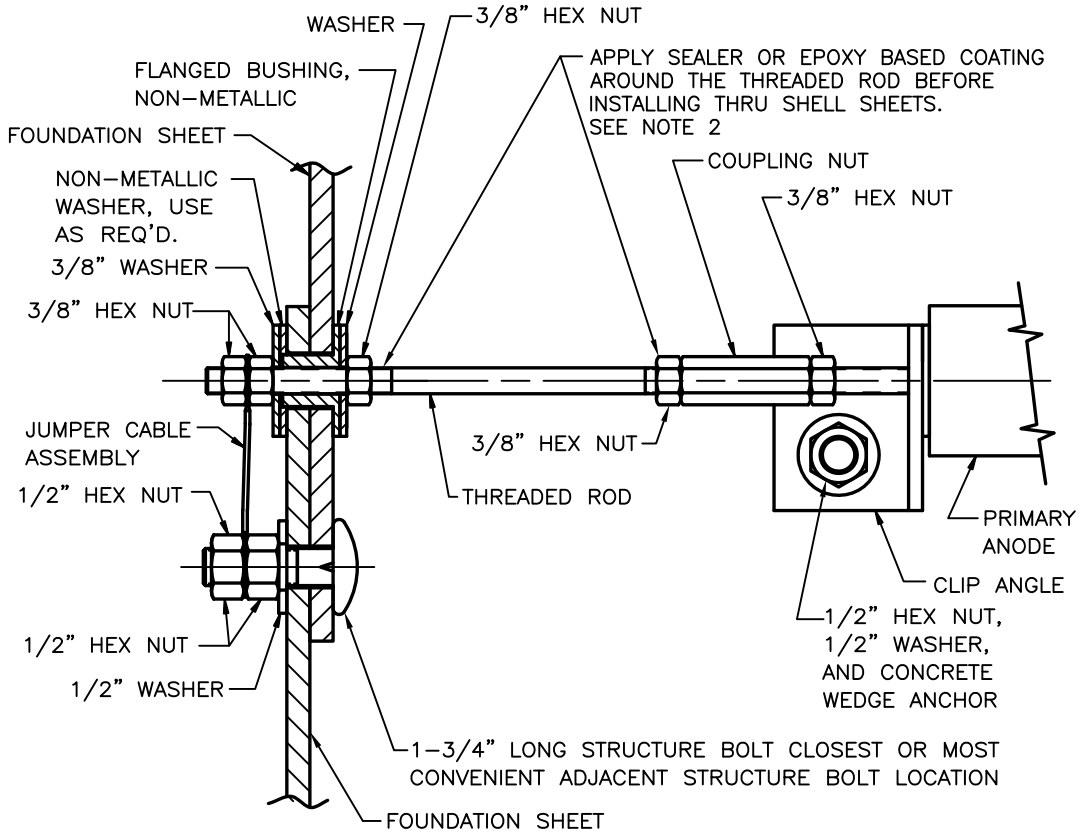

DETAIL B

REL	DESCRIPTION	ECN DR. BY
6	UPDATED TITLE BLOCK	10249 DCS/MEK

CST STORAGE

DEKALB, ILLINOIS 60115

CONFIDENTIAL
THIS DRAWING IS THE PROPRIETARY PROPERTY OF CST STORAGE AND SHALL NOT BE USED NOR REPRODUCED WITHOUT THE EXPRESS WRITTEN CONSENT OF THE COMPANY.
CST STORAGE COPYRIGHT © 2011
ALL RIGHTS RESERVED

DRAWN BY	DMA
DATE	10/10/97

CONSTRUCTION DETAIL CATHODIC PROTECTION SYSTEM AS INSTALLED CONCRETE FOUNDATIONS ANODE ATTACHMENT

DRWG NO.	265449

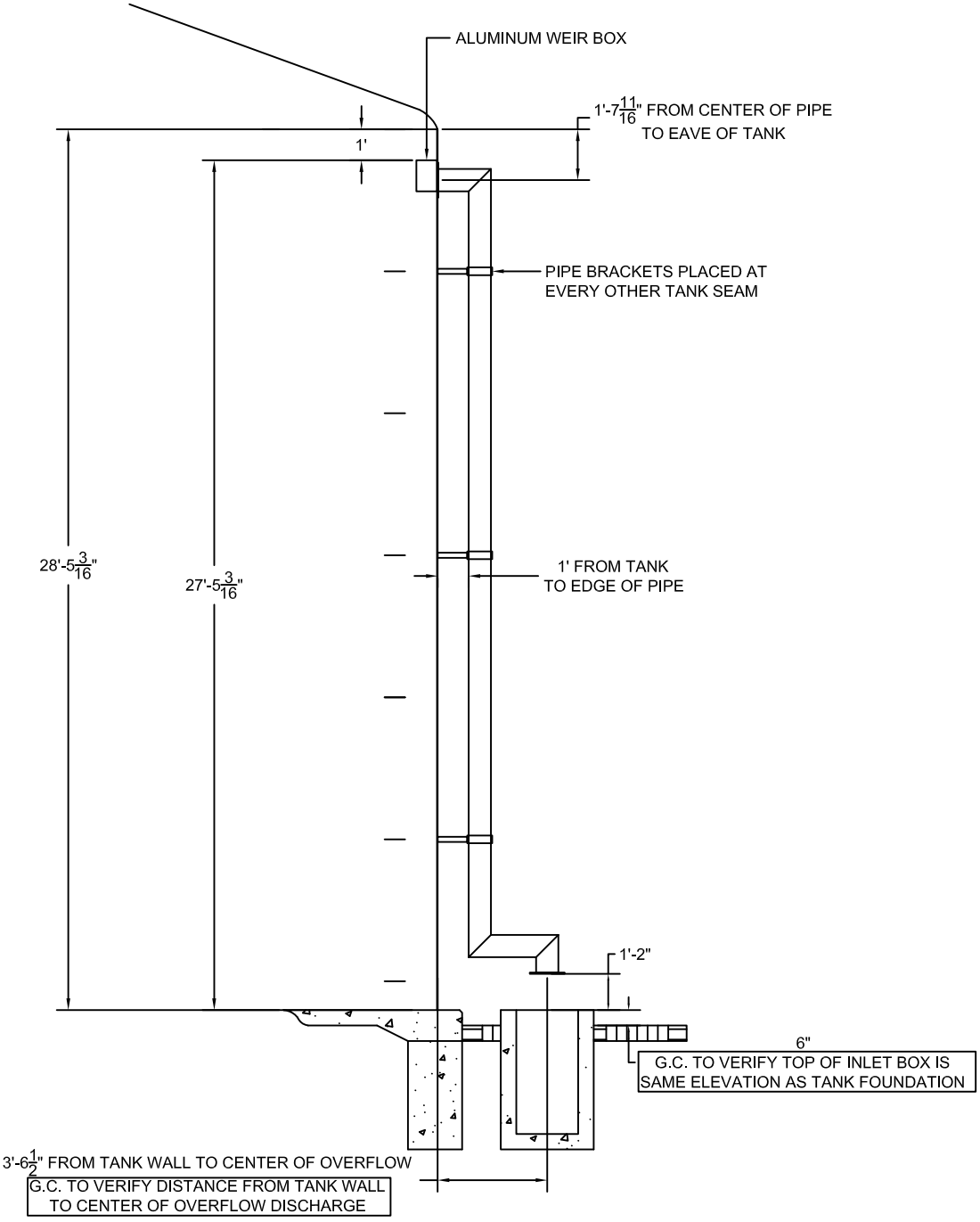

NOTES:

1. PIPE MATERIAL TO BE 8" SCH10 CARBON STEEL.
2. FLANGES TO BE $\frac{1}{4}$" PLATE, $\frac{9}{16}$" HOLES, 150# BOLT PATTERN, TWO-HOLED BOLT ARRANGEMENT
3. EXTERIOR OF PIPE TO BE PAINTED COBALT BLUE
3. PIPE EXTERIOR TO BE BLASTED PER MANUFACTURER'S RECOMMENDATION, 3-5 MILS PRIMER, AND 4-6 MILS SHERWIN WILLIAMS HI-SOLIDS POLYURETHANE OR EQUAL.

DRAWING TITLE	DATE	DWN BY	CHK'D BY	
SAND COULEE, MT WATER STORAGE TANK	7/28/14	JH	JM	
	JOB NO. 406256		DWG. NO. 406256-OF	REF. SHEET ST-4
OVERFLOW	ENGINEERING AMERICA INC.			

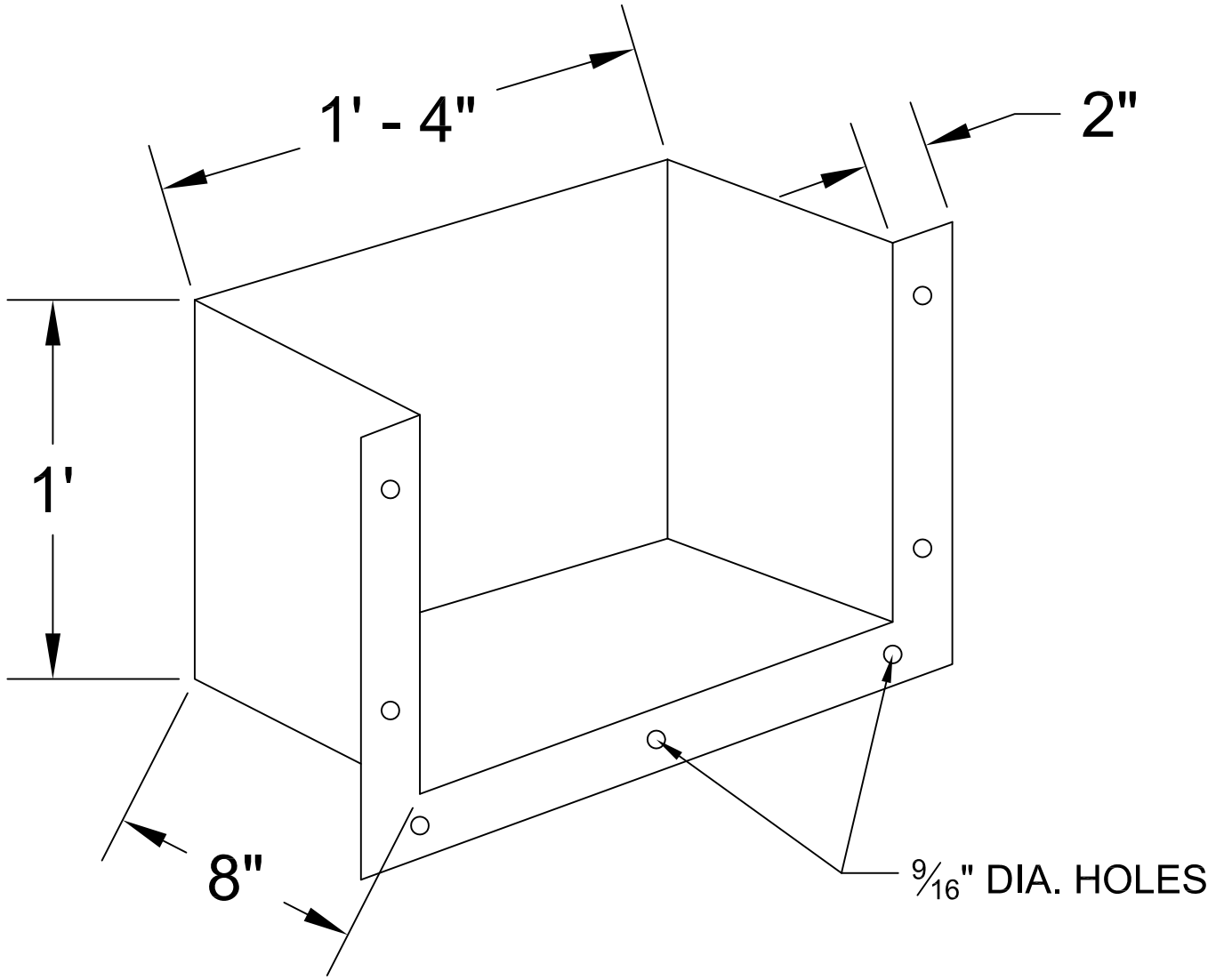

DRAWING TITLE

SAND COULEE, MT
WATER STORAGE TANK

OVERFLOW WEIR BOX

DATE	DWN	CHK'D	
7/28/14	JH	.	

JOB NO.	DWG. NO.	REV.
406256	406256-WB	000

ENGINEERING AMERICA INC.

ANSI COMPLIANT SAFLOK® CARABINERS

Reduce Risk Today - Keep Your Workers Safe with New ANSI Z359 Compliant Saflok® Carabiners!

- Saflok® carabiners are an extremely versatile choice to keep your system securely connected
- User-friendly design for simple operation even while wearing gloves
- Self-closing/Self-locking gate for increased safety and security
- Zinc plated construction for added durability
- High strength steel construction with a minimum tensile strength of 5,000 pounds
- Gate Face withstands a load of 3,600 lbs. (up from 220 lbs.)
- Side of Gate withstands a load of 3,600 lbs. (up from 350 lbs.)
- Compatible with most connecting rings
- Meets OSHA and the new stringent ANSI Z359.1 standard

ANSI COMPLIANT SAFLOK™ CARABINERS

Changes Increase Safety Injuries in the workplace hap pen daily and in most cases are preventable. The original ANSI Z359 standard, introduced in 1992 and revised in 1999, was intended to be a first in a series of standards to address fall protection and to help keep workers safe. Nearly eight years later the standard has been revised. These updates offer significant improvements and will hel lead to a safer work environment.

New Design, Stronger Gate One of the major additions to the Z359.1 standard is new gate strength requirements Under the new standard, snap hooks and carabiners must meet the following;

- Gate face must withstand a load of 3,600 lbs. (up from 220 lbs.)
- Side of gate must withstand a load of 3,600 lbs. (up from 350 lbs.)
- Minor axis of snap hook or carabiner, except those with captive eyes, must withstand 3,600 lbs.
- Tensile load of snap hook or carabiner must withstand 5,000 lbs.

DBI-SALA Saflok® carabiners combine super strength and ease of use. All hardware is constructed from high strength steel and proof tested to exceed the stringent ANSI Z359.1. Our Saflok® carabiners meet the new 3,600 lb. gate strength requirements and have a minimum breaking strength of 5,000 lbs. making them an ideal anchorage connector for your personal fall arrest system.

Saflok® Carabiners are Industry Preferred The user-friendly design of the Saflok® carabiner provides simple one-handed operation even while wearing gloves. They are extremely lightweight and quickly connect your fall arrest system to your anchorage device. The zinc plated steel construction will stand-up even in the most corrosive environments for added longevity. For ultimate safety and security, our Saflok® carabiners also feature a unique self closing and self locking function.

< 2000114 Saflok® Carabiner 2-3/16" Gate Opening

2000113 Saflok® > Carabiner 1-3/16" Gate Opening

2000112 Saflok® > Carabiner 11/16" Gate Opening

Saflok® Carabiner Models:

2000112:	Saflok® steel carabiner, 3,600 lb. self closing and self locking gate (11/16" gate opening)
~~***2000113:***~~	~~Saflok® steel carabiner, 3,600 lb. self closing and self locking gate (1-3/16" gate opening)~~
~~***2000114:***~~	~~Saflok® steel carabiner, 3,600 lb. self closing and self locking gate (2-3/16" gate opening)~~

Specifications:

Construction: Heat treated, zinc plated steel ***Locking Type:*** Double-action self closing/self locking ***Gate Face/Side & Minor Axis:*** 3,600 lbs. minimum ***Proof Load:*** 3,600 lbs. ***Tensile Strength:*** 5,000 lb. minimum ***Weight:*** 0.6 lb. (2000112), 0.9 lb. (2000113), 1.0 lb. (2000114)

Capital Safety
USA: 800.328.6146 • Canada: 800.387.7484 • Asia: +65 6558 7758 • Australia: 1800 245 002 • New Zealand: 0800 212 505
Europe, Middle East, Africa: +33 (0)4 97 10 00 10 • Northern Europe: +44 (0) 1928 571324
www.capitalsafety.com • info@capitalsafety.com

©2007, Capital Safety
Form: 01-15-07 rev: A

Instructions for the following series products:

Vertical Lifelines
Vertical Lifeline Subsystems

(See back pages for specific model numbers.)

User Instruction Manual
Vertical Lifelines and
Vertical Lifeline Subsystems

This manual is intended to meet the Manufacturer's Instructions as required by ANSI Z359.1 and should be used as part of an employee training program as required by OSHA.

WARNING: *This product is part of a personal fall arrest or restraint system. The user must follow the manufacturer's instructions for each component of the system. These instructions must be provided to the user of this equipment. The user must read and understand these instructions before using this equipment. Manufacturer's instructions must be followed for proper use and maintenance of this equipment. Alterations or misuse of this equipment, or failure to follow instructions, may result in serious injury or death.*

IMPORTANT: *If you have questions on the use, care, or suitability of this equipment for your application, contact DBI/SALA.*

IMPORTANT: *Record the product identification information from the ID label in the inspection and maintenance log in section 9.0 of this manual.*

Figure 1 - Vertical Lifeline Assemblies

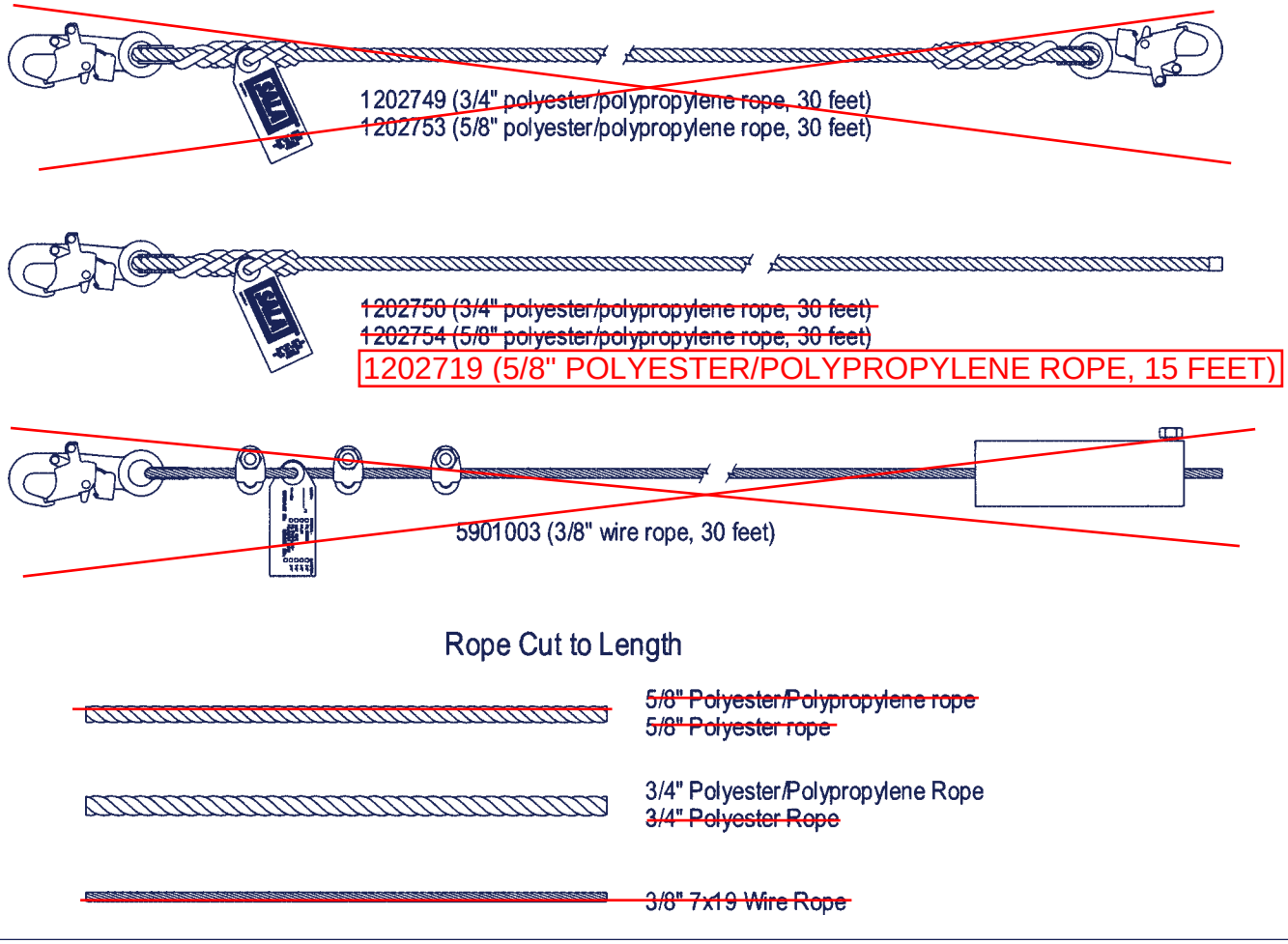

© Copyright 2005, DB Industries, Inc.

DESCRIPTIONS

DBI/SALA Vertical Lifelines and Lifeline Subsystems are available in various styles and configurations. Following are descriptions of typical lifelines and lifeline subsystems. Your model may not be described exactly as configured:

VERTICAL LIFELINE ASSEMBLIES:

1202749: 3/4-inch polyester/polypropylene rope, snap hook at each end, 30 feet long
1202750: 3/4-inch polyester/polypropylene rope, snap hook at one end, 30 feet long
1202753: 5/8-inch polyester/polypropylene rope, snap hook at each end, 30 feet long
1202754: 5/8-inch polyester/polypropylene rope, snap hook at one end, 30 feet long
5901003: 3/8-inch 7x19 galvanized wire rope, snap hook at one end, counterweight, 30 feet long

ROPE MATERIALS:

5/8-inch diameter, polyester/polypropylene rope
5/8-inch diameter, polyester rope
3/4-inch diameter, polyester/polypropylene rope
3/4-inch diameter polyester rope
5/16-inch diameter, 7x19 galvanized wire rope
3/8-inch diameter, 7x19 galvanized wire rope
12-mm diameter, nylon rope
12-mm diameter, polyester rope

1.0 APPLICATIONS

1.1 PURPOSE: Vertical lifelines and vertical lifeline subsystems are intended to be used as part of a personal fall arrest or restraint system. These lifelines and lifeline subsystems (with the exception of 3/8-inch wire rope) are not designed for use in horizontal lifeline systems. Applications include: Inspection work, construction, demolition, maintenance, oil production, confined space rescue, window washing. See Figure 2.

A. FALL ARREST: The lifeline or lifeline subsystem is used as part of a complete fall arrest system, which typically includes a lifeline, rope grab, lanyard, and full body harness. Maximum permissible free fall is six feet.

B. RESTRAINT: The lifeline or lifeline subsystem is used as part of a restraint system. Restraint systems typically include a full body harness and a lanyard to prevent the user from reaching a fall hazard (leading edge roof work). No vertical free fall permitted.

Figure 2 - Applications

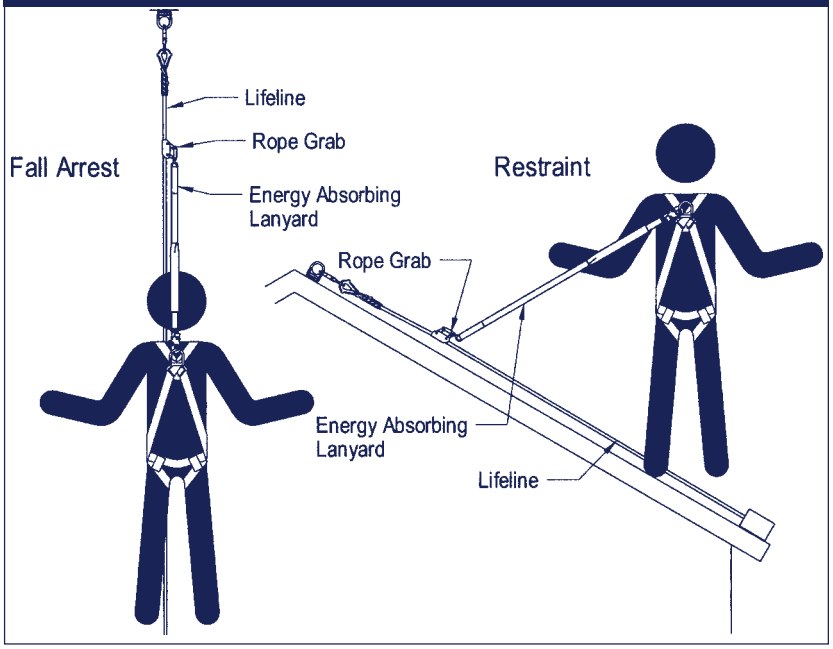

1.2 LIMITATIONS: Consider the following application limitations before using this equipment:

A. CAPACITY: This equipment is designed for use by persons with a combined weight (person, clothing, tools, etc.) of no more than 310 lbs. No more than one person may be connected to a single lifeline.

B. FREE FALL: Personal fall arrest systems used with these lifelines must be rigged to limit the free fall to six feet (according to ANSI Z359.1). Restraint systems must be rigged such that there is no possible vertical free fall. See subsystem manufacturer's instructions for more information.

C. FALL CLEARANCE: Ensure that adequate clearance exists in your fall path to prevent striking an object. The amount of clearance required is dependent on the type of connecting subsystem (rope grab, lanyard), the

anchorage location, and the amount of stretch in the lifeline. See subsystem manufacturer's instructions for more information.

D. ENVIRONMENTAL HAZARDS: Use of this equipment in areas where environmental hazards exist may require additional precautions to reduce the possibility of injury to the user or damage to the equipment. Hazards may include, but are not limited to; high heat, caustic chemicals, corrosive environments, high voltage power lines, explosive or toxic gases, moving machinery, or sharp edges.

E. COMPONENT COMPATIBILITY: The lifelines must be used with DBI/SALA rope grabs only.

F. TRAINING: This equipment is intended to be used by persons trained in its correct application and use.

1.3 APPLICABLE STANDARDS: Refer to national standards, including ANSI Z359.1, and local, state, and federal (OSHA 1910.66, appendix C, 1926.500) requirements for more information on personal fall arrest systems and associated components.

2.0 SYSTEM REQUIREMENTS

2.1 COMPATIBILITY OF COMPONENTS: DBI/SALA equipment is designed for use with DBI/SALA approved components and subsystems only. Substitutions or replacements made with non-approved components or subsystems may jeopardize compatibility of equipment and may effect the safety and reliability of the complete system. See Table 1 for a list of lifeline materials and the model number of compatible equipment available from DBI/SALA.

***IMPORTANT:** The type of lifeline used is dependent upon the application and compatibility requirements of other system components. DBI/SALA rope grabs must be used with DBI/SALA lifelines.*

Table 1 - Component Compatibility

Lifeline Material	Rope Grab Model Number						
	5001441	5000335	5001442	5001011	5006006	5000338	1224005
5/8" Polyester/Polypropylene	X	X					X
3/4" Polyester/Polypropylene			X				
5/8" Polyester	X	X					X
3/4" Polyester			X				
12 mm Nylon					X		
12 mm Polyester					X		
3/8" Wire Rope						X	
5/16" Wire Rope				X			

2.2 COMPATIBILITY OF CONNECTORS: Connectors are considered to be compatible with connecting elements when they have been designed to work together in such a way that their sizes and shapes do not cause their gate mechanisms to inadvertently open regardless of how they become oriented. Contact DBI/SALA if you have any questions about compatibility.

Connectors (hooks, carabiners, and D-rings) must be capable of supporting at least 5,000 lbs. (22kN). Connectors must be compatible with the anchorage or other system components. Do not use equipment that is not compatible. Non-compatible connectors may unintentionally disengage. See Figure 3. Connectors must be compatible in size, shape, and strength. Self locking snap hooks and carabiners are required by ANSI Z359.1 and OSHA.

2.3 MAKING CONNECTIONS: Only use self-locking snap hooks and carabiners with this equipment. Only use connectors that are suitable to each application. Ensure all connections are compatible in size, shape and strength. Do not use equipment that is not compatible. Ensure all connectors are fully closed and locked.

DBI/SALA connectors (snap hooks and carabiners) are designed to be used only as specified in each product's user's instructions. See Figure 4 for inappropriate connections. DBI/SALA snap hooks and carabiners should not be connected:

Figure 3 - Unintentional Disengagement (Roll-out)

If the connecting element that a snap hook (shown) or carabiner attaches to is undersized or irregular in shape, a situation could occur where the connecting element applies a force to the gate of the snap hook or carabiner. This force may cause the gate (of either a self-locking or a non-locking snap hook) to open, allowing the snap hook or carabiner to disengage from the connecting point.

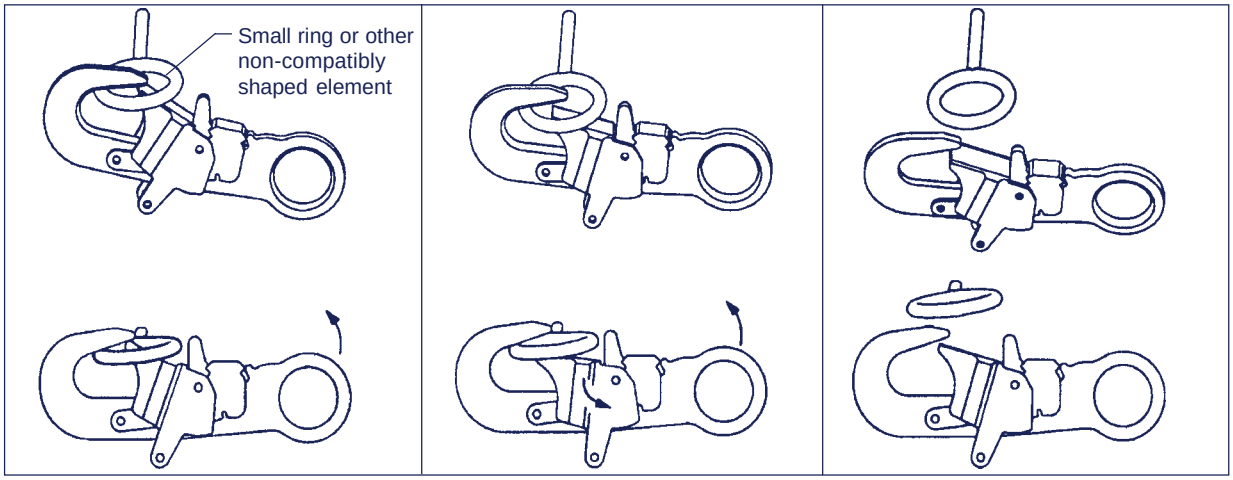

1. Force is applied to the snap hook.
2. The gate presses against the connecting ring.
3. The gate opens allowing the snap hook to slip off.

A. To a D-ring to which another connector is attached.

B. In a manner that would result in a load on the gate.

NOTE: *Large throat opening snap hooks should not be connected to standard size D-rings or similar objects which will result in a load on the gate if the hook or D-ring twists or rotates. Large throat snap hooks are designed for use on fixed structural elements such as rebar or cross members that are not shaped in a way that can capture the gate of the hook.*

C. In a false engagement, where features that protrude from the snap hook or carabiner catch on the anchor and without visual confirmation seems to be fully engaged to the anchor point.

D. To each other.

E. Directly to webbing or rope lanyard or tie-back (unless the manufacturer's instructions for both the lanyard and connector specifically allow such a connection).

F. To any object which is shaped or dimensioned such that the snap hook or carabiner will not close and lock, or that roll-out could occur.

Figure 4 - Inappropriate Connections

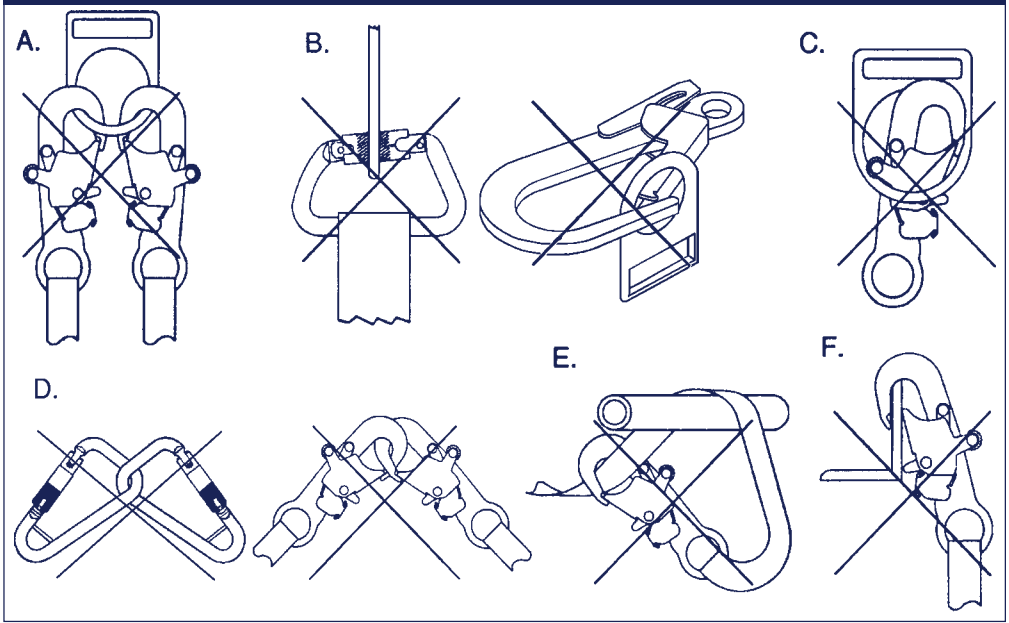

2.4 ANCHORAGE

STRENGTH: The anchorage strength required is dependent upon the application:

A. FALL ARREST: Anchorages used for personal fall arrest systems must be capable of sustaining static loads in the directions permitted by the personal fall arrest system of at least: 3,600 lbs. with certification of a qualified person; or 5,000 lbs. without certification. See ANSI Z359.1 for certification definition. When more

than one personal fall arrest system is attached to an anchorage, the strengths stated above must be met at each anchorage location independently.
From OSHA 1926.500 and 1910.66: Anchorages used for attachment of personal fall arrest systems shall be independent of any anchorage being used to support or suspend platforms, and capable of supporting at least 5,000 lbs. per user attached, or be designed, installed, and used as part of a complete PFAS which maintains a safety factor of at least two, and is under the supervision of a qualified person.

B. RESTRAINT: The restraint system must be attached to an anchorage capable of sustaining static loads in the directions permitted by the restraint system of at least 3,000 lbs. When more than restraint system is attached to an anchorage, the strengths stated above must be met at each anchorage location independently.

3.0 OPERATION AND USE

WARNING: *Do not alter or intentionally misuse this equipment. Consult DBI/SALA when using this equipment in combination with components or subsystems other than those described in this manual. Some subsystem and component combinations may interfere with the operation of this equipment. Use caution when using this equipment around moving machinery, electrical hazards, chemical hazards, and sharp edges.*

WARNING: *Consult your doctor if there is reason to doubt your fitness to safely absorb the shock from a fall arrest. Age and fitness seriously affect a worker's ability to withstand falls. Pregnant women or minors must not use DBI/SALA Vertical Lifelines or subsystems.*

3.1 BEFORE EACH USE of this equipment, carefully inspect it according to steps listed in section 5.0 of this manual.

3.2 PLAN your fall arrest or restraint system before using this equipment. Consider all factors that will affect your safety during use of this equipment. Consider the following points when planning your system:

A. ANCHORAGE: Select a rigid anchorage point that is capable of sustaining the loads specified in section 2.3. For fall arrest applications, select anchorage locations that will minimize free fall and swing fall hazards. For restraint applications, locate the anchorages such that no vertical free fall is possible.

B. FREE FALL: To avoid increased free fall distance, do not work above the anchorage level. Rig personal fall arrest systems so that the free fall is limited to six feet (ANSI Z359.1). Rig restraint systems such that no vertical free fall is possible.

C. FALL ARREST FORCES: The personal fall arrest system must limit fall arrest forces to 1,800 lbs. and deceleration distance must not exceed 42 inches. Do not use a body belt for fall arrest applications.

D. SWING FALLS: See Figure 5. Swing falls occur when the anchorage point is not directly above the point where a fall occurs. The force of striking an object in a swing fall may cause serious injury. Minimize swing falls by working as directly below the anchorage point as possible. Do not permit a swing fall if injury could occur.

Figure 5 - Swing Fall Hazard

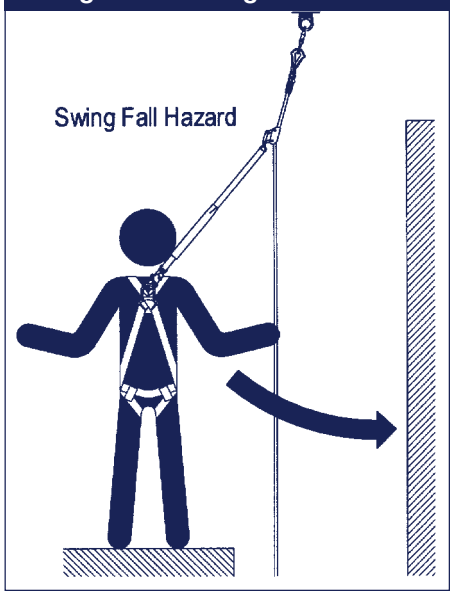

E. FALL CLEARANCE: Ensure sufficient clearance exists in your fall path to prevent striking an object during a fall. The clearance required is dependent upon the subsystem (rope grab and lanyard, rope grab and carabiner) and lifeline properties. Table 2 shows the approximate elongation for new DBI/SALA lifelines in dry conditions. The elongation specified is for an applied static load of 1,800 lbs. Wet ropes generally have more elongation than dry ropes. Allow for additional elongation in wet or humid conditions. Lifeline elongation must be considered when estimating fall clearance.

F. SHARP EDGES: Avoid working where your lifeline, lifeline subsystem, or other system components will be in contact with, or abrade against, unprotected sharp edges. Do not loop a lifeline around small diameter structural members. If working with this equipment around sharp edges is unavoidable, provide protection by using a heavy pad over the exposed sharp edge.

Table 2 - Lifeline Elongation								
Lifeline Material	**Lifeline Length**							
	25 feet	**50 feet**	**75 feet**	**100 feet**	**150 feet**	**200 feet**	**250 feet**	**300 feet**
5/8" Polyester/Polypropylene	2.5 feet	5 feet	7.5 feet	10 feet	15 feet	20 feet	25 feet	30 feet
3/4" Polyester/Polypropylene	3 feet	6 feet	9 feet	12 feet	18 feet	24 feet	30 feet	36 feet
5/8" Polyester	2.75 feet	5.5 feet	8.25 feet	11 feet	16.5 feet	22 feet	27.5 feet	33 feet
3/4" Polyester	3.5 feet	7 feet	10.5 feet	14 feet	21 feet	28 feet	35 feet	42 feet
12-mm Nylon	6.75 feet	13.5 feet	20.25 feet	27 feet	40.5 feet	54 feet	67.5 feet	81 feet
12-mm Polyester	6.25 feet	12.5 feet	18.75 feet	25 feet	37.5 feet	50 feet	62.5 feet	75 feet
3/8" Wire Rope	---	---	---	0.43 feet	0.65 feet	0.86 feet	1.07 feet	1.29 feet
5/16" Wire Rope	---	---	---	0.5 feet	0.75 feet	1.0 feet	1.25 feet	1.5 feet

G. RESCUE: The employer must have a rescue plan and the ability to implement it.

H. AFTER A FALL: Components which have been subjected to fall arrest forces must be removed from service and destroyed.

I. GENERAL USE CONSIDERATIONS: Avoid working where your lifeline may cross or tangle with that of another worker. Do not allow your lifeline to pass under your arms or between your feet.

3.3 MAKING CONNECTIONS: See Figure 6. When using a hook to connect components or to an anchorage, ensure roll-out cannot occur. Self locking snap hooks and carabiners should be used to reduce the possibility of roll-out. Do not tie a knot in the lifeline. Do not attach a snap hook directly to a horizontal lifeline. Follow manufacturer's instructions for each component of the system.

Figure 6 - Making Connections

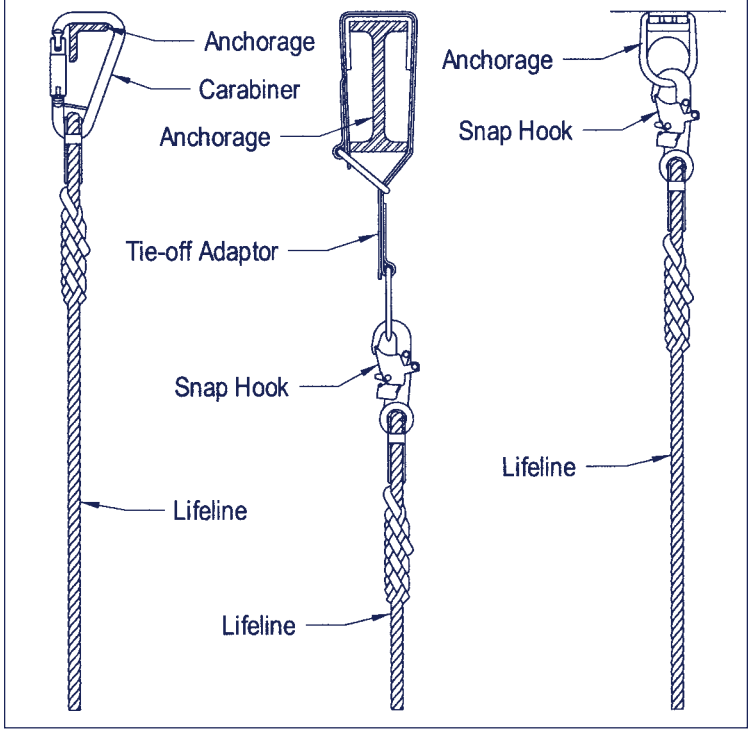

A. CONNECTING TO AN ANCHORAGE OR ANCHORAGE CONNECTOR: Lifelines or lifeline subsystems supplied with connecting hooks should be connected to the anchorage in accordance with section 3.3. Lifelines supplied without hooks must have a hook or anchorage connector spliced directly to the lifeline. See Figure 7. Connectors attached to synthetic rope lifelines must be attached using a spliced eye termination and thimble. The splice must be made with five tucks. Connectors attached to wire rope lifelines must be attached using a formed eye termination with a thimble. Acceptable methods of forming spliced eyes are: Spliced eye with one swaged ferrule; Return eye with a minimum of two swaged ferrules; Return eye with a minimum of three wire rope clips. The connection must support 5,000 lbs. Follow manufacturer's instructions when forming eye with swaged ferrules or wire rope clips.

Figure 7 - Spliced Eye Rope Terminations

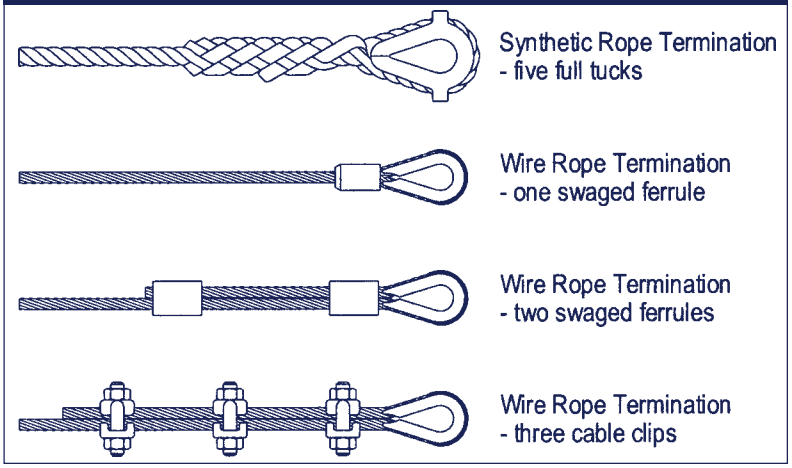

IMPORTANT: *Knots must not be used for load bearing end terminations. See ANSI Z359.1. Some knots reduce lifeline strength fifty percent or more.*

IMPORTANT: *If the user splices or forms end terminations, proper procedures must be followed to ensure compatibility in size, shape, and strength. DBI/SALA is not responsible for subsystems not manufactured by DBI/SALA.*

B. CONNECTING ROPE GRAB TO LIFELINE: Follow the rope grab manufacturer's instructions for connecting the rope grab to the lifeline. DBI/SALA rope grabs must be used with these lifelines.

3.4 AFTER USE of this equipment, clean and store according to section 6.0 of this manual.

4.0 TRAINING

4.1 It is the responsibility of the user to assure they are familiar with these instructions, and are trained in the correct care and use of this equipment. User must also be aware of the operating characteristics, application limits, and the consequences of improper use of this equipment.

WARNING: *Training must be conducted without exposing the trainee to a fall hazard. Training should be repeated on a periodic basis.*

5.0 INSPECTION

5.1 FREQUENCY:

- **Before Each Use** inspect according to steps listed in section 5.2.
- **This Equipment** must be inspected according to steps listed in section 5.2 by a competent person, other than the user, at least annually. Record the results of each inspection in the inspection and maintenance log in section 9.0. NOTE: Cal/OSHA requires personal fall arrest systems be inspected prior to each use for wear, damage, and defects and inspected by a competent person* at least twice a year, in accordance with the manufacturer's recommendations, with inspection dates documented.

**Competent person: An individual knowledgeable of a manufacturer's recommendations, instructions and manufactured components who is capable of identifying existing and predictable hazards in the proper selection, use and maintenance of fall protection.*

WARNING: *If this equipment has been subjected to fall arrest forces remove from service and destroy.*

IMPORTANT: *Extreme working conditions (harsh environments, prolonged use, etc.) may require increasing the frequency of inspections.*

5.2 INSPECTION STEPS:

Step 1. Inspect lifeline hardware (snap hooks, ferrules, thimbles, etc.). These items must not be damaged, broken or distorted. These items must be free of sharp edges, burrs, cracks, worn parts, or corrosion. Hook gates must move freely and lock upon closing.

Step 2. Inspect the lifeline per the following:

SYNTHETIC ROPE: Inspect rope for concentrated wear. Material must be free of frayed strands, broken yarns, cuts, abrasions, burns, and discoloration. The rope must be free of knots, excessive soiling, paint build-up, and rust staining. Rope splices must be tight, with five full tucks, and thimbles must be held firmly by the splice. Check for chemical or heat damage; indicated by brown, discolored, or brittle areas. Check for ultraviolet damage; indicated by discoloration and splinters and slivers along the rope surface. All of the above factors are known to reduce rope strength. Damaged or questionable rope should be replaced.

WIRE ROPE: Inspect entire length of wire rope. Always wear protective gloves when inspecting wire rope. Inspect for broken wires by passing cable through gloved hands, flexing the rope every few inches to expose breaks. Broken wires can be removed by bending the wire back and forth parallel to the rope

length. Do not pull broken wires out of the rope. Replace the wire rope if there are six or more randomly distributed broken wires in one lay; or three or more broken wires in one strand in one lay. A “lay” of wire rope is the length of wire rope it takes for a strand (the larger group of wires) to complete one revolution along the rope. Replace the wire rope if there are broken wires within one inch of the swages at either end of the assembly. Wire rope should be free of corrosion.

Step 3. Inspect labels. All labels must be present and fully legible. See section 8.0.

Step 4. Inspect each system component or subsystem according to manufacturer’s instructions.

Step 5. Record the inspection date and results in the inspection log in section 9.0.

5.3 If inspection reveals an unsafe or defective condition, remove equipment from service and destroy, or contact an authorized service center for repair.

6.0 MAINTENANCE, SERVICING, STORAGE

6.1 Clean the lifeline with water and a mild detergent. Wipe hardware dry with a clean, dry cloth and hang to air dry. Do not force dry with heat. An excessive build-up of dirt, paint, etc. may prevent the lifeline from working properly, and in severe cases, weaken the rope.

6.2 Additional maintenance and servicing procedures must be completed by and authorized service center. Authorization must be in writing. Do not disassemble this equipment.

6.3 Store the lifeline in a cool, dry, clean environment, out of direct sunlight. Avoid areas where chemical vapors may be present. Thoroughly inspect the lifeline after extended storage.

7.0 SPECIFICATIONS

7.1 LIFELINE SPECIFICATIONS:

* The 12-mm diameter lifelines do not meet ANSI Z359.1 requirements.

Table 3 - Lifeline Specifications

Lifeline Material	Tensile Strength
5/8-inch diameter, polyester/polypropylene blend, three-strand rope	7,000 lbs.
3/4-inch diameter, polyester/polypropylene blend, three-strand rope	8,820 lbs.
5/8-inch diameter, polyester, three-strand rope	8,500 lbs.
3/4-inch diameter, polyester, three-strand rope	12,000 lbs.
12-mm diameter nylon rope *	6,614 lbs.
12-mm diameter polyester rope *	5,004 lbs.
3/8-inch diameter, galvanized wire rope	14,400 lbs.
5/16-inch diameter galvanized wire rope	9,800 lbs.
5/8-inch diameter nylon static kernmantle rope	12,000 lbs.

7.2 HARDWARE SPECIFICATIONS:

Snap Hook: Drop forged, alloy steel self locking snap hook, 5,000 lbs. tensile strength.

8.0 LABELING

8.1 The following labels must be present and fully legible:

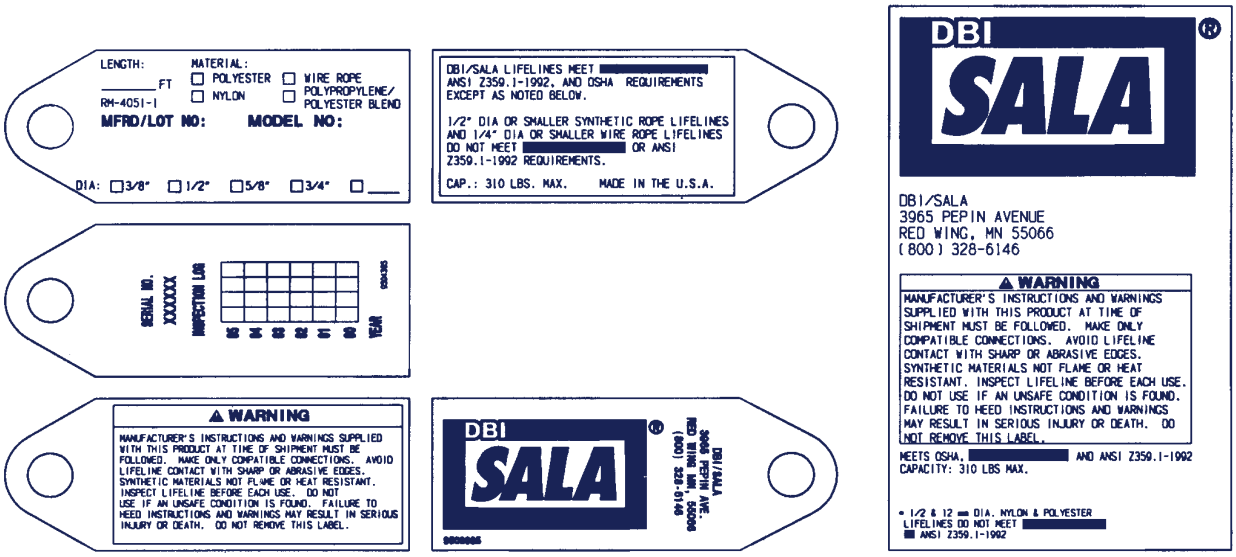

9.0 INSPECTION AND MAINTENANCE LOG

DATE OF MANUFACTURE: _____

MODEL NUMBER: _____

DATE PURCHASED: _____

INSPECTION DATE	INSPECTION ITEMS NOTED	CORRECTIVE ACTION	MAINTENANCE PERFORMED
Approved By:			
Approved By:			
Approved By:			
Approved By:			
Approved By:			
Approved By:			
Approved By:			
Approved By:			
Approved By:			
Approved By:			
Approved By:			
Approved By:			
Approved By:			
Approved By:			

This instruction applies to the following models:

1202701	1202757	1202813	1202868	1202923	1202979	1203119	1210400	3511004	5900161
1202702	1202759	1202814	1202869	1202924	1202980	1203120	1210450	3511005	5900162
1202703	1202760	1202815	1202870	1202925	1202981	1203121	1210500	3511006	5900163
1202704	1202761	1202816	1202871	1202926	1202982	1203122	1210800	3511007	5901000
1202705	1202762	1202817	1202872	1202927	1202983	1203123	1211000	3511008	5901001
1202706	1202763	1202818	1202873	1202928	1202984	1203124	1211030	3511009	5901002
1202707	1202764	1202819	1202874	1202929	1202985	1203125	1211050	3511010	5901003
1202708	1202765	1202820	1202876	1202930	1202986	1203126	1211075	3511011	5901004
1202709	1202766	1202821	1202877	1202931	1202987	1203127	1211100	3511012	5901005
1202710	1202767	1202822	1202878	1202933	1202988	1203128	1211120	3511013	5901006
1202711	1202768	1202823	1202879	1202934	1202989	1203129	1211125	3511014	5901007
1202712	1202769	1202824	1202880	1202935	1202990	1203130	1211127	3511015	5901008
1202713	1202770	1202825	1202881	1202936	1202991	1203131	1211150	3511016	5901009
1202714	1202771	1202826	1202882	1202937	1202992	1203132	1211170	3511017	5901010
1202715	1202772	1202827	1202883	1202938	1202993	1203133	1211200	3900071	5901011
1202716	1202773	1202828	1202884	1202939	1202994	1203134	1211250	5900110	5901012
1202717	1202774	1202829	1202885	1202940	1202995	1203135	1211300	5900111	5901013
1202718	1202775	1202830	1202886	1202941	1202996	1203136	1211350	5900112	5901014
1202719	1202776	1202831	1202887	1202942	1202997	1203137	1211400	5900113	5901015
1202720	1202777	1202832	1202888	1202943	1202998	1203138	1211500	5900114	5901016
1202721	1202778	1202833	1202889	1202944	1202999	1203139	1211800	5900115	5901018
1202722	1202779	1202834	1202890	1202945	1203011	1203140	1212006	5900116	5901019
1202723	1202780	1202837	1202891	1202946	1203012	1203142	1212015	5900117	5901020
1202724	1202781	1202838	1202892	1202947	1203013	1203143	1212025	5900118	5901021
1202725	1202782	1202839	1202893	1202948	1203020	1204001	1212027	5900119	5901022
1202726	1202784	1202840	1202894	1202950	1203021	1210001	1212030	5900120	5901023
1202727	1202785	1202841	1202895	1202951	1203022	1210002	1212040	5900121	5901024
1202729	1202786	1202842	1202896	1202952	1203023	1210010	1212050	5900122	5901025
1202730	1202787	1202843	1202897	1202953	1203024	1210012	1212070	5900123	5901026
1202731	1202788	1202844	1202898	1202954	1203025	1210020	1212075	5900124	5901027
1202732	1202789	1202845	1202899	1202955	1203040	1210025	1212080	5900125	5901028
1202733	1202790	1202846	1202900	1202956	1203045	1210030	1212100	5900126	5901029
1202734	1202791	1202847	1202901	1202957	1203080	1210035	1212120	5900127	5901030
1202735	1202792	1202848	1202902	1202958	1203085	1210050	1212125	5900128	5901031
1202736	1202793	1202849	1202903	1202959	1203100	1210055	1212150	5900129	5901032
1202737	1202794	1202850	1202904	1202960	1203101	1210060	1212200	5900130	5901033
1202738	1202795	1202851	1202905	1202961	1203102	1210075	1212210	5900131	5901034
1202739	1202796	1202852	1202906	1202962	1203103	1210085	1212300	5900132	5901035
1202740	1202797	1202853	1202907	1202963	1203104	1210090	1212400	5900133	6126023
1202741	1202798	1202854	1202908	1202964	1203105	1210100	1212500	5900134	6126025
1202742	1202799	1202855	1202909	1202965	1203106	1210120	1212610	5900135	6126050
1202743	1202800	1202856	1202910	1202966	1203107	1210125	1212611	5900136	6126100
1202744	1202801	1202857	1202911	1202967	1203108	1210140	1212612	5900137	6126113
1202745	1202802	1202858	1202912	1202968	1203109	1210150	1212613	5900138	6126175
1202746	1202803	1202859	1202913	1202969	1203110	1210160	1212614	5900139	6130004
1202749	1202804	1202860	1202914	1202970	1203111	1210180	1212615	5900150	6130005
1202750	1202806	1202861	1202915	1202971	1203112	1210184	1213300	5900151	6130010
1202751	1202807	1202862	1202917	1202972	1203113	1210200	1370000	5900152	6130011
1202752	1202808	1202863	1202918	1202973	1203114	1210250	3401000	5900153	6130012
1202753	1202809	1202864	1202919	1202974	1203115	1210300	3511000	5900154	6130013
1202754	1202810	1202865	1202920	1202976	1203116	1210310	3511001	5900155	6130014
1202755	1202811	1202866	1202921	1202977	1203117	1210320	3511002	5900156	6130015
1202756	1202812	1202867	1202922	1202978	1203118	1210350	3511003	5900160	6130016

Additional model numbers may appear on the next printing of these instructions

Continued on next page. . .

continued from previous page...

This instruction applies to the following models:

6130018	6130075	6130160	6130900	6140026	6140060	6140121	6140190	6140750
6130020	6130080	6130164	6131000	6140027	6140065	6140122	6140200	6140788
6130022	6130082	6130170	6132000	6140028	6140070	6140123	6140220	6140800
6130024	6130090	6130175	6133200	6140029	6140075	6140128	6140226	6140850
6130025	6130093	6130180	6140007	6140030	6140079	6140129	6140228	6140875
6130026	6130095	6130184	6140008	6140032	6140080	6140130	6140230	6140900
6130029	6130100	6130185	6140009	6140033	6140085	6140131	6140250	6140930
6130030	6130105	6130200	6140010	6140034	6140086	6140134	6140300	6141000
6130031	6130109	6130220	6140011	6140035	6140088	6140136	6140310	6141209
6130032	6130110	6130225	6140012	6140036	6140090	6140138	6140328	6141221
6130033	6130114	6130240	6140013	6140038	6140094	6140139	6140364	6141420
6130036	6130115	6130245	6140014	6140039	6140095	6140140	6140375	6141450
6130038	6130120	6130250	6140015	6140040	6140097	6140143	6140400	6141480
6130040	6130125	6130275	6140016	6140041	6140099	6140144	6140440	6141650
6130041	6130130	6130300	6140017	6140042	6140100	6140146	6140500	6141700
6130044	6130131	6130350	6140018	6140044	6140104	6140150	6140506	6141730
6130050	6130140	6130400	6140019	6140046	6140105	6140151	6140510	6141742
6130054	6130142	6130427	6140020	6140049	6140111	6140160	6140535	6141800
6130060	6130144	6130450	6140021	6140050	6140113	6140166	6140550	6142000
6130064	6130145	6130500	6140022	6140051	6140114	6140174	6140560	6142030
6130066	6130147	6130600	6140023	6140052	6140115	6140175	6140600	6142300
6130070	6130150	6130760	6140024	6140055	6140117	6140180	6140674	6142720
6130074	6130154	6130850	6140025	6140059	6140120	6140184	6140700	6142800

Additional model numbers may appear on the next printing of these instructions

USA
3965 Pepin Avenue
Red Wing, MN 55066-1837
Toll Free: 800-328-6146
Phone: (651) 388-8282
Fax: (651) 388-5065
www.salagroup.com

Canada
260 Export Boulevard
Mississauga, Ontario L5S 1Y9
Toll Free: 800-387-7484
Phone: (905) 795-9333
Fax: (905) 795-8777
www.salagroup.com

This manual is available for download at www.salagroup.com.

Certificate No. FM 39709

Form: 5902127
Rev: H

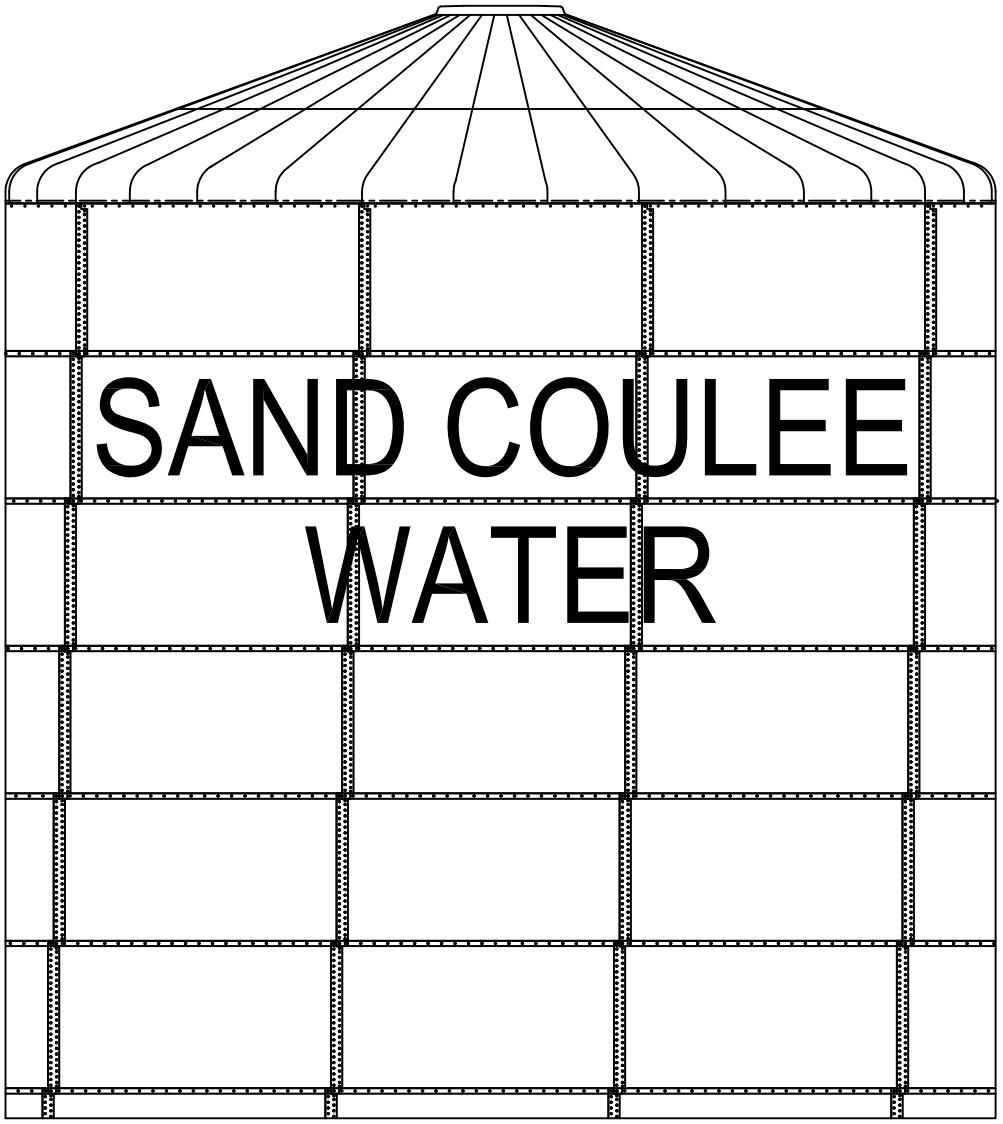

NOTES:

1. DECAL LETTERING TO BE WHITE IN COLOR AND BEGIN ON SECOND SHEET FROM TOP.

DRAWING TITLE	DATE	DWN BY	CHK'D BY	
SAND COULEE, MT WATER STORAGE TANK	8/5/14	JH	JM	
	JOB NO. 406256		DWG. NO. 406256-DECAL	REF. SHEET ST-4
DECAL	ENGINEERING AMERICA INC.			

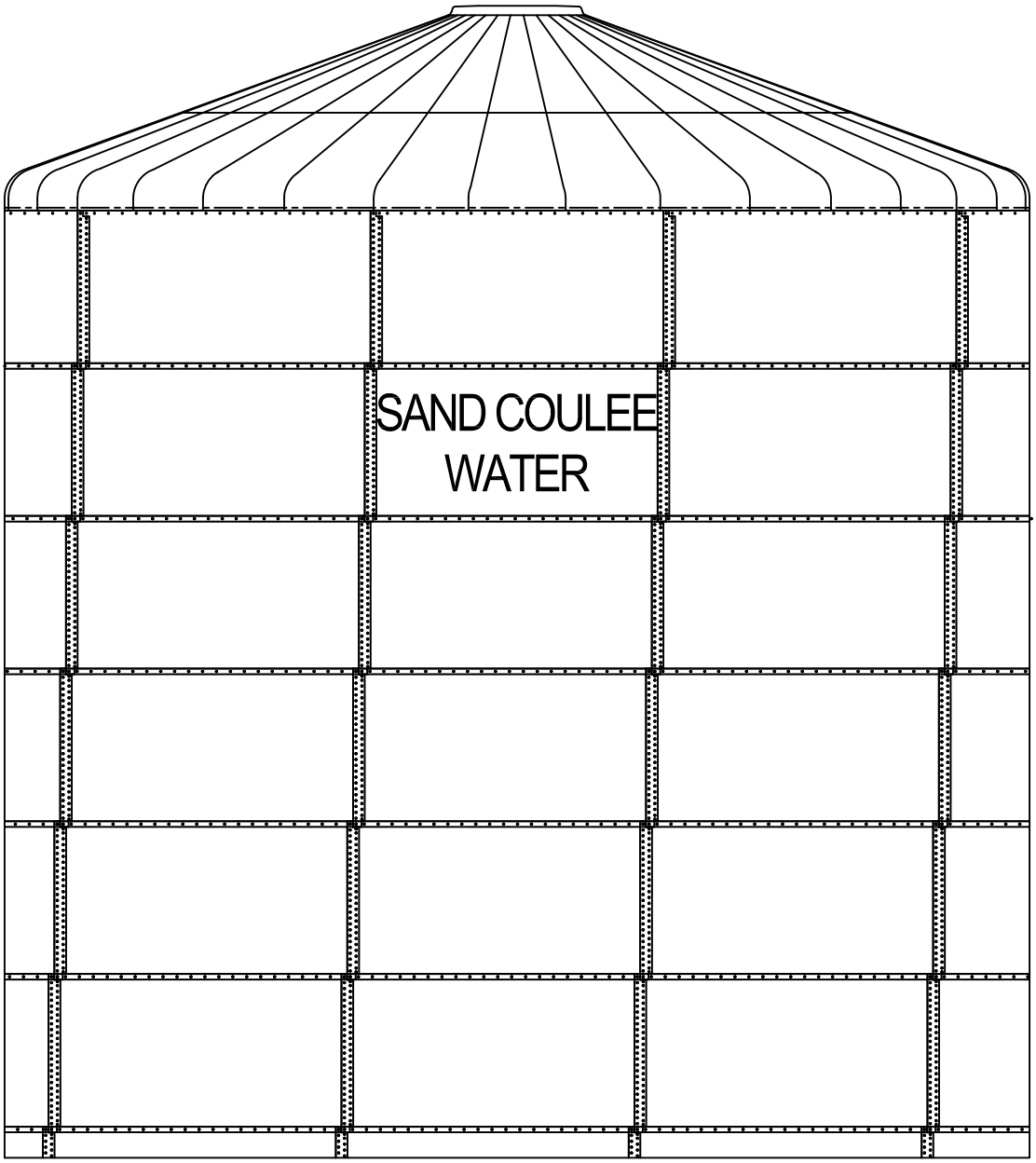

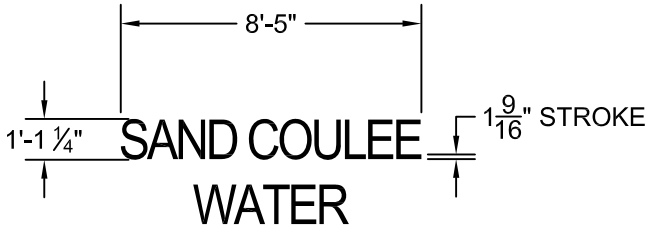

NOTES:

1. DECAL LETTERING TO BE WHITE IN COLOR AND BEGIN ON SECOND SHEET FROM TOP.

DRAWING TITLE	DATE	DWN BY	CHK'D BY	
SAND COULEE, MT WATER STORAGE TANK	8/5/14	JH	JM	
	JOB NO. 406256		DWG. NO. 406256-DECAL	REF. SHEET ST-4
DECAL	ENGINEERING AMERICA INC.			

8/8/2014

San Coulee Water System

PE-14-441-JMM

Submittal

Submersible Mixer

Item #	Qty	Description	Drawings
1	1	SolarBee GS-9-120V Submersible Mixing System and Control Box w/ Scada Monitoring.	Included

PIPESTONE EQUIPMENT
676 MOSS STREET, UNIT A
GOLDEN, CO 80401
PHONE: 303-579-9658
FAX: 303-567-2861
WWW.PIPESTONEEQ.COM

SolarBee® GridBee™

Main Office and Service Center
Medora Corporation
3225 Hwy 22, Dickinson, ND 58601
(866) 437-8076 • (701) 225-4495 • Fax (701) 225-0002

August 8, 2014

Pipestone Equipment
Attn. Jacob McGough
PO Box 11798
Bozeman, MT 59718

Re: GridBee GS-9 Submersible Electric Mixer For Potable Water Tanks

Dear Jacob,

The GS-9 submersible electric mixer is a high-performance mixer from Medora Corporation. Sized for tanks from 500KG to 1MG, it is suitable up to 3MG in moderate conditions. The GS-9 thoroughly mixes the entire tank, providing consistent residual and temperature throughout, and prevents ice damage in the winter in northern climates.

Thank You,

Katie Juntunen

Katie Juntunen
Order Processing
Medora Corporation
Katie.j@medoraco.com

GridBee® SolarBee®
Medora Corporation

Main Office and Service Center
Medora Corporation
3225 Hwy 22, Dickinson, ND 58601
(866) 437-8076 • (701) 225-4495 • Fax (701) 225-0002

Submittal Documents

Submersible Mixer: Section 11730

Sand Coulee Water System Replacement Project

City of Sand Coulee, Montana

Submitted to:

Pipestone Equipment

Jacob McGough

PO Box 11798

Bozeman, MT 59718

August 4, 2014

GridBee® SolarBee®
Medora Corporation

Main Office and Service Center
Medora Corporation
3225 Hwy 22, Dickinson, ND 58601
(866) 437-8076 • (701) 225-4495 • Fax (701) 225-0002

SUBMITTAL DOCUMENTS

Proof of Qualification

Product Overview

Overall Dimension Drawing

Features

SCADA Package

NSF Certification

Warranty Statement

GS-9 Installation & Owner's Manual

Main Office and Service Center
Medora Corporation
3225 Hwy 22, Dickinson, ND 58601
+1 866 437-8076 • +1 701 225 4495 • Fax +1 701 225 0002
www.medoraco.com

PROOF OF QUALIFICATION

History:

Medora Corporation is an offshoot of Pump Systems, Inc., an industrial pump company begun in Dickinson, ND in 1978 by two engineers, Joel Bleth and Willard Tormaschy. The SolarBee project started in 2001 and soon outgrew PumpSystems, Inc.. The two companies split in 2007, with the founders staying with SolarBee,Inc. (recently renamed Medora Corporation in 2012 due to the addition of the GridBee line of grid-powered products) to carry on the development of the new reservoir science.

Medora Corp. provides solar-powered, and more recently grid-powered, circulation equipment to improve water quality in reservoirs. It pioneered this field in 2001 and has since developed the equipment and application engineering needed to solve a variety of problems in wastewater ponds, fresh water lakes, storm water reservoirs, water re-use pond, potable water storage tanks, and other reservoirs. Medora Corp. has successfully installed several thousand SolarBee and GridBee machines in the United States, Canada, and 13 other countries. The first solar powered circulator built and installed by Pump Systems, Inc was in 1998 at Dickinson, ND. Since then Medora Corporation, formerly SolarBee, Inc, has emerged from Pump Systems, Inc. To date, in excess of 2500 SolarBee machines have been built and installed.

Manufacturing Capability:

Medora Corporation has approximately 60 employees, a 40 acre facility including a modern 40,000 sq. ft manufacturing plant and 5 US sales offices and International sales partners whom developed sales offices that cover the globe. The engineering and manufacturing teams have designed and manufactured specialty fluid handling systems for shipment and use in nearly all 50 of the United States, Canada and in dozens of foreign countries in all parts of the world.

Quality Assurance:

Each SolarBee and GridBee unit that leaves the production line is thoroughly inspected and tested before leaving the manufacturing facility. Medora Corporation presently works with a number of outside fabricators for production of SolarBee and GridBee components. A variety of suppliers are used to meet production deadlines and maintain a high level of quality control for every SolarBee and GridBee component.

Technical Capability:

Medora Corporation presently has a staff of over 6 personnel that work primarily for the SolarBee R&D department. Data-logging and flow testing equipment are used to monitor the performance of the new technology.

Medora Corporation currently has a minimum of 10 installation and service field crews, each consisting of two field personnel trained specifically in SolarBee and GridBee installation, service, operation, and performance. The field personnel are fully equipped with service and installation tools, water testing (YSI), electrical testing, and underwater camera equipment.

© 2013 Medora Corporation

GridBee GS-9 Submersible Mixer

GridBee GS-9 submersible mixer thoroughly mixes potable water storage tanks of a wide size range - especially the bottom three feet, the most critical part of the tank. Economical to purchase and operate, the electric GS-9 is easily installed by lowering through any 12" or larger tank hatch. There is no need to enter or drain the tank.

Features & benefits of the GS-9 submersible mixer:

- Eliminate ice damage to tanks in cold climates
- Provide uniform water age and disinfectant distribution
- Prevent stagnation, thermal stratification, and short-circuiting
- Reduce nitrification in chloraminated systems
- Use less disinfectant and produce fewer disinfection byproducts
- Thoroughly mixes entire tank, including floor and walls where bacteria builds up
- Low power consumption
- Low-impact feet and endcaps will not damage interior tank coatings
- Optional NEMA 4X control box with SCADA monitoring
- Compatible with disinfectant boost and THM removal systems
- Suspension kit included to keep mixer off tank floor if desired

Specifications:

- Dimensions: 24 inches (62 cm) long, 11.5 inches (30 cm) diameter
- Weight: 60 pounds (28 kg); shipping weight 100 pounds (46 kg)
- 120v standard; 240v option available
- Five year parts and labor warranty

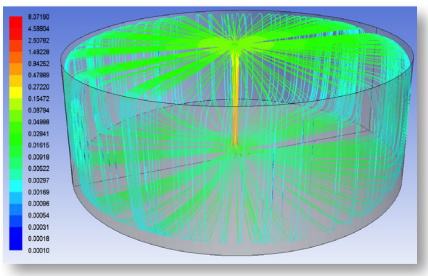

CFD Modeling Available for Your Tank!

*Medora Corporation's potable water products are certified to **NSF/ANSI Standard 61**, including Annex G for low-lead content. Learn more at **www.medoraco.com/std61**.*

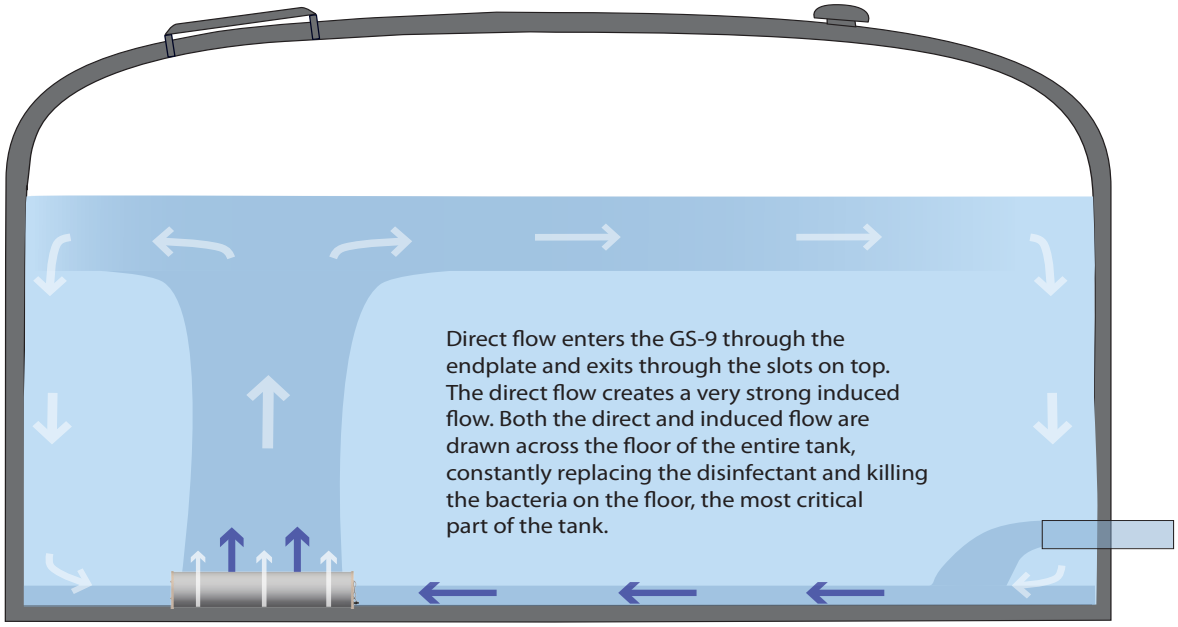

Installation Overview

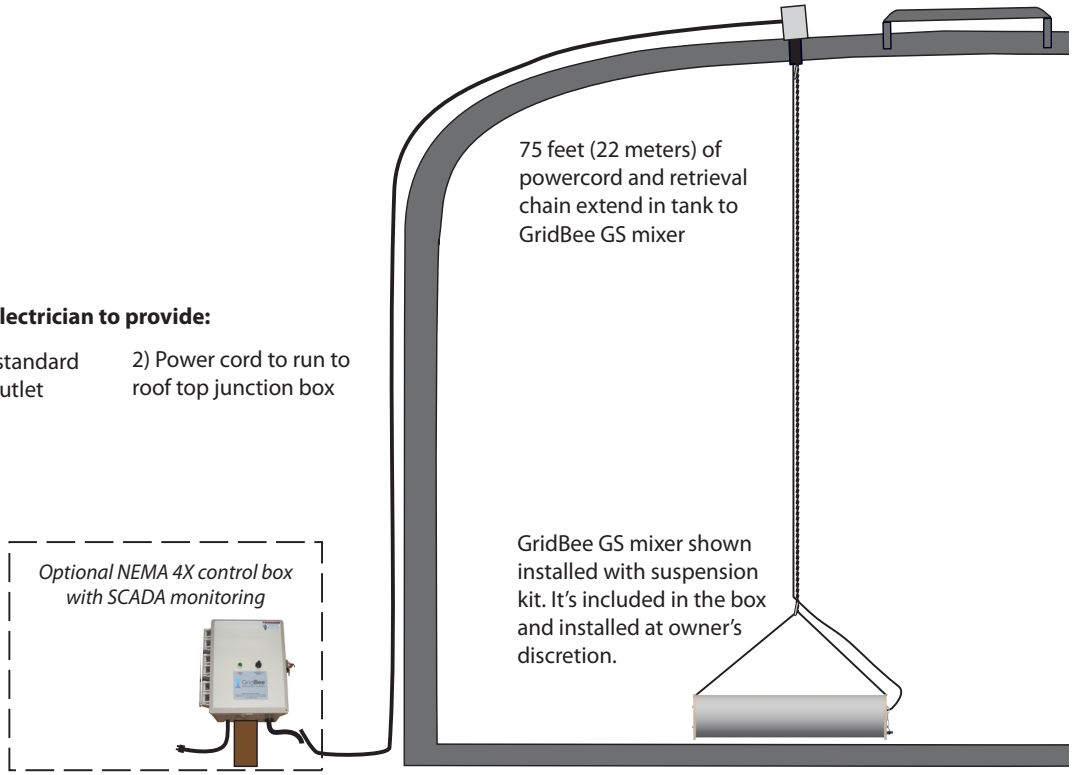

Package Contents

GridBee GS-9 Submersible Mixer

Kellum Grip Cord Strain Relief

Mounting Feet

Junction Box

1-5/16" Hole Saw

Retrieval Chain

Cord Grip

Quick Link

Operations Manual

75 feet (22 meters) of power cord and retrieval chain

Lexel Sealant

Cord Penetrator Bolt

Suspension Kit

Chain Grab Tools

SolarBee® and GridBee® are brands of Medora Corporation

Medora Corporation
3225 Hwy 22 • Dickinson, ND 58601
Ph +1 866 437 8076 • www.medoraco.com
GS9_20140513 • © 2014 Medora Corporation

Locally Represented By:

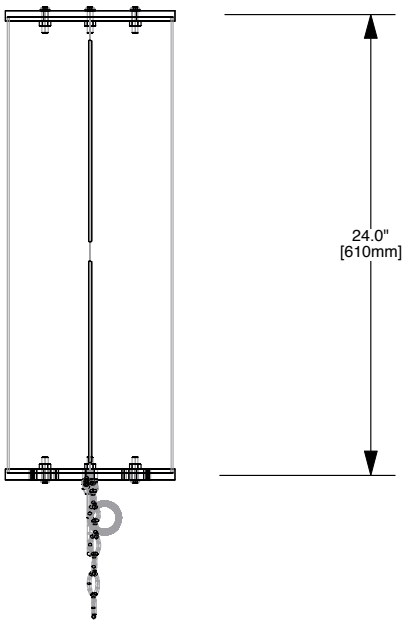

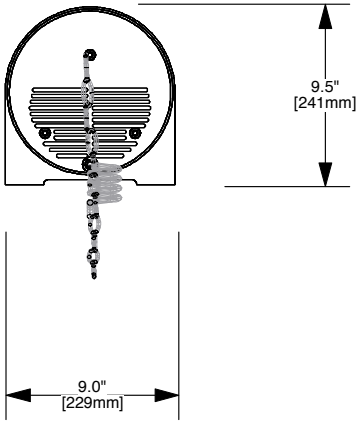

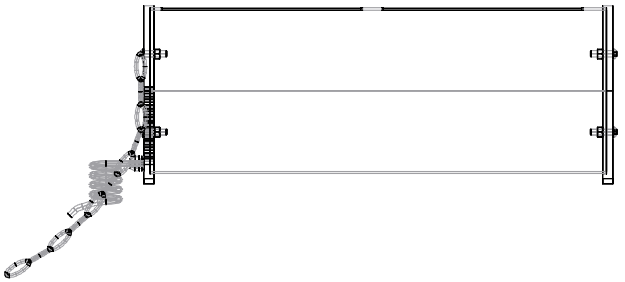

Weight: 65lb (34 kg)		PROPRIETARY AND CONFIDENTIAL THE INFORMATION CONTAINED IN THIS DRAWING IS THE SOLE PROPERTY OF SOLARBEE, INC. ANY REPRODUCTION IN PART OR AS A WHOLE WITHOUT THE WRITTEN PERMISSION OF SOLARBEE, INC. IS PROHIBITED.	GridBee
		TITLE: MODEL GS9	
SCALE: 1:8	DRAWN BY: SolarBee	PART NO: OVERALL DIMENSIONS	REV
DATE: 5/13/2014		FILE NAME: DimensionDwg_GS9_20140513	

GridBee®

GS-9 FEATURES

Technology Description	Submersible, grid powered, circulation equipment for potable water tanks and reservoirs. Designed for continuous operation and can be installed through roof hatch without requiring tank entry.
Minimum Access Opening / Machine Size/Weight	Machine can be installed through 12 inch (30 cm) diameter opening. Assembled machine is 2 feet (0.6 meter) in length X 10 inch (25.4 cm) in diameter and weighs 65 pounds (34 kg).
Materials of Construction	316 stainless steel shell and hardware construction. GS-9 has been constructed using safe materials for contact with potable water. See certifications section below.
Submersible Motor	Submersible motor, designed for continuous operation, low power requirement, direct drive, no gearbox and no lubrication schedule required. See certifications section below.
Power Supply	The standard 120VAC motor requires 120VAC/1PH power source outlet (20 Amp Service), nominal power consumption is 750 Watts. The GS-9 120v unit draws approximately 11.0 Amps @ 120VAC / 60Hz.
Wiring	75 ft (22 m) of submersible power conductor included to terminate within junction box at top of tank. Junction box, also included.
Sealed Tank Fitting	316 stainless steel tank fitting and cord grip included for sealed cord entry through tank roof.
Retrieval Chain	75 ft (22 m) of 316 stainless steel retrieval chain included for machine installation and retrieval without requiring tank entry.
Chlorine Boost Connection	Chlorine boost connection point, 3/8" NPT Male, on machine for adapting to 1/2" (13mm) hose for fast chlorine dispersion during in-reservoir boosting.
Low Elevation Intake	Intake draws water in a horizontal layer within 8 inches (15 cm) of the tank or reservoir floor. Suspension kit included for suspending the GS-9 if required.
Minimum Water Depth	At depths below 2 feet (0.6 meters), the machine should be shut off to prevent damage.
Accessories Available	(1) Portable Chlorine Boost Hose and Boost Pump System, (2) Control and SCADA Panel
Warranty	Limited 5-year parts and labor warranty.
Certifications	Medora Corporation's potable water products are certified to ANSI/NSF Standard 61, including Annex G for low-lead content. Learn more at: www.medoraco.com/std61

Subject to change without notice.

Medora Corporation • 3225 Hwy 22 • Dickinson, ND 58601
+1 866 437 8076 • Ph +1 701 225 4495 • Fax +1 701 225 0002 • www.medoraco.com
© 2014 Medora Corp.

Main Office and Service Center
Medora Corporation
3225 Hwy 22, Dickinson, ND 58601
+1 866 437 8076 • +1 701 225 4495 • Fax: +1 701 225 0002

GridBee GS Mixer SCADA Panel

The GridBee GS Mixer SCADA Accessory Package offers the ability to monitor a GS Mixer for proper operation through a 4-20mA output and remotely control on or off by a local PLC. The unit is contained within a NEMA 4X enclosure to be mounted near the 120 VAC Power Source. Additonal features include a Ground Fault Circuit Interrupter (GFCI) Hand Off Auto (HOA) 3-position switch and operation indication light. Certified UL508.

Monitoring: The 4-20mA signal offers a scaled value of the mixer operating current which during proper operation falls within a specified range. 24 VDC power required, not included.

On/Off Control: A relay is available with a 24 VDC coil to offer remote on or off control while the HOA switch is positioned in Auto for conditions requiring the unit to be shut off such as low water level.

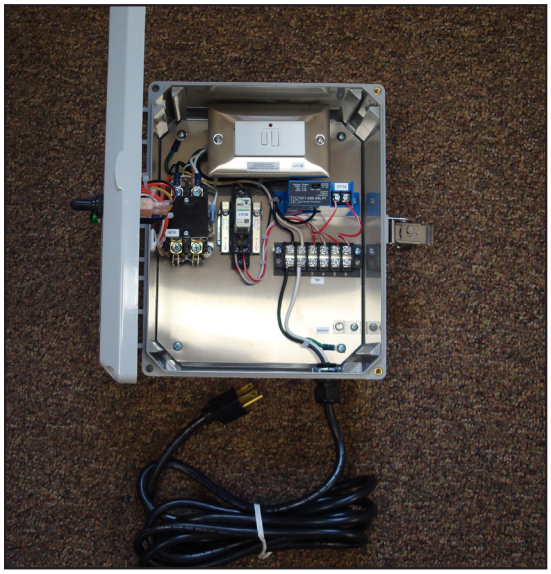

Specifications:

Power Source Required: 120vAC, 20 Amp Outdoor Rated Receptacle

Enclosure: 10 inch X 8 inch X 4 inch, NEMA 4X Molded Carlon
Mounting Feet Hole Pattern: 6.25 inch wide X 11.375 inch high
Back Insert Hole Pattern: 6.25 inch wide X 8.25 inch high

4-20mA Module:
Power Source Required: 5-40 VDC
Linear Scaling: Mixer Current = 1.25 * (mA Value) - 5
4 mA = 0 Amps Mixer Current 20 mA = 20 Amps Mixer Current
Normal Operating Range = 10.0 mA - 13.0 mA (8.5 A - 11.5 A)

On/Off Relay:
Coil Power: 24 VDC Nominal
Type: Normally Open, Can be field adjusted to Normally Closed if required.

See Page 2 For Integration Diagram and Page 3 For Panel Wiring Diagram:

 © 2014 Medora Corp • Dickinson, ND

Integration Diagram:

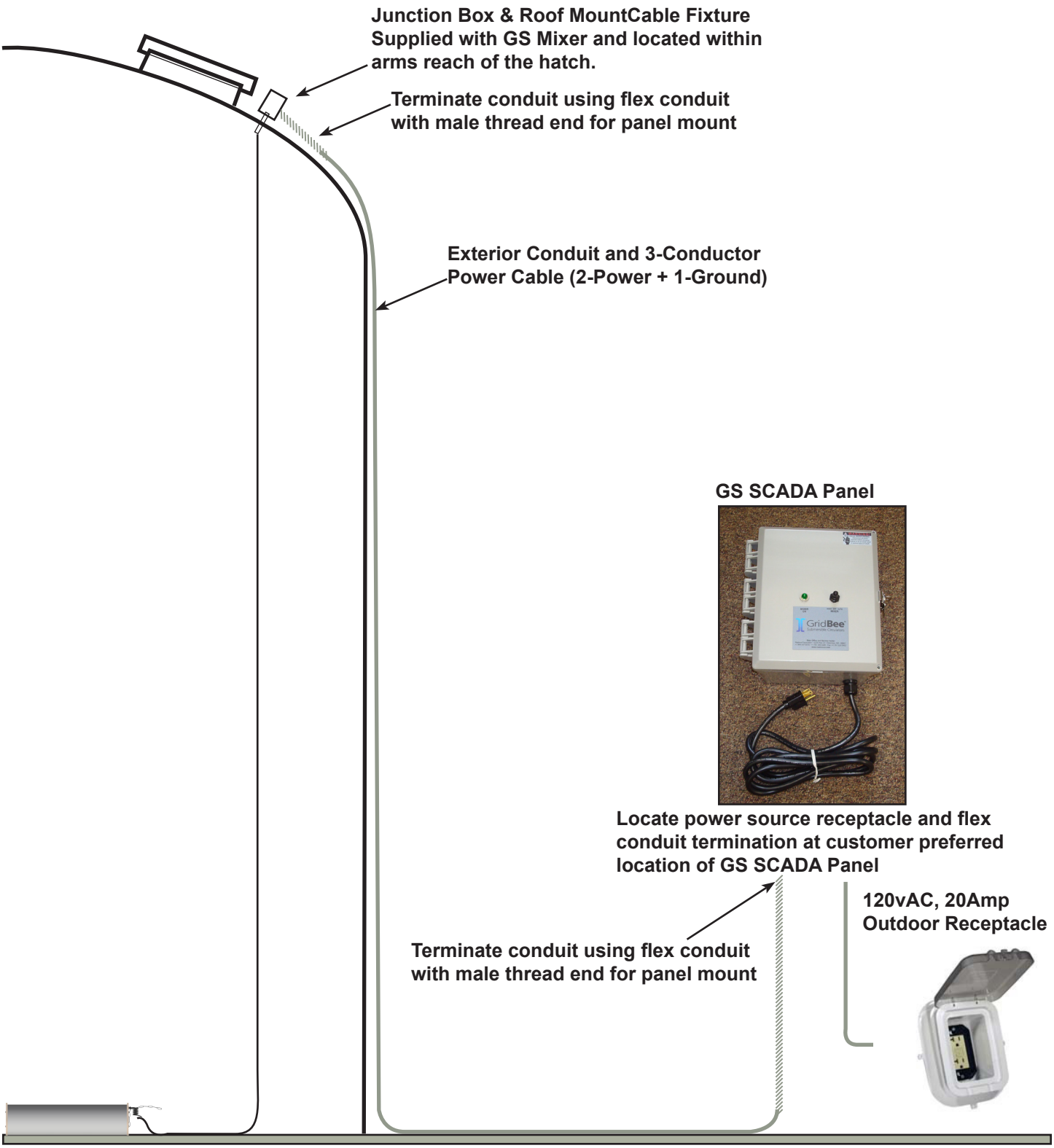

 © 2014 Medora Corp • Dickinson, ND

Wiring Diagram:

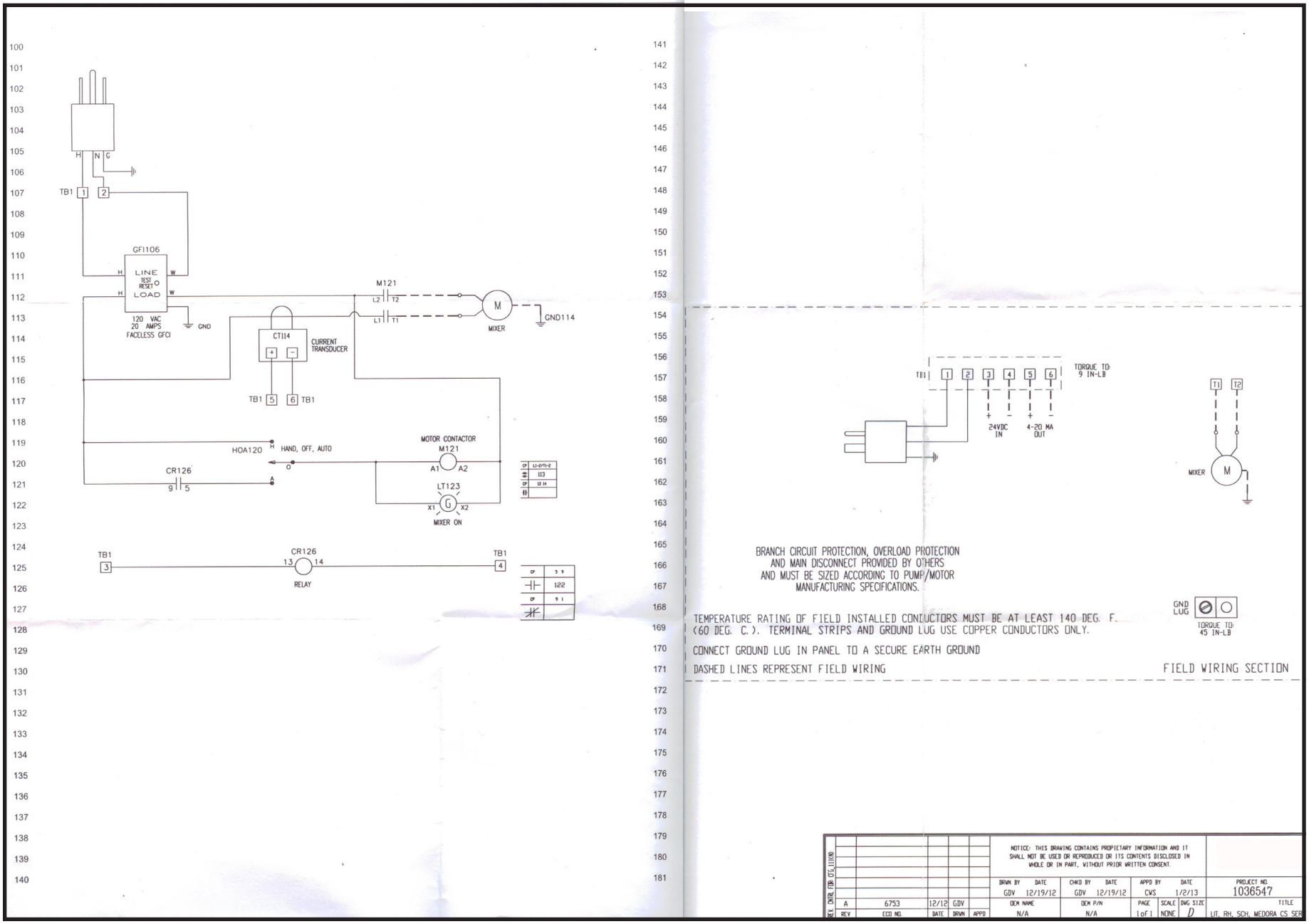

 © 2014 Medora Corp • Dickinson, ND

Main Office and Service Center
Medora Corporation • 3225 Hwy 22 • Dickinson, ND • 58601
+1 (701) 225-4495 • Fax (701) 225-0002 • www.medoraco.com

Medora Corporation's potable water products for US distribution are certified to NSF/ANSI Standard 61 and Annex G for low lead content. But the certification process can be complicated due to these factors:

1. There are three certifying agencies in the US; NSF®, UL®, and CSA®.
2. Medora's products are designed for use thoughout the world, and therefore need to be available in both 50Hz and 60 Hz, both 1 phase and 3 phase, and with voltages that can be 120v, 208v, 230v, 240v, and 480v. In addition, submersible motors can have a diameter or 4 inches, 6 inches or 8 inches. So there are many different motors wich can be used on each of Medora's product.
3. Submersible pump ends have the same issues, there are many different models available within each series of pump end, depending on the number of impellers and impeller trim.
4. So Medora's SN-10 system below, for example, if it was certifed as a complete unit, would need about dozens of certifications to allow for every possible motor end and pump end that might be used. That would not be practical. Therefore, following the lead of many motor and pump companies, Medora certifies some of its products as "less motor" or "less motor and less pump", and then uses a certified motor and pump when it ships the system.

Below is a table that shows the certifications for Medora's potable water equipment. Please call if there are any questions or if further information is needed. Thank you.

Medora Brand Name	Medora Model #		NSF	UL	CSA
			Standards: NSF/ANSI Std 61, plus Annex G	Standards: NSF/ANSI Std 61	Standards: Annex G
	Link to certifications applicable to Medora's potable water system equipment:	>	http://www.nsf.org/Certified/PwsComponents/Listings.asp?Company=3K440&Standard=061	http://database.ul.com/cgi-bin/XYV/template/LISEXT/1FRAME/showpage.html?name=FDNP.MH18335&ccnshorttitle=Drinking+Water+System+Components&objid=1074261656&cfgid=1073741824&version=versionless&parent_id=1073986524&sequence=1	http://www.csagroup.org/us/en/services/testing-and-certification/certified-product-listing/certficate/080980_C_000|6853-01
SolarBee	SB series solar powered floating mixing systems, all models	>	Complete system		
GridBee	GF series electric floating mixing systems, all models	>	Complete system		
GridBee	GS-9 mixing system	>	GS-9 system less motor	Motor, 60 or 50 Hz, 1 or 3 phase	(Motor Annex G, low lead)
GridBee	GS-12-48v 48 volt mixing system	>	Complete system		
GridBee	GS-12 mixing system	>	GS-12 system less motor	Motor, 60 or 50 Hz, 1 or 3 phase	(Motor Annex G, low lead)
GridBee	GS-12-v2 mixing system	>	GS-12 v2 system less motor and less pump	Motor, 60 or 50 Hz, 1 or 3 phase Pump	(Motor and Pump, Annex G, low lead)
GridBee	GS-14-v2 mixing system	>	GS-14 v2 system less motor and less pump	Motor, 60 or 50 Hz, 1 or 3 phase Pump	(Motor and Pump, Annex G, low lead)
GridBee	SN-3 3-hp THM removal system	>	SN-3 system less motor and less pump	Motor, 60 or 50 Hz, 1 or 3 phase Pump	(Motor and Pump, Annex G, low lead)
GridBee	SN-5 5hp THM removal system	>	SN-5 system less motor and less pump	Motor, 60 or 50 Hz, 1 or 3 phase Pump	(Motor and Pump, Annex G, low lead)
GridBee	SN-10 10-hp THM removal system	>	SN-10 system less motor and less pump	Motor, 60 or 50 Hz, 1 or 3 phase Pump	(Motor and Pump, Annex G, low lead)
GridBee	SN-15 15-hp THM removal system	>	SN-15 system less motor and less pump	Motor, 60 or 50 Hz, 1 or 3 phase Pump	(Motor and Pump, Annex G, low lead)

Warranty Statement:

Limited Replacement Warranty:
The GridBee Series GS mixers and control boxes are warranted to be free of defective parts, materials, and workmanship for a period of five years from the date of purchase. This warranty is valid only for use of the equipment in accordance with the owner's manual and any initial and ongoing factory recommendations. This warranty is limited to the repair or replacement of defective components only and does not apply to normal wear and tear. Also, there is no liability for consequential damages of any type.

EXCEPT AS STATED ABOVE, MEDORA CORPORATION AND ITS AFFILIATES EXPRESSLY DISCLAIM ANY AND ALL EXPRESS OR IMPLIED CONDITIONS, REPRESENTATIONS AND WARRANTIES ON PRODUCTS FURNISHED HEREUNDER, INCLUDING WITHOUT LIMITATION ALL IMPLIED WARRANTIES OF MERCHANTABILITY OR FITNESS FOR A PARTICULAR PURPOSE.

Please consult your state law regarding this warranty as certain states may have legal provisions affecting the scope of this warranty.

Limitation of Liability:
Many of the employees at Medora Corporation have extensive scientific and practical knowledge relating to solving water quality problems. From time to time, they may offer solicited or unsolicited advice, ideas, judgment or opinions on how to deal with certain situations, none of which offers a guarantee of future events. Due to the many factors, complexity and uncertainty involved in solving water problems, you agree to release and indemnify Medora Corporation and its affiliates, employees and agents from and against any and all claims, liabilities, costs and expenses which such indemnified party may incur or become subject to related to or arising out of any services or products furnished by Medora Corporation to you, except to the extent that any claim, liability or expense results from the gross negligence or intentional misconduct of an indemnified party as determined in a final judgment by a court of competent jurisdiction.

IN NO EVENT WILL MEDORA CORPORATION OR ITS AFFILIATES BE LIABLE FOR ANY DAMAGES CAUSED BY FAILURE OF BUYER TO PERFORM BUYER'S RESPONSIBILITIES OR FOR FOLLOWING MEDORA CORPORATION ADVICE.

IN NO EVENT WILL MEDORA CORPORATION OR ITS AFFILIATES BE LIABLE FOR ANY LOST PROFITS OR USE OR OTHER PUNITIVE, SPECIAL, EXEMPLARY, CONSEQUENTIAL, INCIDENTAL OR INDIRECT DAMAGES, HOWEVER CAUSED, ON ANY THEORY OF LIABILITY, WHETHER OR NOT MEDORA CORPORATION HAS BEEN ADVISED OF SUCH DAMAGES, OR REASONABLY COULD HAVE FORESEEN THE POSSIBILITY OF SUCH DAMAGES, OR FOR ANY CLAIM AGAINST BUYER BY ANOTHER PARTY.

GridBee®

Contents

Safety Instructions 1
Package Contents 3
Install Requirements 4
Installation 5
Startup 11
Operation 12
GS-9 Mixer Drawing 14
GS-9 SCADA Option 15
Warranty 18

GS-9 INSTALLATION & OWNER'S MANUAL

Medora Corporation • 3225 Hwy 22 • Dickinson, ND 58601
Ph +1 866 437 8076 • +1 701 225 4495 • Fax +1 701 225 0002 • www.medoraco.com

© 2014 Medora Corp.

O&M_GS9_20140703

IMPORTANT

YOU MUST COMPLETELY READ AND FULLY UNDERSTAND THESE INSTRUCTIONS BEFORE INSTALLING, OPERATING, OR SERVICING THIS UNIT.

Be sure you have read all installation, operation, maintenance, and safety instructions before you service or begin to operate this unit.

Accidents occur every year because of careless use of industrial equipment. You can avoid hazards by following these safety instructions, and applying some ordinary common sense when operating or servicing this unit.

Keep in mind that **full operator attention and alertness** are required when operating or servicing this unit.

Use common sense! Most accidents can be avoided by using **common sense and concentrating** on the job being done.

Identify all possible hazards. Determine what safeguards are needed and implement them. **Only you, the user,** understand your product and system characteristics fully. ***The ultimate responsibility for safety is with you. Your safety ultimately rests in your hands.*** Do your part and you will enjoy safe, trouble free operation for years to come.

IMPORTANT!!!

PLEASE FOLLOW ALL FEDERAL AND STATE LAWS IN REGARDS TO SAFETY REGULATIONS OF WORKING AT HEIGHTS, CONFINED SPACES, RESCUE, ETC. AS REQUIRED BY THE U.S. DEPARTMENT OF LABOR, OCCUPATIONAL SAFETY AND HEALTH ADMINISTRATION. PLEASE USE NECESSARY PPE WHEN INSTALLING AND SERVICING THIS UNIT.

SAFETY

Laceration Hazard **CAUTION: WHEN UNPACKING, BE CAREFUL AS THE PACKAGING STAPLES MAY BE SHARP AND CAUSE LACERATION IF PROPER CARE IS NOT USED.**

Entanglement Hazard

WARNING: WHEN LOWERING OR RAISING THE GS-9 MIXER, BE SURE THAT YOU AND OTHERS ARE CLEAR OF THE ELECTRIC CORD AND CHAIN TO AVOID ENTANGLEMENT!

ELECTRICAL HAZARD

WARNING: THIS EQUIPMENT CONTAINS HIGH VOLTAGE! ELECTRICAL SHOCK CAN CAUSE SERIOUS OR FATAL INJURY. ONLY QUALIFIED PERSONNEL SHOULD ATTEMPT INSTALLATION, OPERATION AND MAINTENANCE OF ELECTRICAL EQUIPMENT. REMOVE ALL SOURCES OF ELECTRICAL POWER BEFORE PERFORMING ANY SERVICE WORK TO THE SOLARBEE. USE PROPER LOCKOUT TAGOUT (LOTO) PROCEDURES TO ENSURE A SAFE WORK ENVIRONMENT.

PACKAGE CONTENTS

GS-9 Mixer

75 feet (22 meters) of submersible power cord and retrieval chain

Tank-roof junction box (mounts onto through-tank fitting)

Through-tank fitting for power cord; supports junction box and retrieval chain attach point

Kellem Grip Cord Strain Relief

1 5/16" Hole Saw

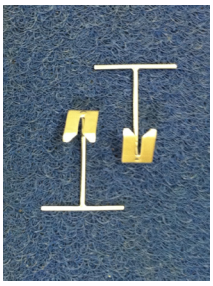

Chain Grab Tools

GS SCADA Panel
(Optional Accessory Item)

Lexel Sealant Tube

REQUIREMENTS

TOOLS REQUIRED:
Cordless Drill

Metal Hole Saw: 1-5/16” (1.313 inch / 33mm) Diameter

Chain Grab Tools

Catch bucket or box

High quality sealant (Lexel Brand)

Large Channel Lock & Large Pipe Wrench

POWER REQUIREMENT:
120 VAC, 20 amp service and means of quick power disconnect recommended

HATCH REQUIREMENT:
A 12 inch (305 mm) diameter hatch opening is required to fit the GS-9 Mixer through.

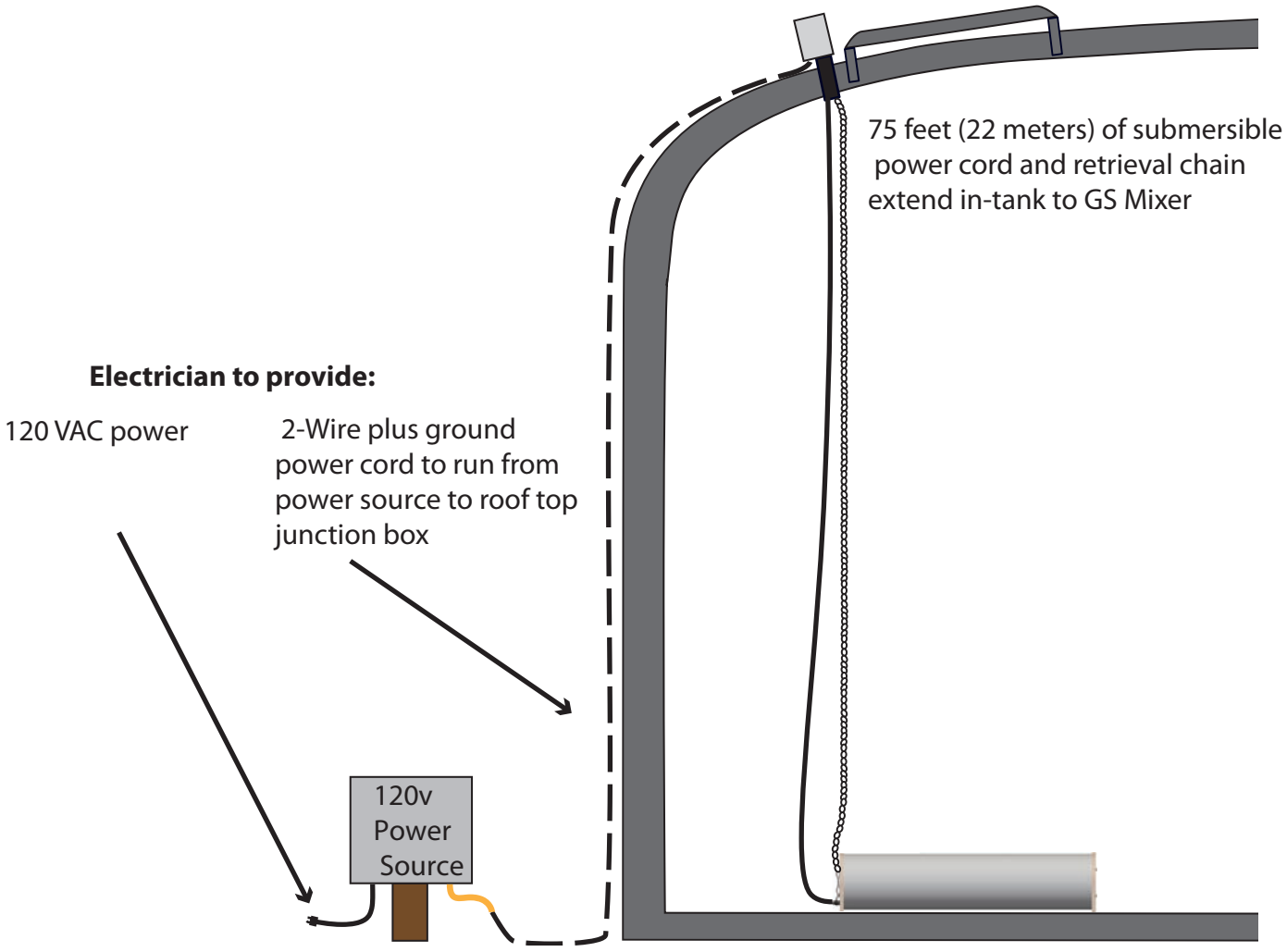

INSTALLATION

INSTALL THROUGH TANK FITTING:

STEP 1: Locate the hatch where the GS-9 Mixer will be installed through and mark a penetration point on the roof for the through tank fitting that the electric cable will pass through. When selecting a penetration location through the roof, be sure confirm the following:
A. The penetration is not going to hit an internal tank beam
B. The penetration is centered within a clear footprint of approximately 8-inch X 8-inch (20cmX20cm)
C. The penetration can be accessed on the inside of the tank with a catch bucket when reaching from the hatch.

STEP 2: Use a cordless drill with the 1-5/16 inch (33mm) hole saw and begin drilling a hole through the tank roof. A small amount of food grade vegetable oil works well for lubrication of the hole saw. Prior to completing the penetration, position a catch bucket below the penetration point to catch filings and the hole cut out. If a catch bucket is not readily available, use the cardboard box the hole saw and fittings came in to catch the filings and disc cut out from falling into the tank.

STEP 3: Thoroughly clean all surfaces around the penetration of any filings before removing the catch bucket. The penetration is now ready for a sealant application and installation of the Through Tank Fitting.

STEP 4: Apply a healthy amount of sealant on all the surrounding surfaces of the penetration (interior, exterior, and inner wall). This will prevent future corrosion of the roof around the fixture.

STEP 5: Install the Through Tank Fitting as shown below so that there is an interior and exterior nut and gasket in place prior to tightening the fixture to the roof. Adjust the height of the fixture so the top is approximately 3-1/2 inches (9cm) above tank roof. Tighten jam nut to firmly secure the fixture to the roof using a large channel lock and pipe wrench.

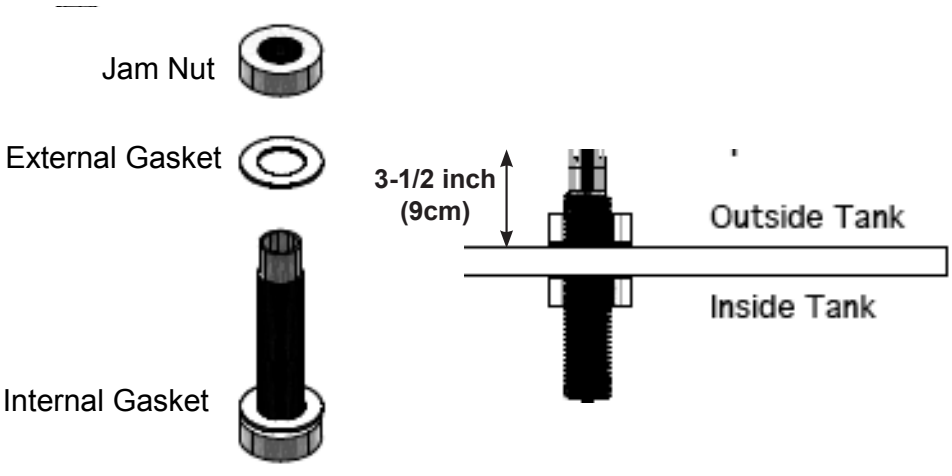

INSTALL TANK ROOF JUNCTION BOX:

STEP 1: Locate the Junction Box and the cordless drill with 1-5/16 inch (33mm) hole saw. Drill a hole through the Junction Box as shown below. This process produces fiberglass powder and residue while the hole is being drilled. It is recommended to drill the enclosure at ground level and thoroughly clean out enclosure following this procedure. This will prevent fiberglass powder or residue from getting inside the water tank.

STEP 2: Secure the Junction Box over the Through Tank Fitting with a gasket, jam nut, and stainless steel cord grip as shown. Using channel lock and pipe wrench, tighten the jam nut so the enclosure is firmly clamped to the Through Tank Fitting.

STEP 3: Notice the quick link on the interior side of the Through Tank Fitting which can be used as a secure tie off point for the retrieval chain and electric cable kellum grip during GS-9 Mixer Installation.

Quick Link

INSTALL GS-9 MIXER:

STEP 1: Plan out a safe procedure and hoist the GS-9 Mixer to the top of the tank near the hatch opening. Use the chain and submersible cable attached to the GS-9 Mixer for lifting and supporting the weight. Keep clear of chain and electric cord to avoid entanglement.

STEP 2: Tie off the tail end of the access chain and electric cord kellum grip to the quick link at the bottom the Through Tank Fitting.

STEP 3: Slowly and carefully lower the GS-9 Mixer down to the tank floor until it is resting on the bottom. The proper position is when the flat edge of the GS-9 Mixer ends are resting on the floor and GS-9 Mixer discharge slots are facing upward as shown below.

Entanglement Hazard

WARNING: WHEN LOWERING OR RAISING THE GS-9 MIXER, BE SURE THAT YOU AND OTHERS ARE CLEAR OF THE ELECTRIC CORD AND CHAIN TO AVOID ENTANGLEMENT!

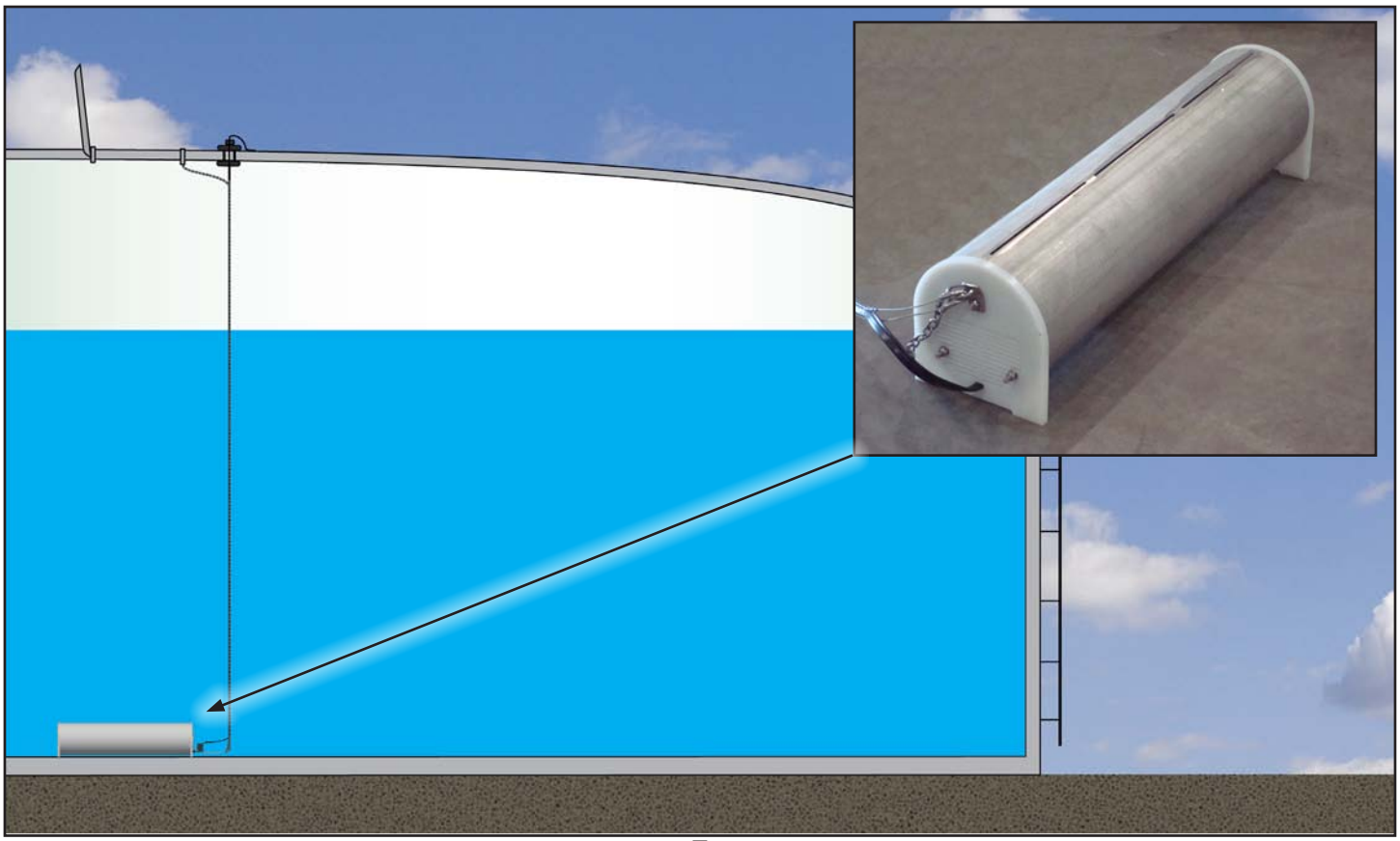

INSTALL GS-9 MIXER (Suspended Configuration):

STEP 1: Locate the short separate supsension chain and using quick link attach it to the 2nd Lift Tab on the end of the GS-9 opposite the electric cord end. Tighten the quick link with a pliers.

STEP 2: Using a quick link, combine the two short pieces of chain and the bottom end of the long retrieval chain as shown below.

STEP 3: Connect the top of the retrieval chain to the top quick link. Then slowly and carefully lower the GS-9 Mixer down to just above the tank floor or as low as possible with GS-9 Mixer hanging horizontally with discharge slots facing directly upward as shown below.

Entanglement Hazard

WARNING: WHEN LOWERING OR RAISING THE GS-9 MIXER, BE SURE THAT YOU AND OTHERS ARE CLEAR OF THE ELECTRIC CORD AND CHAIN TO AVOID ENTANGLEMENT!

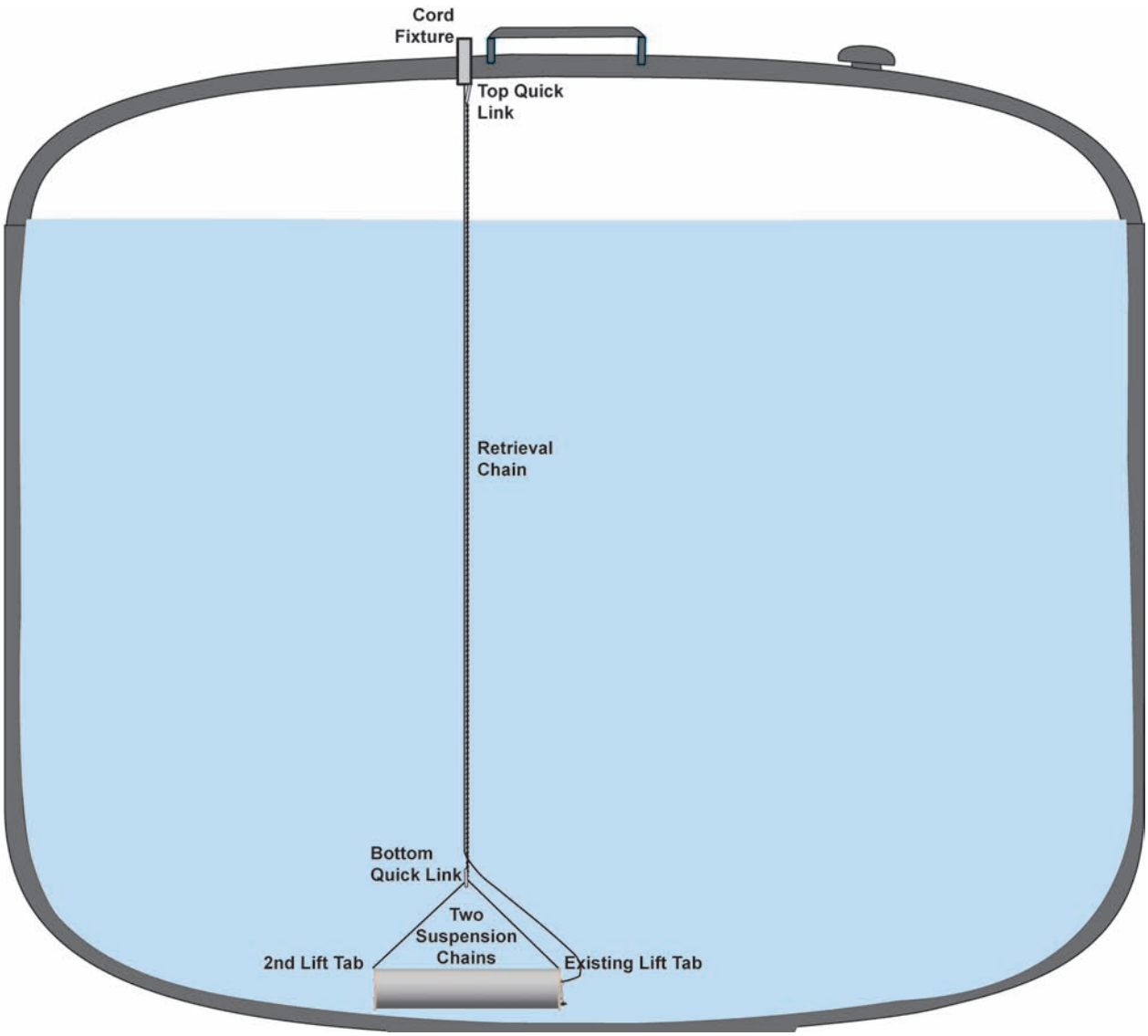

PULL ELECTRIC CORD:

STEP 1: With the GS-9 Mixer resting on the floor, pull the electric cord up through the Through Tank Fitting and Stainless Steel Cord Grip into the Junction Box as shown.

STEP 2: With extra electric cable to spare inside Junction Box, tighten the Stainless Steel Cord Grip.

STEP 3: Adjust along the electric cable on the interior so that the weight of the electric cable places the kellum grip in tension with slack in the electric cable going into the Through Tank Fixture.

STEP 4: Once kellum grip is adjusted, connect it to the quick link and confirm that everything is in place as shown below.

GS-9 INSTALLATION & WIRING:

Only qualified personnel should perform the following electrical connections.

ELECTRICAL HAZARD

WARNING: THIS EQUIPMENT CONTAINS HIGH VOLTAGE! ELECTRICAL SHOCK CAN CAUSE SERIOUS OR FATAL INJURY. ONLY QUALIFIED PERSONNEL SHOULD ATTEMPT INSTALLATION, OPERATION AND MAINTENANCE OF ELECTRICAL EQUIPMENT. REMOVE ALL SOURCES OF ELECTRICAL POWER BEFORE PERFORMING ANY SERVICE WORK TO THE SOLARBEE. USE PROPER LOCKOUT TAGOUT (LOTO) PROCEDURES TO ENSURE A SAFE WORK ENVIRONMENT.

STEP 1: Determine the location of the 120 volt source to supply power to the GS-9 Mixer. It is recommended that the 120 volt power source include GFCI, fuse protection and a quick means of disconnecting power to the GS-9 Mixer.

STEP 2: Once the 120 volt source is established, run adequately sized power conductor between the Control Box and Junction Box at the top of the tank. The submersible motor is 2-wire plus ground, so 2 power conductors and a ground conductor will be needed. The conductor should be sized for less than 10.0 volt drop while operating at 120 volts AC, 11.0 Amps. Power Conductor spanning from power source to junction box at tank roof not included.

STEP 3: Using color code below, perform a splice connection of the power and ground conductors to the termination of the submersible cable within the Junction Box.

COLOR CODE:
WHITE : 120VAC Neutral BLACK : 120VAC Hot GREEN : Ground RED (Not Used)

STEP 4: Following connection of the power and ground conductors up at the junction box, close the Junction Box latching it shut. The Junction Box contains a pad-lockable latch.

STARTUP

STARTUP SYSTEM:

STEP 1: With GS-9 Mixer submerged, engergize by applying 120 VAC Power.

I**MPORTANT: When tank is drained, be sure to turn the GS-9 Mixer off to prevent damage and compromised life. Unit is designed for submersed operation only. The GS-9 can be supplied with an optional SCADA package that allows for PLC automated On/Off control triggered by water level.**

STEP 2: When qualified personnel are present, use an AC Clamp-Style Ammeter to measure current passing through 120 VAC circuit. During normal operation, the GS-9 will draw between 8.5 and 11.5 Amps.

OPERATION

The GS-9 is designed to circulate water by bringing water from along the tank floor and sending it upward and out across the water surface in layers causing direct and induced mixing effects. The near laminar layers flow outward radially, in diverging stream lines directly above the GS-9. As flow leaves the GS-9, vertical flow is induced in between the water being drawn below and the water above. At the level of the flow intake, water is drawn from all inner walls and along the floor of the tank. As this lower layer of fluid makes its way inward with converging streamlines to the GS-9, the water is forced upward, toward the surface, providing gentle mixing, de-stratification, and surface renewal.

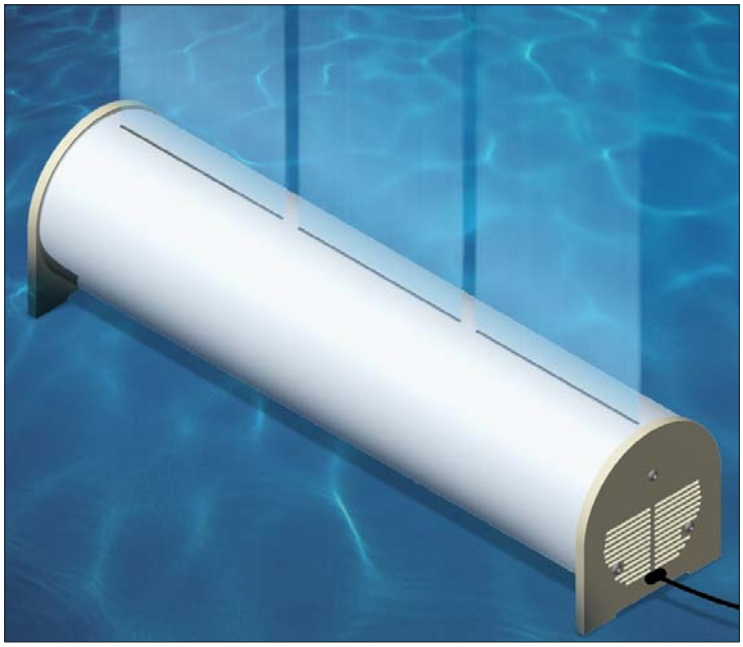

Flow Coming Out Of GS-9

During operation, a visible flow can be observed at the surface above the GS-9. The GS-9 is designed to operate at a full speed and full flow continuously.

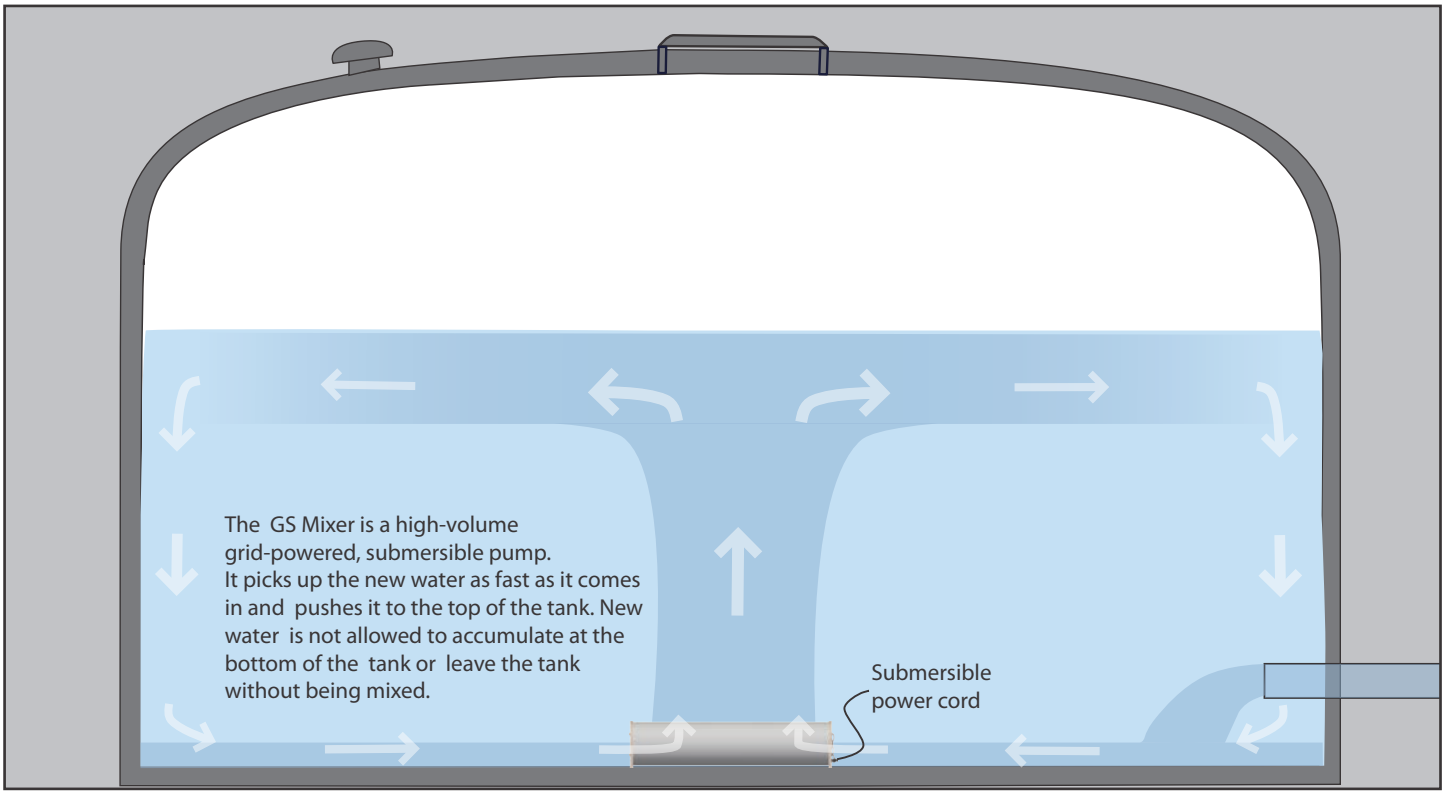

GS-9 Flow Pattern

GridBee®

GS-9 FEATURES

Technology Description	Submersible, grid powered, circulation equipment for potable water tanks and reservoirs. Designed for continuous operation and can be installed through roof hatch without requiring tank entry.
Minimum Access Opening / Machine Size/Weight	Machine can be installed through 12 inch (30 cm) diameter opening. Assembled machine is 2 feet (0.6 meter) in length X 10 inch (25.4 cm) in diameter and weighs 65 pounds (34 kg).
Materials of Construction	316 stainless steel shell and hardware construction. GS-9 has been constructed using safe materials for contact with potable water. See certifications section below.
Submersible Motor	Submersible motor, designed for continuous operation, low power requirement, direct drive, no gearbox and no lubrication schedule required. See certifications section below.
Power Supply	The standard 120VAC motor requires 120VAC/1PH power source outlet (20 Amp Service), nominal power consumption is 750 Watts. The GS-9 120v unit draws approximately 11.0 Amps @ 120VAC / 60Hz.
Wiring	75 ft (22 m) of submersible power conductor included to terminate within junction box at top of tank. Junction box, also included.
Sealed Tank Fitting	316 stainless steel tank fitting and cord grip included for sealed cord entry through tank roof.
Retrieval Chain	75 ft (22 m) of 316 stainless steel retrieval chain included for machine installation and retrieval without requiring tank entry.
Chlorine Boost Connection	Chlorine boost connection point, 3/8" NPT Male, on machine for adapting to 1/2" (13mm) hose for fast chlorine dispersion during in-reservoir boosting.
Low Elevation Intake	Intake draws water in a horizontal layer within 8 inches (15 cm) of the tank or reservoir floor. Suspension kit included for suspending the GS-9 if required.
Minimum Water Depth	At depths below 2 feet (0.6 meters), the machine should be shut off to prevent damage.
Accessories Available	(1) Portable Chlorine Boost Hose and Boost Pump System, (2) Control and SCADA Panel
Warranty	Limited 5-year parts and labor warranty.
Certifications	Medora Corporation's potable water products are certified to ANSI/NSF Standard 61, including Annex G for low-lead content. Learn more at: www.medoraco.com/std61

Subject to change without notice.

Medora Corporation • 3225 Hwy 22 • Dickinson, ND 58601
+1 866 437 8076 • Ph +1 701 225 4495 • Fax +1 701 225 0002 • www.medoraco.com
© 2014 Medora Corp.

GS-9 MIXER DWG

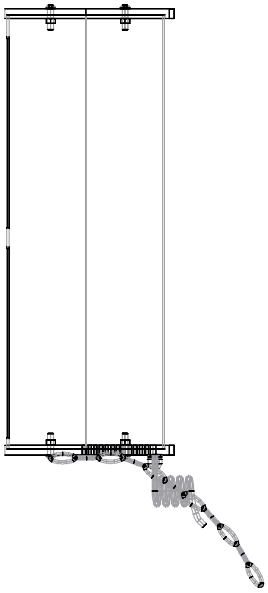

Weight: 65lb (34 kg)	PROPRIETARY AND CONFIDENTIAL THE INFORMATION CONTAINED IN THIS DRAWING IS THE SOLE PROPERTY OF SOLARBEE, INC. ANY REPRODUCTION IN PART OR AS A WHOLE WITHOUT THE WRITTEN PERMISSION OF SOLARBEE, INC. IS PROHIBITED.	GridBee	
	TITLE: MODEL GS9		
SCALE: 1:8	DRAWN BY: SolarBee	PART NO: OVERALL DIMENSIONS	REV
DATE: 5/13/2014		FILE NAME: DimensionDwg_GS9_20140513	

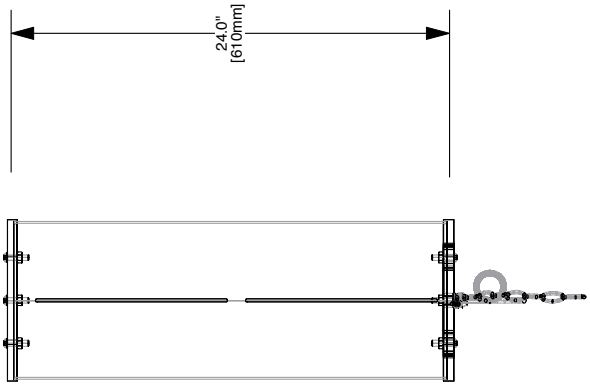

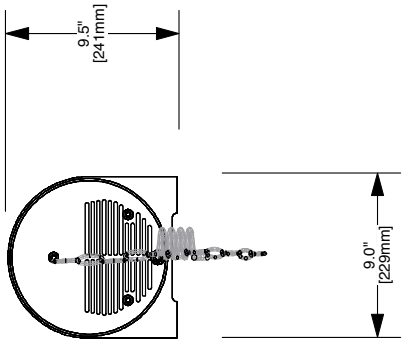

Main Office and Service Center
Medora Corporation
3225 Hwy 22, Dickinson, ND 58601
+1 866 437 8076 • +1 701 225 4495 • Fax: +1 701 225 0002

GridBee GS Mixer SCADA Panel

The GridBee GS Mixer SCADA Accessory Package offers the ability to monitor a GS Mixer for proper operation through a 4-20mA output and remotely control on or off by a local PLC. The unit is contained within a NEMA 4X enclosure to be mounted near the 120 VAC Power Source. Additonal features include a Ground Fault Circuit Interrupter (GFCI) Hand Off Auto (HOA) 3-position switch and operation indication light. Certified UL508.

Monitoring: The 4-20mA signal offers a scaled value of the mixer operating current which during proper operation falls within a specified range. 24 VDC power required, not included.

On/Off Control: A relay is available with a 24 VDC coil to offer remote on or off control while the HOA switch is positioned in Auto for conditions requiring the unit to be shut off such as low water level.

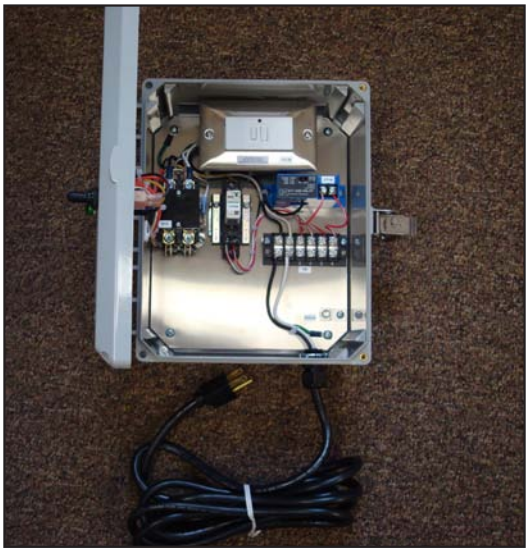

Specifications:

Power Source Required: 120vAC, 20 Amp Outdoor Rated Receptacle

Enclosure: 10 inch X 8 inch X 4 inch, NEMA 4X Molded Carlon
Mounting Feet Hole Pattern: 6.25 inch wide X 11.375 inch high
Back Insert Hole Pattern: 6.25 inch wide X 8.25 inch high

4-20mA Module:
Power Source Required: 5-40 VDC
Linear Scaling: Mixer Current = 1.25 * (mA Value) - 5
4 mA = 0 Amps Mixer Current 20 mA = 20 Amps Mixer Current
Normal Operating Range = 10.0 mA - 13.0 mA (8.5 A - 11.5 A)

On/Off Relay:
Coil Power: 24 VDC Nominal
Type: Normally Open, Can be field adjusted to Normally Closed if required.

See Page 2 For Integration Diagram and Page 3 For Panel Wiring Diagram:

 © 2014 Medora Corp • Dickinson, ND

Integration Diagram:

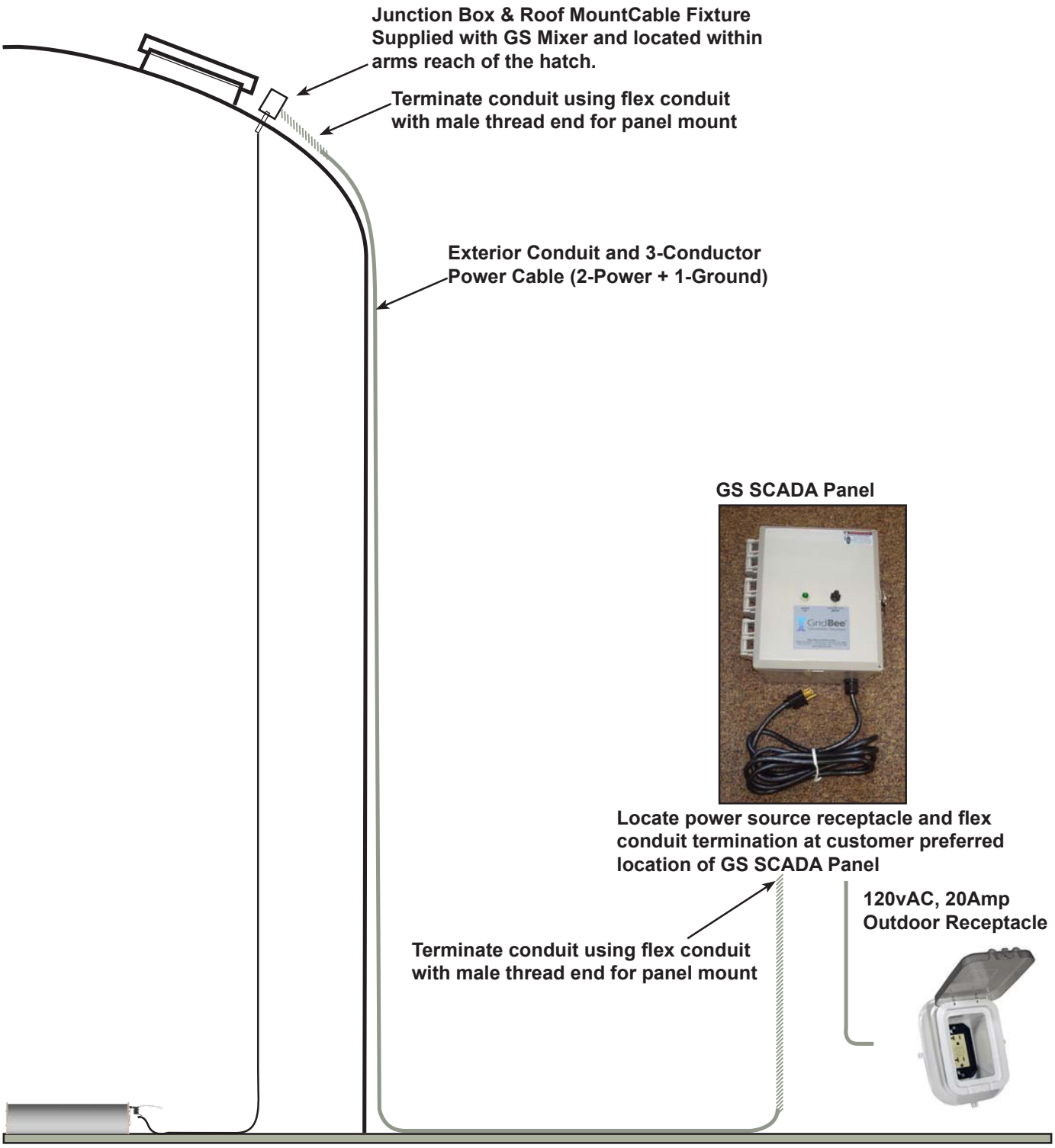

 © 2014 Medora Corp • Dickinson, ND

Wiring Diagram:

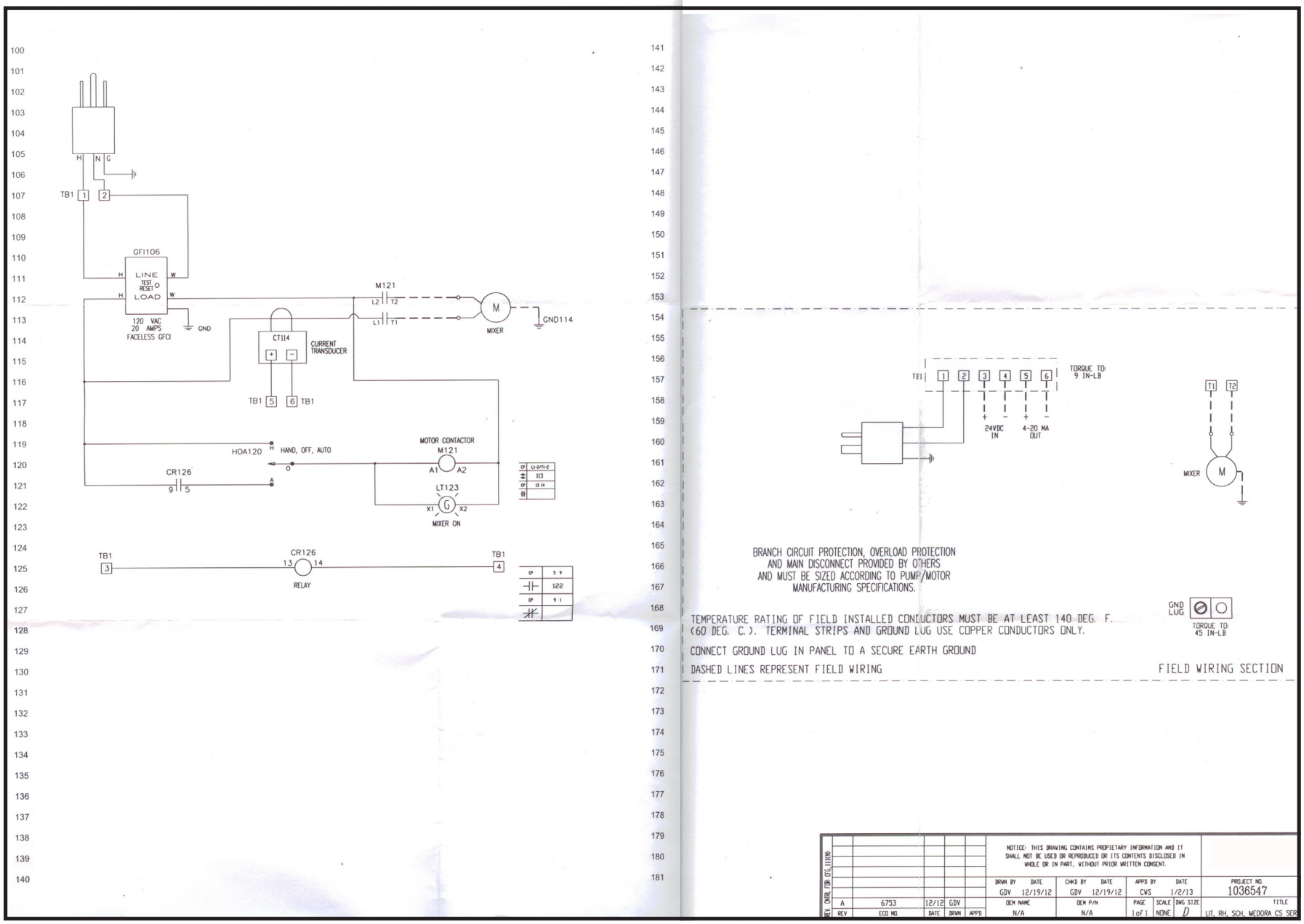

 © 2014 Medora Corp • Dickinson, ND

Warranty Statement:

Limited Replacement Warranty:
The GridBee Series GS mixers and control boxes are warranted to be free of defective parts, materials, and workmanship for a period of five years from the date of purchase. This warranty is valid only for use of the equipment in accordance with the owner's manual and any initial and ongoing factory recommendations. This warranty is limited to the repair or replacement of defective components only and does not apply to normal wear and tear. Also, there is no liability for consequential damages of any type.

EXCEPT AS STATED ABOVE, MEDORA CORPORATION AND ITS AFFILIATES EXPRESSLY DISCLAIM ANY AND ALL EXPRESS OR IMPLIED CONDITIONS, REPRESENTATIONS AND WARRANTIES ON PRODUCTS FURNISHED HEREUNDER, INCLUDING WITHOUT LIMITATION ALL IMPLIED WARRANTIES OF MERCHANTABILITY OR FITNESS FOR A PARTICULAR PURPOSE.

Please consult your state law regarding this warranty as certain states may have legal provisions affecting the scope of this warranty.

Limitation of Liability:
Many of the employees at Medora Corporation have extensive scientific and practical knowledge relating to solving water quality problems. From time to time, they may offer solicited or unsolicited advice, ideas, judgment or opinions on how to deal with certain situations, none of which offers a guarantee of future events. Due to the many factors, complexity and uncertainty involved in solving water problems, you agree to release and indemnify Medora Corporation and its affiliates, employees and agents from and against any and all claims, liabilities, costs and expenses which such indemnified party may incur or become subject to related to or arising out of any services or products furnished by Medora Corporation to you, except to the extent that any claim, liability or expense results from the gross negligence or intentional misconduct of an indemnified party as determined in a final judgment by a court of competent jurisdiction.

IN NO EVENT WILL MEDORA CORPORATION OR ITS AFFILIATES BE LIABLE FOR ANY DAMAGES CAUSED BY FAILURE OF BUYER TO PERFORM BUYER'S RESPONSIBILITIES OR FOR FOLLOWING MEDORA CORPORATION ADVICE.

IN NO EVENT WILL MEDORA CORPORATION OR ITS AFFILIATES BE LIABLE FOR ANY LOST PROFITS OR USE OR OTHER PUNITIVE, SPECIAL, EXEMPLARY, CONSEQUENTIAL, INCIDENTAL OR INDIRECT DAMAGES, HOWEVER CAUSED, ON ANY THEORY OF LIABILITY, WHETHER OR NOT MEDORA CORPORATION HAS BEEN ADVISED OF SUCH DAMAGES, OR REASONABLY COULD HAVE FORESEEN THE POSSIBILITY OF SUCH DAMAGES, OR FOR ANY CLAIM AGAINST BUYER BY ANOTHER PARTY.

Detail Bill of Material

Project Name: Sand Coulee WTP
General Order No:
Negotiation No: D3840708X4K1
Alternate No: 0000

Item No.	Qty	Product	Description
	1	Panelboards	30Circuits, 225A, Fully Rated, 120/240V 1Ph 3W, Copper Bus, 10k AIC, 100A, EDB Main Breaker[Bottom Fed], Surface Mounted

Catalog No P1C225BB30CH01
Designation Panel LP

Qty	List of Materials
1	100A, EDB Main Breaker
7	20A, 1P BAB Branch Breaker
3	20A, 1P QBGF Branch Breaker, GFCI - 5mA
16	1P BAB Branch Provision Only
2	30A, 2P BAB Branch Breaker
1	Copper Main Bus, 225 Amps
1	Std. Bolted Cu Ground Bar (Cu Cable Only)
1	Panel Nameplate - White with Black Letters
1	Service Entrance Label
1	Type 1 Enclosure: EZB2042R
1	EZ Trim, Door in Door, Concealed Hardware: EZT2042S

Item No.	Qty	Product	Description
	1	Safety Switches	Safety Switches

Catalog No DT224URK
Designation MTS

Qty	List of Materials
1	Neutral / Ground Kit : DT200NK (Field Installed)
1	Double Throw Switch - Non-Fusible, 2-Pole, 240 VAC, 200 A, NEMA 3R

Item No.	Qty	Product	Description
	1	SPD	Side Mounted SPDs: CVX Series, 100 kA, 240S, 240V Single Split Phase (3W+G), NEMA 4X Enclosure, Basic Package

Catalog No CVX100-240S
Designation TVSS

Qty	List of Materials
1	CVX, 100 kA, 240S, NEMA 4X Enclosure

Eaton Selling Policy 25-000 applies.

All orders must be released for manufacture within 90 days of date of order entry. If approval drawings are required, drawings must be returned approved for release within 60 days of mailing. If drawings are not returned accordingly, and/or if shipment is delayed for any reason, the price of the order will increase by 1.0% per month or fraction there of for the time the shipment is delayed.

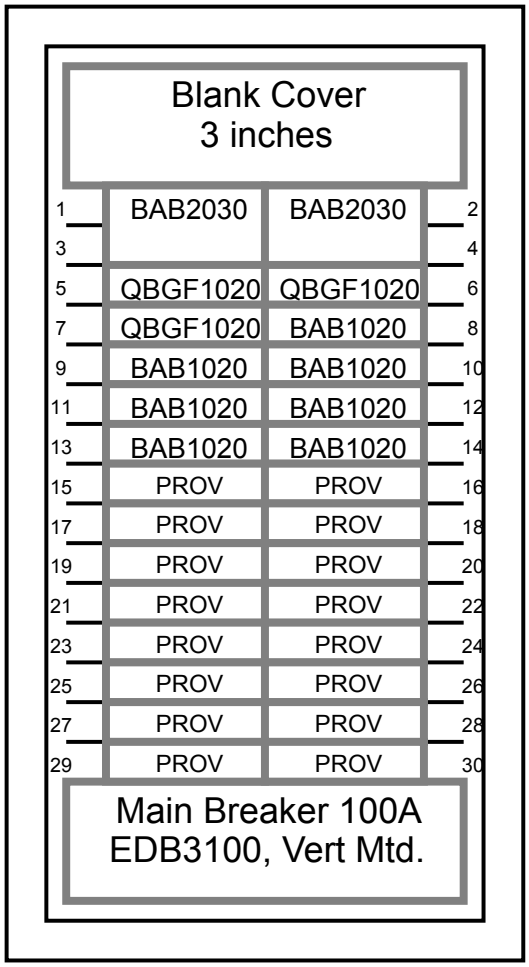

General Information **(Section 1 of 1)**

Service Voltage:	120/240V 1Ph 3W	**Enclosure:**	Type 1
Bus Rating & Type:	225A Copper	**Neutral Rating:**	225A
Ground Bar:	Std. Bolted Copper, Cu cable only		
S.C. Rating:	10k A.I.C. Fully Rated		

Main Device Type:	Main Breaker - Bottom Cable Entry - A & C Phase Connection
Main Terminals:	Mechanical - (1) #14-1/0 (Cu/Al)
Neutral Terminals:	Mechanical - (1) #6-300 kcmil (Cu/Al)
Box Catalog No.:	EZB2042R
Trim:	EZ Trim, Door in Door, Concealed Hardware (EZT2042S)
	Surface Mounted
Box Dimensions:	42.00" [1066.8mm]H x 20.00" [1066.8mm]W x 5.75" [146.1mm]D
Min. Gutter Size:	Top = 5.5" [139.7mm] Bottom = 5.5" [139.7mm]
	Left = 6.0" [152.4mm] Right = 6.0" [152.4mm]

Panel ID Nameplate: **(1) Panel LP**
Type: Plastic, adhesive-backed **(2) 120/240V 1Ph 3W**
Color: White with Black Letters **(3)**

UL
Service Entrance Label Y

Trim Lock: Standard Lock & Key (Keyed WEM2)
Circuit Directory: Plastic Sleeve with Card
Main Circuit Breaker Trip Type: Thermal-Magnetic.

Device Modifications:

Ref #	Description

Notes:

Branch Devices

Qty	Poles	Trip	Frame	Amps	kAIC
7	1	20	BAB	100	10
3	1	20	QBGF	100	10
2	2	30	BAB	100	10
16	1		PROV		

The information on this document is created by Eaton Corporation. It is disclosed in confidence and it is only to be used for the purpose in which it is supplied.

PREPARED BY: KENT BUTTERFIELD	DATE: 8/1/2014	**Eaton**			
APPROVED BY	DATE	JOB NAME: Sand Coulee WTP			
		DESIGNATION: Panel LP			
VERSION: 1.0.0.1		TYPE: PRL1a		DRAWING TYPE: Customer Approval	
NEG-ALT Number: D3840708X4K1-0000	REVISION: 0	DWG SIZE: A	G.O.	ITEM	SHEET: 1 of 1

Safety Switch General Information

Global Specifications

System Voltage	240 VAC
Switch Type	Double Throw - Heavy Duty
Poles/Blades	2-Pole
Amperage	200
Protection	Non-Fusible with No Neutral
Enclosure Type	NEMA 3R
Switch Lugs	Standard
Fungus Proof Treatment	N
Lock-On Provision	N
Fuse Pullers	N
Control Pole	N
Ground Lugs	N
316 Stainless	N
Stainless Mechanism	N
Mill Duty	N

Nameplate

Field Installed Kits

QUANTITY	DESCRIPTION
1	Neutral / Ground Kit : DT200NK (Field Installed)

Safety Switch Catalog No.

DT224URK

The information on this document is created by Eaton Corporation. It is disclosed in confidence and it is only to be used for the purpose in which it is supplied.

PREPARED BY: KENT BUTTERFIELD	DATE: 8/1/2014	**Eaton**			
APPROVED BY:	DATE:	JOB NAME: Sand Coulee WTP			
		DESIGNATION: MTS			
VERSION: 1.0.0.1		TYPE: Safety Switch General Information		DRAWING TYPE: Customer Appr.	
NEG-ALT Number: D3840708X4K1-0000	REVISION: 0	DWG SIZE: A	G.O.	ITEM	SHEET: 1 of 1

Date PDF Generated:9/25/2012 Page 1 of 1

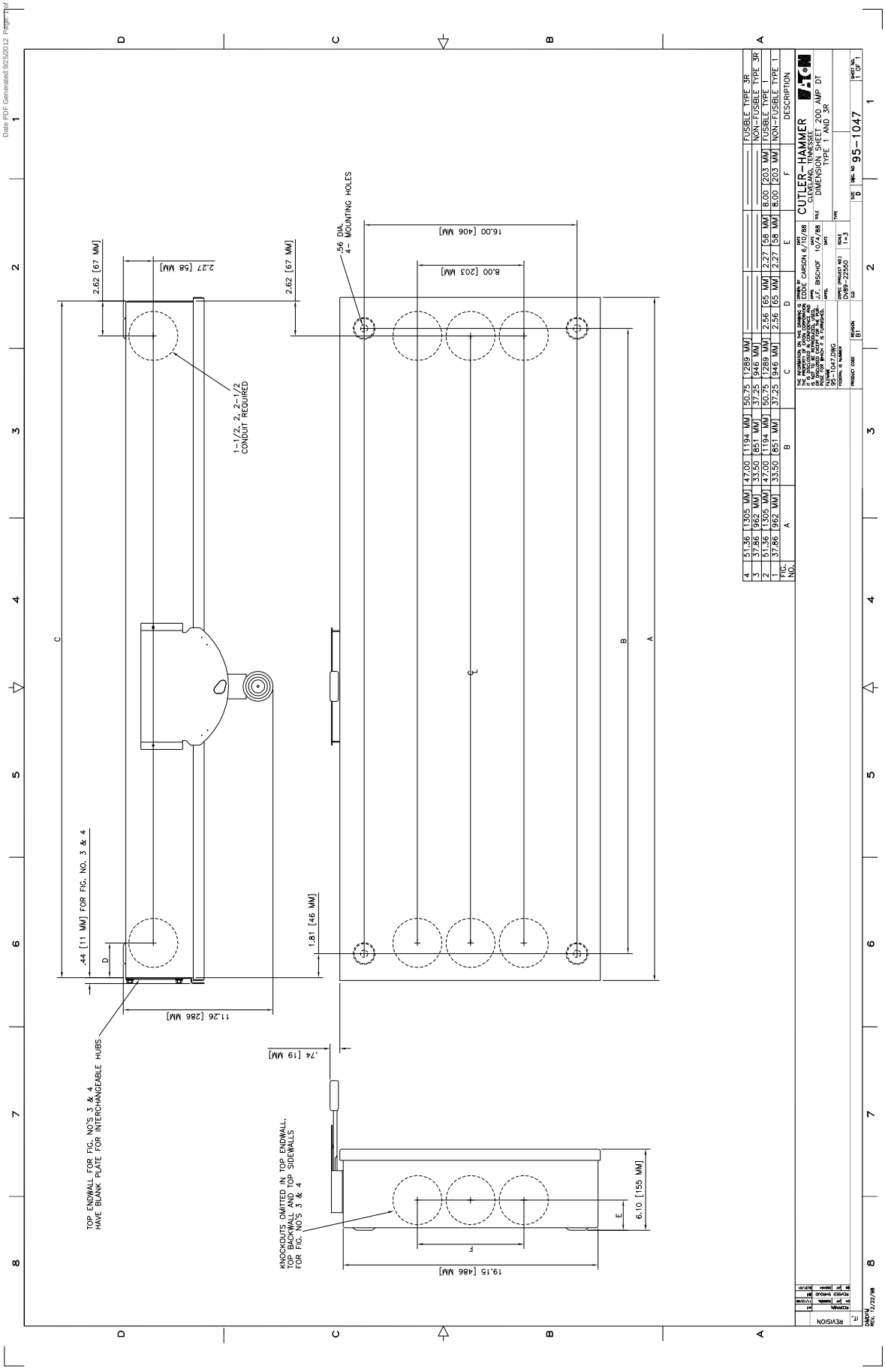

FIG. NO.	A	B	C	D	E	F	DESCRIPTION
4	51.36 [1305 MM]	47.00 [1194 MM]	50.75 [1289 MM]	2.56	65 MM	2.27 58 MM	8.00 [203 MM]	FUSIBLE TYPE 3R
3	37.86 [962 MM]	33.50 [851 MM]	37.25 [946 MM]	2.56	65 MM	2.27 58 MM	8.00 [203 MM]	FUSIBLE TYPE 1
2	51.36 [1305 MM]	47.00 [1194 MM]	50.75 [1289 MM]	2.56	65 MM	2.27 58 MM	8.00 [203 MM]	FUSIBLE TYPE 3R
1	37.86 [962 MM]	33.50 [851 MM]	37.25 [946 MM]	2.56	65 MM	2.27 58 MM	8.00 [203 MM]	NON-FUSIBLE TYPE 1

CUTLER-HAMMER
CLEVELAND, TENNESSEE
DIMENSIONAL SHEET 200 AMP DT TYPE 1 AND 3R

DRWG. NO. 95-1047
SHEET NO. 1 OF 1
SCALE 1=3
DRWN BY EDDIE CARSON 6/10/88
CHKD BY BISCHOF 10/4/88
DRWG. PROJECT NO. DV89-22550
PRODUCT CODE

Item Number:	Catalog Number:	Designation:
GO/NEG-Alt-Date: D3840708X4K1-0000-8/1/2014		Job Name: Sand Coulee WTP
	DT224URK	MTS

CVX050/100

Contents

Description	*Page*
Introduction	**V3-T2-2**
Product Overview	**V3-T2-5**
SPD Series for Integration into Electrical Distribution Equipment	**V3-T2-7**
SPD Series for Mounting External to Electrical Distribution Equipment	**V3-T2-11**
SPV Surge Protective Device	**V3-T2-16**
CVX050/100	
Catalog Number Selection	**V3-T2-19**
Technical Data and Specifications	**V3-T2-19**
Dimensions	**V3-T2-20**
SP1 Surge Protective Device	**V3-T2-21**
SP2 Surge Protective Device	**V3-T2-23**
AEGIS Powerline Filters	**V3-T2-25**
Sag Ride-Through (SRT)	**V3-T2-30**
Electronic Voltage Regulator (EVR)	**V3-T2-36**

CVX050/100

Product Description

With over two decades of experience in the surge suppression industry and extensive R&D initiatives, Eaton is considered a world leader in surge protective device (SPD) manufacturing. All of Eaton's products are manufactured in an ISO® 9001:2000 and ISO 14001 certified facility.

Eaton's CVX050/100 models are rugged, cost-effective, high-quality SPDs that feature self-protected MOVs that eliminate the failure characteristics of standard metal oxide varistors. This technology results in a fail-safe device that monitors the status of the metal oxide disk and disconnects itself from the power system when the disk is approaching breakdown.

The CVX050/100 is easy to install adjacent or even internal to electrical equipment. When installing an SPD in a retrofit environment, it is important to mount the device as close to the electrical equipment as possible. Keep the wiring (lead length) between the electrical equipment and SPD as short as possible, and twist or wire tie the conductors together to reduce the wire's impedance factor.

Application Description

Eaton's CVX050 and CVX100 SPDs protect electronic equipment from damaging transients. These units are suitable for medium and low exposure level applications that require cost-effective, high quality system protection including:

- Residential/small business
- Light industrial
- Light commercial
- Branch panel protection
- OEM applications

Features, Benefits and Functions

- Advanced surge path technology for high fault current capacity, low impedance, high frequency design
- Rugged NEMA® 4X (IP65) enclosure
- Large diameter, self-protected metal oxide varistors provide long life and fail-safe operation
- LED monitoring of each phase
- Wide range of voltage applications from 100 to 600 Vac and 48 and 125 Vdc
- 5-year free replacement warranty

Optional Features

- External mounting feet

Standards and Certifications

- UL 1449 3rd Edition for surge protective devices
- CE marked
- Vibration tested IEC 60255-21-1 and -2

Note: CE, CSA and UL on AC unit only.

Catalog Number Selection

CVX050/100

CVX 050 - 240S

Per Phase Peak Surge Current
050 = 50 kA
100 = 100 kA

Configuration and Voltage Ranges
230L = Single-phase—200, 208, 220, 230, 240, 277 Vac
480L = Single-phase—480 Vac
240S = Split-phase—100/200, 110/220, 120/240 Vac
240H = Three-phase high leg delta—120/240 Vac
208Y = Three-phase wye (star)—100/174, 110/190, 120/208, 127/220 Vac
480Y = Three-phase wye (star)—220/380, 230/400, 240/415, 277/480 Vac
600Y = Three-phase wye (star)—305/525, 347/600 Vac
240D = Three-phase delta—200, 208, 220, 230, 240 Vac
480D = Three-phase delta—380, 400, 415, 440, 480 Vac
600D = Three-phase delta—525, 600 Vac (600D available in 50 kA only)
048DC = Direct current—48 Vdc ①
125DC = Direct current—125 Vdc ①

Technical Data and Specifications

CVX050/100 Model Specifications

Description	Specification
Peak kA per phase	50, 100
Peak kA per mode	50
Nominal discharge current	20 kA ①
Short-circuit current rating	100 kA
Single-phase voltages	200, 208, 220, 230, 240, 277, 380, 400, 440, 460, 480 Vac
Split-phase voltages	100/200, 110/220/ 120/240 Vac
High leg delta voltages	240 Vac
Wye system voltages	100/175, 110/190, 120/208, 127/220, 220/380, 230/400, 240/415, 277/480, 305/525, 347/600 Vac
Delta system voltages	200, 208, 220, 230, 240, 380, 400, 415, 440, 480, 525, 600 Vac
Direct current Voltage ②	48 Vdc, 125 Vdc
Input power frequency	47–420 Hz (50/60 Hz typical)
Protection modes	Single-phase: L-N, N-G, L-G Split-phase: L-N, N-G, L-G, L-L High leg delta: L-N, N-G, L-G, L-L, H-N, H-G, H-L Wye: L-N, N-G, L-G, L-L Delta: L-G, L-L Direct current ① (DC): L-L, L-G
Number of ports	1
Specific energy	100 kJ/Ohm
Weight	≈2.0 lbs (1.0 kg)
Operating temperature	–13°F (–25°C) to +140°F (+60°C)
Vibration tested	IEC 60255-21-1 and IEC 60255-21-2

Notes

① 480L, 600D and 600Y units rated 10 kA I_n.

② DC models only available in 50 kA.

2

CVX050/100 Voltage Ratings

Model	System Configuration	Nominal System Voltage	MCOV L-L	MCOV L-N	MCOV L-G	MCOV N-G	UL 1449-3 VPR ① L-L	UL 1449-3 VPR ① L-N	UL 1449-3 VPR ① L-G	UL 1449-3 VPR ① N-G
CVX050										
230L	Single-phase two-wire + ground	200, 208, 220, 230, 240, 277	—	320	640	320	—	1200	1200	1200
480L	Single-phase two-wire + ground	380, 400, 440, 460, 480	—	550	1100	550	—	1800	4000	1800
240S	Split-phase three-wire + ground	100/200, 110/220, 120/240	300	150	300	150	1200	700	1200	800
208Y	Three-phase wye (star) four-wire + ground	100/175, 110/190, 120/208, 127/220	300	150	300	150	1200	700	1200	800
480Y	Three-phase wye (star) four-wire + ground	220/380, 230/400, 240/415, 277/480	640	320	640	320	2500	1200	2000	1200
600Y	Three-phase wye (star) four-wire + ground	305/525, 347/600	840	420	840	420	2500	1500	2500	1500
240D	Three-phase delta three-wire + ground	200, 208, 220, 230, 240	640	—	320	—	2000	—	1200	—
240H	Three-phase high leg delta	240	300	150	150	640	1500	700	1200	700
480D	Three-phase delta three-wire + ground	380, 400, 415, 440, 480	1100	—	550	—	3000	—	1800	—
600D	Three-phase delta three-wire + ground	525, 600	1100	—	700	—	3000	—	2500	—
048DC	Direct current	48 Vdc ②	130	—	65	—	—	—	—	—
125DC	Direct current	125 Vdc ②	288	—	144	—	—	—	—	—
CVX100										
230L	Single-phase two-wire + ground	200, 208, 220, 230, 240, 277	—	320	320	320	—	1200	1200	1200
480L	Single-phase two-wire + ground	380, 400, 440, 460, 480	—	550	550	550	—	1800	1800	1800
240S	Split-phase three-wire + ground	100/200, 110/220, 120/240	300	150	150	150	1200	700	800	700
208Y	Three-phase wye (star) four-wire + ground	100/175, 110/190, 120/208, 127/220	300	150	150	150	1000	600	700	700
480Y	Three-phase wye (star) four-wire + ground	220/380, 230/400, 240/415, 277/480	640	320	320	320	1800	1200	1200	1200
600Y	Three-phase wye (star) four-wire + ground	305/525, 347/600	840	420	420	420	2500	1500	1500	1500
240D	Three-phase delta three-wire + ground	200, 208, 220, 230, 240	640	—	320	—	1800	—	1200	—
240H	Three-phase high leg delta	240	300	150	150	150	1200	700	700	700
480D	Three-phase delta three-wire + ground	380, 400, 415, 440, 480	1100	—	550	—	3000	—	1800	—

Dimensions

Approximate Dimensions in Inches (mm)

CVX050/100 Standard Dimensions

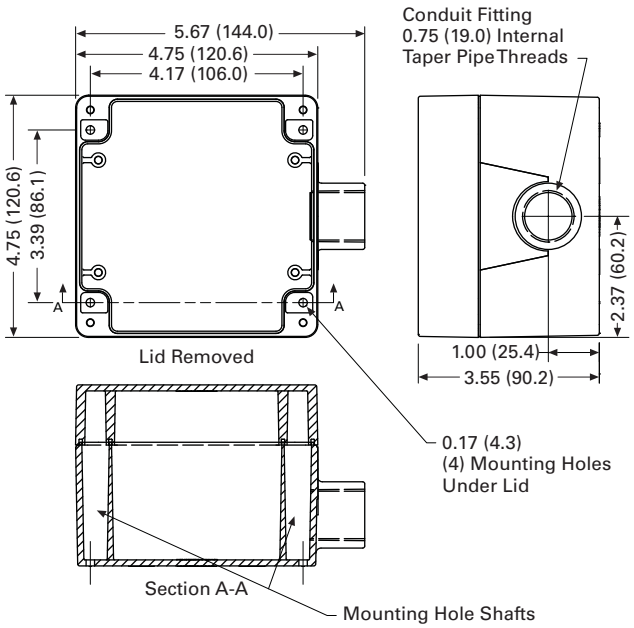

Dimensions are in Inches (mm)

Notes

① UL 1449 3rd Edition VPR (voltage protection rating) test environment: All tests performed with 6-inch lead length, positive polarity.

② DC units available in 50 kA only. Voltages shown are the maximum suggested operating voltages and are not UL certified.

SAND COULEE WTP

MILBANK U4015O

Single Position Sockets

200 Amp | 4 Terminal | Ring Type

U7017-RL-TG

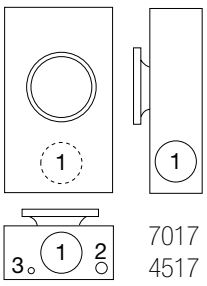

7017
4517

U7018-XL-TG

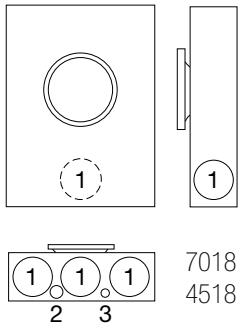

7018
4518

U4015-O

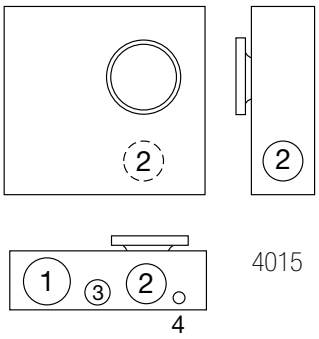

4015

200 Amp — 4 Terminal — Single Position — Ring Type

Catalog Number	Service	Hub	Connectors CU/AL		Dimensions			Knockouts			
			Line	Load	D"	W"	H"	1	2	3	4
U7017-RL-TG	OH	H.O.	#6-350	#6-350	4⅛	8	15½	2½	¼,½	¼	—
U7018-XL-TG	OH/UG	C.P.	#6-350	#6-350	4⅛	11	15½	2½	¼,½	¼	—
U4517-DL-M4	OH/UG	2"	#6-350	#6-350	4⅛	8	15½	2½	¼,½	¼	—
U4518-O-W	UG	Blank	#6-350	#6-350	4⅛	11	15½	2½	2	¼,½	¼
U4015-O	UG	Blank	#6-350	#6-350	6	14	16¼	3	2½	1½	¼,½

Notes

- **Fifth Terminal:** For field mounted fifth terminal, order catalog number **K5T** to fit into square opening at the 9 o'clock position.
- **Hubs:** For the proper hub selection see the hub suffix chart on the accessories page.
- **Triplex Ground (-TG):** Factory installed.
- **Sealing Rings:** Ring-type units are supplied with **MR-2** snap action sealing rings as standard.

Utility requirements for this equipment may vary.
Always consult the serving utility for their requirements before ordering or installing equipment in this catalog.

SAND COULEE WTP
KILLARK VR20322E6-S39

ALLEN TERMINALS

Plug

Connector

200 Amp 600VAC/250VDC; 50-400hertz
NEMA 3 4, 4X①

Wire Range

Regular Stranding: #1 - 250
Extra flex: #1 - 250
(.653 max conductor diameter)

UL File No. E10757 CSA Certified File No. LR111846
E213215

E

C

Receptacle

FEATURES-SPECIFICATIONS

200 AMP PLUGS & CONNECTORS				
GROUND STYLE	CIRCUIT	GROMMET RANGE	CATALOG NUMBER	
			PLUG	CONNECTOR
Style I	3W3P	1.0 - 2.5 IN	VP203512	VPR203112
	4W4P	1.0 - 2.5 IN	VP204513	VPR204113
Style II	2W3P	1.0 - 2.5 IN	VP203612	VPR203212
	3W4P	1.0 - 2.5 IN	VP204612	VPR204212

MODIFICATIONS*	
CATALOG NUMBER	DESCRIPTION
S39⑤	Reverse service for receptacles, plugs & connectors
S37	Polarization for receptacles, plugs & connectors

See page PR5 for more information on these options.

200 AMP RECEPTACLES & BACK BOXES				
GROUND STYLE	CIRCUIT	CATALOG NUMBER		
		E② TYPE	C② TYPE	RECEPTACLE ONLY
Style I	3W3P	VR20312E**6**	VR20312C**7**	VR20312
	4W4P	VR20412E**6**	VR20412C**7**	VR20412
Style II	2W3P	VR20322E**6**	VR20322C**7**	VR20322
	3W4P	VR20422E**6**	VR20422C**7**	VR20422
Splice box only w/adapter②③		VJ**68**	VJC**78**	Angle adapter only **VJA200**

② *200 Amp Back Boxes are available in dead-end sizes 1-1/2", 2" & 2-1/2" conduit sizes. Dead-end box shown is 2". For other available dead-end box sizes, change the BOLD "**6**" in either the dead-end assembly or box only number as follows: **5**=1-1/2", **6**=2", **7**=2-1/2". Feed through boxes are available in 2-1/2"; use "R" series adapters as required for smaller sizes (sold separately). Assembly catalog numbers are listed for ease of ordering or specification and devices are shipped as components.*

③ *Adapter only can be used to attach receptacle at an angle to a standard sheet metal box.*

NOTE: 200A VersaMate receptacle lids secure with wingnuts for N4X environments when not in use. VersaMate plugs secure with wingnuts and/or lock-ring collar. This exclusive dual method allows retention of competitive plugs that use either wingnuts or a lock-ring collar.

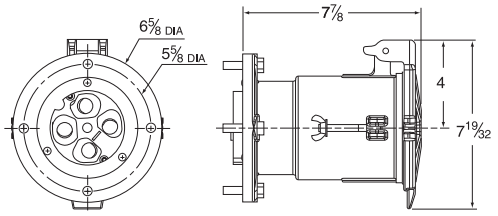

Receptacle

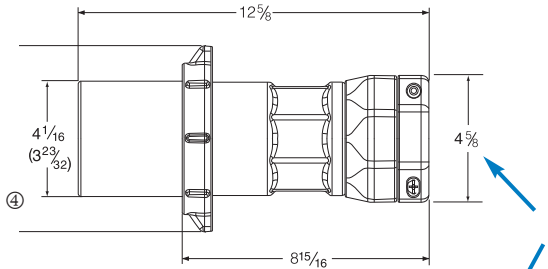

Plug

VersaRange® clamps provide a firm fit for one plug (or connector) over a wide range of cable diameters (competitors often need two – requiring additional sizing decisions).

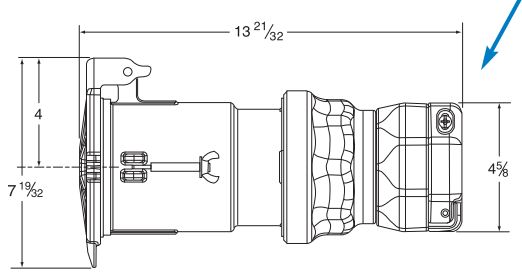

Connector

Back Box Dimensions

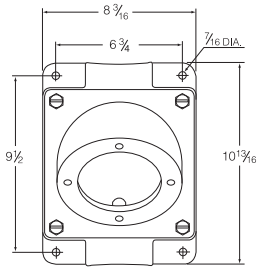

VJC

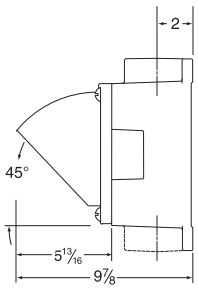

① *Components are intermateable & UL classified with Appleton® Powertite® or Crouse-Hinds® Arktite® devices (when installed in accordance with instructions furnished with device. Assemblies containing components from other manufacturers would have the NEMA type rating of the lowest rated device.*

④ *Dimensions in ( ) are 3 pole devices; balance are 4 pole.*

⑤ *200A 3W4P Reverse Service configured "W" Series and VersaMate® are not intermateable. However, the VersaMate VR20422-S39 receptacle ships with instructions to permanently convert for use with existing PW-6402X SU39 plugs. Factory only configured plugs to fit old RW64C-SU39 receptacles may be ordered as VP-PW64026 SU39.*

HUBBELL KILLARK

LITHONIA LIGHTING®

SAND COULEE WTP
FIXTURE TYPE: DMW
LITHONIA
DMW 3 32 MVOLT 1/3 OS10IS

FEATURES & SPECIFICATIONS

INTENDED USE — Intended for low to medium mounting heights where dust, dirt, humidity or moisture are present. Ideal for canopies, dock areas, wastewater treatment, refrigerated areas, food processing and other non-hazardous environments. Certain airborne contaminants can diminish integrity of acrylic. **Click here for Acrylic Environmental Compatibility table for suitable uses.**

CONSTRUCTION — Housing formed from impact resistant, UV stabilized, fiberglass reinforced polyester with cold-rolled steel enclosed wireway. Poured in place gasketing provides a seal between housing and diffuser. Captive, corrosion-resistant cam-action latches secure the diffuser; six on 4′ units, and ten on 8′ units. Stainless steel latches available.

Finish: Painted parts pretreated with a five-stage iron-phosphate process to ensure superior paint adhesion and corrosion resistance, then finished with a high-gloss, baked white enamel.

OPTICS — High-impact acrylic diffuser with a stippled interior surface to spread lamp image.

PLEASE NOTE: The standard 4′ diffuser is 2-1/4″ deep, and the standard 8′ or 48T8HO diffuser is 3″ deep. To order the 4′ diffuser so that it matches the depth of the 8′ diffuser, order the ARDP option. The 8′ diffuser is not available in the 2-1/4″ depth.

ELECTRICAL — Thermally protected, resetting, Class P, HPF, non-PCB, UL Listed and CSA Certified ballast is standard.

AWM, TFN, THHN wire throughout, rated for required temperatures.

INSTALLATION — For unit or row installations, surface (ceiling or wall) or suspended mounting. Wall mounting; horizontal orientation only for use in damp locations. Stainless steel surface spring-mounting brackets standard (2 included).

LISTINGS — 120V, 277V and MVOLT are UL Listed and CSA Certified (standard). 347V is CSA Certified (see Options). NOM Certified (see Options). Listed for 25°C ambient and wet locations for covered-ceiling applications. IP65 rated. Optional IP67 rating available (supplied with 8 latches on 4' units and 14 latches for 8' units; covered ceiling not required). Compliance to FDA/USDA requirements and/or NSF splash-zone certification.

WARRANTY — 1-year limited warranty. Complete warranty terms located at www.acuitybrands.com/CustomerResources/Terms_and_conditions.aspx

Actual performance may differ as a result of end-user environment and application.

Note: Specifications subject to change without notice.

Enclosed and Gasketed Industrial

DMW

INSTANT, PROGRAMMED OR RAPID START

4' or 8' length
1, 2 or 3 lamps

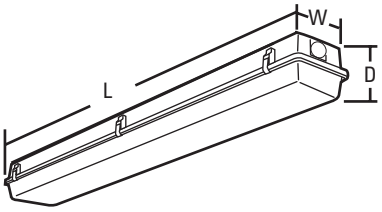

Specifications

Length:	50 (127.0)
	98 (248.9)
Width:	8-1/8 (20.6)
Fixture depth:	5-5/8 (14.3) (deep lens)
	4-3/4 (12.1) (standard lens)

All dimensions are shown in inches (centimeters) unless otherwise noted.

ORDERING INFORMATION

Lead times will vary depending on options selected. Consult with your sales representative.

Example: DMW 2 32 MVOLT GEB10IS

DMW	3	32		MVOLT	1/3 OS10IS		
Series	**Number of lamps**	**Lamp type**	**Diffuser**	**Voltage**	**Ballast**		**Options**
DMW	1	28T5 28W T5 (48")[3]	(blank) 2-1/4" Deep high-impact acrylic (50% DR)	120	GEB10IS	Electronic ballast, ≤10% THD, instant start	ELDW Emergency battery pack (nominal 300 lumens) [7,8]
Wet location	2	32 32W T8 (48")		277	GEB10RS	Electronic ballast, ≤10% THD,rapid start [6]	EL5DW Emergency battery pack (nominal 500 lumens) [7,8]
For tandem double-length unit, add prefix T. Example: TDMW [1]	3[2]	48T8HO 44W T8HO (48")	ARDP 3" Deep high-impact acrylic (50% DR)[5]	MVOLT	GEB10PS	Electronic ballasts, ≤10% THD, programmed rapid start	EL6DW Emergency battery pack (nominal 600 lumens) [7,8]
		54T5HO 54W T5HO (48")[4]		others available	GEB10PS90	T5HO 90° case temperature ballast	EL14DW Emergency battery pack (nominal 1400 lumens) [7,8]
		96T8 59W T8 slimline (96")					GLR Internal fast-blow fusing [9]
		96T8HO 86W T8 380mA (96")					GMF Internal slow-blow fusing [9]
							RIF1 Radio interference filter, one per fixture
							STSL Stainless steel latches
							WLF Wet location fittings (one pair; installed, top, for use with 1/2" rigid conduit)
							IP67 IP67 rated; requires 8 latches for 4' fixtures and 14 latches for 8' fixtures
							CSA CSA certified (only required for 347V)
							NOM NOM certified
							CS89 6' white cord, 16/3, no plug, wet location
							CS88 6' Brad Harrison 16/3 cord and straight blade plug set wet location [9]
							MSI_ Wet location occupancy sensor pre-wired [9,10]
							DL Damp location [11]

1/3 OS10IS = ONE 3-LAMP OSRAM ELECTRONIC BALLAST, <=10% THD, INSTANT START, -20F START

Accessories: *Order as separate catalog number.*

BCD	Bracket for hanger chain mounting. Two per package [12]
HC36	Chain hangers (1 pair, 36" long); Requires BCD
WLF	Wet location fittings (1 pair, not installed, for use with 1/2" rigid conduit)
DMW/VRISMB	Surface mounting brackets (pair) [13]

Notes

1. Not available with 96T8 or 96T8HO.
2. 32W T8 and 28 T5 lamps only.
3. Must specify GEB10PS ballast.
4. Must specify GEB10PS90 ballast.
5. ARDP standard on 48T8HO and 8' fixtures.
6. Available 347V T8 only.
7. Must specify voltage; 120 or 277V only.
8. Check battery pack spec sheet on www.powersentrysafety.com for compatibility.
9. Must specify voltage. Not available with MVOLT.
10. For mounting up to 8' specify MS18; for mounting up to 20' specify MS120.
11. DL option required for battery packs, sensors, and cord sets that are not wet location listed.
12. For stainless steel, specify STS (ex: BCD STS).
13. Brackets ship standard with fixture. For replacement purposes only.

SAND COULEE WTP
FIXTURE TYPE: DMW
LITHONIA
DMW 3 32 MVOLT 1/3 OS10IS

MOUNTING DATA

For unit or row installation, surface (ceiling or wall) or suspended mounting.

DMW — Drill holes through housing and channel at appropriate locations. Includes gasketed wet location fittings on ends for power feeding/mounting. Fitting is threaded for 1/2" rigid conduit (optional WLF for top mounting). Attach to surface using fasteners and sealing washers (by others) appropriate for ceiling materials.

Unit installation — Minimum of two hangers required.

Row installation — Minimum of two hangers required. Recommended 1/2" nipple with union (by others) for DMW.

MOUNTING ACCESSORIES

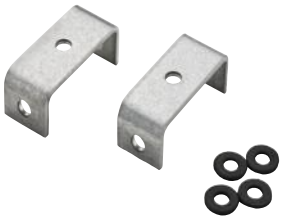

BCD

HC36

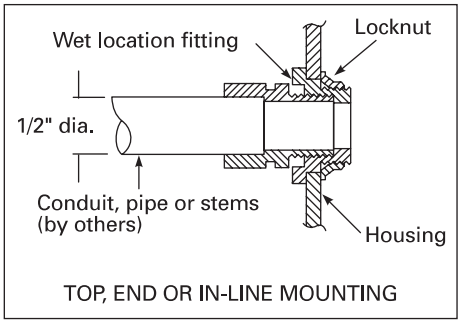

DIMENSIONS

Inches (centimeters). Subject to change without notice.

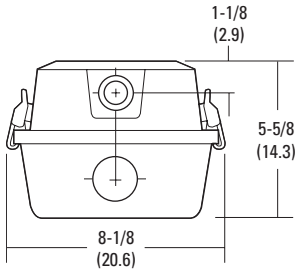

A = 11/16 (17) Dia.

B = 1-1/8 (29) Dia.

Recommended mounting locations
(field drilling required)

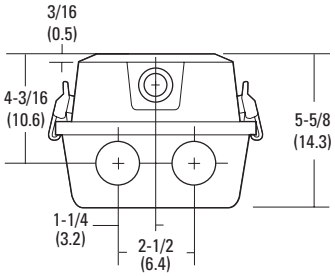

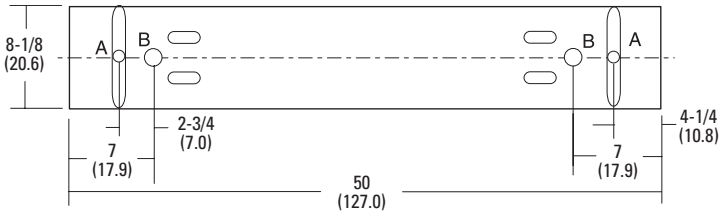

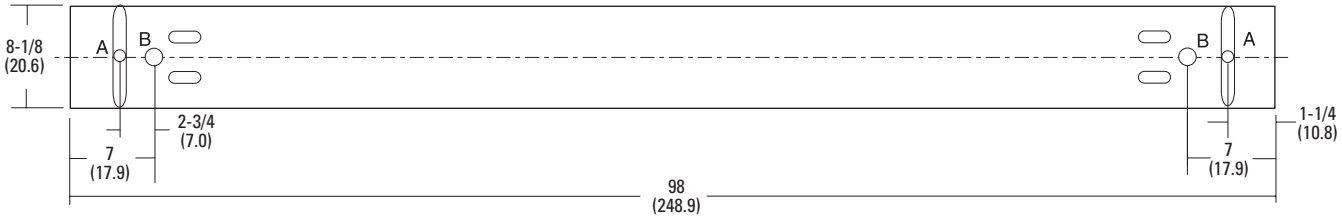

PHOTOMETRICS

See www.lithonia.com.

© 2011-2013 Acuity Brands Lighting, Inc All rights reserved. Rev. 08/15/13

LITHONIA LIGHTING®

SAND COULEE WTP
FIXTURE TYPE: TWP
LITHONIA
TWP 70S 120 LPI

FEATURES & SPECIFICATIONS

INTENDED USE — For entrances, loading docks, walkways and vehicle ramps.

CONSTRUCTION — Rear housing: Rugged, corrosion-resistant, die-cast aluminum. Corrosion-resistant external hardware includes slotted hex-head and tamperproof fasteners.

Front housing and refractor: one-piece, injection-molded, UV-stabilized polycarbonate.

Finish: Dark bronze (DDB) corrosion-resistant polyester powder.

OPTICS — Reflector is finished in white thermoset polyester powder, electrostatically applied. Standard finish on opaque portion of front cover and back housing is dark bronze polyester enamel. Refractor is sealed and gasketed to inhibit the entrance of outside contaminants.

ELECTRICAL — Ballast: Low and high pressure sodium are high reactance, high power factor. Metal halide 50-150W are high reactance, high power factor and are standard with pulse-start ignitor technology. "SCWA" not required. Constant wattage autotransformer for 175M (CSA, NOM or INTL required for probe start shipments outside of the US). Super CWA (pulse start ballast), 88% efficient and EISA legislation compliant, is required for 175M (SCWA option) for US shipments only. Ballast is 100% factory-tested.

Socket: Porcelain, horizontally oriented, single-ended bayonet base socket for 35W low pressure sodium; medium base socket for 70-150W; and mogul base socket for 175W with copper alloy, nickel-plated screw shell and center contact. UL listed 1500W, 600V.

INSTALLATION — Top 3/4" threaded wiring access. Back access through removable 3/4" knockout. Feed-thru wiring can be achieved by using a condulet tee. Mount on any flat, vertical surface.

LISTINGS — Listed and labeled to UL standards. Listed and labeled to CSA standards (see Options). NOM Certified (see Options). UL listed for 25°C ambient and wet locations. IP64 rated.

Note: Not recommended for use in car wash interior applications.

Specifications subject to change without notice.

Wall Packs

TWP

METAL HALIDE 70W-175W
HIGH PRESSURE SODIUM 35W-150W
LOW PRESSURE SODIUM 35W
8' to 15' Mounting

Specifications

Height: 15-1/2 (39.4)
Width: 16-1/8 (41.0)
Depth: 7-3/4 (19.7)
*Weight: 17.9 lbs. (8.12 kg)

All dimensions are inches (centimeters) unless otherwise indicated.

* Weight as configured in example below.

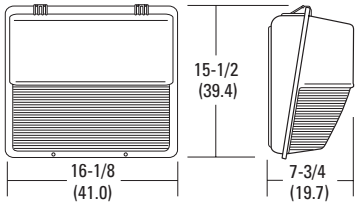

ORDERING INFORMATION For shortest lead times, configure product using **standard options (shown in bold).** **Example**: TWP 100M 120 LPI

TWP	70S	MVOLT	1/3 OS10IS			LPI
Series	**Wattage**	**Voltage**	**Ballast**	**Options**	**Finish**	**Lamp[13]**
TWP	Metal halide	**120**	(blank) **Magnetic ballast**	Shipped installed in fixture	(blank) **Dark bronze**	**LPI Lamp included**
	70M[1,2]	208[6]		SF Single fuse (120, 277, 347V)	**DBL Black**	**L/LP Less lamp**
	100M[1]	240[6]	CWI Constant wattage isolated	DF Double fuse (208, 240, 480V)	DMB Medium bronze	
	150M	**277**	Pulse Start	EC Emergency circuit[9]	**DWH White**	
	175M[2,3]	**347**		QRS Quartz restrike[9]	DNA Natural aluminum	
	Ceramic metal halide	480[8]	**SCWA Super CWA pulse start ballast**	QRSTD Quartz restrike system with time delay[8,9]	DSS Sandstone	
	70MHC[1,2]	**TB[7]**	Note: For shipments to U.S. territories, SCWA must be specified to comply with EISA.	**PE Photoelectric cell, button type[10]**	CR Enhanced corrosion resistant	
	100MHC[1]	23050HZ[8]		**CSA Listed an labeled to comply with Canadian Standards**	CRT Non-stick protective coating[12]	
	150MHC			NOM NOM Certified[8]		
	High pressure sodium[1]			INTL Available for 175M probe start shipping outside the U.S.		
	35S[4]			FS Full shield		
	50S			Shipped separately[11]		
	70S			WG Wire guard		
	100S					
	150S[5]					
	Low pressure sodium[1]					
	35L					

Notes

1 Not available with SCWA.
2 Not available with 480V.
3 These wattages do not comply with California Title 20 regulations.
4 120V only.
5 Operates 55V lamp.
6 Must specify CWI for use in Canada.
7 Optional multi-tap ballast (120, 208, 240, 277V). In Canada 120, 277, 347V; ships as 120/347.
8 Consult factory for available wattages.
9 Maximum allowable wattage lamp included.
10 Not available with 480V or TB.
11 May be ordered as an accessory with prefix TWP. Requires field modification.
12 Black finish (coating applied to housing only).
13 Must be specified. L/LP N/A MHC.

LFX

TWP Metal Halide, High Pressure Sodium, Low Pressure Sodium Wall Packs

SAND COULEE WTP
FIXTURE TYPE: TWP
LITHONIA
TWP 70S 120 LPI

Coefficient of Utilization
Initial Footcandles

TWP 70M Test Report no. 97021601

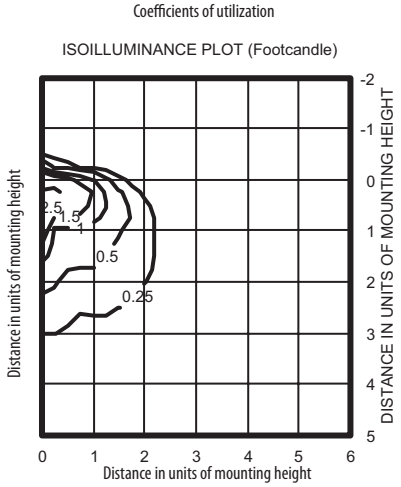

70W, metal halide lamp, horizontal lamp orientation, 10' mounting height, 5,200 rated lumens.
Total fixture efficiency: 50.7%

TWP 70S Test Report no. 94121702

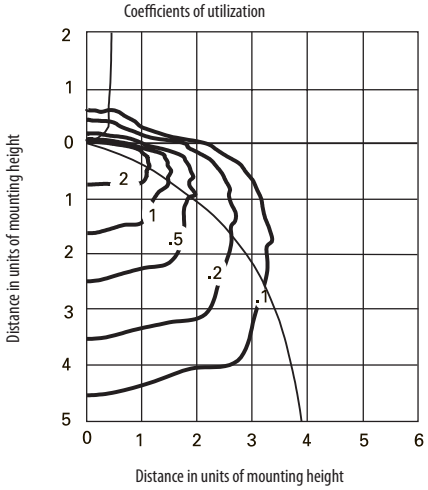

70W, high pressure sodium lamp, horizontal lamp orientation, 12' mounting height, 6,300 rated lumens.
Total fixture efficiency: 55%

TWP 150S Test Report no. 94121503

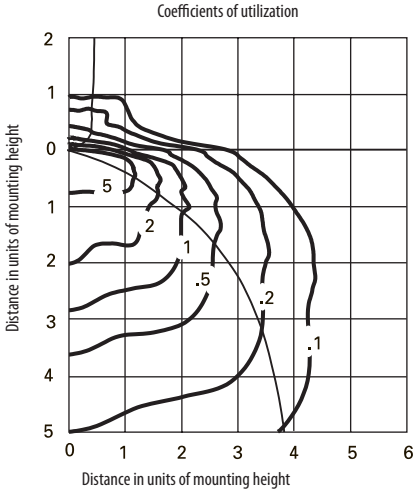

150W, high pressure sodium lamp, horizontal lamp orientation, 12' mounting height, 16,000 rated lumens.
Total fixture efficiency: 53.4%

TWP 35LPS Test Report no. 94121903

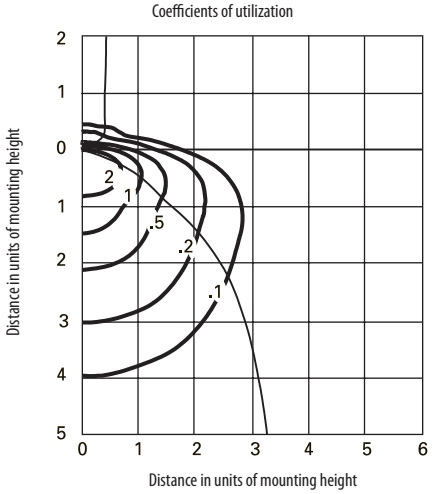

35W, low pressure sodium lamp, horizontal lamp orientation, 12' mounting height, 4,800 rated lumens.
Total fixture efficiency: 48.4%

Mounting Height Correction Factor
(Multiply the fc level by the correction factor)

10'	12'
————	10 ft. =1.44
15 ft. = .44	15 ft. = .64
20 ft. = .25	20 ft. = .36
25 ft. = .16	25 ft. = .23

$$\left(\frac{\text{Existing Mounting Height}}{\text{New Mounting Height}}\right)^2 = \text{Correction Factor}$$

OUTDOOR: One Lithonia Way Conyers, GA 30012 Phone: 770.922.9000 Fax: 770-918-1209 www.lithonia.com

©1989-2013 Acuity Brands Lighting, Inc. All rights reserved. Rev. 11/05/13

STUFF500

SAND COULEE WTP | RAB STUFF500

Control 500 Watts from an unobtrusive box mounted sensor. Vandalproof lens. Full 180° view . Great for stairwells and gyms! Color matched lens.

Color: Bronze

Weight: 1.3 lbs

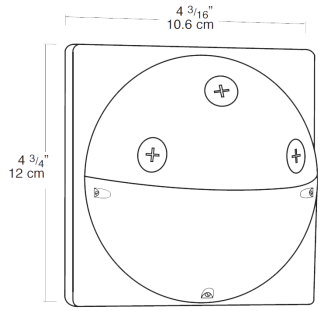

Technical Specifications

UL Listing:
Suitable for wet locations.

Compatibility:
Compatible with most electronic ballasts. Not compatible with instant start ballasts.

Voltage:
120 volts AC 60 Hz.

Time Adjustment:
5 seconds to 15 minutes.

Quick Test Time:
5 second test time for fast installation. Works day or night.

"No Hands" Auto Testing:
Auto mode starts after 4 minutes of testing. No adjustment needed.

Photoelectric Control:
Deactivates lights during daylight. Fully adjustable for 24 hour operation or custom applications.

Manual Override:
Double flip wall switch logic prevents activation by brief power outages. Resets after 8 hours. No extra wiring needed.

Surge Protection:
Withstands up to 3000 volts.

LED Detection Indicator:
LED glows red day & night for "on guard" deterrence.

RF Immunity:
Circuits fully shielded for maximum radio frequency immunity.

Incandescent Watts Switched:
500 watts @ 120 volts.

Fluorescent Watts Switched:
250 watts @ 120 volts.

Ratings:
5 amps.

Power Consumption:
Negligible

Time Delay:
5 seconds to 15 minutes.

Manual Switch:
None.

Ambient Light Sensing:
Adjustable.

Adjustments:
Time, ambient light & sensitivity.

Detection:
Full 180° view.

Switching Capacity:
Relay On/Off Model Switches 240 watts when lights are mounted to sensor. 500 watts Incandescent or 240 watts Fluorescent of remotely mounted lighting @ 120 volts.

Patents:
RAB sensor and fixture designs are protected under U.S. and International Intellectual Property laws.

Warranty:
5 year sensor warranty.

Copyright ©2014 RAB Lighting Inc. All Rights Reserved

model# ***K101 & K102***

K101 & K102 Thermostats

For Line Voltage Electric Heaters

FEATURES:

- Clean , beveled style suits any décor
- Sits flush against wall.
- Includes °C and °F control dials.
- Bi-metal sensing element.
- Operates 41° - 90° F.
- Mounts directly to a 2X4 inch vertical electrical outlet box.
- Fully vented cover allows air sensing in all directions.
- Large knob allows easy adjustment to all temperatures.
- Single or Double Pole (positive off) available.

The K101 & K102 Series thermostats have a larger, more sensitive, bi-metal sensor that improves temperature accuracy to +3° F. This feature achieves a better comfort level with a reduced temperature swing as compared to economy models. Modern appearance with large knob for easy adjustments.

MODEL	UPC# 093319 PART #	DESCRIPTION
20576	K101	Single Pole - WHITE
20626	K101-R	Single Pole - WHITE, RETAIL
20525	K101A	Single Pole - ALMOND
20623	K102	Double Pole - WHITE
20627	K102-R	Double Pole - WHITE, RETAIL
20624	K102A	Double Pole - ALMOND

SPECIFICATIONS:

Temperature Range: 41° F—90° F (5° C—32° C)

Accuracy: +3° F

Max Power: 2640W @ 120VAC (22A)

Max Power: 4576W @ 208VAC (22A)

Max Power: 5280W @ 240VAC (22A)

Max Power: 4986W @ 277VAC (22A)

Sensing Element: Bimetal

Certification:

Installation Options:

Single Pole wiring
K101

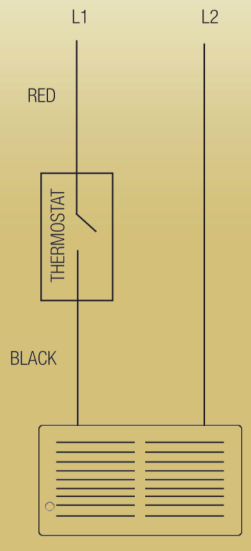

Double Pole wiring
K102

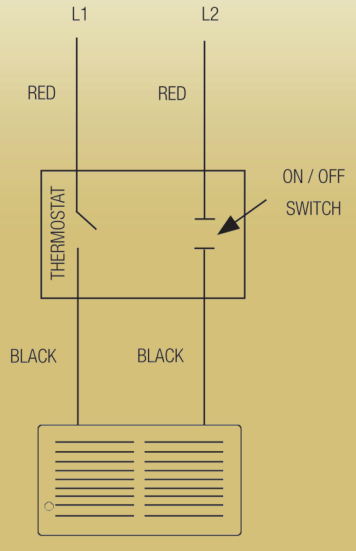

SAND COULEE WTP

KING PK24051B1

www.king-electric.com

unit heater

KB SERIES

LARGE AREA / 2000 - 66,000 WATTS / CEILINGS UNDER 12 FT

E41422 LR43323-2

All New Design!

FEATURES:

- Spiral Steel Fin Element
- Cast Iron Motor
- Aluminum Fan Blade

- Heavy gauge Steel enclosure
- Adjustable discharge louvers
- Totally enclosed motor
- Control options
- Auto-reset thermal cutout
- Tested under UL1278

OPTIONS:

- 1-Pole or 2-Pole thermostat
- Two stage thermostat (single phase only)
- Summer fan switch
- 3-Position switch (Heat-Off-Fan)
- Pilot light (power On indication)
- Door interlocking disconnect
- Wall mounted thermostat
- Stainless Steel (refer to index)

Convenient, small and powerful are great words that describe our unit heaters. They have been standard equipment in highrise buildings, garages, water treatment and fire room vaults to prevent freezing. Other applications are residential garages and warehouse heating. High-mass steel elements and high CFM keep outlet temperatures low for long life.

Under 6kW use the KBP Series for higher outlet temperatures where needed. Long life comes standard with the highest quality components custom designed for use in the KB Series unit heater.

Freeze/moisture protection in a generator vault

ENGINEERING SPECIFICATIONS:

Contractor shall supply and install KB Series unit heaters manufactured by King Electrical Mfg. Company. Heaters shall be of the wattage and voltage as indicated on the plans.

Construction: All exterior and interior metal enclosure parts are made from 20 gauge electrogalvanized Steel with a rust inhibiting baked enamel finish. Smooth rounded corners and protective edge trim give an attractive modern appearance.

Adjustable Outlet Louver: Louvers direct air up or down as needed for the heating application.

Rear Intake Screen: Heavy gauge steel screen protects against foreign objects making accidental contact with the rotating fan blade.

Spiral Fin Elements: The metal sheath element is brazed with spiral fins then molded in to a coil configuration. This combination produces the best heat transfer while eliminating the potential for hot spots by positioning the element in the maximum airflow stream.

Totally Enclosed Fan Motor: Permanently lubricated cast iron with 20cc of oil. Epoxy-coated motor with enclosed rotor resists moisture and corrosion for long-lasting, trouble-free operation.

Aluminum Fan Blade: Axial flow-type fan mounted directly to the motor shaft for maximum efficiency.

Auto-Reset Thermal Cutout: Power is disconnected from the element if an overheated condition occurs. The fan continues to run to dissipate excess heat from the element. The element is re-energized automatically when the normal operating temperature returns.

Internal Controls: Magnetic contactors are standard on all 480V heaters, all 208V/1-Phase, 240V/1-Phase, 277V/1-Phase heaters above 6kW, and all 3-Phase heaters. The control voltage is equal to the line voltage (208, 240 or 277) except for 480V models where a transformer is provided for 24V control. Over 5kW the line voltage control is operating the contactor coil only and will draw only 1 Amp. See page 64 for control voltages.

Fusing: Internal circuit fusing is provided when the heater ampacity exceeds 48 Amps to comply with N.E.C. standards. A fan delay is provided standard on models 12.5-kW and above to dissipate residual heat from the heating elements.

Easy Installation: A quick access panel located on the bottom of the heater allows for quick wiring and easy maintenance for the life of the heater.

Approvals: UL (E41422), cCSAus (LR43323-2)

FACTORY INSTALLED OPTIONS:

Power Contactor: Standard on heaters above 5kW and on all 3-Phase models; optional on 2 to 5kW 1-Phase heaters.

24 Volt Control: Standard on 480V heaters; optional on all other heaters.

Mounting: Available universal or low profile ceiling bracket made from heavy gauge Steel.

Rough Service: 5 lugs are provided to securely mount heater in heavy industrial applications or marine vessels where vibration and movement are a concern. Includes 5-hole bracket.

Other Control Options:

- 1-Pole or 2-Pole thermostat temperature indicated label with 44°F energy code setting
- Built-in two-stage thermostat on single phase heaters
- Summer fan switch
- 3-position switch (Heat-Off-Fan)
- Pilot light (power On indication)
- Door interlocking disconnect
- Wall-mounted thermostat line or low voltage

NOTE: Multiple heaters can be controlled by a single thermostat if phasing is coordinated in the control wiring.

MODEL CODE:

KB4810-1-T-B2-DS40

KB	Series
480	Volts
10	Kilowatts
1	Single Phase
T	SP Stat
B2	Bracket
DS40	3-Pole Disconnect Switch

QUICK SELECTION CHART:

KILOWATTS	PHASE	208V		240V		277V		480V	
		MODEL	UPC #093319 PART #	MODEL	UPC #093319 PART #	MODEL	UPC #093319 PART #	MODEL	UPC #093319 PART #
4	1	KB2004-1	15012	KB2404-1	15010	KB2704-1	15204	KB4804-1	15015
5	1	KB2005-1	15224	KB2405-1	15018	KB2705-1	15206	KB4805-1	15021
	3	KB2005-3MP	15228	KB2405-3MP	15075			KB4805-3MP	15105
6	1			KB2406-1	15024	KB2706-1	15208	KB4806-1	15027
	3			KB2406-3MP	15078			KB4806-3MP	15108
7.5	1	KB2007-1	15029	KB2407-1	15030	KB2707-1	15209	KB4807-1	15033
	3	KB2007-3MP	15233	KB2407-3MP	15079			KB4807-3MP	15109
9	1					KB2709-1	15212		
	3			KB2409-3MP	15081			KB4809-3MP	15111
10	1	KB2010-1	15226	KB2410-1	15042	KB2710-1	15214	KB4810-1	15045
	3	KB2010-3MP	15230	KB2410-3MP	15082			KB4810-3MP	15113
12.5	1	KB2012-1	15227	KB2412-1	15054	KB2712-1	15216	KB4812-1	15057
	3	KB2012-3MP	15235	KB2412-3MP	15087			KB4812-3MP	15117
15	1	KB2015-1	15229	KB2415-1	15064	KB2715-1	15221	KB4815-1	15065
	3	KB2015-3MP	15232	KB2415-3MP	15090			KB4815-3MP	15120
18	3			KB2418-3	15093			KB4818-3MP	15123
20	3	KB2020-3	15237	KB2420-3	15094			KB4820-3MP	15122
25	3	KB2025-3	15239	KB2425-3	15100			KB4825-3	15130
30	3	KB2030-3	15223	KB2430-3	15101			KB4830-3	15162
33	3			KB2433-3	15138			KB4833-3	15165
40	3	KB2040-3	15225	KB2440-3	15103			KB4840-3	15169
50	3	KB2050-3	15241	KB2450-3	15148			KB4850-3	15175
60	3	KB2060-3	15243	KB2460-3	15153			KB4860-3	15180

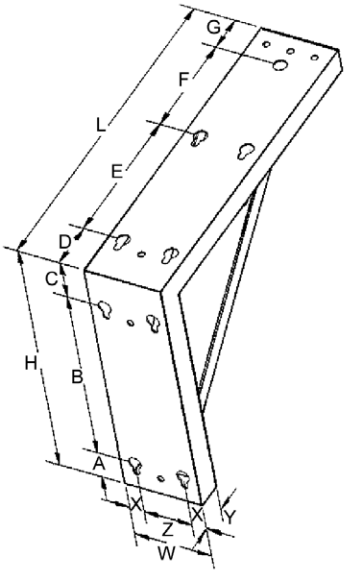

KBB-1 & KBB-2 - Unit heater brackets can be used for mounting on ceiling or wall. 3/8" threaded hole on top of unit heater can also be used with threaded rod to drop unit closer to floor.

BRACKET SELECTION CHART:

BRACKET #	HEATER KW SIZE USED WITH	BRACKET DIMENSIONS												
		L	W	H	A	B	C	D	E	F	G	X	Y	Z
KBB-1	3 to 7.5 kW (1 phase)	12½"	3"	10"	1¼"	7¼"	1½"	1¾"	5½"	4"	1¼"	½"	1"	2"
KBB-2	10 to 15 kW (1 phase) 3 to 30 kW (3 phase)	17"	3"	10"	1¼"	7¼"	1½"	2"	8½"	5¼"	1¼"	½"	1"	2"

FIELD MOUNT ACCESSORIES:

MODEL	UPC #093319 PART #	DESCRIPTION	WT. (lbs.)
KBB-1	15192	Universal Wall/Ceiling Small Mounting Bracket (for heaters with size A and C)*	3
KBB-2	15195	Universal Wall/Ceiling Large Mounting Bracket (for heaters with size B, D and E) (Use 2 brackets for size F&G)	4
KBB-4	15351	Rough Service or Low Profile Mounting Bracket for any heater (2 each required for size F and G)*	4
KBT	15189	Capillary Bulb-Style Thermostat Kit (single pole single throw) 25 Amp	.5
KBT-2	18209	Capillary Bulb-Style Thermostat Kit (double pole single throw) 25 Amp	.5

* see BRACKET SELECTION CHART

Rough Service / Low Profile • KBB-4 Mounting Bracket

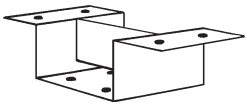

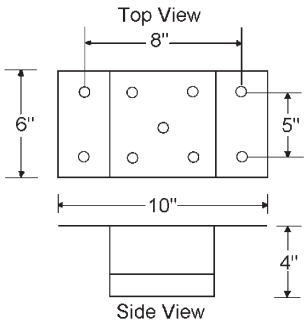

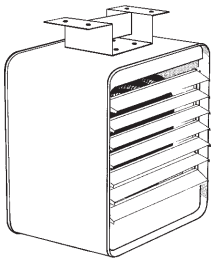

This bracket is manufactured in a Low Profile design with 5 mounting holes. *When using this bracket for Low Ceiling Profile installation use center hole only.*

Option **(-5MT)** is for *rough service support.* Request this option at the time of order placement. The heater will have four mounting holes fabricated into top.

Attach bracket using the four outside mounting holes to provide a rigid mount. The price of option **(-5MT)** *includes the KBB-4 bracket.* This is ideal for use on ships, containers or any application where the heater will experience vibration.

A unit heater being installed in a Chicago high rise electrical room for humidity and freeze protection

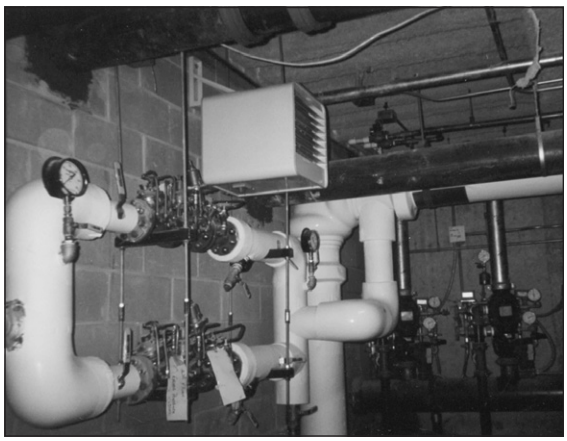

Water pumping and treatment room, protected from freezing and humidity with King KB unit heater

KBT - Capillary bulb-style thermostat senses intake air for accurate temperature control. Label calibrated from 40° - 75°F with a 44°F setting for unoccupied space as some energy codes require. 25 Amp rating.

Disconnects can be specified in 30, 40, 60, 80 or 100 Amp ratings with door interlock and padlock provision. Standard non-fused interlocking disconnect.

FACTORY INSTALLED OPTIONS:

ADD SUFFIX:	DESCRIPTION
-T	1-Pole Unit Mounted Thermostat (temperature range 40°F - 100°F)
-T2	2-Pole Unit Mounted Thermostat (temperature range 40°F - 100°F) 6kW and higher
-TP	Tamperproof Thermostat with Slotted Shaft
-B1	Mounting Bracket KBB-1 (included with heater size A and C)
-B2	Mounting Bracket KBB-2 (included with heater size B, D and E)
-SF	Summer Fan Switch
-SFR	Control Relay and 24V Transformer for Remote Summer Fan Operation
-3PS	3-Position Switch (Heat / Fan / Off)
-PL	Pilot Light (power ON indication)
-CX	Power Contactor for 3 kW - 5kW 1-Phase Models (Line Voltage Coil)
-CT24	Transformer that Converts 208, 240 and 277 Volts to 24 Volt Control Circuit {add power contactor (-CX) for 3 kW - 5kW 1-Phase models}
-CT120	Same as (-CT24) except 120 Volt Control Components {add power contactor (-CX) for 3kW - 5kW 1-Phase models}
-DS30	30 Amp, 3-Pole Disconnect Switch w/ Door Interlock and Padlock Provision
-DS40	40 Amp, 3-Pole Disconnect Switch w/ Door Interlock and Padlock Provision
-DS60	60 Amp, 3-Pole Disconnect Switch w/ Door Interlock and Padlock Provision
-DS80	80 Amp, 3-Pole Disconnect Switch w/ Door Interlock and Padlock Provision
-DS100	100 Amp, 3-Pole Disconnect Switch w/ Door Interlock and Padlock Provision
-2S1	2-Stage Control for Single Phase Models
-5MT	5 Mounting Weld Nuts Provided on Heater for Rough Service Use (includes KBB-4 5 hole bracket)
-5MT2	Rough Service Mounting Holes (4 each) fabricated into top of each heater to accept KBB-4 Mounting Brackets (2 each KBB-4 included)

Detail Bill of Material

Project Name: Sand Coulee WTP
General Order No:
Negotiation No: D3840708X4K1
Alternate No: 0000

Item No.	Qty	Product	Description
	1	Safety Switches	Safety Switches

Catalog No DH364URK
Designation

Qty	List of Materials
1	Neutral / Ground Kit : DG200NK (Field Installed)
1	Heavy Duty Switch - Non-Fusible, 3-Pole, 600 VAC, 200 A, NEMA 3R

Item No.	Qty	Product	Description
	1	Safety Switches	Safety Switches

Catalog No DT324URK
Designation MTS

Qty	List of Materials
1	Neutral / Ground Kit : DT200NK (Field Installed)
1	Double Throw Switch - Non-Fusible, 3-Pole, 240 VAC, 200 A, NEMA 3R

Item No.	Qty	Product	Description
	1	SPD	Side Mounted SPDs: CVX Series, 100 kA, 240D, 240V Delta (3W+G), NEMA 4X Enclosure, Basic Package

Catalog No CVX100-240D
Designation TVSS

Qty	List of Materials
1	CVX, 100 kA, 240D, NEMA 4X Enclosure

Eaton Selling Policy 25-000 applies.

All orders must be released for manufacture within 90 days of date of order entry. If approval drawings are required, drawings must be returned approved for release within 60 days of mailing. If drawings are not returned accordingly, and/or if shipment is delayed for any reason, the price of the order will increase by 1.0% per month or fraction there of for the time the shipment is delayed.

Safety Switch General Information

Global Specifications

System Voltage	600 VAC
Switch Type	Single Throw - Heavy Duty
Poles/Blades	3-Pole
Amperage	200
Protection	Non-Fusible with No Neutral
Enclosure Type	NEMA 3R
Switch Lugs	Standard
Fungus Proof Treatment	N
Lock-On Provision	N
Fuse Pullers	N
Control Pole	N
Ground Lugs	N
316 Stainless	N
Stainless Mechanism	N
Mill Duty	N

Nameplate

Field Installed Kits

QUANTITY	DESCRIPTION
1	Neutral / Ground Kit : DG200NK (Field Installed)

Safety Switch Catalog No.

DH364URK

The information on this document is created by Eaton Corporation. It is disclosed in confidence and it is only to be used for the purpose in which it is supplied.

PREPARED BY: KENT BUTTERFIELD	DATE: 8/29/2014	**Eaton**			
APPROVED BY	DATE	JOB NAME: Sand Coulee WTP			
		DESIGNATION			
VERSION: 1.0.0.1		TYPE: Safety Switch General Information	DRAWING TYPE: Customer Appr.		
NEG-ALT Number: D3840708X4K1-0000	REVISION: 0	DWG SIZE: A	G.O.	ITEM	SHEET: 1 of 1

GO/NEG-Air-Date:
D38407708X4K1-0000-8/29/2014

Item Number:

Catalog Number:
DH364URK

Job Name:
Sand Coulee WTP

Designation:

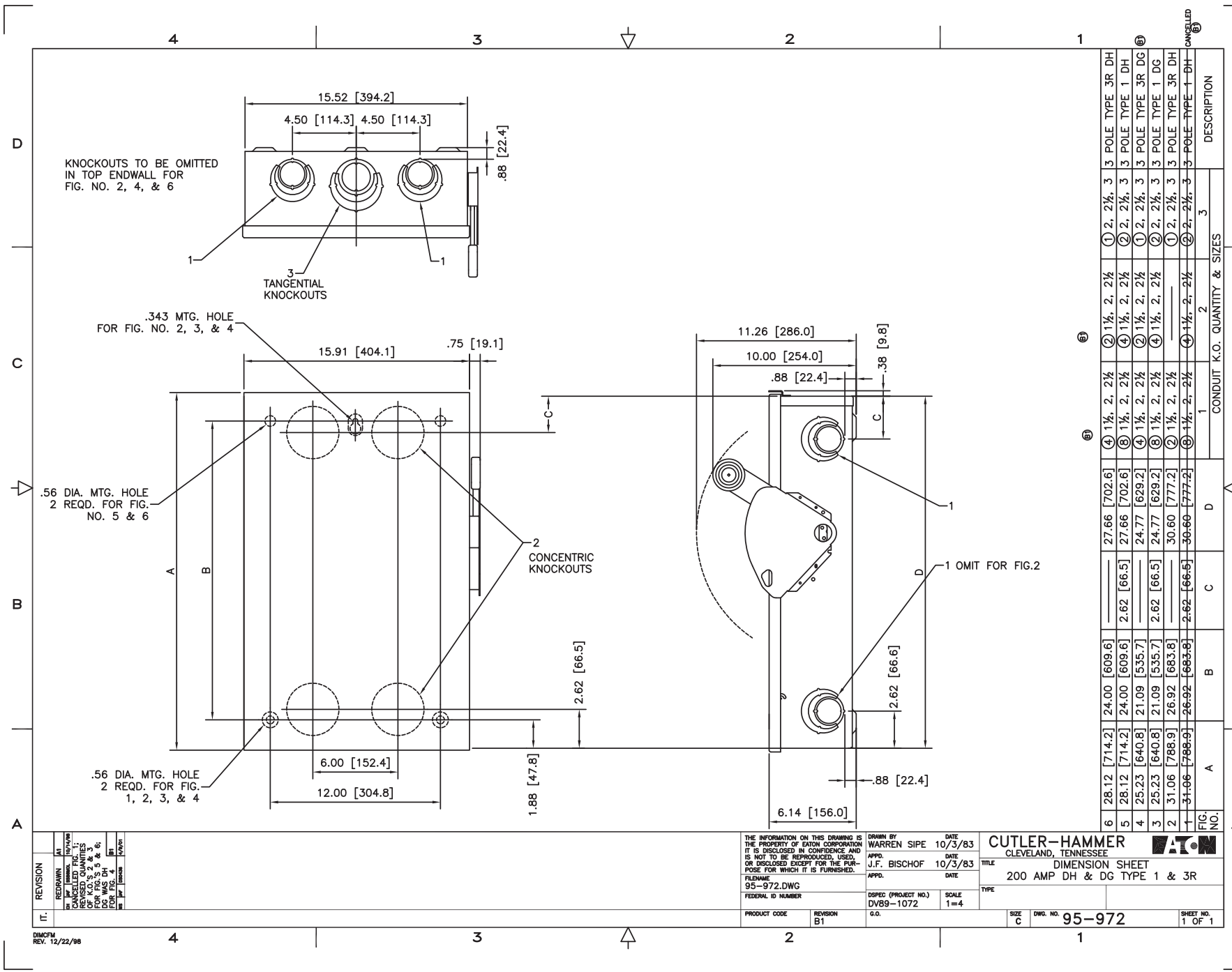

FIG. NO.	A	B	C	D	CONDUIT K.O. QUANTITY & SIZES 1	2	3	DESCRIPTION
6	28.12 [714.2]	24.00 [609.6]	———	27.66 [702.6]	④ 1½, 2, 2½	② 1½, 2, 2½	① 2, 2½, 3	3 POLE TYPE 3R DH
5	28.12 [714.2]	24.00 [609.6]	2.62 [66.5]	27.66 [702.6]	⑧ 1½, 2, 2½	④ 1½, 2, 2½	② 2, 2½, 3	3 POLE TYPE 1 DH
4	25.23 [640.8]	21.09 [535.7]	———	24.77 [629.2]	④ 1½, 2, 2½	② 1½, 2, 2½	① 2, 2½, 3	3 POLE TYPE 3R DG (61)
3	25.23 [640.8]	21.09 [535.7]	2.62 [66.5]	24.77 [629.2]	⑧ 1½, 2, 2½	④ 1½, 2, 2½	② 2, 2½, 3	3 POLE TYPE 1 DG
2	31.06 [788.9]	26.92 [683.8]	———	30.60 [777.2]	② 1½, 2, 2½	———	① 2, 2½, 3	3 POLE TYPE 3R DH
1	31.06 [788.9]	26.92 [683.8]	2.62 [66.5]	30.60 [777.2]	⑧ 1½, 2, 2½	④ 1½, 2, 2½	② 2, 2½, 3	3 POLE TYPE 1 DH (61) CANCELLED

REVISION					IT.
A1	10/14/99	REDRAWN	BF	BM	
B1	10/29/99	CANCELLED FIG. 1; REVISED QUANTITIES OF KO'S IN FIG. 2, 3, 5 & 6; FOR FIG. 5 DG WAS DH FOR FIG. 4	BF	BM	

THE INFORMATION ON THIS DRAWING IS THE PROPERTY OF EATON CORPORATION IT IS DISCLOSED IN CONFIDENCE AND IS NOT TO BE REPRODUCED, USED, OR DISCLOSED EXCEPT FOR THE PURPOSE FOR WHICH IT IS FURNISHED.

FILENAME: 95-972.DWG
FEDERAL ID NUMBER:

DRAWN BY: WARREN SIPE DATE: 10/3/83
APPD.: J.F. BISCHOF DATE: 10/3/83
APPD. DATE:
DSPEC (PROJECT NO.): DV89-1072
SCALE: 1=4

PRODUCT CODE:
REVISION: B1
G.O.:
SIZE: C
DWG. NO.: 95-972
SHEET NO.: 1 OF 1

CUTLER-HAMMER
CLEVELAND, TENNESSEE

TITLE: DIMENSION SHEET
200 AMP DH & DG TYPE 1 & 3R

TYPE:

DIMCFM REV. 12/22/98

Safety Switch General Information

Global Specifications

System Voltage	240 VAC
Switch Type	Double Throw - Heavy Duty
Poles/Blades	3-Pole
Amperage	200
Protection	Non-Fusible with No Neutral
Enclosure Type	NEMA 3R
Switch Lugs	Standard
Fungus Proof Treatment	N
Lock-On Provision	N
Fuse Pullers	N
Control Pole	N
Ground Lugs	N
316 Stainless	N
Stainless Mechanism	N
Mill Duty	N

Nameplate

Field Installed Kits

QUANTITY	DESCRIPTION
1	Neutral / Ground Kit : DT200NK (Field Installed)

Safety Switch Catalog No.

DT324URK

The information on this document is created by Eaton Corporation. It is disclosed in confidence and it is only to be used for the purpose in which it is supplied.	PREPARED BY: KENT BUTTERFIELD	DATE: 8/29/2014	**Eaton**		
	APPROVED BY:	DATE:	JOB NAME: Sand Coulee WTP		
			DESIGNATION: MTS		
	VERSION: 1.0.0.1		TYPE: Safety Switch General Information	DRAWING TYPE: Customer Appr.	
NEG-ALT Number: D3840708X4K1-0000	REVISION: 0	DWG SIZE: A	G.O.	ITEM	SHEET: 1 of 1

Date PDF Generated:9/25/2012 Page 1 of 1

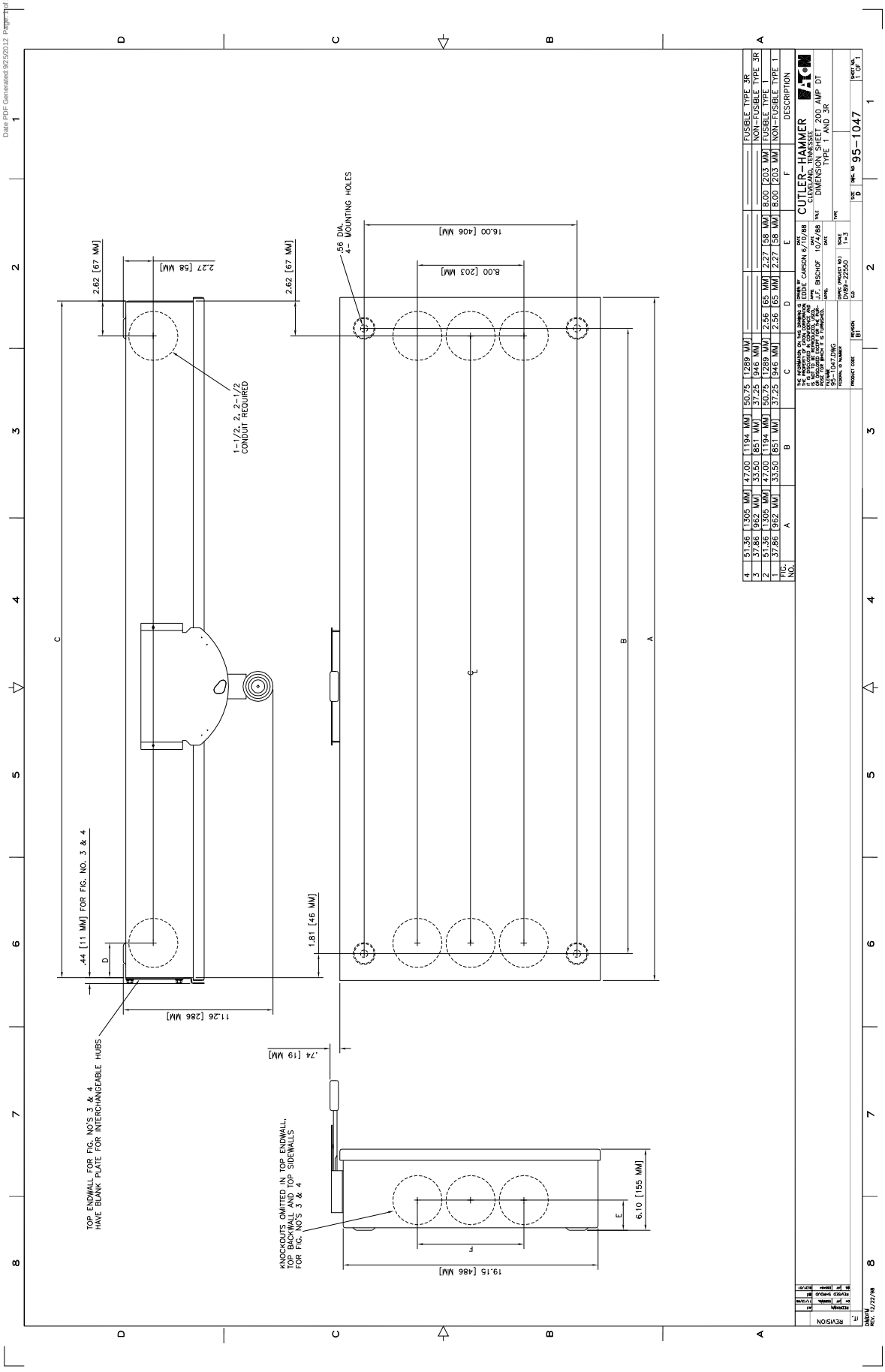

FIG. NO.	A	B	C	D	E	F	DESCRIPTION
4	51.36 [1305 MM]	47.00 [1194 MM]	50.75 [1289 MM]	2.56	65 MM	2.27 58 MM	8.00 [203 MM]	FUSIBLE TYPE 3R
3	37.86 [962 MM]	33.50 [851 MM]	37.25 [946 MM]	2.56	65 MM	2.27 58 MM	8.00 [203 MM]	FUSIBLE TYPE 3R
2	51.36 [1305 MM]	47.00 [1194 MM]	50.75 [1289 MM]	2.56	65 MM	2.27 58 MM	8.00 [203 MM]	FUSIBLE TYPE 1
1	37.86 [962 MM]	33.50 [851 MM]	37.25 [946 MM]	2.56	65 MM	2.27 58 MM	8.00 [203 MM]	NON-FUSIBLE TYPE 1

CUTLER-HAMMER
CLEVELAND, TENNESSEE
DIMENSIONAL SHEET 200 AMP DT TYPE 1 AND 3R

DRWG. NO. 95-1047
SHEET NO. 1 OF 1
SCALE 1=3
DRWG./PROJECT NO. DV89-22550
DRAWN BY EDDIE CARSON 6/10/88
CHKD. BY BISCHOF 10/4/88
APPD. J.F.
PRODUCT CODE
ENGRG. CLD
REVISION BD

THE INFORMATION ON THIS DRAWING IS THE PROPERTY OF EATON CORPORATION & IS NOT TO BE REPRODUCED, COPIED OR USED FOR ANY PURPOSE EXCEPT THAT FOR WHICH IT IS FURNISHED.

REVISION
DWG/PJ REV. 12/22/98

GO/NEG-Alt-Date:	Job Name:
D3840708X4K1-0000-8/29/2014	Sand Coulee WTP
Item Number:	**Catalog Number:** DT324URK
	Designation: MTS

CVX050/100

Contents

Description	*Page*
Introduction	**V3-T2-2**
Product Overview	**V3-T2-5**
SPD Series for Integration into Electrical Distribution Equipment	**V3-T2-7**
SPD Series for Mounting External to Electrical Distribution Equipment	**V3-T2-11**
SPV Surge Protective Device	**V3-T2-16**
CVX050/100	
Catalog Number Selection	**V3-T2-19**
Technical Data and Specifications	**V3-T2-19**
Dimensions	**V3-T2-20**
SP1 Surge Protective Device	**V3-T2-21**
SP2 Surge Protective Device	**V3-T2-23**
AEGIS Powerline Filters	**V3-T2-25**
Sag Ride-Through (SRT)	**V3-T2-30**
Electronic Voltage Regulator (EVR)	**V3-T2-36**

CVX050/100

Product Description

With over two decades of experience in the surge suppression industry and extensive R&D initiatives, Eaton is considered a world leader in surge protective device (SPD) manufacturing. All of Eaton's products are manufactured in an ISO® 9001:2000 and ISO 14001 certified facility.

Eaton's CVX050/100 models are rugged, cost-effective, high-quality SPDs that feature self-protected MOVs that eliminate the failure characteristics of standard metal oxide varistors. This technology results in a fail-safe device that monitors the status of the metal oxide disk and disconnects itself from the power system when the disk is approaching breakdown.

The CVX050/100 is easy to install adjacent or even internal to electrical equipment. When installing an SPD in a retrofit environment, it is important to mount the device as close to the electrical equipment as possible. Keep the wiring (lead length) between the electrical equipment and SPD as short as possible, and twist or wire tie the conductors together to reduce the wire's impedance factor.

Application Description

Eaton's CVX050 and CVX100 SPDs protect electronic equipment from damaging transients. These units are suitable for medium and low exposure level applications that require cost-effective, high quality system protection including:

- Residential/small business
- Light industrial
- Light commercial
- Branch panel protection
- OEM applications

Features, Benefits and Functions

- Advanced surge path technology for high fault current capacity, low impedance, high frequency design
- Rugged NEMA® 4X (IP65) enclosure
- Large diameter, self-protected metal oxide varistors provide long life and fail-safe operation
- LED monitoring of each phase
- Wide range of voltage applications from 100 to 600 Vac and 48 and 125 Vdc
- 5-year free replacement warranty

Optional Features

- External mounting feet

Standards and Certifications

- UL 1449 3rd Edition for surge protective devices
- CE marked
- Vibration tested IEC 60255-21-1 and -2

Note: CE, CSA and UL on AC unit only.

Catalog Number Selection

CVX050/100

CVX 050 - 240S

Per Phase Peak Surge Current
050 = 50 kA
100 = 100 kA

Configuration and Voltage Ranges	
230L	= Single-phase—200, 208, 220, 230, 240, 277 Vac
480L	= Single-phase—480 Vac
240S	= Split-phase—100/200, 110/220, 120/240 Vac
240H	= Three-phase high leg delta—120/240 Vac
208Y	= Three-phase wye (star)—100/174, 110/190, 120/208, 127/220 Vac
480Y	= Three-phase wye (star)—220/380, 230/400, 240/415, 277/480 Vac
600Y	= Three-phase wye (star)—305/525, 347/600 Vac
240D	= Three-phase delta—200, 208, 220, 230, 240 Vac
480D	= Three-phase delta—380, 400, 415, 440, 480 Vac
600D	= Three-phase delta—525, 600 Vac (600D available in 50 kA only)
048DC	= Direct current—48 Vdc ①
125DC	= Direct current—125 Vdc ①

Technical Data and Specifications

CVX050/100 Model Specifications

Description	Specification
Peak kA per phase	50, 100
Peak kA per mode	50
Nominal discharge current	20 kA ①
Short-circuit current rating	100 kA
Single-phase voltages	200, 208, 220, 230, 240, 277, 380, 400, 440, 460, 480 Vac
Split-phase voltages	100/200, 110/220/ 120/240 Vac
High leg delta voltages	240 Vac
Wye system voltages	100/175, 110/190, 120/208, 127/220, 220/380, 230/400, 240/415, 277/480, 305/525, 347/600 Vac
Delta system voltages	200, 208, 220, 230, 240, 380, 400, 415, 440, 480, 525, 600 Vac
Direct current Voltage ②	48 Vdc, 125 Vdc
Input power frequency	47–420 Hz (50/60 Hz typical)
Protection modes	Single-phase: L-N, N-G, L-G Split-phase: L-N, N-G, L-G, L-L High leg delta: L-N, N-G, L-G, L-L, H-N, H-G, H-L Wye: L-N, N-G, L-G, L-L Delta: L-G, L-L Direct current ① (DC): L-L, L-G
Number of ports	1
Specific energy	100 kJ/Ohm
Weight	≈2.0 lbs (1.0 kg)
Operating temperature	–13°F (–25°C) to +140°F (+60°C)
Vibration tested	IEC 60255-21-1 and IEC 60255-21-2

Notes

① 480L, 600D and 600Y units rated 10 kA I_n.

② DC models only available in 50 kA.

2

CVX050/100 Voltage Ratings

Model	System Configuration	Nominal System Voltage	MCOV L-L	MCOV L-N	MCOV L-G	MCOV N-G	UL 1449-3 VPR ① L-L	UL 1449-3 VPR ① L-N	UL 1449-3 VPR ① L-G	UL 1449-3 VPR ① N-G
CVX050										
230L	Single-phase two-wire + ground	200, 208, 220, 230, 240, 277	—	320	640	320	—	1200	1200	1200
480L	Single-phase two-wire + ground	380, 400, 440, 460, 480	—	550	1100	550	—	1800	4000	1800
240S	Split-phase three-wire + ground	100/200, 110/220, 120/240	300	150	300	150	1200	700	1200	800
208Y	Three-phase wye (star) four-wire + ground	100/175, 110/190, 120/208, 127/220	300	150	300	150	1200	700	1200	800
480Y	Three-phase wye (star) four-wire + ground	220/380, 230/400, 240/415, 277/480	640	320	640	320	2500	1200	2000	1200
600Y	Three-phase wye (star) four-wire + ground	305/525, 347/600	840	420	840	420	2500	1500	2500	1500
240D	Three-phase delta three-wire + ground	200, 208, 220, 230, 240	640	—	320	—	2000	—	1200	—
240H	Three-phase high leg delta	240	300	150	150	640	1500	700	1200	700
480D	Three-phase delta three-wire + ground	380, 400, 415, 440, 480	1100	—	550	—	3000	—	1800	—
600D	Three-phase delta three-wire + ground	525, 600	1100	—	700	—	3000	—	2500	—
048DC	Direct current	48 Vdc ②	130	—	65	—	—	—	—	—
125DC	Direct current	125 Vdc ②	288	—	144	—	—	—	—	—
CVX100										
230L	Single-phase two-wire + ground	200, 208, 220, 230, 240, 277	—	320	320	320	—	1200	1200	1200
480L	Single-phase two-wire + ground	380, 400, 440, 460, 480	—	550	550	550	—	1800	1800	1800
240S	Split-phase three-wire + ground	100/200, 110/220, 120/240	300	150	150	150	1200	700	800	700
208Y	Three-phase wye (star) four-wire + ground	100/175, 110/190, 120/208, 127/220	300	150	150	150	1000	600	700	700
480Y	Three-phase wye (star) four-wire + ground	220/380, 230/400, 240/415, 277/480	640	320	320	320	1800	1200	1200	1200
600Y	Three-phase wye (star) four-wire + ground	305/525, 347/600	840	420	420	420	2500	1500	1500	1500
240D	Three-phase delta three-wire + ground	200, 208, 220, 230, 240	640	—	320	—	1800	—	1200	—
240H	Three-phase high leg delta	240	300	150	150	150	1200	700	700	700
480D	Three-phase delta three-wire + ground	380, 400, 415, 440, 480	1100	—	550	—	3000	—	1800	—

Dimensions

Approximate Dimensions in Inches (mm)

CVX050/100 Standard Dimensions

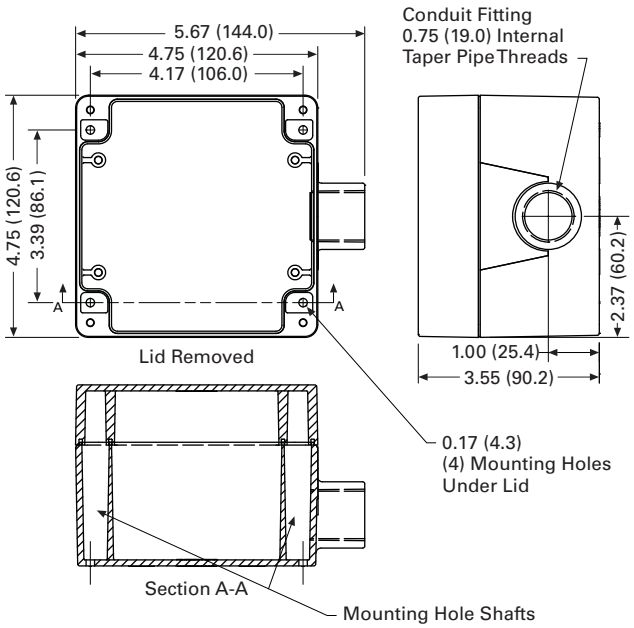

Dimensions are in Inches (mm)

Notes

① UL 1449 3rd Edition VPR (voltage protection rating) test environment: All tests performed with 6-inch lead length, positive polarity.

② DC units available in 50 kA only. Voltages shown are the maximum suggested operating voltages and are not UL certified.

VERSAMATE® SERIES • PLUGS AND RECEPTACLES
200 AMP NEMA 4X METALLIC

ALLEN TERMINALS

Plug

Connector

200 Amp 600VAC/250VDC; 50-400hertz
NEMA 3 4, 4X①

Wire Range

Regular Stranding: #1 - 250
Extra flex: #1 - 250
(.653 max conductor diameter)

UL File No. E10757 CSA Certified File No. LR111846
E213215

E

C

Receptacle

FEATURES-SPECIFICATIONS

200 AMP PLUGS & CONNECTORS				
GROUND STYLE	CIRCUIT	GROMMET RANGE	CATALOG NUMBER	
			PLUG	CONNECTOR
Style I	3W3P	1.0 - 2.5 IN	**VP203512**	**VPR203112**
	4W4P	1.0 - 2.5 IN	**VP204513**	**VPR204113**
Style II	2W3P	1.0 - 2.5 IN	**VP203612**	**VPR203212**
	3W4P	1.0 - 2.5 IN	**VP204612**	**VPR204212**

MODIFICATIONS*	
CATALOG NUMBER	DESCRIPTION
S39⑤	Reverse service for receptacles, plugs & connectors
S37	Polarization for receptacles, plugs & connectors

**See page PR5 for more information on these options.*

200 AMP RECEPTACLES & BACK BOXES				
GROUND STYLE	CIRCUIT	CATALOG NUMBER		
		E② TYPE	C② TYPE	RECEPTACLE ONLY
Style I	3W3P	**VR20312E6**	**VR20312C7**	**VR20312**
	4W4P	**VR20412E6**	**VR20412C7**	**VR20412**
Style II	2W3P	**VR20322E6**	**VR20322C7**	**VR20322**
	3W4P	**VR20422E6**	**VR20422C7**	**VR20422**
Splice box only w/adapter②③		**VJ68**	**VJC78**	Angle adapter only **VJA200**

② *200 Amp Back Boxes are available in dead-end sizes 1-1/2", 2" & 2-1/2" conduit sizes. Dead-end box shown is 2". For other available dead-end box sizes, change the BOLD "**6**" in either the dead-end assembly or box only number as follows: **5**=1-1/2", **6**=2", **7**=2-1/2". Feed through boxes are available in 2-1/2"; use "R" series adapters as required for smaller sizes (sold separately). Assembly catalog numbers are listed for ease of ordering or specification and devices are shipped as components.*

③ *Adapter only can be used to attach receptacle at an angle to a standard sheet metal box.*

NOTE: 200A VersaMate receptacle lids secure with wingnuts for N4X environments when not in use. VersaMate plugs secure with wingnuts and/or lock-ring collar. This exclusive dual method allows retention of competitive plugs that use either wingnuts or a lock-ring collar.

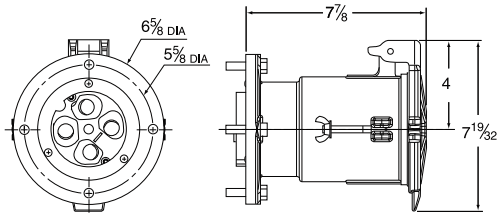

Receptacle

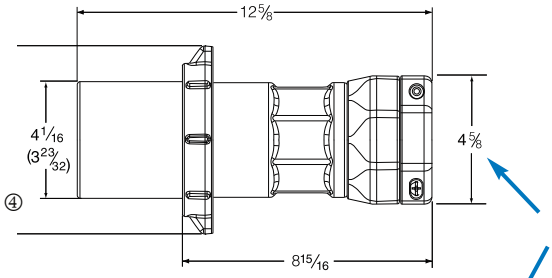

Plug

VersaRange® clamps provide a firm fit for one plug (or connector) over a wide range of cable diameters (competitors often need two – requiring additional sizing decisions).

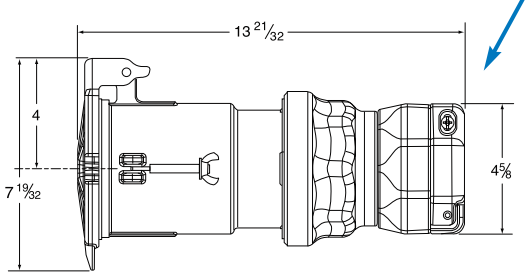

Connector

Back Box Dimensions

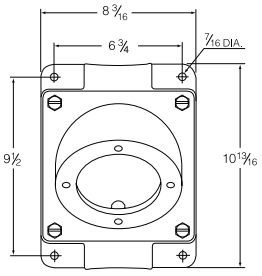

VJC

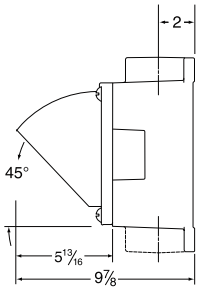

① *Components are intermateable & UL classified with Appleton® Powertite® or Crouse-Hinds® Arktite® devices (when installed in accordance with instructions furnished with device. Assemblies containing components from other manufacturers would have the NEMA type rating of the lowest rated device.*

④ *Dimensions in ( ) are 3 pole devices; balance are 4 pole.*

⑤ *200A 3W4P Reverse Service configured "W" Series and VersaMate® are not intermateable. However, the VersaMate VR20422-S39 receptacle ships with instructions to permanently convert for use with existing PW-6402X SU39 plugs. Factory only configured plugs to fit old RW64C-SU39 receptacles may be ordered as VP-PW64026 SU39.*

PR

HUBBELL KILLARK

U3328-RXL

U4518-O-W

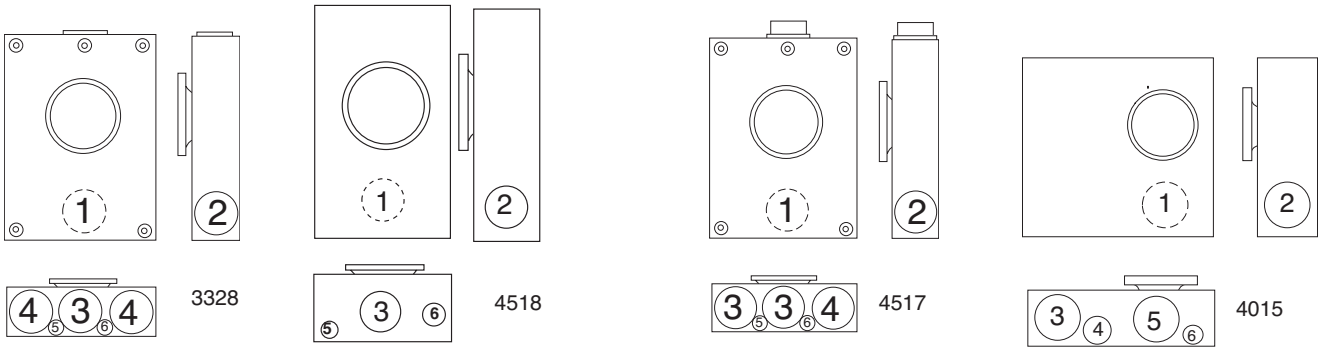

200 AMP–SINGLE POSITION–4 TERMINAL–RING TYPE

AMP	SERVICE	CATALOG NUMBER	HUB	CONNECTORS CU/AL	DIMENSIONS			CONCENTRIC K.O.'S					
					D"	W"	H"	1	2	3	4	5	6
200	OH	**U4517-DL-M4**	2"	#6-350	4 1/8	8	15 1/2	2 1/2	2 1/2	2 1/2	—	1/4	1/4, 1/2
200	OH/UG	**U4518-XL-W**	C.P.	#6-350	4 1/8	11	15 1/2	2	2	2	2 1/2	1/4, 1/2	1/4
200	UG	**U4518-O-W**	BLANK	#6-350	4 1/8	11	15 1/2	2	2	2	2 1/2	1/4, 1/2	1/4
200	UG	**U4015-O**	BLANK	#6-350	6	14	16 1/4	2 1/2	2 1/2	3	1 1/2	2 1/2	1/4, 1/2

200 AMP–7 TERMINAL–RING TYPE

AMP	SERVICE	CATALOG NUMBER	HUB	CONNECTORS CU/AL	DIMENSIONS			CONCENTRIC K.O.'S					
					D"	W"	H"	1	2	3	4	5	6
200	OH/UG	**U3328-RXL**	C.P.	#6-350	4 7/8	13	19	3	2 1/2	3	3	1/4	1/4, 1/2

FIFTH TERMINAL: For field mounted fifth terminal order catalog number **K5T** to fit into square opening at the 9 o'clock position.

HUBS: For proper hub selection see the hub suffix chart on the accessory page.

CONNECTORS: Extruded aluminum connectors are tin plated.

SEALING RINGS: The above ring type units are supplied with an **MR-4** screw type sealing ring as standard.

Utility requirements for this equipment may vary. Always consult the serving utility for their requirements before ordering or installing equipment in this catalog.

EQUIPMENT SUBMITTAL
FOR:

SAND COULEE, MT

VOLUME 1 OF 1

SPECIFICATION SECTIONS:
16190 – WATER SYSTEMS CONTROL & TELEMETRY

CUSTOMER:
UNITED ELECTRIC INC.

ENGINEER:
NCI ENGINEERING

ICS PROJECT NO. 2848

AUGUST 2014

water and wastewater control solutions
Instrument Control Systems ICS HEALY-RUFF
CSIA CERTIFIED

13005 16TH AVE. NORTH • SUITE 100 • PLYMOUTH MN 55441
PHONE: (763) 559-0568 • FAX: (763) 559-2187

INSTALLATION * ENGINEERING * SERVICE

water and wastewater control solutions
Instrument Control Systems ICS HEALY-RUFF
Instrument Control Systems, Inc. • 13005 16th Avenue North, Suite 100 • Plymouth, MN 55441
Telephone: 763-559-0568 • Fax: 763-559-2187 • Web: www.icshealyruff.com

8/12/14

Subject: 2848 – Sand Coulee, MT

Eleven sets of submittals are being forwarded for your review.
The following comments and/or questions address issues that are in need of clarification relating to this submittal.

1. Specification 16190 paragraph 5.0.C.2 states that the enclosure is not to be less than 60”H x 48”W x 10”D. Plan Drawing P-5 shows the enclosure to be 16” deep. We have designed the enclosure to be 16” deep. The components for this project could be accommodated in a more shallow enclosure. Please specify the enclosure depth preferred.
2. Please provide the range for the Well Flow Rate. _____ GPM

Please call me with any questions or comments.

Sincerely,

John Stelter
Project Engineer
ICS Healy-Ruff

INDEX

ICS Job # 2848

SPEC SECTION	DESCRIPTION	TAB
	RELAYS AND TIMERS	1
	POWER SUPPLIES	
	PILOT DEVICES 22mm	
	ELAPSED TIME METERS	
	TERMINAL BLOCKS	
	SURGE PROTECTOR--THREE PHASE	2
	PHASE LOSS UNDER VOLTAGE MONITOR/RELAY	
	CIRCUIT BREAKER	
	CONTACTOR	
	OVERLOAD	
	MICRO-VPAC IICE 5.7" COLOR TOUCH SCREEN W/E	3
	SURGE PROTECTOR--ANALOG	
	SUBMERSIBLE WELL LEVEL SENSOR	
	INSTRUMENTATION	
	VPN ETHERNET ROUTER/FIREWALL	
	UNINTERRUPTIBLE POWER SUPPLY	4
	THERMOSTAT	
	HEATER FLEXIBLE	
	CIRCUIT BREAKER 1 POLE	
	CONTROL DESCRIPTION	5
	DRAWINGS	6

water and wastewater control solutions
Instrument Control Systems ICS HEALY-RUFF
csia CERTIFIED
13005 16TH AVE. NORTH • SUITE 100 • PLYMOUTH MN 55441
PHONE: (763) 559-0568 • FAX: (763) 559-2187
www.icshealyruff.com

ENGINEERING • INSTALLATION • SERVICE

TAB 1

SPECIFICATION FORM

PROJECT NAME	BY	DATE	REVISION	ICS PROJECT NO
SAND COULEE, MT	SM	08/2014	SUBMITTAL	2848

SPECIFICATION:

DEVICE: RELAYS AND TIMERS

MANUFACTURER: IDEC

MODEL: SEE ATTACHED FOR STANDARD AND STOCKED RELAYS AND TIMERS

RANGE / SCALE:

INPUT:

OUTPUT:

QUANTITY: 1

FEATURES: UL RECOGNIZED
PROVIDED WITH INDICATOR LIGHT

RELAY 4PDT 6A 120VAC	RU4S-C-A110
RELAY 4PDT 6A 24VDC	RU4S-C-D24
TIME DELAY RELAY	GT5Y-4SN6A100
RELAY 3P 10A WITH INDICATOR LIGHT	RR3B-UL-AC120V

RU Series — General Purpose Relays

Key features of the RU series include:

- **Non-polarized LED indicator standard**
- **Solder-free construction (spot welded, no solder points, lead-free)**
- **No internal wires**
- **Mechanical flag indicator standard**
- **Manual latching lever with color coding for AC or DC coil**
- **Available without latching lever (or with momentary check button)**
- **Snap-on marking plate standard**
- **Cadmium-free contacts - RoHS compliant**
- **Color coded coils for visual distinction**
- **Contact rating 6A: 4PDT**
  10A: DPDT

Specifications

	RU2	RU4
Contact Material	AgSnOIn (silver tin oxide indium)	AuAg/Ag (gold-silver alloy on silver)
Contact Resistance	50 mΩ maximum	
Minimum Applicable Load	24VDC, 5mA (reference value)	1V DC, 1mA (standard) 1V DC, 0.1mA (bifurcated)
Operating Time	20 msec maximum	
Release Time	20 msec maximum	
Maximum Continuous Applied Voltage (AC/DC) at 20°C	110%	
Minimum Operating Voltage (AC/DC) at 20°C	80%	
Drop-Out Voltage (AC) at 20°C	30%	
Drop-Out Voltage (DC) at 20°C	10%	
Power Consumption	1.1-1.4VA (AC); 0.9-1.0W (DC)	
Dielectric Strength	Between contact and coil: 2,500VAC, 1 minute Between poles: 2,500VAC, 1 minute Between contacts of the same pole: 1,000VAC, 1 minute	Between contact and coil: 2,500VAC, 1 minute Between poles: 2,000VAC, 1 minute Between contacts of the same pole: 1,000VAC, 1 minute
Frequency Response	1,800 operations/hr	
Vibration Resistance	Operating extremes: 10 to 55Hz, Amplitude 1.0 mm p-p Damage limits: 10 to 55Hz, Amplitude 1.0 mm p-p	
Shock Resistance	Operating extremes: 150 m/s^2 (15G) Damage limits: 1,000 m/s^2 (100G)	
Life Expectancy	Mechanical: AC: 20,000,000 operations minimum DC: 30,000,000 operations minimum Electrical: see electrical life curve	
Degree of Protection	IP40	
Operating Temperature	-55 to +70°C (no freezing)	
Weight	35g	

cULus UL Recognized
File No. E66043, Vol 8, sec. 1
Vol 8, sec. 2

TÜV PRODUCT SERVICE B020813332451

CSA Certified
File No. LR35144-135844

CE

Ordering Information

Consult factory for other voltages.

Basic Part No. **Coil Voltage:**

RU 4 S – ( ) – D12

# of Contacts
2 = DPDT
4 = 4PDT
42 = 4PDT bifurcated contacts

Option*
(Blank) = with latching check button
C = without check button
M = momentary check button
D = surge suppression diode (DC coils only)

Coil Voltage Code**
D12 = 12V DC
D24 = 24V DC
D110 = 110V DC
A24 = 24V AC
A110 = 110-120V AC
A220 = 220-240V AC

1. **All come with bi-polar LED, mechanical flag indicator, marking plate.*
2. ***Contact IDEC for other voltages.*

Part Numbers

Part Numbers: RU Series with Options

Termination		Contact Configuration	Standard	Without Latching Lever	With Momentary Check Button	With Diode*
S: Solder/plugin	Standard	DPDT	RU2S	RU2S-C	RU2S-M	RU2S-D
		4PDT	RU4S	RU4S-C	RU4S-M	RU4S-D
	Bifurcated	4PDT	RU42S	RU42S-C	RU42S-M	RU42S-D

**DC coils only.*

Part Numbers: Sockets

Relays	Spring Clamp DIN Rail Mount	Standard DIN Rail Mount	Finger-Safe DIN Rail Mount	Panel Mount	PC Mount
RU2S	SU2S-11L	SM2S-05	SM2S-05C	SY4S-51	SY4S-61 SY4S-62
RU4S	SU4S-11L	SY4S-05	SY4S-05C		

See Section F for details on sockets. All DIN rail mount sockets shown above can be mounted using DIN rail BNDN1000.

Springs & Clips (optional)	
Part Number	Use With
SFA-101① SFA-202② SY4S-02F1③	use with SY4S-05, -05C SM2S-05, -05C SU4S-11L, SU2S-11L
SFA-301① SFA-302② SY4S-51F1③	use with SY4S-51, -61

① Top latch
② Side latch
③ Pullover spring

Part Numbers: Marking Strip

Item	Part Number	Quantity
RU Marking Strip	RU9Z-P①PN10,	10 pieces per package

In place of ①, insert color code from chart at right.

Marking Strip Color Code

Color	Code	Color	Code
Yellow*	Y	Blue	S
Green	G	White	W
Amber	A		

**yellow marking strip standard on all RU relays.*

Ratings

Coil Ratings

Rated Voltage		Voltage Code	Coil Tape Colors	Rated Current ±15% at 20°C	Coil Resistance ±10% at 20°C	Inrush Current	Inductance	
							Energizing	De-Energizing
AC	24V	A24	white	37.5mA	164 Ω	60mA	1.8H	0.96H
	110-120V	A110	dark blue	8.4mA	4,550 Ω	14mA	36H	22H
	220-240V	A220	red	4.2mA	18,230Ω	7mA	144H	87H
DC	12V	D12	yellow*	83.3mA	160 Ω	N/A		
	24V	D24	green	41.7mA	605 Ω			
	110V	D110	yellow*	9.1mA	12, 100 Ω			

**Voltage printed in black.*

Contact Ratings (Standard)

Voltage		Resistive	Inductive
30V DC	DPDT	10A	5A
	4PDT	6A	3A
110V DC	DPDT	0.6A	0.3A
	4PDT	0.4A	0.2A
120V AC	DPDT	10A	5A
	4PDT	6A	3A
240V AC	DPDT	10A	5A
	4PDT	6A	3A

Contact Ratings (Bifurcated)

Voltage		Resistive	Inductive
30V DC	4PDT	3A	1.5A
110V DC	4PDT	–	–
120V DC	4PDT	3A	0.8A
250V DC	4PDT	3A	0.8A

Internal Circuit*

RU2S Standard

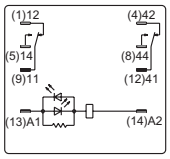

Over 24V AC/DC

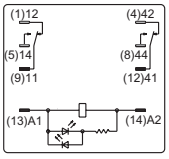

24V AC/DC or less

RU2S-D with Diode

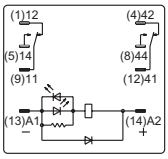

Over 24V DC

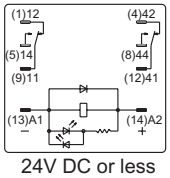

24V DC or less

RU4S/RU42S Standard

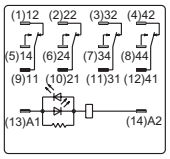

Over 24V AC/DC

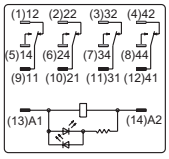

24V AC/DC or less

RU4S-D/RU42S-D with Diode

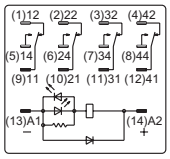

Over 24V DC

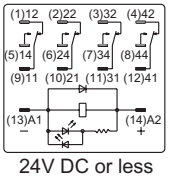

24V DC or less

Image as viewed from bottom of relay. Refer to socket for exact wiring layout (Section F).

Numbers not in parenthesis follow international system of labeling terminals.

E

Relays

Electrical Life Curves

RU2 (Resistive Load)

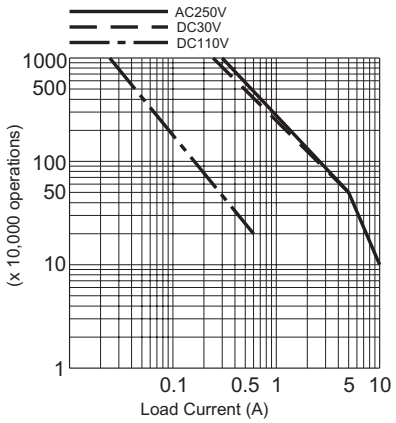

RU4 (Resistive Load)

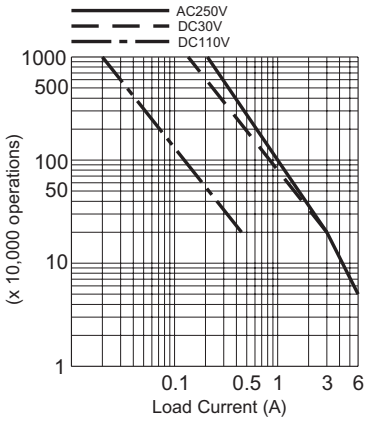

RU42 (Resistive Load)

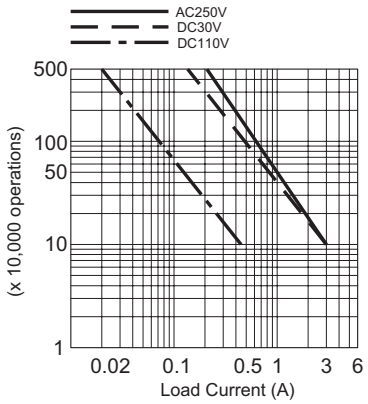

RU2 (Inductive Load)

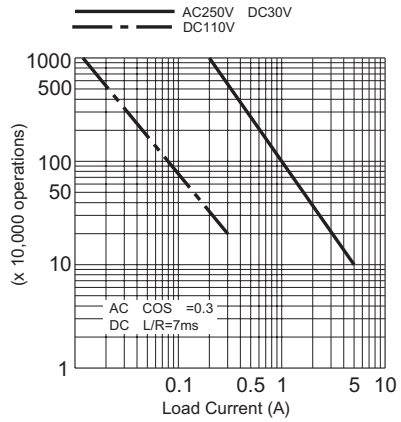

RU4 (Inductive Load)

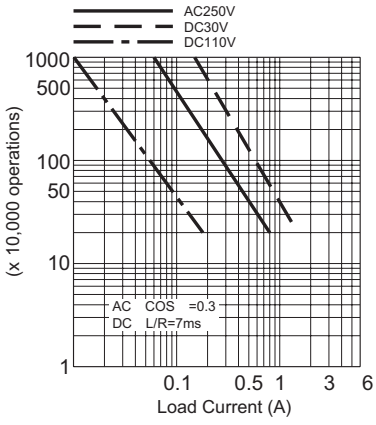

RU42 (Inductive Load)

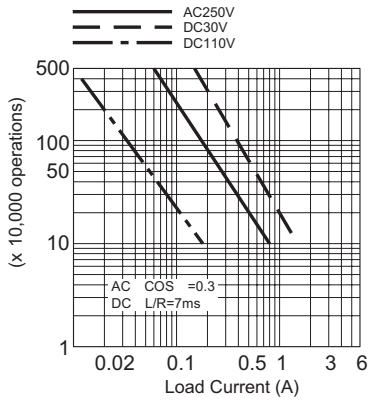

Maximum Switching Capacity

RU2 (Maximum Load)

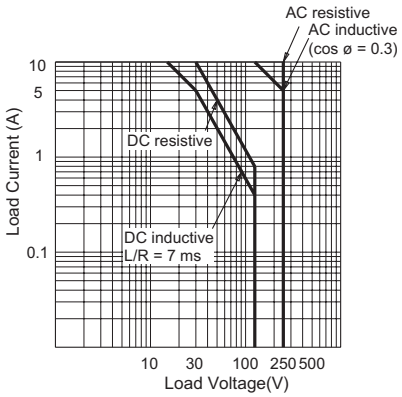

RU4 (Maximum Load)

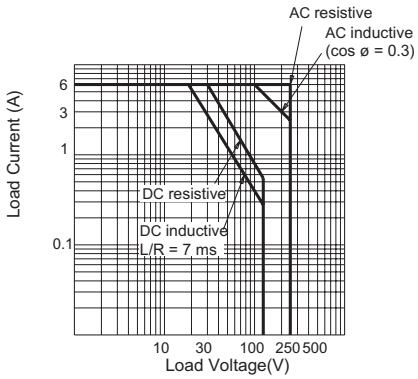

RU42 (Maximum Load)

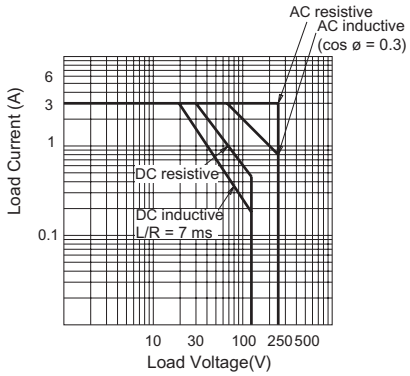

Dimensions & Mounting Hole Layouts

RU2
Dimensions

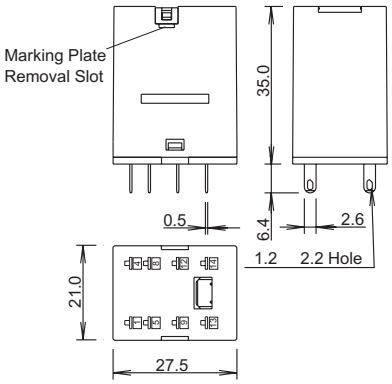

Marking plate removal slot is provided only on one side.
Insert a flat screwdriver into the slot to remove the marking plate.

RU4/RU42
Dimensions

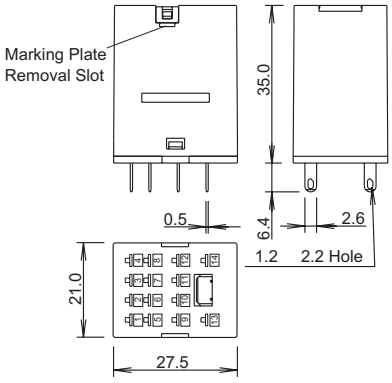

Marking plate removal slot is provided only on one side.
Insert a flat screwdriver into the slot to remove the marking plate.

Dimensions are in mm.

GT5Y Series — ON Delay Timers

Key features of the GT5Y series include:

- 4PDT, 3A or DPDT, 5A contacts
- 4 time ranges
- Repeat error ±0.2% maximum
- Control settings by hand or screwdriver
- Power ON and timing out LED indicators
- Uses the same sockets and hold-down clips as IDEC's RY4S and RU series relays

UL, c-UL Listed
File No. E55996

Specifications

		GT5Y-2	GT5Y-4
Rated Operating Voltage		100 to 120V AC (50/60Hz) 200 to 240V AC (50/60Hz) 24V DC 24V AC 12V DC	
Contact Form		DPDT	4PDT
Rated Load	Resistive Load	220V AC, 5A 30V DC, 5A	220V AC, 3A 30V DC, 3A
	Inductive Load	220V AC, 2A 30V DC, 2.5A	220V AC, 0.8A 30V DC, 1.5A
Allowable Contact Power	Resistive Load	1100VA AC 150W DC	660VA AC 90W DC
	Inductive Load Cos ø = 0.3 L/R = 7msec	440VA AC 75W DC	176VA AC 45W DC
Allowable Voltage		250V AC, 125V DC	
Allowable Current		5A	3A
Temperature Error		±3% maximum (over –10 to 50°C, reference temperature 20°C)	
Setting Error		±10% maximum	
Reset Time		When turning power off after time up: 0.1 second maximum When turning power off before time up: 1 second maximum	
Insulation Resistance		100MΩ minimum	
Dielectric Strength		2,000V AC, 1 minute (except between contacts of the same pole)	
Vibration Resistance		100N (approximate 10G)	
Shock Resistance		Operating extremes: 100N (approximate 10G) Damage limits: 500N (approximate 50G)	
Power Consumption		100V AC type: 1.5VA (at 50Hz) 200V AC type: 1.6VA (at 50Hz) 24V DC type: 0.9W	
Electrical Life		500,000 operations minimum (220V AC, 5A)	200,000 operations minimum (110V AC, 3A)
Mechanical Life		50,000,000 operations minimum	
Operating Temperature		–10 to +50°C	
Operating Humidity		45 to 85% RH	

1. Minimum applicable load: GT5Y-2: 5V DC, 20mA (reference value); GT5Y-4: 5V DC, 10mA (reference value).
2. Inductive load: cos ø =0.3, L/R=7msec.

Part Numbering List

Mode of Operation	Contact	Output	Rated Voltage	Time Range	Complete Part No.
ON-Delay	DPDT	220V AC/ 30V DC, 5A	100 to 120V AC	1S/10S/1M/10M	GT5Y-2SN1A100
				3S/30S/3M/30M	GT5Y-2SN3A100
				6S/60S/6M/60M	GT5Y-2SN6A100
			200 to 240V AC	1S/10S/1M/10M	GT5Y-2SN1A200
				3S/30S/3M/30M	GT5Y-2SN3A200
				6S/60S/6M/60M	GT5Y-2SN6A200
			12V DC	1S/10S/1M/10M	GT5Y-2SN1D12
				3S/30S/3M/30M	GT5Y-2SN3D12
				6S/60S/6M/60M	GT5Y-2SN6D12
			24V DC	1S/10S/1M/10M	GT5Y-2SN1D24
				3S/30S/3M/30M	GT5Y-2SN3D24
				6S/60S/6M/60M	GT5Y-2SN6D24
			24V AC	1S/10S/1M/10M	GT5Y-2SN1A24
				3S/30S/3M/30M	GT5Y-2SN3A24
				6S/60S/6M/60M	GT5Y-2SN6A24
	4PDT	220V AC/30V DC, 3A	100 to 120V AC	1S/10S/1M/10M	GT5Y-4SN1A100
				3S/30S/3M/30M	GT5Y-4SN3A100
				6S/60S/6M/60M	GT5Y-4SN6A100
			200 to 240V AC	1S/10S/1M/10M	GT5Y-4SN1A200
				3S/30S/3M/30M	GT5Y-4SN3A200
				6S/60S/6M/60M	GT5Y-4SN6A200
			12V DC	1S/10S/1M/10M	—
				3S/30S/3M/30M	GT5Y-4SN3D12
				6S/60S/6M/60M	—
			24V DC	1S/10S/1M/10M	GT5Y-4SN1D24
				3S/30S/3M/30M	GT5Y-4SN3D24
				6S/60S/6M/60M	GT5Y-4SN6D24
			24V AC	1S/10S/1M/10M	GT5Y-4SN1A24
				3S/30S/3M/30M	GT5Y-4SN3A24
				6S/60S/6M/60M	GT5Y-4SN6A24

For sockets and accessories, see page 856.

Timing Ranges

Code	Scale	Time Range Indication		Time Range
1S	0 to 10	x 0.1	S	0.1 second to 1 second
10S		x 1	S	0.2 second to 10 seconds
1M		x 0.1	M	1.2 seconds to 1 minute
10M		x 1	M	12 seconds to 10 minutes
3S	0 to 3	x 1	S	0.1 second to 3 seconds
30S		x 10	S	0.5 second to 30 seconds
3M		x 1	M	3 seconds to 3 minutes
30M		x 10	M	30 seconds to 30 minutes
6S	0 to 6	x 1	S	0.1 second to 6 seconds
60S		x 10	S	1 second to 60 seconds
6M		x 1	M	6 seconds to 6 minutes
60M		x 10	M	1 minute to 60 minutes

Timing Diagram/Schematics/Electrical Life Curves

	GT5Y-2	GT5Y-4
	DPDT	4PDT
Internal Connections (bottom view)	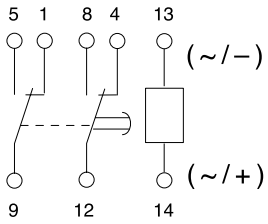	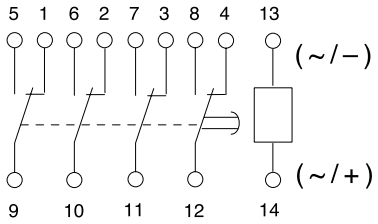
Operation Mode: ON-Delay	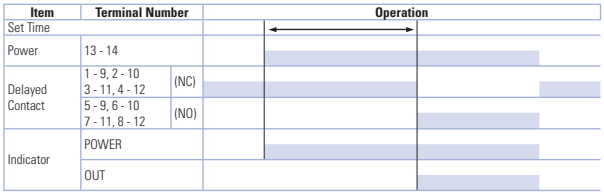 For an explanation of timing modes, see page 794.	

Electrical Life Curves

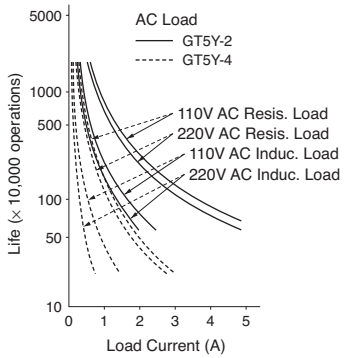

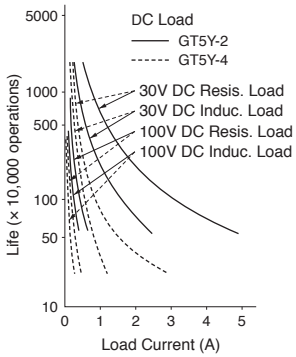

Accessories

DIN Rail Mounting Accessories

DIN Rail/Surface Mount Sockets and Hold-Down Springs

DIN Rail Mount Socket			Applicable Hold-Down Springs	
Style	Appearance	Part No.	Appearance	Part No.
14-Blade Screw Terminal		SY4S-05		SFA-202
14-Blade Screw Terminal (fingersafe)		SY4S-05C		
DIN Mounting Rail Length 1000mm		BNDN1000		

Panel Mounting Accessories

Part Numbers: Panel Mount Socket and Hold-Down Springs

Panel Mount Socket			Applicable Hold-Down Springs	
Style	Appearance	Part No.	Appearance	Part No.
14-Blade Solder Terminal		SY4S-51	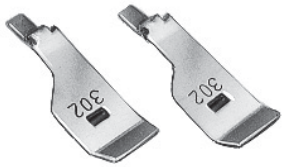	SFA-302

PCB Mounting Accessories

Part Numbers: PCB Mount Sockets with Applicable Hold-Down Springs

PCB Mount Socket			Applicable Hold-Down Springs	
Style	Appearance	Part No.	Appearance	Part No.
14 Blade, PCB Terminal		SY4S-61	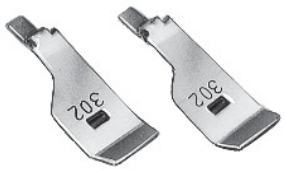	SFA-302
14 Blade, PCB Terminal		SY4S-62		SY4S-02F1

Dimensions

GT5Y Timer, Blade with SY4S-05

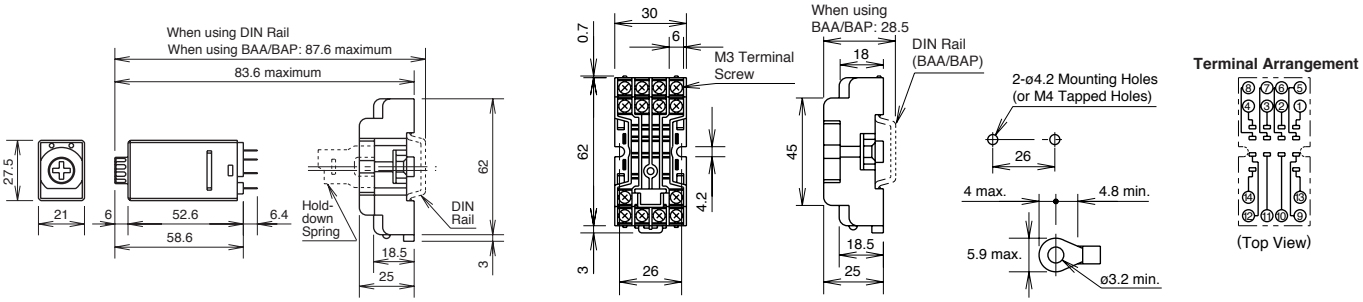

General Instructions for All Timer Series

Load Current

With inductive, capacitive, and incandescent lamp loads, inrush current more than 10 times the rated current may cause welded contacts and other undesired effects. The inrush current and steady-state current must be taken into consideration when specifying a timer.

Contact Protection

Switching an inductive load generates a counter-electromotive force (back EMF) in the coil. The back EMF will cause arcing, which may shorten the contact life and cause imperfect contact. Application of a protection circuit is recommended to safeguard the contacts.

Temperature and Humidity

Use the timer within the operating temperature and operating humidity ranges and prevent freezing or condensation. After the timer has been stored below its operating temperature, leave the timer at room temperature for a sufficient period of time to allow it to return to operating temperatures before use.

Environment

Avoid contact between the timer and sulfurous or ammonia gases, organic solvents (alcohol, benzine, thinner, etc.), strong alkaline substances, or strong acids. Do not use the timer in an environment where such substances are prevalent. Do not allow water to run or splash on the timer.

Vibration and Shock

Excessive vibration or shocks can cause the output contacts to bounce, the timer should be used only within the operating extremes for vibration and shock resistance. In applications with significant vibration or shock, use of hold down springs or clips is recommended to secure a timer to its socket.

Time Setting

The time range is calibrated at its maximum time scale; so it is desirable to use the timer at a setting as close to its maximum time scale as possible. For a more accurate time delay, adjust the control knob by measuring the operating time with a watch before application.

Input Contacts

Use mechanical contact switch or relay to supply power to the timer. When driving the timer with a solid-state output device (such as a two-wire proximity switch, photoelectric switch, or solid-state relay), malfunction may be caused by leakage current from the solid-state device. Since AC types comprise a capacitive load, the SSR dielectric strength should be two or more times the power voltage when switching the timer power using an SSR.

Generally, it is desirable to use mechanical contacts whenever possible to apply power to a timer or its signal inputs. When using solid state devices, be cautious of inrushes and back-EMF that may exceed the ratings on such devices. Some timers are specially designed so that signal inputs switch at a lower voltage than is used to power the timer (models designated as “B” type).

Timing Accuracy Formulas

Timing accuracies are calculated from the following formulas:

Repeat Error

$$= \pm \frac{1 \times \text{Maximum Measured Value} - \text{Minimum Measured Value}}{2 \text{ Maximum Scale Value}} \times 100\%$$

Voltage Error

$$= \pm \frac{Tv - Tr}{Tr} \times 100\%$$

Tv: Average of measured values at voltage V
Tr: Average of measured values at the rated voltage

Temperature Error

$$= \pm \frac{Tt - T20}{T20} \times 100\%$$

Tt: Average of measured values at °C
T20: Average of measured values at 20°C

Setting Error

$$= \pm \frac{\text{Average of Measured Values} - \text{Set Value}}{\text{Maximum Scale Value}} \times 100\%$$

RR Series — General Purpose Power Relays

Key features of the RR series include:

- **High reliability and long service life**
- **Available in octal (8- and 11-pin) or square (11-blade) base**
- **Options include check button for test operation, indicator light, and side flange (contact IDEC for diodes)**
- **DIN rail, surface and panel type sockets available for a wide range of mounting applications**

Specifications

Contact Material	Silver
Contact Resistance	30mΩ maximum (initial value)
Minimum Applicable Load	24V DC/10mA, 5V DC/20mA (reference value)
Operating Time	25ms maximum
Release Time	25ms maximum
Maximum Continuous Applied Voltage (AC/DC) at 20°C	110% of the rated voltage
Minimum Operating Voltage (AC/DC) at 20°C	80% of the rated voltage
Drop-Out Voltage (AC) at 20°C	30% of the rated voltage
Drop-Out Voltage (DC) at 20°C	15% of the rated voltage
Power Consumption	AC: approximately 3VA (50Hz), 2.5VA (60Hz) DC: approximately 1.5W
Insulation Resistance	100MΩ minimum (measured with 500V DC megger)
Dielectric Strength	**Pin** (RR2P, RR3PA) Between live and dead parts: 1,500V AC, 1 minute Between contact circuit and operating coil: 1,500V AC, 1 minute Between contact circuits: 1,500V AC, 1 minute (1,000V AC between NO-NC contacts)
	Blade (RR1BA, RR2BA, RR3B) Between live and dead parts: 2,000V AC, 1 minute Between contact circuit and operating coil: 2,000V AC, 1 minute Between contact circuits: 2,000V AC, 1 minute Between contacts of same polarity: 1,000V AC, 1 minute
Frequency Response	1,800 operations/hour
Temperature Rise	Coil: 85°C maximum Contact: 65°C maximum
Vibration Resistance	0 to 6G (55Hz maximum)
Shock Resistance	100N (approximately 10G)
Life Expectancy	Electrical: over 500,000 operations (120V, 50/60Hz, 10A) Mechanical: over 10,000,000 operations
Operating Temperature	–30 to +70°C
Weight	RR2P: 90g, RR3PA: 96g (approximately) RR1BA/RR2BA/RR3B: 82g (approximately)

UL Recognized
File No. E66043

CSA Certified
File No. LR35144

TÜV PRODUCT SERVICE
File No. B020813332452*
* Pin Style Only
(does not apply to blade style)

CE*
* Pin Style Only

Ordering Information

Order standard voltages for fastest delivery. Allow extra delivery time for non-standard voltages.

Basic Part No.	Coil Voltage:
RR3PA-U	**AC120V**

Part Numbers

Part Numbers: RR Series with Options

Termination	Contact Configuration	Basic Part No.	Indicator Light	Check Button	Light and Check Button	Side Flange
P, PA (pin)	DPDT	RR2P-U	RR2P-UL	RR2P-UC	RR2P-ULC	—
	3PDT	RR3PA-U	RR3PA-UL	RR3PA-UC	RR3PA-ULC	—
B, BA (blade)	SPDT	RR1BA-U	RR1BA-UL	RR1BA-UC	RR1BA-ULC	RR1BA-US
	DPDT	RR2BA-U	RR2BA-UL	RR2BA-UC	RR2BA-ULC	RR2BA-US
	3PDT	RR3B-U	RR3B-UL	RR3B-UC	RR3B-ULC	RR3B-US

1. RR1BA, RR2BA, and RR3PA are U.S. standard terminal arrangements.
2. For diode option on DC coils please consult factory.

Ratings

Coil Ratings

Rated Voltage		Rated Current ±15% at 20°C		Coil Resistance ±10% at 20°C	Inrush Current	Inductance	
		60Hz	50Hz			Energizing	De-Energizing
AC	6V	420mA	490mA	4.9Ω	720mA	0.04H	0.02H
	12V	210mA	245mA	18Ω	365mA	0.15H	0.08H
	24V	105mA	121mA	79Ω	182mA	0.57H	0.32H
	120V	20.5mA	24mA	2100Ω	35mA	15H	8.2H
	240V	10.5mA	12.1mA	8330Ω	18mA	57H	32H
DC	6V	240mA		25Ω	N/A		
	12V	120mA		100Ω			
	24V	60mA		400Ω			
	48V	30mA		1600Ω			
	110V	13mA		8460Ω			

Contact Ratings

	Resistive			Inductive			Motor Load
Voltage	Nominal	UL	CSA	Nominal	UL	CSA	UL
30V DC	10A	10A	10A	7.5A	7A	7.5A	—
110V DC	0.5A	—	—	0.3A	—	0.5A	—
120V AC	10A	10A	10A	7.5A	7.5A	7.5A	1/4 hp
240V AC	7.5A	10A	10A	5A	7A	7A	1/3 hp

Inductive load: cos ø = 0.3, L/R = 7ms.

Applicable Sockets

Part Numbers: Sockets

Relays	Standard DIN Rail Mount	Finger-Safe DIN Rail Mount	Panel Mount
RR2P	SR2P-05 SR2P-06	SR2P-05C	SR2P-51
RR3PA	SR3P-05 SR3P-06	SR3P-05C	SR3P-51
RR1BA RR2BA RR3B	SR3B-05	—	SR3B-51

Springs & Clips (optional)	
Part Numbers	Use With Socket
SR2B-02F1	SR2P-05, -05C, -06
SR3P-01F1	SR2P-51, SR3P-51
SR3B-02F1	SR3P-05, -05C, -06 SR3B-05, -51
SR3P-01F1	SR3P-51
SR3B-02F1	SR3B-05 SR3B-51

See Section F for details on sockets. All DIN rail mount sockets listed can be mounted using DIN rail BNDN1000.

Internal Circuits

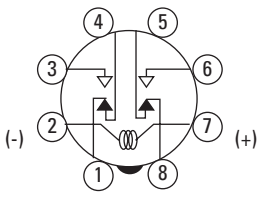

RR2P

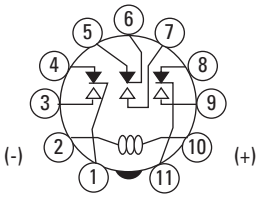

RR3PA

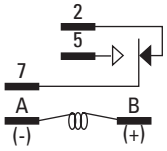

RR1BA

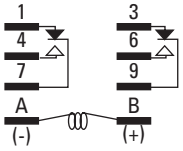

RR2BA

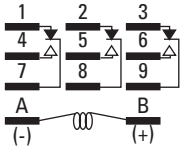

RR3B

Image as viewed from bottom of relay. Refer to socket for exact wiring layout (Section F).

Electrical Life Curves

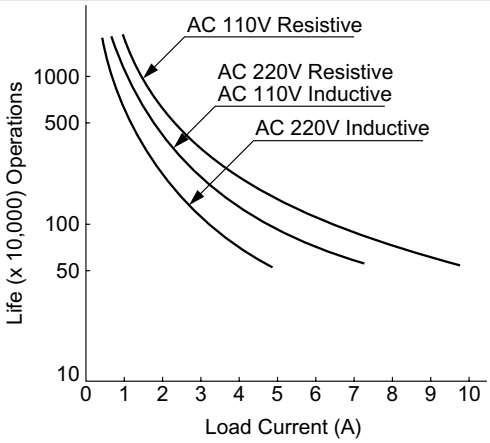

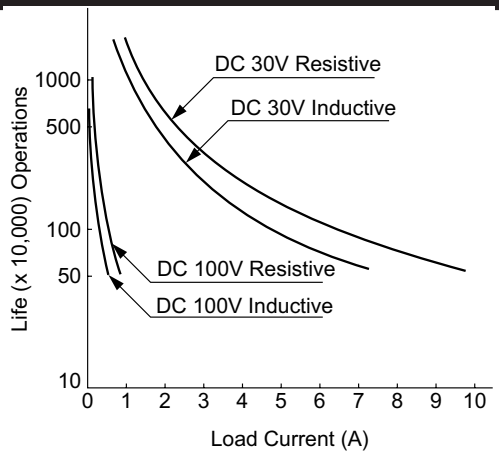

Maximum Switching Capacity

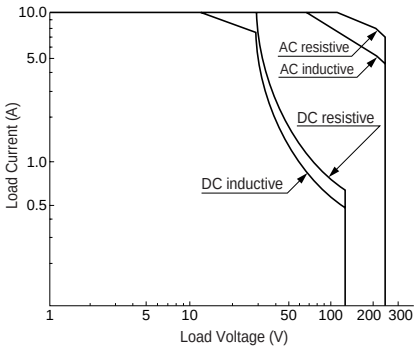

Dimensions

8-Pin
RR2P

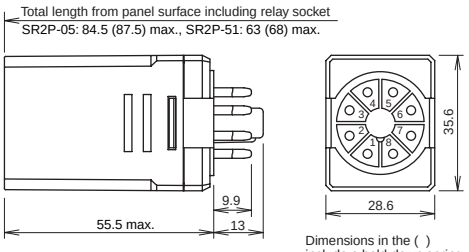

11-Pin
RR3PA

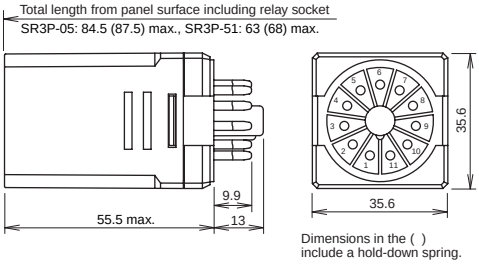

Blade
RR1BA, RR2BA, RR3B

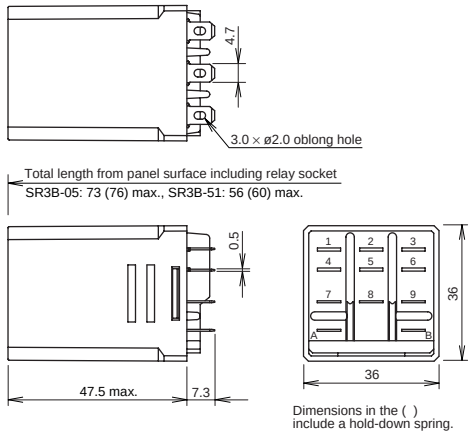

***Note**: Dimensions in [ ] include hold-down spring.*

Side Flange
RR1BA-US, RR2BA-US, RR3B-US

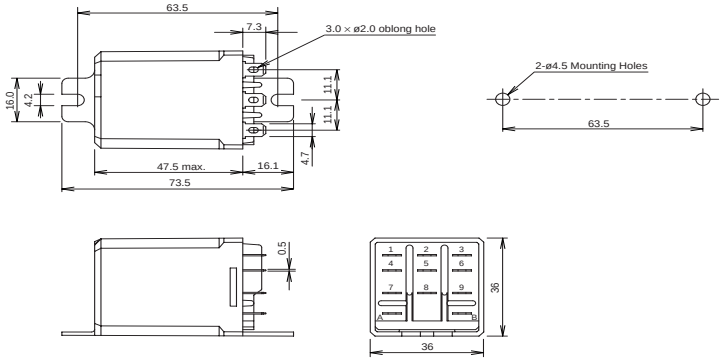

All dimensions in mm.

E Relays

SPECIFICATION FORM

PROJECT NAME	BY	DATE	REVISION	ICS PROJECT NO
SAND COULEE, MT	SM	08/2014	SUBMITTAL	2848

SPECIFICATION:

DEVICE: POWER SUPPLIES

MANUFACTURER: IDEC

MODEL: PS5R

RANGE / SCALE: 24VDC

INPUT: 120VAC

OUTPUT: 24VDC

QUANTITY: 1

FEATURES: UL LISTED

PRICE	DESCRIPTION	PART NUMBER
$52.70	24VDC, 3.75 AMPS	PS5R-SE24

Slim Line Power Supplies PS5R-S

Features

- Lightweight and Compact in size
- Wide Power Range: 15W – 240W
- Universal Input:
  15W to 90W: 85-264V AC/100-370V DC
  120W and 240W: 85-264V AC/100-350V DC
- Power Factor Correction (EN61000-3-2) for 60W to 240W
- Meets SEMI F47 Sag Immunity (120W & 240W)
- NEC Class 2 rated (15W, 30W & 60W)
- Approved for Class 1, Div. 2 Hazardous Locations
- Fused input
- Overcurrent protection, auto-reset
- Overvoltage protection, shut down
- Spring-up Screw Terminal type, IP20
- DIN rail or Panel Surface Mount
- Approvals:
  CE Marked, TÜV, c-UL, UL 508, UL 1310 (PS5R-SB, -SC, -SD), UL 1604, EN 50178:1997, LVD: EN60950:2000, EMC: Directive, EN61204-3:2000 (EMI: Class B, EMS: Industrial)

For more information on these and other IDEC power supplies, visit:

www.idec.com/powersupply

Specifications

Part Numbers		**5V DC output**	**PS5R-SB05**	–	–	–	–	–
		12V DC output	**PS5R-SB12**	**PS5R-SC12**	–	–	–	–
		24V DC output	**PS5R-SB24**	**PS5R-SC24**	**PS5R-SD24**	**PS5R-SE24**	**PS5R-SF24**	**PS5R-SG24**
Output Capacity			15W (5V Model is 10W)	30W	60W	90W	120W	240W
Input	Input Voltage (single-phase, 2-wire)		85 to 264 VAC, 100 to 370 VDC				85 to 264V AC, 100 to 350V DC	
	Input Current (maximum)	100VAC	0.45A	0.9A	1.7A	2.3A	1.8A	3.5A
		200VAC	0.3A	0.6A	1.0A	1.4A	1.0A	1.7A
	Internal Fuse Rating		2A	3.15A	3.15A	4A	4A	6.3A
	Inrush Current (cold start)		50A maximum (at 200V AC)					
	Leakage Current (at no load)		132V AC: 0.38 mA maximum 264V AC: 0.75 mA maximum	0.75mA maximum			1mA maximum	
	Typical Efficiency	5V DC	69%	–	–	–	–	–
		12V DC	75%	78%	–	–	–	–
		24V DC	79%	80%	83%	82%	84%	
Output	Output Current Ratings	5V DC	2.0A	–	–	–	–	–
		12V DC	1.2A	2.5A	–	–	–	–
		24V DC	0.65A	1.3A	2.5A	3.75A	5A	10A
	Voltage Adjustment		±10% (V. ADJ control on front)					
	Output Holding Time		20ms minimum (at rated input and output)					
	Starting Time		200ms maximum	–	–	–	650ms maximum	500ms maximum
	Rise Time		100ms maximum (at rated input and output)				200ms maximum	
	Line Regulation		0.4% maximum					
	Load Regulation		1.5% maximum					0.8% max
	Temperature Regulation		0.05% degree C maximum					
	Ripple Voltage		2% peak to peak maximum (including noise)				1% peak to peak maximum (including noise)	
	Overcurrent Protection		105% or more, auto reset			105 to 130%, auto reset	103 to 110%, auto reset	
	Overvoltage Protection		120% min. SHUTDOWN					
	Operation Indicator		LED (green)					
	Voltage Low Indication		LED (amber)	–	–	–	LED (amber)	

Specifications Con't

	PS5R-SB	PS5R-SC	PS5R-SD	PS5R-SE	PS5R-SF	PS5R-SG
Parallel Operation	No					
Dielectric Strength	Between Input and Ground: 2000 VAC, 1 minute*					
Insulation Resistance	Between Input & Output Terminals: 100 MΩ Min					
Operating Temperature	–10 to +65°C (14 to 149°F)	-10 to 60°C (14 to 140°F)				
Storage Temperature	-25 to 75°C (-13 to +167°F)					
Operating Humidity	20 to 90% relative humidity (no condensation)					
Vibration Resistance	Frequency 10 to 55Hz, Amplitude 0.375mm					
Shock Resistance	300m/s^2 (30G) 3 times each in 6 axes					
Approvals	EMC: EN61204-3 (EMI: Class B, EMS: Industrial), c-UL (CSA 22.2 No. 14), UL 1604, UL 508, LVD: EN60950, EN50178					
	UL1310 Class 2, c-UL (CSA 22.2 No. 213 and 223)			–	SEMI F47	
Harmonic Directive	N/A			EN61000-3-2 A14 class A		
Weight (approx.)	160g	250g	285g	440g	630g	1000g
Terminal Screw	M3.5 slotted-Phillips head screw (screw terminal type)					
IP protection	IP20 fingersafe					
Dimensions H x W x D (mm)	90 x 22.5 x 95	95 x 36 x 108		115 x 46 x 121	115 x 50 x 129	125 x 80 x 149.5
Dimensions H x W x D (inches)	3.54 x 0.89 x 3.74	3.74 x 1.42 x 4.25		4.53 x 1.81 x 4.76	4.53 x 1.97 x 5.08	4.92 x 3.15 x 5.89

* Between input and output: 3000VAC, 1 minute; Between output and ground: 500VAC, 1 minute

Dimensions

PS5R-SB

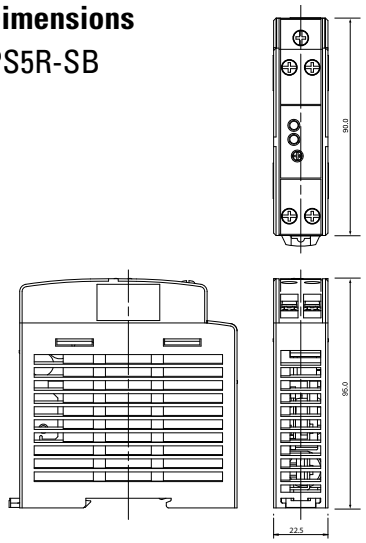

PS5R-SC
PS5R-SD

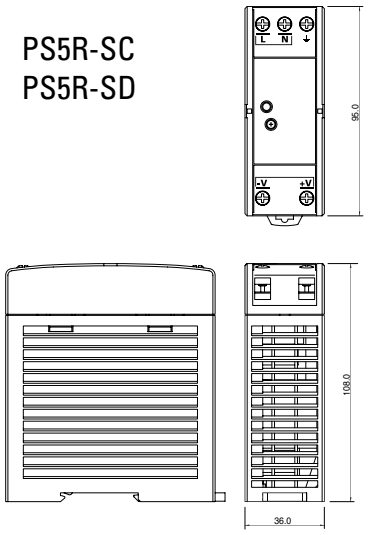

PS5R-SE

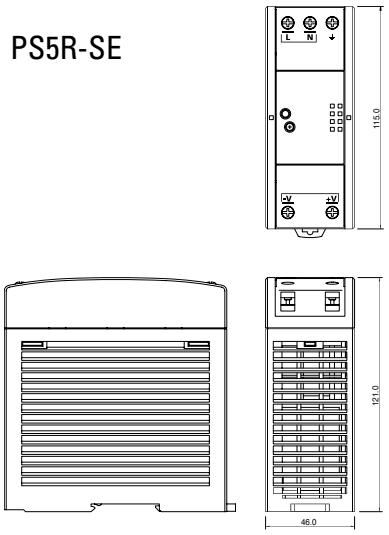

PS5R-SF

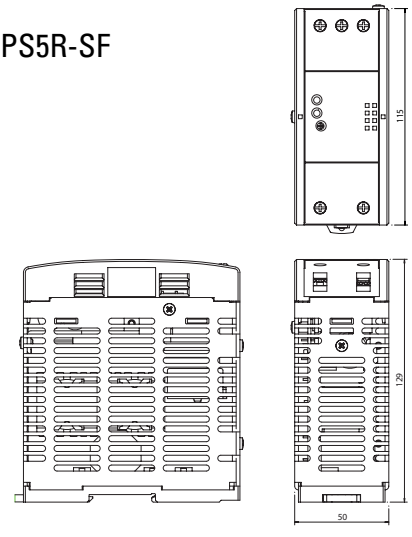

PS5R-SG

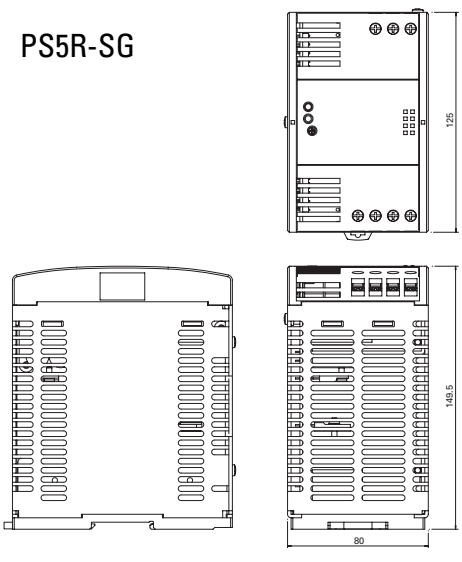

IDEC Corporation
1175 Elko Drive Sunnyvale, CA 94089
800-262-IDEC (4332) Fax: 408-745-5258
www.idec.com

©2007 IDEC Corporation. All Rights Reserved.
Catalog No. PS9Y-DS100-0 04/07 *10K*

SPECIFICATION FORM

PROJECT NAME	BY	DATE	REVISION	ICS PROJECT NO
SAND COULEE, MT	SM	08/2014	SUBMITTAL	2848

SPECIFICATION:

DEVICE: PILOT DEVICES 22MM

MANUFACTURER: IDEC

MODEL: HW1 SERIES

RANGE / SCALE: 22MM NEMA 4, 4X

INPUT:

OUTPUT:

QUANTITY:

FEATURES:

DESCRIPTION	PART NUMBER
PILOT LIGHT, RED, 120V AC, LED	HW1P-2FQD-R-120V
PILOT LIGHT, GREEN, 120V AC, LED	HW1P-2FQD-G-120V
SELECTOR SWITCH, 3-POSITION, 2NO	HW1S-3TF20

Pilot Lights (Assembled)

		Round Flush		Dome	
		Plastic Bezel	**Metal Bezel**	**Plastic Bezel**	**Metal Bezel**
Operator Only		*HW1P-1FQ0-②*	*HW4P-1FQ0-②*	*HW1P-2FQ0-②*	*HW4P-2FQ0-②*
Full Voltage		HW1P-1FQ④-②-③	HW4P-1FQ④-②-③	HW1P-2FQ④-②-③	HW4P-2FQ④-②-③
Transformer	**120V AC**	HW1P-1FH2④-②	HW4P-1FH2④-②	HW1P-2FH2④-②	HW4P-2FH2④-②
	240V AC	HW1P-1FM4④-②	HW4P-1FM4④-②	HW1P-2FM4④-②	HW4P-2FM4④-②
	480V AC	HW1P-1FT8④-②	HW4P-1FT8④-②	HW1P-2FT8④-②	HW4P-2FT8④-②
DC-DC Converter*	**110V DC**	HW1P-1D2D-②	–	HW1P-2D2D-②	–

		Square Flush
		Plastic Bezel
Operator Only		*HW2P-1FQ0-②*
Full Voltage		HW2P-1FQ④-②-③
Transformer	**120V AC**	HW2P-1FH2④-②
	240V AC	HW2P-1FM4④-②
	480V AC	HW2P-1FT8④-②
DC-DC Converter*	**110V DC**	HW2P-1D2D-②

② Lens/LED Color Code

Color	Code
Amber	A
Green	G
Red	R
Blue	S
White	W
Yellow	Y

③ Full Voltage Code

Voltage	Code
6VAC/DC	6V
12VAC/DC	12V
24VAC/DC	24V
120V AC (LED only)	120V
240V AC (LED only)	240V

④ Lamp Type Code

Lamp	Code
Incandescent	Blank
LED	D

1. In place of ②, specify the Lens/LED Color Code from table below.
2. In place of ③specify the Full Voltage Code from table below.
3. In place of ④ specify Lamp Type Code from table below.
4. *DC-DC convertor voltage input from 90-140V DC, comes with spring-up terminals only.
5. DC-DC converter models with LED lamps only.
6. For nameplates and accessories, see page 546 and 549.
7. For dimensions, see page 551.
8. **Pilot lights do not come with anti-rotation ring.**
9. Operator models come with operator and lens.
10. **Yellow pilot light comes with white LED.**

SPECIFICATION FORM

PROJECT NAME	BY	DATE	REVISION	ICS PROJECT NO
SAND COULEE, MT	SM	08/2014	SUBMITTAL	2848

SPECIFICATION:

DEVICE: ELAPSED TIME METERS

MANUFACTURER: REDINGTON

MODEL: MODEL 722

RANGE / SCALE: FLUSH

INPUT: 120 VAC

OUTPUT: 6 DIGIT WITH 1/10 HR NON-RESET

QUANTITY: 4

FEATURES: NEMA 4X, 12 RATED WITH GASKET

DESCRIPTION	PART NUMBER
ROUND	722-0004

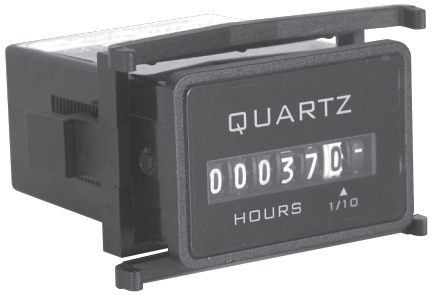

Description

The Redington Model 722 provides an AC Hour Meter with an operating range of 90-264VAC 50/60 Hz. You no longer require two separate meters, one for 115VAC and one for 230VAC. Models are available in the standard industry housings, 2-Hole Rectangular, Flush-Rectangular, Flush-Round and 3-Hole Round. Its quartz time base insures accurate long-term time keeping. The Totally Sealed case protects against the environment and provides years of reliable service. All models are NEMA 4X,12 rated when mounted with optional gasket.

Features

- Operating voltage 90-264VAC 50/60Hz
- Totally Sealed
- UL/cUL Recognized, CE & RoHS Compliant
- 6 Figure, 99999.9
- Quartz accuracy

Options

- Wire leads
- Gasket kit (for NEMA 4X, 12 rating)
- Custom lens
- Terminals up, down, straight

Specifications

Figures:	6 - digits, 0.14" [3.6mm] 99999.9 Hours and idicator - white on black Decimal - black on white
Reset:	Non-reset
Voltage:	90-264VAC
Frequency:	50/60Hz
Power:	1 watt max.
Mounting:	Clip or mounting holes
Termination:	¼" [6.3mm] spade terminals
Weight:	~2 oz [57 g]
Accuracy:	± 0.02% over entire range

Case Material:	Black polymer
Lens Material:	Polymer
Agency Approvals:	UL/cUL Recognized, CE & RoHS Compliant, SAE & NEMA 4X, 12 Compliant
Environmental:	Totally Sealed
Front Panel:	NEMA 4X, 12 rated with optional gasket
Temperature:	-40°F to +185°F [-40°C to + 85°C]
Humidity:	95% (SAE J1378)
Vibration:	10-80 Hz. 20g max. (SAE J1378)
Shock:	55g @ 9 - 13msec (SAE J1378)

Models	Description
722-0001	2-Hole Rectangular, 90-264VAC 50/60Hz, ¼" [6.3mm] spade terminals, hours & 1/10's
722-0002	Flush-Rectangular, 90-264VAC 50/60Hz, ¼" [6.3mm] spade terminals, hours & 1/10's
722-0003	Flush-Round, 90-264VAC 50/60Hz, ¼" [6.3mm] spade terminals, hours & 1/10's
722-0004	3-Hole Round, 90-264VAC 50/60Hz, ¼" [6.3mm] spade terminals, hours & 1/10's
5003-009	NEMA 4X, 12 Gasket for Model 722-0002
5003-010	NEMA 4X, 12 Gasket for Model 722-0001
5003-011	NEMA 4X, 12 Gasket for Model 722-0004
5003-008	NEMA 4X, 12 Gasket for Model 722-0003

* All items are normally in factory stock

Dimensions

2-Hole

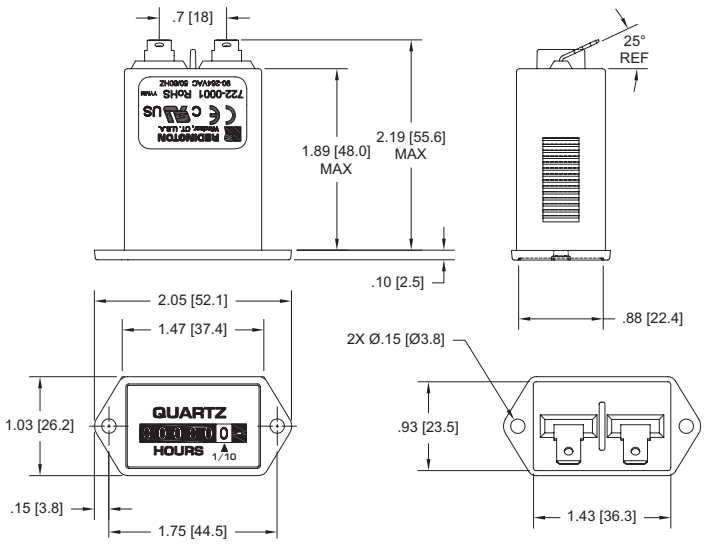

Panel Opening: 1.45” X 0.95” [36.8 X 24.1]

Flush-Rectangular

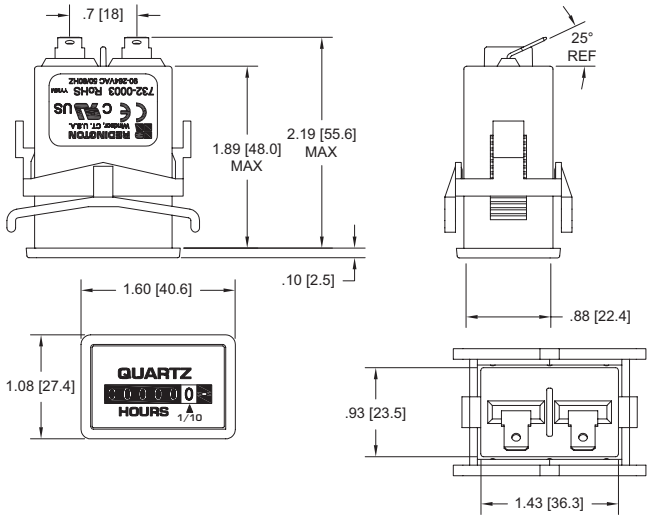

Panel Opening: 1.45” X 0.95” [36.8 X 24.1]
Panel Thickness: 0.03 to 0.63 [0.76 to 16.00]

Flush-Round

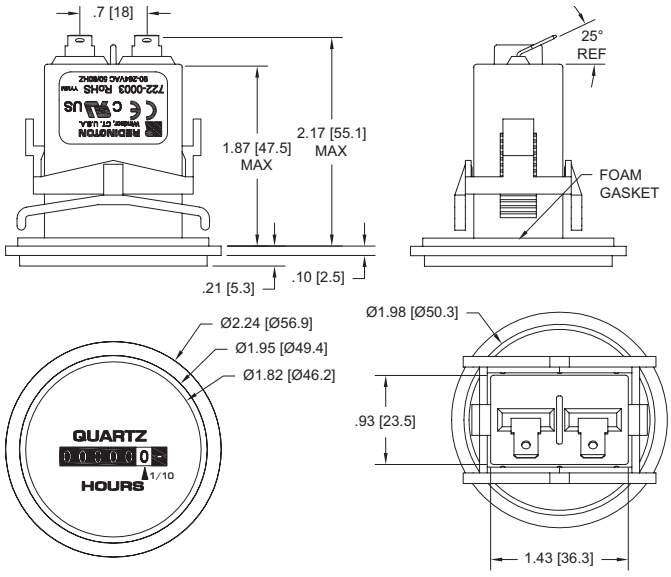

Panel Opening: 2.0” [50.6]
Panel Thickness: 0.40 [10.2] Max.

3-Hole Round

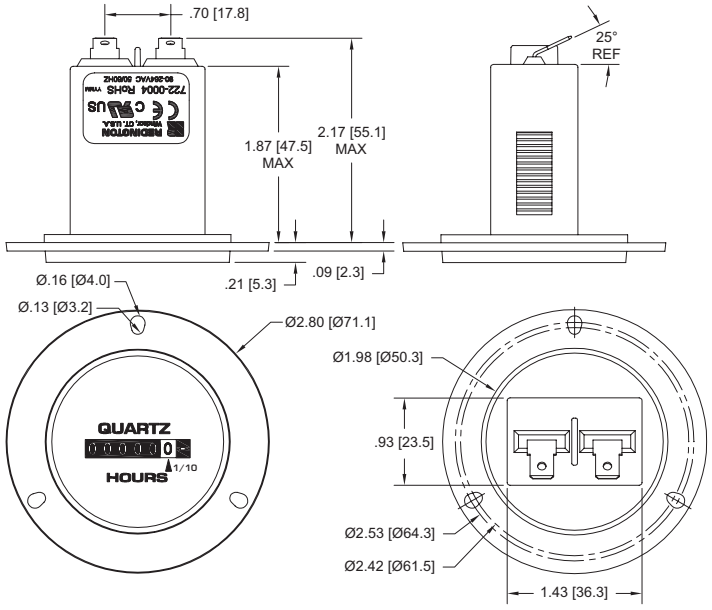

Panel Opening: 2.0” [50.6]

Applications

Medical Equipment

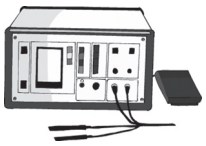

Control Panels

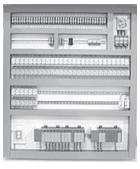

Test Equipment

Generators

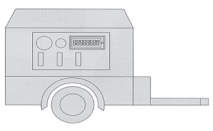

Office Equipment

SPECIFICATION FORM

PROJECT NAME	BY	DATE	REVISION	ICS PROJECT NO
SAND COULEE, MT	SM	08/2014	SUBMITTAL	2848

SPECIFICATION:

DEVICE: TERMINAL BLOCKS

MANUFACTURER: PHOENIX CONTACT

MODEL: UT 4

RANGE / SCALE: 600V 30A

INPUT: N/A

OUTPUT:

QUANTITY: 1

FEATURES:

DESCRIPTION	PART NUMBER
TERMINAL BLOCK GREY	3044102

Extract from the online catalog

UT 4

Order No.: 3044102

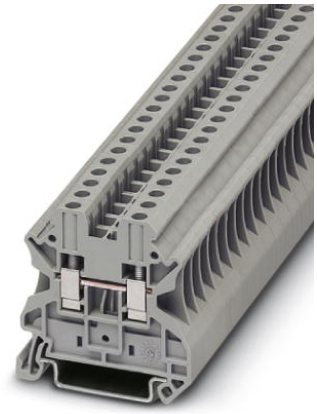

http://eshop.phoenixcontact.de/phoenix/treeViewClick.do?UID=3044102

Feed-through modular terminal block, Type of connection: Screw connection, Screw connection, Cross section: 0.14 mm² - 6 mm², AWG 26 - 10, Width: 6.2 mm, Color: gray, Mounting type: NS 35/7,5, NS 35/15

Product notes

WEEE/RoHS-compliant since: 01/01/2003

http://www.download.phoenixcontact.com
Please note that the data given here has been taken from the online catalog. For comprehensive information and data, please refer to the user documentation. The General Terms and Conditions of Use apply to Internet downloads.

Commercial data	
EAN	4017918960391
Pack	50 Pcs.
Customs tariff	85369010
Weight/Piece	0.00946 KG
Catalog page information	Page 27 (CL-2007)

Technical data

General

Number of levels	1
Number of connections	2
Color	gray

Insulating material	PA
Inflammability class acc. to UL 94	V0

Dimensions

Width	6.2 mm
Length	47.7 mm
Height NS 35/7,5	47.5 mm
Height NS 35/15	55 mm

Technical data

Maximum load current	41 A (with 6 mm^2 conductor cross section)
Rated surge voltage	8 kV
Pollution degree	3
Surge voltage category	III
Insulating material group	I
Connection in acc. with standard	IEC 60947-7-1
Nominal current I_N	32 A (with 4 mm^2 conductor cross section)
Nominal voltage U_N	1000 V
Open side panel	ja

Connection data

Conductor cross section solid min.	0.14 mm²
Conductor cross section solid max.	6 mm²
Conductor cross section stranded min.	0.14 mm²
Conductor cross section stranded max.	6 mm²
Conductor cross section AWG/kcmil min.	26
Conductor cross section AWG/kcmil max	10
Conductor cross section stranded, with ferrule without plastic sleeve min.	0.25 mm²
Conductor cross section stranded, with ferrule without plastic sleeve max.	4 mm²
Conductor cross section stranded, with ferrule with plastic sleeve min.	0.25 mm²
Conductor cross section stranded, with ferrule with plastic sleeve max.	4 mm²
2 conductors with same cross section, solid min.	0.14 mm²
2 conductors with same cross section, solid max.	1.5 mm²

2 conductors with same cross section, stranded min.	0.14 mm²
2 conductors with same cross section, stranded max.	1.5 mm²
2 conductors with same cross section, stranded, TWIN ferrules with plastic sleeve, min.	0.5 mm²
2 conductors with same cross section, stranded, TWIN ferrules with plastic sleeve, max.	2.5 mm²
2 conductors with same cross section, stranded, ferrules without plastic sleeve, min.	0.25 mm²
2 conductors with same cross section, stranded, ferrules without plastic sleeve, max.	1.5 mm²
Type of connection	Screw connection
Stripping length	9 mm
Internal cylindrical gage	A4
Screw thread	M3
Tightening torque, min	0.6 Nm
Tightening torque max	0.8 Nm

Certificates / Approvals

Certification	CB, CSA, CUL, DNV, GL, LR, UL, VDE-PZI
Certification Ex:	IECEx, KEMA-EX

CSA

Nominal voltage U_N	600 V
Nominal current I_N	30 A
AWG/kcmil	26-10

CUL

Nominal voltage U_N	600 V
Nominal current I_N	30 A
AWG/kcmil	26-10

UL

Nominal voltage U_N	600 V

Nominal current I_N	30 A
AWG/kcmil	26-10

Accessories

Item	Designation	Description
Assembly		
3047167	ATP-UT	Partition plate, Length: 50 mm, Width: 2 mm, Height: 48 mm, Color: gray
3047028	D-UT 2,5/10	End cover for modular terminal blocks, Length: 47.7 mm, Width: 2.2 mm, Height: 48.4 mm, Color: gray
0801762	NS 35/ 7,5 CU UNPERF 2000MM	DIN rail, material: Copper, unperforated, height 7.5 mm, width 35 mm, length: 2 m
1207640	NS 35/ 7,5 PERF 755MM	NS 35 DIN rail, height 7.5 mm, length 755 mm
1207653	NS 35/ 7,5 PERF 955MM	NS35 DIN rail, height 7.5 mm, length 955 mm
1207666	NS 35/ 7,5 PERF 1155MM	NS 35 DIN rail, height 7.5 mm, length 1155 mm
0801733	NS 35/ 7,5 PERF 2000MM	DIN mounting rail, material: Steel, galvanized and passivated with a thick layer, perforated, height 7.5 mm, width 35 mm, length: 2 m
0801681	NS 35/ 7,5 UNPERF 2000MM	DIN rail, material: Steel, unperforated, height 7.5 mm, width 35 mm, length: 2 m
1201756	NS 35/15 AL UNPERF 2000MM	DIN rail, deep-drawn, high profile, unperforated, 1.5 mm thick, material: Aluminum, height 15 mm, width 35 mm, length 2 m
1201895	NS 35/15 CU UNPERF 2000MM	DIN rail, material: Copper, unperforated, 1.5 mm thick, height 15 mm, width 35 mm, length: 2 m
1207679	NS 35/15 PERF 755MM	NS 35 DIN rail, perforated, height 15 mm, length 755 mm
1207682	NS 35/15 PERF 955MM	NS 35 DIN rail, perforated, height 15 mm, length 955 mm
1207695	NS 35/15 PERF 1155MM	NS 35 DIN rail, perforated, height 15 mm, length 1155 mm
1201730	NS 35/15 PERF 2000MM	DIN rail, material: Steel, perforated, height 15 mm, width 35 mm, length: 2 m
1201714	NS 35/15 UNPERF 2000MM	DIN rail, material: Steel, unperforated, height 15 mm, width 35 mm, length: 2 m
1201798	NS 35/15-2,3 UNPERF 2000MM	DIN rail, material: Steel, unperforated, 2.3 mm thick, height 15 mm, width 35 mm, length: 2 m
Bridges		
3030336	FBS 2-6	Cross connector/jumper for modular terminal block, Number of positions: 2, Color: red
3030242	FBS 3-6	Cross connector/jumper for modular terminal block, Number of positions: 3, Color: red
3030255	FBS 4-6	Cross connector/jumper for modular terminal block, Number of positions: 4, Color: red

3030349	FBS 5-6	Cross connector/jumper for modular terminal block, Number of positions: 5, Color: red
3030271	FBS 10-6	Cross connector/jumper for modular terminal block, Number of positions: 10, Color: red
3030365	FBS 20-6	Cross connector/jumper for modular terminal block, Number of positions: 20, Color: red
3032224	FBS 50-6	Cross connector/jumper for modular terminal block, Number of positions: 50, Color: red

General

3022276	CLIPFIX 35-5	Snap-on end bracket, for NS 35/7.5 or NS 35/15 DIN rail, can be fitted with Zack strip ZB 5 and ZBF 5, terminal strip marker KLM 2 and KLM, parking facility for FBS...5, FBS...6, KSS 5, KSS 6, width: 5,15 mm, color: gray

Marking

0811228	X-PEN 0,35	Marker pen without ink cartridge, for manual labeling of markers, labeling extremely wipe-proof, line thickness 0.35 mm
1051016	ZB 6,LGS:FORTL.ZAHLEN	Zack strip, 10-section, printed horizontally: with the numbers, 1-10, 11-20 etc. up to 991-1000, color: white
5060935	ZB 6/WH-100:UNBEDRUCKT	Zack strip, unprinted: For individual labeling with M-PEN, ZB-T or CMS system, large batch, sufficient for labeling 1000 terminal blocks, for a terminal width of 6.2 mm, color: White
1050499	ZB 6:SO/CMS	Zack strip, 10-section, divisible, special printing, marking according to customer requirements

Plug/Adapter

0201689	MPS-IH BU	Insulating sleeve, for MPS metal part, Color: blue
0201676	MPS-IH RD	Insulating sleeve, for MPS metal part, Color: red
0201663	MPS-IH WH	Insulating sleeve, for MPS metal part, Color: white
0201744	MPS-MT	Metal part for test connector
3030925	PAI-4	Test adapter, Color: gray
3030996	PS-6	Test adapter, Color: red

Tools

1205053	SZS 0,6X3,5	Screwdriver, bladed, matches all screw terminal blocks up to 4.0 mm² connection cross section, blade: 0.6 x 3.5 mm, without VDE approval

Address

PHOENIX CONTACT GmbH & Co. KG
Flachsmarktstr. 8
32825 Blomberg,Germany
Phone +49 5235 3 00
Fax +49 5235 3 41200
http://www.phoenixcontact.com

© 2008 Phoenix Contact
Technical modifications reserved;

water and wastewater control solutions
Instrument Control Systems ICS HEALY-RUFF
csia CERTIFIED
13005 16TH AVE. NORTH • SUITE 100 • PLYMOUTH MN 55441
PHONE: (763) 559-0568 • FAX: (763) 559-2187
www.icshealyruff.com

ENGINEERING • INSTALLATION • SERVICE

TAB 2

SPECIFICATION FORM

PROJECT NAME	BY	DATE	REVISION	ICS PROJECT NO
SAND COULEE, MT	SM	08/2014	SUBMITTAL	2848

SPECIFICATION:

DEVICE: SURGE PROTECTOR--THREE PHASE

MANUFACTURER: SQUARE D

MODEL: SDSA3650

RANGE / SCALE: 40KA

INPUT: 0-600 VOLTS, 3 PHASE

OUTPUT: N/A

QUANTITY:

FEATURES: BRACKET MOUNTED

SURGE PROTECTOR SDSA3650

SDSA3650 Surge Protective Device (SPD)
Dispositivo de protección contra sobretensiones transitorias (SPD) SDSA3650
Dispositif de protection contre les surtensions transitoires (SPD) SDSA3650

Series Serie Série	Type Tipo Type
002	1

Retain for future use. / Conservar para uso futuro. / À conserver pour usage ultérieur.

Introduction

The SDSA3650 Surge Protective Device is designed and listed for indoor or outdoor installations and for surge suppression of three-phase services up to 600 Vac.

Introducción

El dispositivo de protección contra sobretensiones transitorias SDSA3650 está diseñado y certificado para instalaciones en interiores o en exteriores y para proporcionar supresión de sobretensiones a acometidas de tres fases de hasta 600 V~.

Introduction

Le dispositif de protection contre les surtensions transitoires SDSA3650 est conçu et homologué pour une installation à l'intérieur ou à l'extérieur et pour la suppression des surtensions de branchements tripolaires jusqu'à 600 Vca.

Precautions

Precauciones

Précautions

⚠ DANGER / PELIGRO / DANGER

HAZARD OF ELECTRIC SHOCK, EXPLOSION, OR ARC FLASH

- Apply appropriate personal protective equipment (PPE) and follow safe electrical work practices. See NFPA 70E.
- This equipment must only be installed and serviced by qualified electrical personnel.
- Turn off all power supplying this equipment before working on or inside equipment.
- Always use a properly rated voltage sensing device to confirm power is off.
- Replace all devices, doors and covers before turning on power to this equipment.
- This equipment must be effectively grounded per all applicable codes. Use an equipment-grounding conductor to connect this equipment to the power system ground.

Failure to follow these instructions will result in death or serious injury.

PELIGRO DE DESCARGA ELÉCTRICA, EXPLOSIÓN O DESTELLO POR ARQUEO

- Utilice equipo de protección personal (EPP) apropiado y siga las prácticas de seguridad en trabajos eléctricos establecidas por su Compañía, consulte la norma 70E de NFPA y NOM-029-STPS.
- Solamente el personal eléctrico especializado deberá instalar y prestar servicio de mantenimiento a este equipo.
- Desenergice el equipo antes de realizar cualquier trabajo dentro o fuera de él.
- Siempre utilice un dispositivo detector de tensión nominal adecuado para confirmar la desenergización del equipo.
- Vuelva a colocar todos los dispositivos, las puertas y las cubiertas antes de volver a energizar el equipo.
- Este equipo deberá estar correctamente conectado a tierra de acuerdo con los códigos aplicables. Utilice un conductor de conexión a tierra del equipo para conectar este último a la tierra del sistema de alimentación.

El incumplimiento de estas instrucciones podrá causar la muerte o lesiones serias.

RISQUE D'ÉLECTROCUTION, D'EXPLOSION OU D'ÉCLAIR D'ARC

- Portez un équipement de protection personnelle (ÉPP) approprié et observez les méthodes de travail électrique sécuritaire. Voir NFPA 70E.
- Seul un personnel qualifié doit effectuer l'installation et l'entretien de cet appareil.
- Coupez toutes les alimentations de l'appareil avant d'y travailler.
- Utilisez toujours un dispositif de détection de tension à valeur nominale appropriée pour vous assurer que l'alimentation est coupée.
- Replacez tous les dispositifs, les portes et les couvercles avant de mettre l'appareil sous tension.
- Cet appareil doit être effectivement mis à la terre selon tous les codes en vigueur. Utilisez un conducteur de m.à.l.t. d'appareil pour raccorder celui-ci à la terre du système d'alimentation.

Si ces directives ne sont pas respectées, cela entraînera la mort ou des blessures graves.

CAUTION / PRECAUCIÓN / ATTENTION

LOSS OF SURGE SUPPRESSION	PÉRDIDA DE SUPRESIÓN DE SOBRETENSIONES TRANSITORIAS	PERTE DE LA SUPPRESSION DES SURTENSIONS TRANSITOIRES
Turn off all power supplying the equipment and isolate the Surge Protective Device before Megger® or hi-potential testing.	Desenergice el equipo y aísle el dispositivo de protección contra sobretensiones transitorias antes de realizar cualquier prueba de rigidez dieléctrica o con Megger®.	Coupez toute alimentation de cet appareil et isolez le dispositif de protection contre les surtensions transitoires avant de procéder à l'essai de rupture diélectrique ou avec Megger®.
Failure to follow these instructions can result in equipment damage.	**El incumplimiento de estas instrucciones puede causar daño al equipo.**	**Si ces directives ne sont pas respectées, cela peut entraîner des dommages matériels.**

Table / Tabla / Tableau 1 : General Specifications / Especificaciones generales / Spécifications générales [1] [2]

Product Catalog No. / No. de catálogo del producto / Nº de catalogue de produit	SDSA3650 (Wye) SDSA3650D (Delta)
System Voltage (U_o) / Tensión del sistema (U_o) / Tension du système (U_o)	Wye: 208Y/120 V, 380Y/220 V, 400Y/230 V, 480Y/277 V, 600Y/347 V Delta: 240 V, 480 V, 600 V, 240/120 V High-Leg Delta / extremo alto de una instalación en delta / sommet du triangle
Maximum Continuous Operating Voltage (MCOV), (U_c) / Tensión máxima de funcionamiento continuo (MCOV), (U_c) / Tension de fonctionnement continu maximale (MCOV), (U_c)	(Wye): L-N 750 V, L-L 1500 V (Delta): L-L 1500 V
Short Circuit Current Rating (SCCR) / Corriente nominal de cortocircuito (SCCR) / Courant nominal de court-circuit (SCCR)	200 kA
Nominal Discharge Current (I_n) / Corriente nominal de descarga (I_n) / Courant nominal de décharge (I_n)	10 kA
Voltage Protection Rating (VPR), (U_p) / Nivel de protección en tensión (VPR), (U_p) / Niveau de protection en tension (VPR), (U_p)	(Wye): L-N 2500 V, L-L 4000 V (Delta): L-L 4000 V
Enclosure Rating (IP Code) / Clasificación del gabinete (código IP) / Valeur nominale du coffret (code IP)	Type 4X (IP66) / Tipo 4X (IP66) / Type 4X (IP66)
Max Surge Current / Corriente transitoria máx. / Courant max. de surtension	40 kA/Phase / 40 kA/fase / 40 kA/phase
Housing Dimensions / Dimensiones de la caja / Dimensions du coffret	See Figure 4 / Vea la figura 4 / Voir la figure 4
Product Weight / Peso del producto / Poids du produit	1 lb (0.45 kg) / 0,45 kg (1 lb) / 0,45 kg (1 lb)
Connection Method / Método de conexión / Méthode de raccordement	Parallel, 12 AWG Wire / Conductor sólido calibre 3,31 mm^2 (12 AWG), paralelo / En parallèle, fil rigide de calibre 12 AWG
Thermal Fusing / Fusión térmica / Fusibles thermiques	Yes / Si / Oui
Operating Temperature / Temperatura de funcionamiento / Température de fonctionnement	-40 °F to +160 °F (-40 °C to +70 °C) / -40 °C a +70 °C (-40 °F a +160 °F) / -40 °C a +70 °C (-40 °F a +160 °F)
Operating Frequency / Frecuencia de funcionamiento / Fréquence de fonctionnement	50/60 Hz
Diagnostics / Diagnóstico / Diagnostics	Green Status LEDs / LED de estado verde / DÉL d'état verte
Product Standards / Normas del producto / Normes du produit	UL 1449 3rd Edition, rev. May 2010, C233.1-87, EN61643-11 / UL 1449 3ra edición, rev. mayo 2010, C233.1-87, EN61643-11 / UL 1449 3ème édition, rev. Mai 2010, C233.1-87, EN61643-11
Product Rating / Clasificación del producto / Valuer nominale du produit	Type 1 Surge Protective Device (SPD), (Test Class 1) / Dispositivo de protección contra sobretensiones transitorias tipo 1, (clase de prueba 1) / Dispositif de protection contre les surtensions transitoires type1, (classe d'essai 1)

[1] Contains no serviceable parts / Contiene piezas libres de mantenimiento / Ne contient aucune pièce à réparer ou entretenir

[2] Suitable for use on a circuit capable of delivering not more than 200 kA rms symmetrical Amperes. / Se puede usar en un circuito capaz de suministrar no más de 200 kA simétricos rcm. / Convient à un circuit capable de fournir pas plus de 200 kA RMS symétriques.

© 2010 Schneider Electric All Rights Reserved / Reservados todos los derechos / Tous droits réservés

Installation

1. Turn off all power supplying this equipment before working on or inside equipment.
2. For mounting, see Figure 1.
3. Confirm SPD is rated for your system by comparing voltage measurements to the Line Voltage (L-L, L-N) on the product label (see Figure 2).
4. Confirm the black wires are connected to the line wires and the neutral wire is connected to the white wire (see Figure 2).
   NOTE: Delta model SDSA3650D does not include or require a white wire.
5. Twist wires 1/2 turn every 12 in. (30 cm) of length.
6. Keep conductor length as short as possible with no sharp bends.
7. Do not loop or coil wires.
8. Install cover and/or close door on equipment.

Instalación

1. Desenergice el equipo antes de realizar cualquier trabajo dentro o fuera de él.
2. Para obtener detalles de montaje, vea la figura 1.
3. Asegúrese de que el SPD sea adecuado para su sistema comparando las mediciones de tensión en la tensión de línea (L-L, L-N), especificadas en la etiqueta del producto.
4. Asegúrese de que los conductores negros estén conectados a los conductores de línea y el conductor blanco al conductor neutro (vea la figura 2).
   NOTA: El modelo SDSA3650D en delta no incluye ni requiere conductor blanco.
5. Tuerza los conductores ½ vuelta o más por cada 305 mm (12 pulgadas) de longitud.
6. Mantenga la longitud de los conductores lo más corta posible evitando doblarlos en ángulo recto.
7. No haga bucles o enrolle los cables.
8. Instale la cubierta y/o cierre la puerta del equipo.

Installation

1. Couper toutes les alimentations de l'appareil avant d'y travailler.
2. Pour le montage voir la figure 1.
3. S'assurer que le SPD est de la valeur nominale convenant à votre système en comparant les mesures de tension à la tension de ligne (L-L, L-N) sur l'étiquette du produit.
4. S'assurer que les fils noirs sont raccordés aux fils de ligne et que le fil blanc est raccordé au fil du neutre (voir la figure 2).
   REMARQUE : Le modèle SDSA3650D en triangle (delta) n'inclut pas ou n'exige pas un fil blanc.
5. Torsader les conducteurs de 1/2 tour ou plus par 305 mm (12 po) de longueur.
6. Maintenir la longueur des conducteurs aussi courte que possible et sans courbures accentuées.
7. Ne pas faire de boucles et ne pas enrouler les fils.
8. Installer le couvercle ou fermer la porte de l'appareil.

Figure / Figura / Figure 1 : Mounting and Wiring / Montaje y alambrado / Montage et câblage

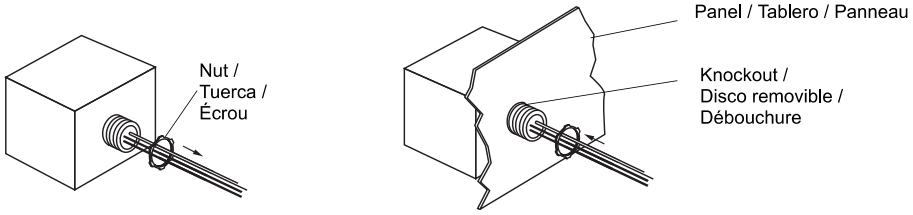

Figure / Figura / Figure 2 : Wiring / Alambrado / Câblage

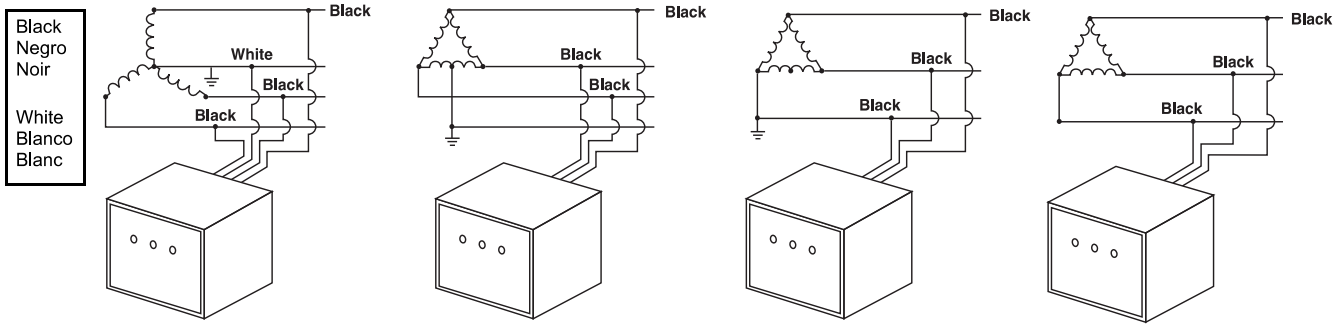

3-phase 4-wire 208Y/120 Vac or 480Y/277 Vac or 600Y/347 Vac

3 fases, 4 hilos de 208Y/120 V~ (ca) o 480Y/277 V~ (ca) 600/347 V~ (ca)

Triphasé à 4-fils de 208Y/120 Vca ou 480Y/277 Vca, ou 600Y/347 Vca

3-phase 3-wire 240/120 Vac High-Leg Delta

3 fases, 3 hilos de 240/120 V~ (ca) extremo alto de una instalación en delta

Triphasé à 3-fils 240/120 Vca sommet du triangle

3-phase 3-wire (corner grounded) 240 Vac or 480 Vac or 600 Vac

3 fases, 3 hilos (puesto a tierra en esquina) de 240 V~ (ca) o 480 V~ (ca) 600 V~ (ca)

Triphasé à 3-fils (mis à la terre par le coin) 240 Vca ou 480 Vca ou 600 Vca

3-phase 3-wire (ungrounded) 240 Vac or 480 Vac or 600 Vac

3 fases, 3 hilos (sin conexión a tierra) de 240 V~ (ca) o 480 V~ (ca) 600 V~ (ca)

Triphasé à 3-fils (non mis à la terre) 240 Vca ou 480 Vca ou 600 Vca

© 2010 Schneider Electric All Rights Reserved / Reservados todos los derechos / Tous droits réservés

For troubleshooting, call the Surgelogic Technical Assistance Group at 1-800-577-7353.

Figure / Figura / Figure 3 : Diagnostic Operation / Diagnóstico del funcionamiento del equipo / Diagnostic de fonctionnement

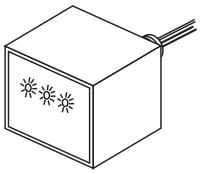

LED ON = OK /
LED ENCENDIDO = funcionamiento normal /
DÉL ALLUMÉE = OK

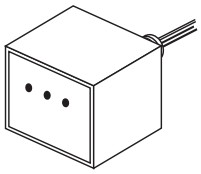

LED OFF = Fault /
LED APAGADO = falla /
DÉL ÉTEINTE = Défaut /

- **LED ON** = Normal Operation
- **LED OFF** = Check circuit breakers and connections. Verify line voltage at point of connection; if all correct, replace unit.

- **LED ENCENDIDO** = funcionamiento normal
- **LED APAGADO** = Revise los interruptores automáticos y las conexiones. Verifique la tensión de línea en el punto de conexión; si todo se encuentra en órden, sustituya el SPD.

- **DÉL ALLUMÉE** = Fonctionnement normal
- **DÉL ÉTEINTE** = Vérifier les disjoncteurs et les raccordements. Vérifier la tension de ligne au point de raccordement; si tout est correct, remplacer le SPD.

Dimensions

Dimensiones

Dimensions

Figure / Figura / Figure 4 : Dimensions / Dimensiones / Dimensions

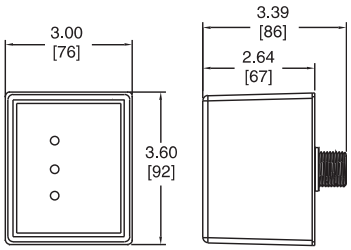

in. / pulg / po
[mm]

NOTE: Knockout trade size is 0.5 in. (13 mm). Actual hole size is 0.875 in. (22 mm).

NOTA: El tamaño estándar del disco desprendible es de 13 mm (0,5 pulg). El tamaño real del agujero es de 22 mm (0,875 pulg).

REMARQUE: La taille commerciale des débouchures est de 13 mm (0,5 po). Taille réelle du trou : 22 mm [0,875 po].

Square D® is a trademark or registered trademark of Schneider Electric. Other trademarks used herein are the property of their respective owners.

Square D® es una marca comercial o marca registrada de Schneider Electric. Cualquier otra marca comercial utilizada en este documento pertenece a sus respectivos propietarios.

Square D® est une marque commerciale ou marque déposée de Schneider Electric. Toutes autres marques commerciales utilisées dans ce document sont la propriété de leurs propriétaires respectifs.

Electrical equipment should be installed, operated, serviced, and maintained only by qualified personnel. No responsibility is assumed by Schneider Electric for any consequences arising out of the use of this material.

Solamente el personal especializado deberá instalar, hacer funcionar y prestar servicios de mantenimiento al equipo eléctrico. Schneider Electric no asume responsabilidad alguna por las consecuencias emergentes de la utilización de este material.

Seul un personnel qualifié doit effectuer l'installation, l'utilisation, l'entretien et la maintenance du matériel électrique. Schneider Electric n'assume aucune responsabilité des conséquences éventuelles découlant de l'utilisation de cette documentation.

Schneider Electric USA, Inc.
1751 S. 4800 W.
Salt Lake City, UT 84104 USA
1-888-SquareD (1-888-778-2733)
www.schneider-electric.us

Importado en México por:
Schneider Electric México, S.A. de C.V.
Calz. J. Rojo Gómez 1121-A
Col. Gpe. del Moral 09300 México, D.F.
Tel. 55-5804-5000
www.schneider-electric.com.mx

Schneider Electric Canada, Inc.
19 Waterman Avenue
Toronto, Ontario M4B 1Y2
1-800-565-6699
www.schneider-electric.ca

© 2010 Schneider Electric All Rights Reserved / Reservados todos los derechos / Tous droits réservés

For troubleshooting, call the Surgelogic Technical Assistance Group at 1-800-577-7353.

SPECIFICATION FORM

PROJECT NAME	BY	DATE	REVISION	ICS PROJECT NO
SAND COULEE, MT	SM	08/2014	SUBMITTAL	2848

SPECIFICATION:

DEVICE: PHASE LOSS UNDER VOLTAGE MONITOR/RELAY

MANUFACTURER: SYMCOM

MODEL: 460

RANGE / SCALE: 480V 3PH

INPUT: 190-480VAC, 3 PHASE

OUTPUT: CONTACT SPDT

QUANTITY:

FEATURES:

PHASE LOSS UNDER VOLTAGE MONITOR/RELAY 460

Features

Universal range from 95-120 or 190-240VAC, 50/60 Hz provides the versatility needed to handle global applications.

Two adjustment pots provide versatility for all kinds of applications.

Diagnostic LEDs indicate trip status and provide simple troubleshooting.

Microcontroller-based circuitry provides better accuracy and higher reliability than analog designs.

Transient protection meets IEEE and IEC standards to allow operation under tough conditions.

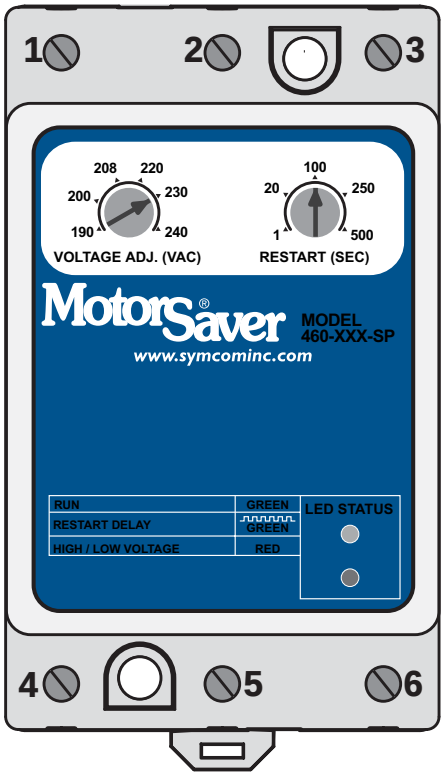

MotorSaver®
THREE-PHASE ELECTRIC MOTOR PROTECTOR

Model 460-XXX-SP

Single-Phase Voltage Monitor

•

Engineered Protection

•

Microcontroller Based

The **Model 460-XXX-SP** protects single-phase motors from damage caused by low and high voltage and rapid cycling. Controls are provided to set the nominal voltage (190-240VAC) and the desired restart delay time (1-500 sec.).

A unique microcontroller-based, voltage-sensing circuit constantly monitors the voltage to detect harmful power line conditions. When a harmful condition is detected, the MotorSaver's output relay is deactivated after a specified trip delay. The output relay reactivates after power line conditions return to an acceptable level for a specified amount of time (restart delay). The restart delay is also a power-up delay and can be utilized to stagger-start motors on the same system. The trip delay prevents nuisance tripping due to rapidly fluctuating power line conditions.

Protects Single-Phase Motors From:

- Low voltage
- High voltage
- Rapid cycling

Additional Features:

- Compact design
- Standard 1-500 sec. variable restart delay
- Standard surface or DIN rail mountable
- Finger-safe terminals
- One 10 Amp general purpose Form C relay
- Optional manual reset
- UL and cUL listed
- CE compliant
- 5-year warranty
- Made in USA

SymCom Inc
Motor Protection & Controls Since 1974

2880 North Plaza Drive • Rapid City, SD 57702
(800) 843-8848 • (605) 348-5580 • FAX (605) 348-5685
www.symcominc.com • email: sales@symcominc.com

10/05

MotorSaver®
THREE-PHASE ELECTRIC MOTOR PROTECTOR

Specifications
•
Operating Points
•
Special Options

Model 460-XXX-SP
Single-Phase Voltage Monitor

Specifications

Single-Phase Line Voltage
460-100-SP 95-120VAC
460-200-SP 190-240VAC
Frequency .....50*/60 Hz
Low Voltage (% of setpoint)
•Trip .....90% ±1%
•Reset.....93% ±1%
High Voltage (% of setpoint)
•Trip .....110% ±1%
•Reset.....107% ±1%
Trip Delay Time
•Low or High Voltage .....4 seconds
Restart Delay Time
•After a Fault .....1-500 seconds adjustable
•After a Complete Power Loss .....1-500 seconds adjustable
Output Contact Rating
•1-Form C.....10 A General Purpose @ 240VAC
Pilot Duty 480VA @ 240VAC, B300
Power Consumption .....6 Watts (max.)
Weight .....14 oz.
Enclosure .....Polycarbonate
Terminal Torque .....6 in.-lbs.
Wire Type.....Stranded or solid 12-20 AWG, one per terminal
Safety Marks
•UL UL508
•CE .....IEC 60947-6-2
Standards Passed
•Electrostatic Discharge (ESD) .....IEC 1000-4-2, Level 3, 6kV contact, 8kV air
•Radio Frequency Immunity, Radiated....150 MHz, 10V/m
•Fast Transient Burst .....IEC 1000-4-4, Level 3, 3.5 kV input power & controls
Surge
•IEC .....IEC 1000-4-5, Level 3, 4kV line-to-line;
Level 4, 4kV line-to-ground
•ANSI/IEEE .....C62.41 Surge and Ring Wave Compliance
to a level of 6kV line-to-line
•Hi-potential Test .....Meets UL508 (2 x rated V +1000V for 1 minute)

Environmental
Temperature Range .....Ambient Operating: -20° to 70° C (-4° to 158°F)
Ambient Storage: -40° to 80° C (-40° to 176°F)
Class of Protection.....IP20, NEMA 1 (finger safe)
Relative Humidity .....10-95%, non-condensing per IEC 68-2-3
Special Options
Manual Reset.....External momentary pushbutton required.

*Note: 50 Hz will increase all delay timers by 20%

SymCom warrants its microcontroller based products against defects in material or workmanship for a period of five (5) years from the date of manufacture. All other products manufactured by SymCom shall be warranted against defects in material and workmanship for a period of two (2) years from the date of manufacture. For complete information on warranty, liability, terms, returns, and cancellations, please refer to the SymCom Terms and Conditions of Sale document.

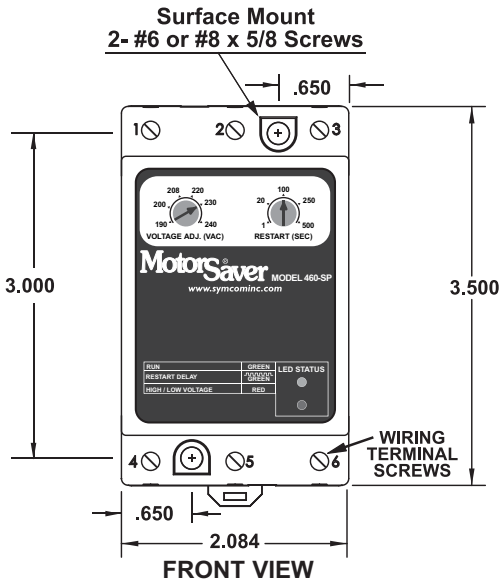

FRONT VIEW

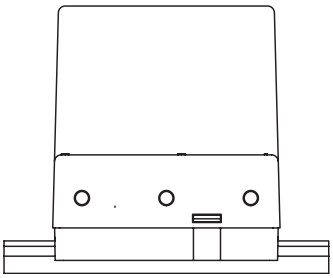
BOTTOM VIEW

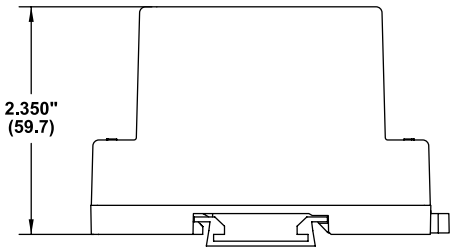

SIDE VIEW

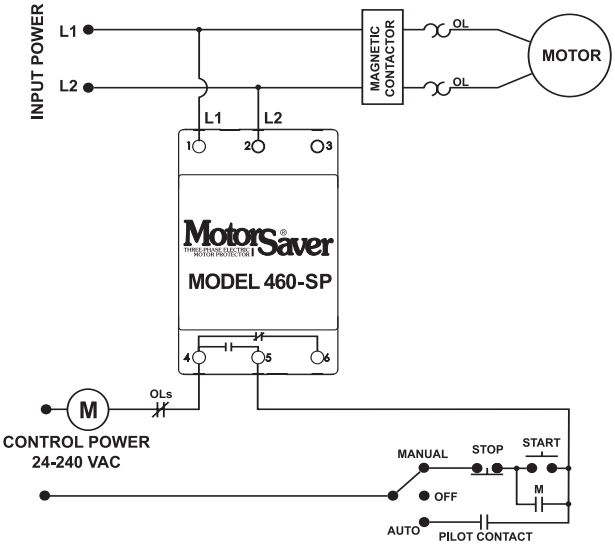

TYPICAL WIRING DIAGRAM

SymCom Inc
Motor Protection & Controls Since 1974
2880 North Plaza Drive • Rapid City, SD 57702
(800) 843-8848 • (605) 348-5580 • FAX (605) 348-5685
www.symcominc.com • email: sales@symcominc.com

10/05

SPECIFICATION FORM

PROJECT NAME	BY	DATE	REVISION	ICS PROJECT NO
SAND COULEE, MT	SM	08/2014	SUBMITTAL	2848

SPECIFICATION:

DEVICE: CIRCUIT BREAKER

MANUFACTURER: ABB

MODEL:

RANGE / SCALE: 30 AMP, 480 VAC

INPUT: N/A

OUTPUT: N/A

QUANTITY:

FEATURES:

CIRCUIT BREAKER	TS3N125TW
CIRCUIT BREAKER	T1N060TL
CIRCUIT BREAKER	T1N030TL

Tmax
Molded case circuit breakers

Tmax
Molded case circuit breakers

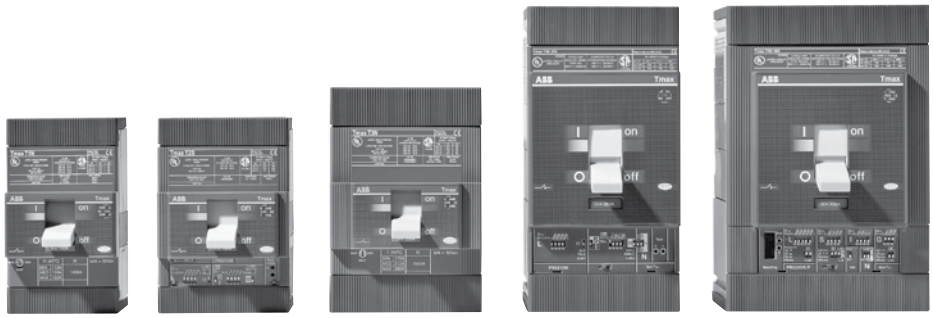

Introduction
ABB is once again demonstrating its commitment to new product development and its superiority in product technology. Never before has the industry seen such high performance, versatility and standardization in a range of molded case circuit breakers.

The ABB Tmax line of circuit breakers, with a range up to 3000A, has several key features that go along with its very small size:

- Double insulation – this construction characteristic allows for the UL Listed field installation of internal accessories without exposure to energized parts.
- Complete range of electrical and mechanical accessories
- Positive operation – breakers from ABB ensure that the toggle indicates the precise position of the moving contacts. This guarantees safe and reliable signaling by the device.
- Installation – Tmax molded case circuit breakers can be installed in panels and switchboards in either the horizontal or vertical planes while being fed from either end without any derating of their performance characteristics.
- Interrupting ratings at 480VAC up to 150kAIC.
- Compact size
- All Tmax molded case circuit breakers are UL Listed and IEC rated for global application and acceptance.
- All versions of the Tmax family are suitable for reverse feed applications.

The ABB Tmax product line has the performance and accessories to satisfy all industry requirements in the 600VAC to 600VDC ranges.

Frame sizes — Nine basic sizes
The ABB Tmax series includes nine basic frame sizes as well as the T1 single pole with the range rated from 15A to 3000A at 480VAC. The various versions carry the following interrupting capacities:

- **B** Basic breaking capacity
- **N** Normal breaking capacity
- **S** Standard breaking capacity
- **H** High breaking capacity
- **L** Extra high breaking capacity
- **V** Very high breaking capacity

Derived versions
- Thermal magnetic
- Electronic
- Molded case switches
- Motor circuit protectors (MCPs)
- Direct current (DC) rated

ABB Tmax versions
- Fixed: all models
- Drawout or plug-in: T2, T3, Ts3, T4, T5, T6, T7 & T7M
- UL File #E93565 (breakers and MCPs)
  #E116596 (Accessories)
  #E116595 (Molded case switches)

Selection Guide
Circuit breakers for power distribution
T1 – Ts3

T1 1P

T1

T2

T3

Ts3

Type			Tmax T1 1p	Tmax T1	Tmax T2		Tmax T3		Tmax Ts3			Tmax Ts3		
Frame size		[A]	100	100	100		225		150			225		
Number of poles		[Nr]	1	3-4	3-4		3-4		2-3-4			2-3-4		
Rated voltage	AC (50-60Hz)	[V]	347	600Y/347	480		600Y/347		600			480		
	DC	[V]		500			500		600			500		
Interrupting ratings			B	N	S	H	N	S	N	H	L	N	H	L
240V AC		[kA rms]		50 ②	65	150	50	65	65	100	150	65	100	150
277V AC		[kA rms]	18 ①											
347V AC		[kA rms]	14 ①											
480V AC		[kA rms]		22 ②	35	65	25	35	25	50	85 ⑤	25	50	65
600Y/347V AC		[kA rms]		10			10	10						
600V AC		[kA rms]							14	14	25			
250V DC (2 poles in series)		[kA rms]		25			25	35						
500V DC (3 poles in series)		[kA rms]		25			25	35						
500V DC (2 poles in series)		[kA rms]							35	50	65	20	35	50
600V DC (3 poles in series)		[kA rms]							20	35	50			
Trip units	TMF		■	■	■		■		■			■		
	TMD/TMA													
	ELT				■									
	MA				■		■		■			■		
	Electronic				■									
Dimensions	H	[in/mm]	5.12/130	5.12/130	5.12/130		5.9/150		6.7/170			6.7/170		
	W 3p	[in/mm]	1/25.4	3/76	3.54/90		4.13/105		4.13/105			4.13/105		
	D	[in/mm]	2.76/70	2.76/70	2.76/70		2.76/70		4.07/103.5			4.07/103.5		
Mechanical life		[No. operations]	25000	25000	25000		25000		25000			25000		

① In15A = 10kA@277VAC 10kA@347VAC
② In15A = 35kA@240VAC 14kA@480Y/277 VAC
③ T5 600 with electronic trip units only and in three pole version
④ 2p breakers: available only in N interrupting rating
⑤ In from 15A up to 30A=65kA@480V AC

T1
100A, 600Y/347V, 480V Δ
Thermal-magnetic

T1

Dimensions 3P Fixed Version 5.12H x 3.00W x 2.76D
Weight 2.34 (lbs)

General
The T1 breaker family ranges from 15 through 100 amperes. The T1 trip units are non-interchangeable and use the very latest technology in electromagnetic relays for overcurrent trip protection. Thermal overload protection is provided by heat sensitive bimetals. Short circuit protection for the breaker is accomplished using a precise magnetic coil. State of the art construction in contacts and arcing chambers aid in limiting damaging fault currents through the protected circuits.

Standards
The UL489/CSA 22.2 version of T1 also carries an IEC-60947-2 rating.

Versions
The T1 frame is available in two versions:
T = Thermal-magnetic, fixed
D = Molded case switch

Performance levels
The T1 breaker has two performance levels available:
B = Basic single pole
N = Normal three pole

Number of poles
The T1 molded case circuit breaker is available in single, three and four pole versions. Estimate 4 pole pricing by adding 35% to the 3 pole price and contact your ABB sales person for details.

Molded case switches
UL489 switches include no overcurrent protection except for a high instantaneous trip mechanism for self protection.

UL489 / CSA C22.2 Interrupting capacity (kA RMS)

Voltage	Continuous rating	B (1 pole)	N
240VAC	15 – 100A	—	50 ①
347VAC	15A 20 – 100A	10 14	— —
480VAC Δ	15A ② 20 – 100A	— —	14 22
600Y/347VAC	15 – 100A	—	10
250VDC 2 pole series	15 – 100A	—	25
500VDC 3 pole series	15 – 100A	—	25

IEC 60947-2 Interrupting capacity (kA RMS)

Voltage	Continuous rating	B (1 pole)	N
230VAC	15 – 100A	25 ③	50
415VAC	15 – 100A	—	36
690VAC	15 – 100A	—	6
500VDC 2 pole series	15 – 100A	—	36

① In 15A 35kA @ 240VAC.
② 15A available in 480Y/277 VAC only.
③ Interrupting capacity for 16-20A is 16kA

T1
100A, 600Y/347V, 480V Δ
Thermal-magnetic/Molded Case Switch

T1B TMF — Single pole thermal magnetic fixed ①

Breaker	IC at 277VAC	Rating	Magnetic trip	1 pole, 277VAC catalog number	List price
T1B	10kA	15A	1000A	T1B015TL-1	$ **230**
	18kA	20A	1000A	T1B020TL-1	
		25A	1000A	T1B025TL-1	
		30A	1000A	T1B030TL-1	
		40A	1000A	T1B040TL-1	
		50A	1500A	T1B050TL-1	
		60A	1500A	T1B060TL-1	
		70A	1500A	T1B070TL-1	**262**
		80A	1500A	T1B080TL-1	
		90A	1500A	T1B090TL-1	
		100A	1500A	T1B100TL-1	

T1N TMF — 3 pole thermal magnetic fixed

Breaker	IC at 480VAC	Rating	Magnetic trip	3 pole, 600Y/347VAC/500VDC catalog number	List price
T1N	14kA	15A	1000A	T1N015TL ②	**$ 402**
	22kA	20A	1000A	T1N020TL	
		25A	1000A	T1N025TL	
		30A	1000A	T1N030TL	
		40A	1000A	T1N040TL	
		50A	1500A	T1N050TL	
		60A	1500A	T1N060TL	
		70A	1500A	T1N070TL	**479**
		80A	1500A	T1N080TL	
		90A	1500A	T1N090TL	
		100A	1500A	T1N100TL	

T1N TMF — 100% Rated thermal-magnetic

Breaker	IC at 480VAC	Rating	Magnetic trip	3 pole 600Y/347 500VDC catalog number	List price
T1N	14kA	15 ①	1000A	T1NQ015TL	**$ 442**
	22kA	20	1000A	T1NQ020TL	
		25	1000A	T1NQ025TL	
		30	1000A	T1NQ030TL	
		40	1000A	T1NQ040TL	
		50	1500A	T1NQ050TL	
		60	1500A	T1NQ060TL	
		70	1500A	T1NQ070TL	**527**
		80	1500A	T1NQ080TL	
		90	1500A	T1NQ090TL	
		100	1500A	T1NQ100TL	

T1N-D — Molded case switch

Breaker	Interrupting capacity ③	Rating	Magnetic trip	480VAC/500VDC catalog number	List price
T1-D	240V, 50kA	100A	1000A	T1N100DL	**$ 431**

① Electrical/mechanical accessories cannot be installed on single pole breakers.
② Rated 480Y/277 VAC for 15A.
③ When protected by a OCPD with appropriate ratings.

SPECIFICATION FORM

PROJECT NAME	BY	DATE	REVISION	ICS PROJECT NO
SAND COULEE, MT	SM	08/2014	SUBMITTAL	2848

SPECIFICATION:

DEVICE: CONTACTOR

MANUFACTURER: ABB

MODEL: NEMA A SERIES

RANGE / SCALE: SIZE 1

INPUT: 480 VAC 3 PHASE

OUTPUT: 480 VAC 3 PHASE

QUANTITY:

FEATURES:

CONTACTOR A26N1-30-10-84

A, AL, AE NEMA rated, non-reversing, 3-pole
Class A controllers Sizes 00…5
AC or DC operated coils

A26N1

A145N4

Electrical ratings ①

Non-reversing

NEMA size	Continous current rating (A)	NEMA ICS 2-2000 (R2005) AC motor ratings, breaking all lines (hp)							Standard auxiliary contacts ②		Catalog number
		Single phase, 50/60 Hz		Three phase, 60 Hz							
		120V	230V	200V	230V	380… 415V ③	460V	575V	NO	NC	
Type A, AC operated coils											
00	9	1/3	1	1.5	1.5	1.5	2	2	1	-	▼ A9N00-30-10-Δ
0	18	1	2	3	3	5	5	5	1	-	▼ A16N0-30-10-Δ
1	27	2	3	7.5	7.5	10	10	10	1	-	▼ A26N1-30-10-Δ
2	45	3	7.5	10	15	25	25	25	1	1	A50N2-30-11-Δ
3	90	-	-	25	30	50	50	50	1	1	A75N3-30-11-Δ
4	135	-	-	40	50	75	100	100	1	1	A145N4-30-11-Δ
5	270	-	-	75	100	150	200	200	1	1	A260N5-30-11-Δ
Type AL, DC operated coils											
00	9	1/3	1	1.5	1.5	1.5	2	2	1	-	▼ AL9N00-30-10-Δ
0	18	1	2	3	3	5	5	5	1	-	▼ AL16N0-30-10-Δ
1	27	2	3	7.5	7.5	10	10	10	1	-	▼ AL26N1-30-10-Δ
Type AE, double-wound DC operated coils											
00	9	1/3	1	1.5	1.5	1.5	2	2	1	-	▼ AE9N00-30-11-Δ
0	18	1	2	3	3	5	5	5	1	-	▼ AE16N0-30-11-Δ
1	27	2	3	7.5	7.5	10	10	10	1	-	▼ AE26N1-30-11-Δ
2	45	3	7.5	10	15	25	25	25	1	1	AE50N2-30-11-Δ
3	90	-	-	25	30	50	50	50	1	1	AE75N3-30-11-Δ

▼ Planned legacy product; recommend AF series contactors.

Coil voltage selection chart (Δ)

Rated control circuit voltage Uc ④	A9N00… A260N5	AL9N00… AL26N1	AE9N00… AE75N3
12V DC	-	80	80
24V AC	81	-	-
24V DC	-	81	81
110…120V AC, 60Hz	84	-	-
125V DC	-	87	87
220V DC	-	88	88
230..240V AC, 60 Hz	80	-	-
240V DC	-	89	89
480V AC, 60 Hz	51	-	-
600V AC, 60 Hz	55	-	-

Example(s):
24V DC input voltage: AL26N1-30-10-81
120V AC input voltage: A260N5-3011-84

① For selection purposes, for complete electrical ratings, see Technical Data.
② Auxiliary contacts integral for A9N00...A26N1 & AL9N00...AL26N1; side-mount for A50N2...A260N5 & AE9N00...AE75N3.
③ 50 Hz.
④ AC coil input voltage(s) at 50/60 Hz unless specified. Additional voltages pg. 1.35.

SPECIFICATION FORM

PROJECT NAME	BY	DATE	REVISION	ICS PROJECT NO
SAND COULEE, MT	SM	08/2014	SUBMITTAL	2848

SPECIFICATION:

DEVICE: OVERLOAD

MANUFACTURER: ABB

MODEL:

RANGE / SCALE: N/A

INPUT: N/A

OUTPUT: N/A

QUANTITY:

FEATURES:

OVERLOAD	TA25DU32
OVERLOAD	TA25DU19

Thermal Overload relays

Thermal overload relays
Type TA
Class 10
Class 20

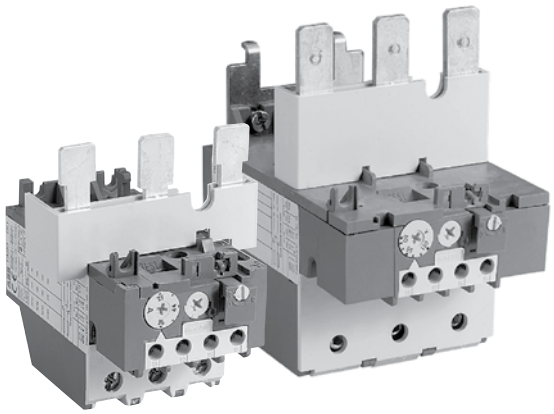

Description

- Available for starter construction with A Line contactors and separate panel mounting
- Designed for close couple mounting
- Separate base mounting available for all overload relays
- Class 10 adjustable overload relays are standard with all ABB Line starters
- Reset can also be adjusted to function as a stop button
- Screwdriver guide holes
- All terminal screws are available from the front
- UL File No: E48139
- CSA File No: LR98336
- Trip indication
- Remote trip and reset option available
- Single phase and phase unbalance protection
- Isolated alarm circuit (N.O.) contact
- Ambient compensation: -25°C to +55°C (-13°F to +131°F)
- Manual test
- Manual or automatic reset
- Factory calibrated and tested
- Wide adjustment range

Tripping classes of the thermal overload relays

Standard classes in IEC 947-4-1 are classes: 10 A, 10, 20, 30. The tripping class indicates according to IEC 947-4-1 the maximum tripping time in seconds under specified conditions of test at 7.2 times the setting current and specifies tripping and non tripping times for 1.5 and 7.2 times the setting current. Mostly used class is 10 A.

Abstract from IEC 947-4-1

Tripping class		10 A	10	20	30
Max. tripping time at 1.5 x setting current (warm state)	(s)	120	240	480	720
Tripping time at 7.2 x setting current (cold state)	(s)	2 – 10	4 – 10	6 – 20	9 – 30
At 1.05 x setting current		no tripping			

Description

TA thermal overload relays are used with A Line contactors for the protection of motors having a nominal voltage of up to 600VAC max per UL/CSA (690VAC and 800VDC per IEC).

Product range

- **Standard relays:**

Types: TA25DU, TA42DU, TA75DU, TA80DU, TA110DU, TA200DU and TA450DU

- TA25 to TA110 and TA200 are directly connected in the motor circuit.
- TA450DU relays are fed through a linear type transformer

- **Special construction**

Thermal overload relays with different certifications and approvals.
Relays for protection EEx e motors.

Construction and function

- **General**

Thermal O/L relays and their accessories meet UL, CSA and most other important international standards (IEC), European standards (EN) and the most important national standards (DIN-VDE, NFC-UTE, BS, etc.). They meet the certification and approval directives required throughout the world.

Thermal overload relays are 3 pole. The motor current flows through their bimetals (1 per phase) which are indirectly heated. Under the effect of the heating, the bimetals bend, cause the relay to trip and the position of the auxiliary contacts to change.

The relay setting range is graduated in amps. In compliance with international and national standards, the setting current is the motor nominal current and not the tripping current (no tripping at 1.05 x setting current, tripping at 1.2 times setting current).

The tripping curves (cold or warm starting, 3 phases and 2 phases) are shown on page 2.14.

The relays are built to be self protecting in the event of an overload until the short circuit protection device is activated.

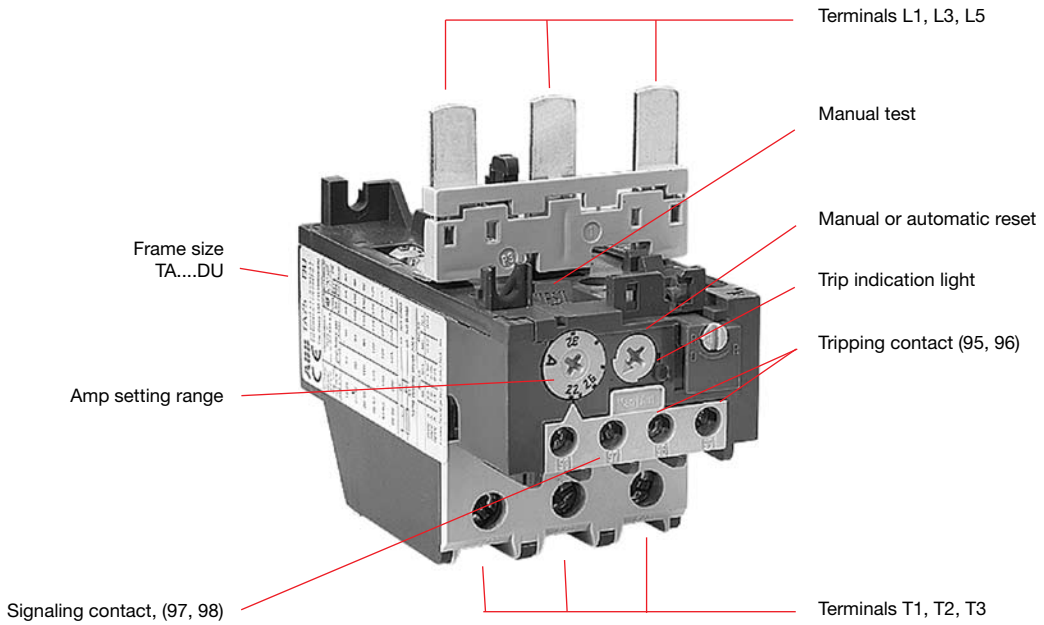

TA25DU

Application
Technical data

- **All the relays have:**
  - Free tripping: the resetting button, even if held in, does not prevent tripping of the thermal overload relay in the event of a fault.
  - Temperature compensation
  - Phase failure protection according to IEC 947-4-1: Within the limits of the setting range, a reduced tripping time, and thus improved motor protection, is obtained in case of a phase failure.
  - Tripping class: 10A, for TA relays
  - Test functions and resetting: see table below.
- **Auxiliary contacts**

The relays have two built in auxiliary contacts: NC marked 95-96; NO marked 97-98. Both contacts are physically separate and can thus be used for 2 different circuits (control circuit and indication circuit).

Function of TA25DU – TA450DU thermal O/L relays

	Resetting / Contacts	**Relay tripped** {**95-96 Open** **97-98 Closed**		**Relay not tripped** {**95-96 Closed** **97-98 Open**
		Manual	Automatic	Both manual and automatic
Effect of blue	Resetting	Yes	No	No
button indexed on R (RESET ONLY)	95-96	Closed when the button is pressed	No effect	No effect
	97-98	Open when the button is pressed		
Effect of blue	Resetting	Yes	No	No
button indexed on R/O (RESET/OFF)	95-96	Closed when the button is released	No effect	Open when the button is pressed Closed when the button is released
	97-98	Open when the button is pressed		No effect

Selection guide
TA25DU – TA80DU

Types

TA25DU

TA42DU

TA75DU

TA80DU

Main characteristics

Construction		3 pole with ambient temperature variation compensation. Protection against single phase operation. Built in auxiliary contacts: 1N.O. + 1N.C.			
Resetting		Convertible: Manual to Automatic			
Setting ranges	Number	18	3	6	4
	from	0.1 – 0.16A	18 – 25A	18 – 25A	29 – 42A
	to	24 – 32A	29 – 42A	60 – 80A	60 – 80A

Mounted with contactors

Mounting kit	No kit is required for mounting thermal O/L relays below contactors			
Types of contactors for combined mounting	A/AE/AL9 A/AE/AL12 A/AE/AL16 A/AE/AL26 A/AE/AL30 A/AE/AL40	A/AE30 A/AE40	A/AE/AF50 A/AE/AF63 A/AE/AF75	A/AE/AF95 A/AE/AF110

Mounted separately (i.e. separate from contactor)

Separate mounting kit	DB25	DB80		

Accessories

Tripping coil	DS25-A			
Resetting coil	DR25-A			
Terminal shroud	Terminals protected against direct contact (without the addition of terminal shrouds)			
Function markers	BA5-50			

Selection guide
TA110DU – TA450DU

Types

TA110DU

TA200DU

TA450DU

Main characteristics

Construction		3 pole with ambient temperature variation compensation. Protection against single phase operation. Built in auxiliary contacts: 1N.O. + 1N.C.			
Resetting		Convertible: manual to automatic			
Setting ranges	Number	2	6	3	
	from A to A	65 – 90 80 – 110	65 – 90 150 – 200	130 – 185 220 – 310	

Mounted with contactors

Mounting kit	No kit is required for mounting thermal O/L relays		See page 2.7.
Types of contactors for combined mounting	A/AE/AF95 A/AE/AF110	A/AF145 A/AF185	A/AF210 + DT450/A300 A/AF260 + DT450/A300 A/AF300 + DT450/A300
Mounted separately (i.e. separate from contactor)			
Separate mounting kit	DB200		No kit required for separate mounting of thermal O/L relays

Accessories

Tripping coil				
Resetting coil				
Terminal shroud	①	LT200 –	LT450 –	
Function markers	BA5-50			

① Terminals protected against direct contact (without the addition of terminal shrouds)

TA25 - TA450
Class 10
for Contactors A9 – A/AF300

TA25DU

TA42DU

TA75DU

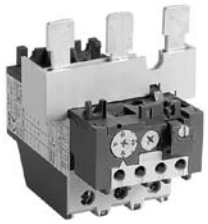
TA80DU

TA110DU

For contactor	Setting range A	Suffix Code	Catalog number	List price
A/AE/AL9 – A/AE/AL40	0.1 – 0.16	A	TA25DU0.16	$ 63
	0.16 – 0.25	B	TA25DU0.25	
	0.25 – 0.4	C	TA25DU0.4	
	0.4 – 0.63	D	TA25DU0.63	
	0.63 – 1.0	E	TA25DU1.0	
	1.0 – 1.4	F	TA25DU1.4	
	1.3 – 1.8	G	TA25DU1.8	
	1.7 – 2.4	H	TA25DU2.4	
	2.2 – 3.1	J	TA25DU3.1	
	2.8 – 4.0	K	TA25DU4.0	
	3.5 – 5.0	L	TA25DU5.0	
	4.5 – 6.5	M	TA25DU6.5	
	6.0 – 8.5	N	TA25DU8.5	
	7.5 – 11	P	TA25DU11	
	10 – 14	Q	TA25DU14	
	13 – 19	R	TA25DU19	
	18 – 25	S	TA25DU25	
	24 – 32	T	TA25DU32	
A/AE30 – A/AE40	18 – 25	A	TA42DU25	78
	22 – 32	B	TA42DU32	
	29 – 42	C	TA42DU42	
A/AE/AF50 – A/AE/AF75	18 – 25	A	TA75DU25	102
	22 – 32	B	TA75DU32	
	29 – 42	C	TA75DU42	
	36 – 52	D	TA75DU52	
	45 – 63	E	TA75DU63	
	60 – 80	F	TA75DU80	
A/AE/AF95 – A/AE/AF110	29 – 42	C	TA80DU42	135
	36 – 52	D	TA80DU52	
	45 – 63	E	TA80DU63	
	60 – 80	F	TA80DU80	
	65 – 90	A	TA110DU90	165
	80 – 110	B	TA110DU110	
A/AF145 – A/AF185	65 – 90	A	TA200DU90	165
	80 – 110	B	TA200DU110	
	100 – 135	C	TA200DU135	225
	110 – 150	D	TA200DU150	
	130 – 175	E	TA200DU175	
	150 – 200	F	TA200DU200	
A/AF210 – A/AF300	130 – 185	A	TA450DU185 ①	488
	165 – 235	B	TA450DU235	
	220 – 310	C	TA450DU310	
AF400 – AF750	See electronic overloads, pages 2.21			

① TA450 overloads require mounting kits for installation.

Thermal Overload Relays with Trip Class 20
For contractors A9 - A80

TA25DU

TA42DU

TA75DU

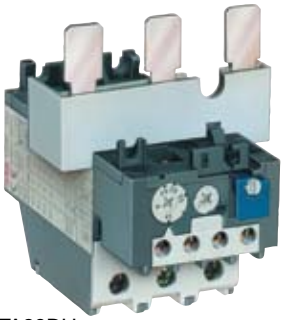

TA80DU

Ordering Details Type	Order code	Setting range A … A	Suffix	Packing unit piece	List Price
TA25DU trip class 20 for contactors A9 … A40 and (T) AL9 … (T) AL30					
TA25DU1.8-20	1SAZ211401R1025	1.3 … 1.8	GZ	1	
TA25DU2.4-20	1SAZ211401R1028	1.7 … 2.4	HZ	1	
TA25DU3.1-20	1SAZ211401R1031	2.2 … 3.1	JZ	1	
TA25DU4.0-20	1SAZ211401R1033	2.8 … 4.0	KZ	1	
TA25DU5.0-20	1SAZ211401R1035	3.5 … 5.0	LZ	1	
TA25DU6.5-20	1SAZ211401R1038	4.5 … 6.5	MZ	1	
TA25DU8.5-20	1SAZ211401R1040	6.0 … 8.5	NZ	1	**$ 63**
TA25DU11-20	1SAZ211401R1043	7.5 … 11	PZ	1	
TA25DU14-20	1SAZ211401R1045	10 … 14	QZ	1	
TA25DU19-20	1SAZ211401R1047	13 … 19	RZ	1	
TA25DU25-20	1SAZ211401R1051	18 … 25	SZ	1	
TA25DU32-20 (1)	1SAZ211401R1053	24 … 32 (1)	TZ	1	
(1) with terminal block DX25: 1x16mm²					
TA42DU trip class 20 for contactors A30, A40 and (T) AL30, (T) AL40					
TA42DU25-20	1SAZ311401R1001	18 … 25	AZ	1	
TA42DU32-20	1SAZ311401R1002	22 …32	BZ	1	**$ 78**
TA42DU42-20	1SAZ311401R1003	29 … 42	CZ	1	
TA75DU trip class 20 for contactors A50 … A75 and AE50 … AE75					
TA75DU25-20	1SAZ321401R1001	18 … 25	AZ	1	
TA75DU32-20	1SAZ321401R1002	22 … 32	BZ	1	
TA75DU42-20	1SAZ321401R1003	29 … 42	CZ	1	
TA75DU52-20	1SAZ321401R1004	36 … 52	DZ	1	**$ 102**
TA75DU63-20	1SAZ321401R1005	45 … 63	EZ	1	
TA75DU80-20	1SAZ321401R1006	60 … 80	FZ	1	
TA80DU trip class 20 for contactors A95, A110, AE 95 and AE110					
TA80DU42-20	1SAZ331401R1003	29 … 42	AZ	1	
TA80DU52-20	1SAZ331401R1004	36 … 52	BZ	1	
TA80DU63-20	1SAZ331401R1005	45 … 63	CZ	1	**$ 135**
TA80DU80-20	1SAZ331401R1006	60 … 80	DZ	1	

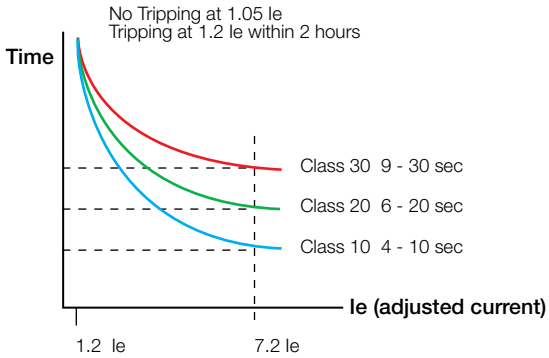

Accessories

DB25/25A

DB80

DB200

LC26-B1

Separate mounting kits

For O/L relays	Amps	Catalog number	List price
TA25DU	0.1 – 25	DB25/25A	**$ 30**
TA25DU	24 – 32	DB25/32A	**38**
TA42DU, TA75DU, TA80DU	18 – 80	DB80	**45**
TA110DU, TA200DU	100 – 200	DB200	**60**

Flat pin terminal blocks

Mounting on:	Catalog number	List price
TA25DU relay DB25/25A or DB25/32A	LC30-T LC26-B1	**$ 6**

Terminal block — AWG #8 cable

Mounting on:	Catalog number	List price
TA25DU (25A or less) or DB25/25A	DX25	**$ 15**

LC terminal blocks can be used to convert standard connections into Faston connections: 2 x 6.3mm or 4 x 2.8mm per pole. The connections are protected against accidental contact.

The LC30-T has a terminal block for the 3 power terminals and a second for the 4 auxiliary terminals of a TA25DU thermal O/L relay.

The LC26-B1 has two identical terminal blocks each for 3 power terminals. This block allows the power terminals to be mounted with two DB25 kits or a TA25DU thermal O/L relay and DB25 kit assembly.

NOTE: According to DIN 46429 part 1 and NFC 20-120 the max. capacity of a Faston connection is 25 A.

Mounting kit – for TA450 overload relay

For contactor	Catalog number	List price
A145 – A185 A210 – A300	DT450/A185 DT450/A300	**$ 225**

Terminal shrouds – for contactors and overload relays

Contactor	Overload relay	Catalog number	List price
A9 – A16 A26 – A40	TA25DU	Included	—
A30 – A40	TA42DU	Included	—
A50 – A75	TA75DU	Included	—
A95 – A110	TA80DU TA110DU	Included	—
A145 – A185	TA200DU	LT185-AY	**$ 10**
A145 – A185	Load side of TA200DU	LT200A185	**50**

Terminal lug kits

Wire range	For overloads	Catalog number	List price
6 – 250MCM	TA110DU, TA200DU	EHTK210	**$ 90**
4 – 400MCM	TA450DU185	ATK300HK	**78**
(2) 4 – 500MCM	TA450DU310	ATK300/2HK	**120**

Discount schedule ABA — A-contactor accessories
Discount schedule TAA — TA25
Discount schedule TBA — TA42, TA75
Discount schedule TCA — TA80, TA110, TA200, TA450

DS25A

DR25A

Remote tripping coils

	U voltage at 50/60 Hz	Catalog number ①	List price
DS25-A remote tripping coil			
	24V	DS25-A-24	
	48V	DS25-A-48	
	110V	DS25-A-110	
	220/380V	DS25-A-220/380	
	500V	DS25-A-500	**$ 60**
DS25-A remote resetting coil			
	24V	DR25-A-24	
	48V	DR25-A-48	
	110V	DR25-A-110	
	220/380V	DR25-A-220/380	
	500V	DR25-A-500	

Application

• The DS25-A coil is used for remote electrical tripping of the TA25 DU thermal O/L relay and is connected to the relay's normally closed 95-96 auxiliary contact.

• The DR 25-A coil is used for remote electrical resetting of the TA25DU thermal O/L relay which is adjusted for "Manual resetting;" it is connected to the relay's normally open 97-98 auxiliary contact.

The coils are not designed for continuous duty. Impulse duration: 0.2 to 0.35 s.

Set the button to "Man" (Manual resetting).

Mounting: clipped on to TA25DU thermal O/L relay.

Installation diagrams

For connection of DS25-A to TA25DU relay

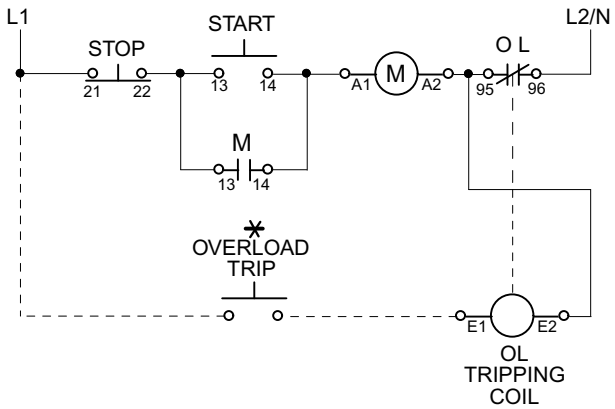

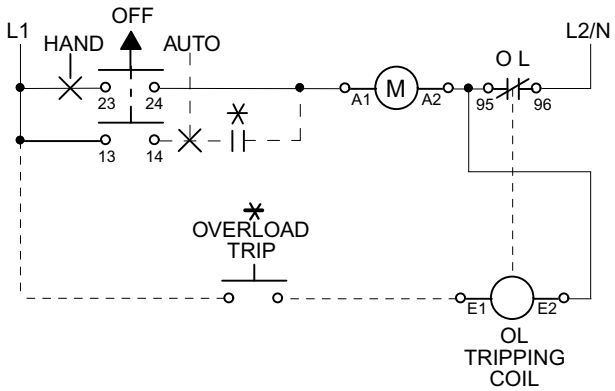

For connection of DR25-A to TA25DU relay

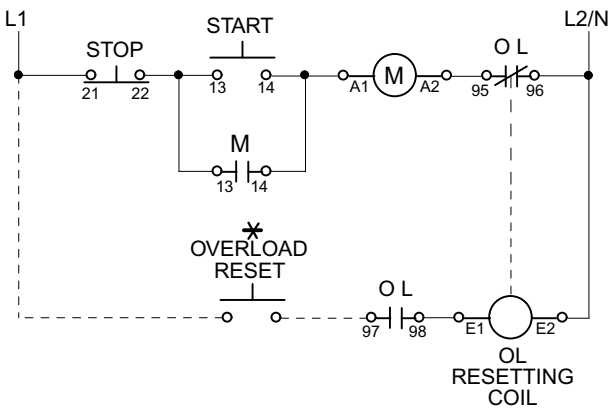

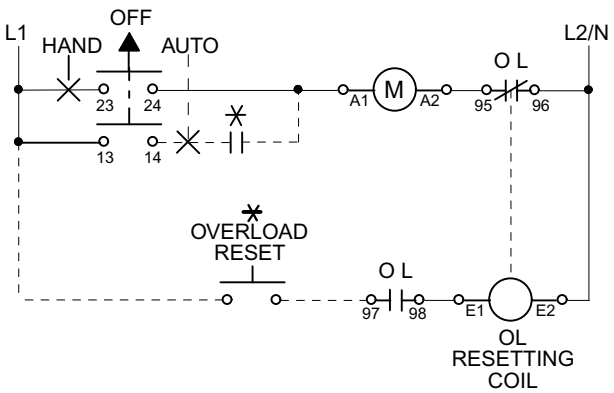

① Cannot be used with TA42, TA75, or TA200 overload relays.

Technical data
TA25DU – TA450DU

Intermittent duty

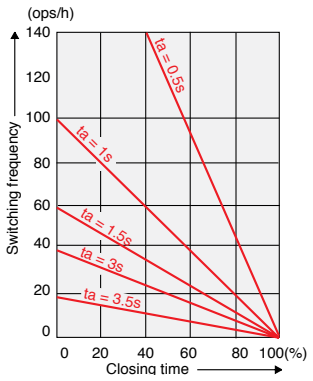

Switching frequency in relation to load factor.
t_a: motor starting time.

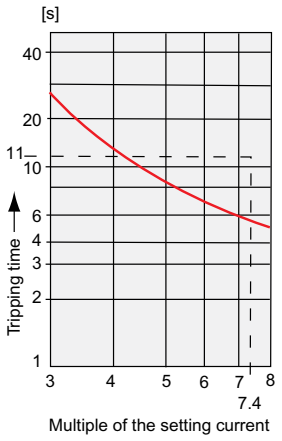

TA thermal O/L relay cold-state tripping characteristics

Switching frequency:

To avoid untimely tripping, TA and T thermal O/L relays have been designed to withstand roughly 15 switching operations per hour with an approximately equal distribution between working and rest cycles.

In these conditions, the motor starting time must not exceed 1 second and the starting current must be lower than or equal to 6 times the motor I_n.

For intermittent operations, the diagram opposite specifies relay operating limits.

Example: Motor starting time: 1 sec.
Load factor: 40 %
Switching frequency: 60 ops./h according to diagram

For a higher number of operations and for load variations (e.g. frequent starting and braking), it is advisable to use CUSTORAPID® protection.

For motors subject to particularly severe operating conditions (e.g. locked rotor) it is advisable to use protection combined with a thermal O/L relay and the CUSTORAPID® system.

Protection of motors with long starting time

See electronic overload relay section, pages 2.21 - 2.32.

Mounting position

On a support at an angle of ± 30° in relation to the vertical plane (standard position).

Other mounting positions possible, except mounting on a horizontal plane (in this case the tripping mechanism would be located above the bimetals).

Special version for EEx e motors

Consult factory.

Tripping limits at ambient temperatures varying by + 20°C

Ambient temperature compensation

Thermal O/L relays are compensated against ambient temperature variations by a compensation bimetal which is sensitive to the ambient temperature.

Thermal O/L relays are designed to operate between –5 °C and +40 °C in compliance with standard IEC 947-4-1. For a wider range of –25° C to +55 °C consult the graph opposite.

Example: tripping at –25 °C. Tripping takes place before 1.5 times the setting current.

Resetting: TA25DU – TA450 DU thermal O/L relays have convertible manual/automatic resetting.

Delivery: in manual resetting mode.

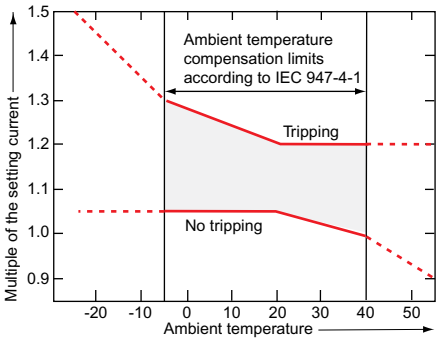

Technical data
TA25DU – TA80DU

Types		TA25DU	TA42DU	TA75DU	TA80DU
Standards: (international, European)		IEC 947-4-1, EN 60947-4-1			
Rated insulation voltage U_i according to IEC 947-4-1	V	690			
Rated impulse withstand voltage U_{imp} according to IEC 947-4-1	kV	6			
Permissible ambient temperature – for storage	°C	–40 to +70			
– for operation	°C	–25 to +55 with temperature compensation (maximum values: see page 2.9)			
Climatic withstand DIN 50017		Humidity in alternate climate KFW, 30 cycles			
Mounting positions		On a support at an angle of ±30° in relation to the vertical plane (standard position). Other positions possible except mounting on a horizontal plane (in this case the tripping mechanism would be located above the bimetals).			
Shock withstand at nominal I_e	shock duration ms	15			
Critical direction of shocks A1, A2	multiples of g	12			
Resistance to vibrations (±1 mm, 50 Hz)	multiples of g	8			
Mounting – on contactor		Latching below the contactor, screw fixing on main terminals			
– separate with DB - kit		Using screws: 2 x M4 or 35 mm EN 50022			
Terminals and cross-sectional areas for main conductors (motor side)		TA25DU setting ranges: from 0.1-0.16A 24-32 A to 18-25A			
• screw terminal					
– with cable clamp		M4	–		
– via tunnel connector		–	M5	M6	M6
– flat type for lug or bar		–	–	–	–
• conductor cross-sectional area					
– rigid solid or rigid stranded	mm^2	2 x 1.5 - 6	1 x 10	1 x 2.5 - 35 or 2 x 2.5 x 16	
– flexible with cable end	mm^2	2 x 1.5 - 4	2 x 0.75- 6	1 x 2.5 - 25 or 2 x 2.5 x 10	
– recommended bars	mm	–	–	–	–
Terminals and cross-sectional area for auxiliary conductors					
• screw terminal (screw size)					
– with cable clamp		M 3.5			
• conductor cross-sectional area					
– rigid solid or rigid stranded	2 x mm^2	0.75 - 4			
– flexible with cable end	2 x mm^2	0.75 - 2.5			
Degree of protection		All the terminals are protected against direct contact according to VDE 0106/Part. 100. (without additional terminal shrouds)			All the terminals are protected against direct
					direct contact according to VDE0106/part 100 (with additional terminal shrouds for the main terminals

Pole Technical Characteristics

Types		TA25 DU	TA42 DU	TA75 DU	TA80 DU	TA10 DU	TA200 DU	TA450 DU
Number of poles		3						
Setting ranges		see page 2.6						
Tripping class according to IEC 947-4-1, EN 60947-1		10 A						
Rated operational frequencies	Hz	0 - 400						50/60
Max. switching frequency without untimely tripping		Up to 15 starts/h or 60 starts/h with 40 % on-load factor when neither the starting current of 6 x I_n nor the starting time 1 s are exceeded.						
Resistance per phase in mΩ and heat dissipation in W		see page 2.13						

Technical data
TA110DU – TA450DU

Types		TA110DU	TA200DU	TA450DU
Standards: (international, European)		IEC 947-4-1, EN 60947-4-1		
Rated insulation voltage U_i according to IEC 947-4-1	V	690		1000
Rated impulse withstand voltage U_{imp} according to IEC 947-4-1	kV	6		8
Permissible ambient temperature				
– for storage	°C	–40 to +70		
– for operation	°C	–25 to +55 with temperature compensation (maximum values: see page 2.9)		
Climatic withstand DIN 50017		Humidity in alternate climate KFW, 30 cycles		
Mounting positions		On a support at an angle of ±30° in relation to the vertical plane (standard position). Other positions possible except mounting on a horizontal plane (in this case the tripping mechanism would be located above the bimetals).		
Shock withstand at nominal I_e	shock duration ms	15		
Critical direction of shocks A1, A2	multiples of g	12		
Resistance to vibrations (±1 mm, 50 Hz)	multiples of g	8		
Mounting – on contactor – separate with DB - kit		4 x M5 screws		
Terminals and cross-sectional areas for main conductors (motor side)				
• screw terminal	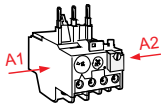			
– with cable clamp		–	–	–
– via tunnel connector		HC, M8	–	–
– flat type for lug or bar		–	M10	M10
• conductor cross-sectional area				
– rigid solid or rigid stranded	mm^2	16 – 35	25 – 120	2 x 240
– flexible with cable end	mm^2	16 – 35	25 – 95	2 x 240
– recommended bars	mm	12 x 3	20 x 4	20 x 4...5
Terminals and cross-sectional area for auxiliary conductors				
• screw terminal (screw size) – with cable clamp		M 3.5		
• conductor cross-sectional area				
– rigid solid or rigid stranded	2 x mm^2	0.75 - 4		
– flexible with cable end	2 x mm^2	0.75 - 2.5		
Degree of protection		All the terminals are protected against direct contact according to VDE 0106/Part. 100. (with additional terminal shrouds)		

Technical characteristics of auxiliary contacts for thermal O/L relays: TA25DU to TA450DU

Auxiliary contacts		normally closed N.C.	normally open N.O.
Terminal marking		95-96	97-98
Rated operational voltage U_e	VAC	500	500
Conventional thermal current (in free air) I_{th}	A	10	6
Rated operational current I_e, AC-15			
up to 240 V	A	3.0	1.5
up to 440 V	A	1.9	0.95
up to 500 V	A	1.0	0.75
Rated operational current I_e DC-13			
up to 250 V	A	0.12	0.04
Protection against short circuits			
gG (gl) fuses (according to IEC 269)	A	10	6
S 271/S 281circuit-breaker	A	k3	k1
Maximum potential difference between N.C. and N.O. auxiliary contacts	VAC VDC	500 440	500 440

Motor Protection — general

It is very important to choose an adequate protective device for the safety of the motor during operation and for its durability.
The efficiency of protection methods varies according to the application. The overview below will help you to choose.
There is no general rule and we are available to advise you for special applications and especially in the case of difficult starting.

Protective devices and efficiency

	Protection in relation to current:		Protection in relation to temperature:	
	Fuses	Protective relay with phase fault protection	Motor protection via CUSTORAPID® thermistor	Motor protection via SPEM electronic relay
	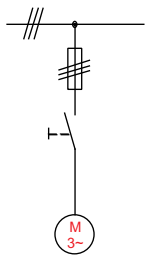	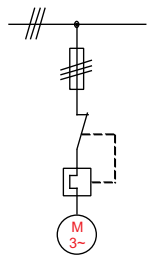	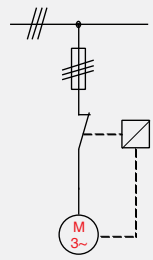	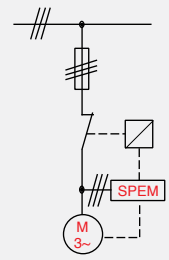
Causes of dangerous overloads for the motor windings				
1 Overload with current 1.2 times the nominal current	❑	●	●	●
2 S1-S8 nominal duties according to IEC 34-I	❑	■	●	●
3 Operation with starting, braking, reversal in operating direction	❑	■	●	●
4 Operation with starting rate at > 15 cycles/hour	❑	■	●	●
5 Locked rotor	■	●	■ for motors with special rotor	●
6 Overloads due to phase failure	❑	●	●	●
7 Network undervoltage or overvoltage	❑	●	●	●
8 Fluctuation of network frequency	❑	●	●	❑
9 Ambient temperature too high	❑	●	●	❑
10 Overheating due to external cause (i.e. overheating of bearings)	❑	❑	●	❑
11 Motor cooling disturbed	❑	❑	●	❑
12				Undercurrent protection on drop in load
13				Protection of asymmetry: wrong phase direction rotation or asymmetrical load
14				Earth fault protection
15				Automatic disconnection for auxiliary load fault

Protection efficiency:

- ❑ unsuitable
- ■ very average efficiency
- ● perfectly efficient

Note: Fuses

Fuses do not protect motors against overloads. They are only used to protect installations and lines against short circuits.

To ensure efficient protection of a motor against short circuits, it is advisable to use aM type fuses in association with thermal OLR relays.

For the selection of fuses or circuit-breakers, refer to the indications given in this catalogue concerning contactors on the one hand and thermal O/L relays on the other.

In general, fuse protection for direct-on-line starting must be sized as follows:
– aM fuses: choose the fuse rating immediately above the full load value of the motor current.
– gG (gl) fuses: determine the fuse rating immediately above the motor current value and choose the next highest fuse rating.

Technical data
Resistance and Joule losses per phase
Short circuit protection

Resistance and Joule losses per phase, short circuit protection

Setting range current from – to A A	Resistance per phase mΩ	Joule losses per phase at max. setting W
TA25DU		
0.1 – 0.16	85850	2.2
0.16 – 0.25	85150	2.2
0.25 – 0.4	13750	2.2
0.4 – 0.63	5370	2.2
0.63 – 1.0	2190	2.2
1.0 – 1.4	1120	2.2
1.3 – 1.8	670	2.2
1.7 – 2.4	383	2.2
2.2 – 3.1	229	2.2
2.8 – 4.0	137	2.2
3.5 – 5.0	87.5	2.2
4.5 – 6.5	61	2.2
6.0 – 8.5	30.4	2.2
7.5 – 11	18.2	2.2
10 – 14	11.2	2.2
13 – 19	6.3	2.3
18 – 25	4.7	2.9
24 – 32	3.2	3.3
TA42DU		
18 – 25	5.5	3.43
22 – 32	2.89	2.91
29 – 42	1.84	3.24
TA75DU		
18 – 25	5.5	3.43
22 – 32	2.89	2.91
29 – 42	1.84	3.24
36 – 52	1.3	3.51
45 – 63	0.936	3.72
60 – 80	0.615	3.94
TA80DU		
29 – 42	1.84	3.24
36 – 52	1.3	3.51
45 – 63	0.936	3.72
60 – 80	0.615	3.94

Setting range current from – to A A	Resistance per phase mΩ	Joule losses per phase at max. setting W
TA110DU		
80 – 110	0.378	3.78
TA200DU		
100 – 135	0.318	5.79
110 – 150	0.255	5.74
130 – 175	0.214	6.55
150 – 200	0.182	7.28
TA450DU		
130 – 185	—	2.5
165 – 235	—	2.5
220 – 310	—	2.5

Technical data
Tripping curves

TA25DU

TA75DU

TA110DU/SU

TA450DU

TA-DU thermal O/L relays are 3-pole with manual or automatic resetting mode selection.
The resetting button can also be used for stopping.
Built-in auxiliary contacts are physically separate and, consequently, can be used in different circuits (control circuit/indication circuit).
Each relay is temperature compensated and ensures phase failure protection.
Protective relays up to size TA75DU are protected against direct contact via the front face. Terminal shrouds are available for TA200DU to TA450DU size relays.
The connecting terminals are delivered in open position with (+,-) pozidriv screws and screwdriver guidance. It is advisable to tighten unused terminal screws.

Thermal O/L relay tripping curves

TA25DU
(tripping class 10A)

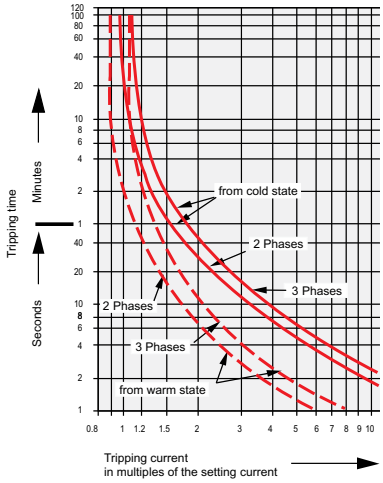

TA42DU, TA75DU and TA80DU
(tripping class 10A)

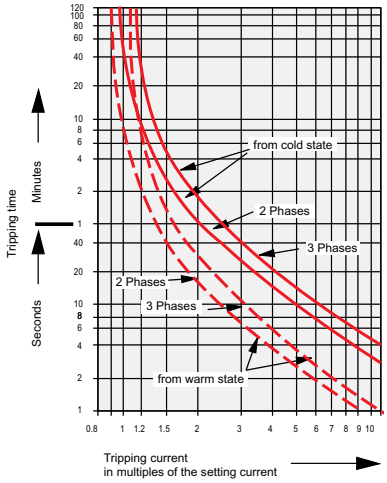

TA110DU
(tripping class 10A)

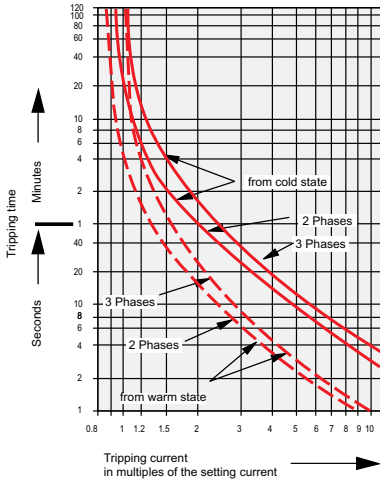

TA200DU
(tripping class 10A)

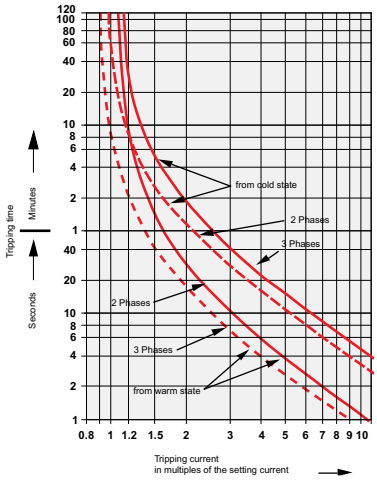

TA450DU
(tripping class 10A)

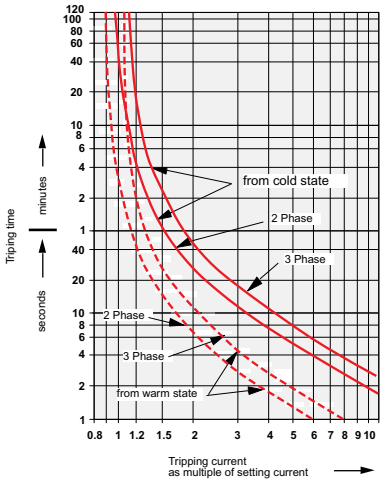

Thermal Overload Relays with Trip Class 20

Resistances and power losses per phase
Short-circuit protection

Setting range	Short-circuit protection (fuses)		UL	UL	Resistance per phase	Power loss per phase
	Type „2“ co-ordination	Type „1“ co-ordination	Fuse/600V K5	600V CB		at upper current setting
from … to A A	gL/gG A	gL/gG A	A	A	mOhm	W
Thermal overload relay TA25DU trip class 20						
1.3 … 1.8	10	25	6	-	670.3	2.2
1.7 … 2.4	16	25	10	-	381	2.2
2.2 … 3.1	16	25	10	-	235.3	2.3
2.8 … 4.0	20	25	15	-	140.7	2.3
3.5 … 5.0	25	25	20	-	91.2	2.3
4.5 … 6.5	25	25	25	-	54.5	2.3
6.0 … 8.5	32	32	35	-	32.1	2.3
7.5 … 11	40	40	45	-	15.5	1.9
10 … 14	50	50	60	-	12	2.4
13 … 19	63	63	60	-	6.3	2.3
18 … 25	80	80	70	-	4.7	3.0
24 … 32	100	100	100	-	3.2	3.3
Thermal overload relay TA42DU trip class 20						
18 … 25	100	160	80	80	5.5	3.43
22 … 32	125	160	100	80	2.89	2.91
29 … 42	160	160	150	80	1.84	3.24
Thermal overload relay TA75DU trip class 20						
18 …25	100	160	80	80	5.5	3.43
22 … 32	125	160	100	80	2.89	2.91
29 …42	160	160	150	80	1.84	3.24
36 … 52	200	200	175	125	1.3	3.51
45 … 63	200	250	200	125	0.936	3.72
60 … 80	250	250	250	125	0.615	3.94
Thermal overload relay TA80DU trip class 20						
29 … 42	160	160	150	80	1.84	3.24
36 … 52	200	200	175	125	1.3	3.51
45 … 63	200	250	200	125	0.936	3.72
60 … 80	250	250	250	150	0.615	3.94

Type 1 co-ordination according to IEC 60947-4-1: Under short-circuit conditions, the starter shall cause no danger to persons or installation and may not be suitable for further service without repair and replacement of parts.

Type 2 co-ordination according to IEC 60947-4-1: Under short-circuit conditions, the contactor or starter shall cause no danger to persons or installation and shall be suitable for further use. The risk of contact welding is recognized, in which case the manufacturer shall indicate the measures to be taken as regards the maintenance of the equipment.

Standard technical data, operating data and dimensions see TA...Relay Main Catalog

Thermal Overload Relays with Trip Class 20

Technical data

Short-circuit ratings

Voltage 480 V	Type	Setting range A ... A	5 kA		10 kA		18 kA	
			Fuse K5	CB	Fuse K5	CB	Fuse K5	CB
TA25DU	TA25DU-1.8-20	1.3 ... 1.8	6	-	6	-	6	-
	TA25DU-2.4-20	1.7 ... 2.4	10	-	10	-	10	-
	TA25DU-3.1-20	2.2 ... 3.1	10	-	10	-	10	-
	TA25DU-4.0-20	2.8 ... 4.0	15	-	15	-	15	-
	TA25DU-5.0-20	3.5 ... 5.0	20	-	20	-	20	-
	TA25DU-6.5-20	4.5 ... 6.5	25	-	25	-	25	-
	TA25DU-8.5-20	6.0 ... 8.5	35	-	35	-	35	-
	TA25DU-11-20	7.5 ... 11	45	-	45	-	45	-
	TA25DU-14-20	10 ... 14	60	-	60	-	60	-
	TA25DU-19-20	13 ... 19	60	-	60	-	60	-
	TA25DU-25-20	18 ... 25	70	-	70	-	70	-
	TA25DU-32-20	24 ... 32	100	-	100	-	100	-
TA42DU	TA42DU-25-20	18 ... 25	80	80	80	-	150	-
	TA42DU-32-20	22 ...32	100	80	100	-	150	-
	TA42DU-42-20	29 ... 42	150	80	150	-	200	-
TA75DU	TA75DU-25-20	18 ... 25	80	80	80	-	150	-
	TA75DU-32-20	22 ... 32	100	80	100	-	150	-
	TA75DU-42-20	29 ... 42	150	80	150	-	200	-
	TA75DU-52-20	36 ... 52	175	125	175	-	250	-
	TA75DU-63-20	45 ... 63	200	125	200	-	250	-
	TA75DU-80-20	60 ... 80	250	125	250	-	250	-
TA80DU	TA80DU-42-20	29 ... 42	150	80	150	-	150	-
	TA80DU-52-20	36 ... 52	175	125	175	-	175	-
	TA80DU-63-20	45 ... 63	200	125	200	-	250	-
	TA80DU-80-20	60 ... 80	250	150	250	-	250	-

Voltage 600 V	Type	Setting range A ... A	5 kA		10 kA		18 kA	
			Fuse K5	CB	Fuse K5	CB	Fuse K5	CB
TA25DU	TA25DU-1.8-20	1.3 ... 1.8	6	-	6	-	6	-
	TA25DU-2.4-20	1.7 ... 2.4	10	-	10	-	10	-
	TA25DU-3.1-20	2.2 ... 3.1	10	-	10	-	10	-
	TA25DU-4.0-20	2.8 ... 4.0	15	-	15	-	15	-
	TA25DU-5.0-20	3.5 ... 5.0	20	-	20	-	20	-
	TA25DU-6.5-20	4.5 ... 6.5	25	-	25	-	25	-
	TA25DU-8.5-20	6.0 ... 8.5	35	-	35	-	35	-
	TA25DU-11-20	7.5 ... 11	45	-	45	-	45	-
	TA25DU-14-20	10 ... 14	60	-	60	-	60	-
	TA25DU-19-20	13 ... 19	60	-	60	-	60	-
	TA25DU-25-20	18 ... 25	70	-	70	-	70	-
	TA25DU-32-20	24 ... 32	100	-	100	-	100	-
TA42DU	TA42DU-25-20	18 ... 25	80	80	80	-	150	-
	TA42DU-32-20	22 ...32	100	80	100	-	150	-
	TA42DU-42-20	29 ... 42	150	80	150	-	200	-
TA75DU	TA75DU-25-20	18 ... 25	80	80	80	-	150	-
	TA75DU-32-20	22 ... 32	100	80	100	-	150	-
	TA75DU-42-20	29 ... 42	150	80	150	-	150	-
	TA75DU-52-20	36 ... 52	175	125	175	-	175	-
	TA75DU-63-20	45 ... 63	200	125	200	-	250	-
	TA75DU-80-20	60 ... 80	250	125	250	-	250	-
TA80DU	TA80DU-42-20	29 ... 42	150	80	150	-	150	-
	TA80DU-52-20	36 ... 52	175	125	175	-	175	-
	TA80DU-63-20	45 ... 63	200	125	200	-	250	-
	TA80DU-80-20	60 ... 80	250	150	250	-	250	-

Thermal Overload Relays with Trip Class 20
Table for tripping time

Tripping times of thermal overload relays as a function of a multiple of the setting current from cold state (tolerance +/- 20% of the tripping time).

Setting range	Tripping times of thermal overload relays: at multiple of setting current					
	3	4	5	6	7.2	8
from ... to A A	Tripping times in sec					
Thermal overload relays TA25DU trip class 20						
1.3 ... 1.8	47.1	27	20.3	15.8	12.7	11.5
1.7 ... 2.4	43.3	25	18.9	14.4	11.9	10.4
2.2 ... 3.1	47.5	28	20.8	16	13.1	11.8
2.8 ... 4.0	45.6	27	19.8	15.3	12.5	11
3.5 ... 5.0	47.8	29	21.2	16	13.2	11.8
4.5 ... 6.5	47.4	28	20.3	15.5	12.5	11
6.0 ... 8.5	46.1	27	20	15	11.7	10
7.5 ... 11	42.3	25	17.8	14.1	10.9	10.5
10 ... 14	39.4	25	16.8	13	9.9	8.5
13 ... 19	38.1	21	13.6	10	7.4	6.2
18 ... 25	44.4	25	16.1	11	9	8
24 ... 32	44.4	27	17.7	13	9.8	8.5
Thermal overload relays TA42DU, TA75DU, TA80DU trip class 20						
18 ... 25	51.6	29	20.3	15	11.7	10
22 ... 32	67.9	38	26.9	20	14.8	12.5
29 ... 42	58.8	33	22.5	16	12.2	10.3
36 ... 52	59.9	34	22.7	16	12.3	10.5
45 ... 63	65.8	34	22.4	16	12.4	10.5
60 ... 80	71.9	35	23.4	17	13.9	12

Approximate dimensions
T25DU – TA42DU

00.00 / 00.00 Inches [Millimeters]

TA25DU

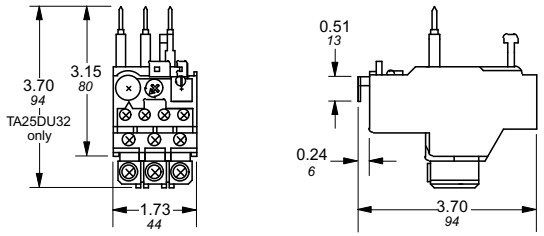

TA25DU & DB25

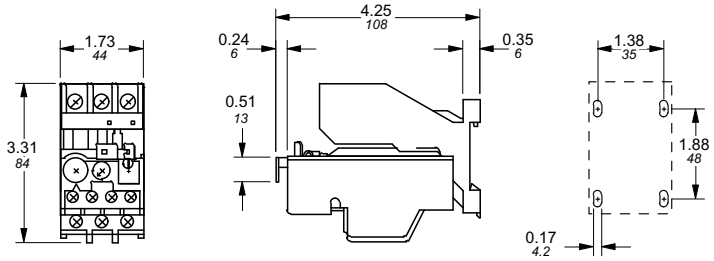

TA25DU & DB25/32

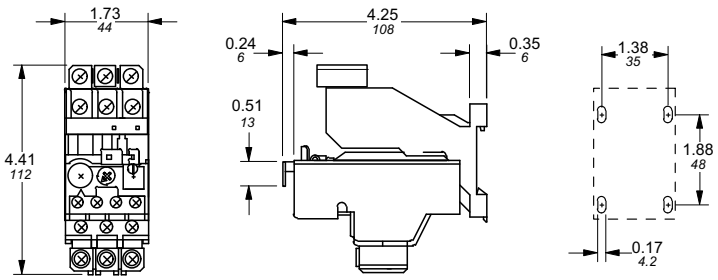

TA42DU

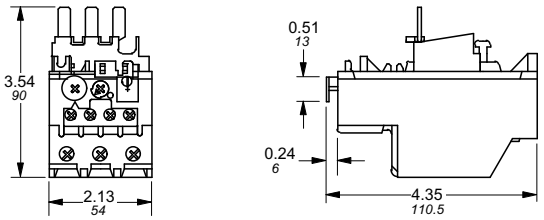

TA42DU / TA75DU & DB80

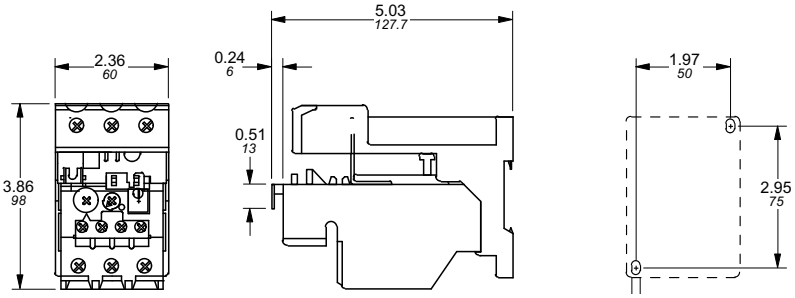

Approximate dimensions
TA75DU – TA200DU

00.00 / 00.00 Inches [Millimeters]

TA75DU

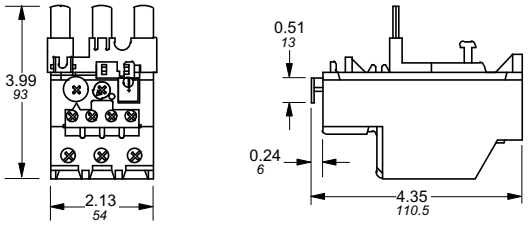

TA80DU

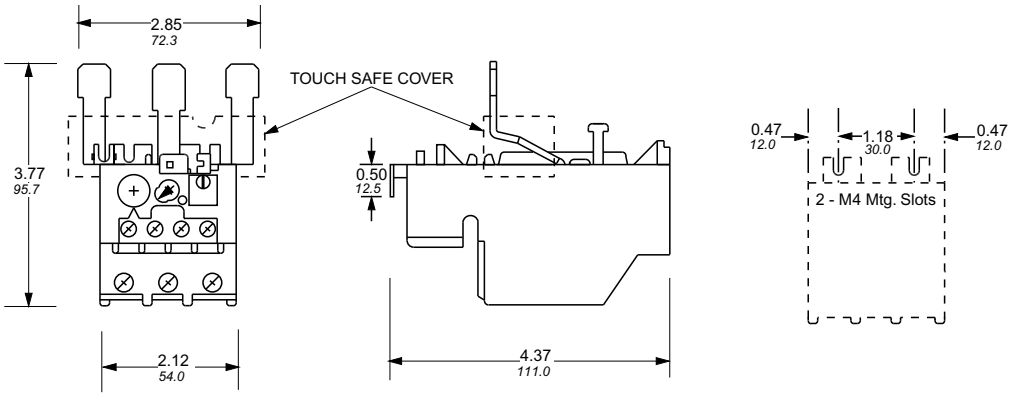

TA110DU

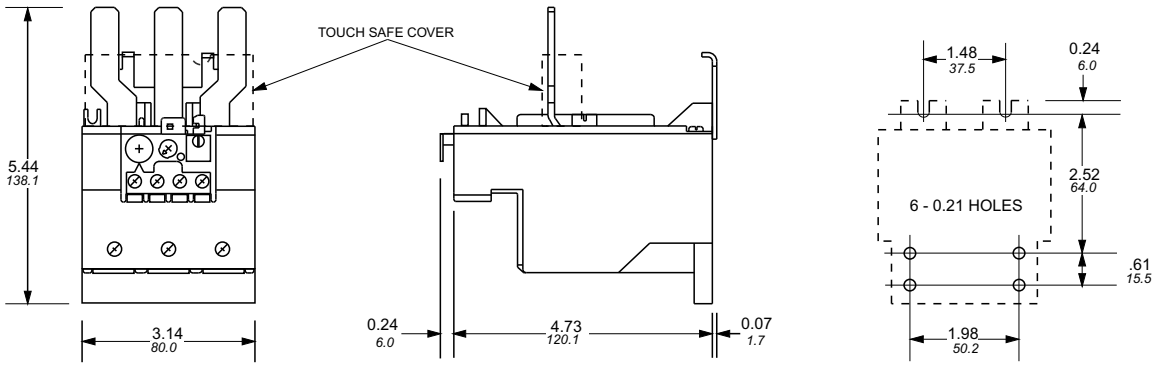

TA200DU

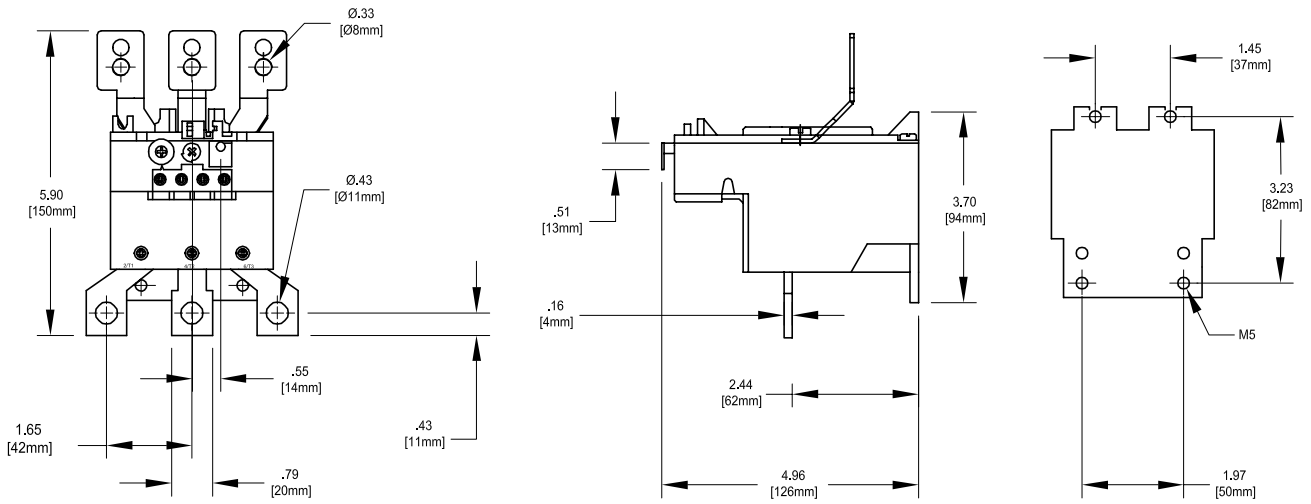

Approximate dimensions
TA450DU

00.00 / 00.00 Inches [Millimeters]

TA450DU

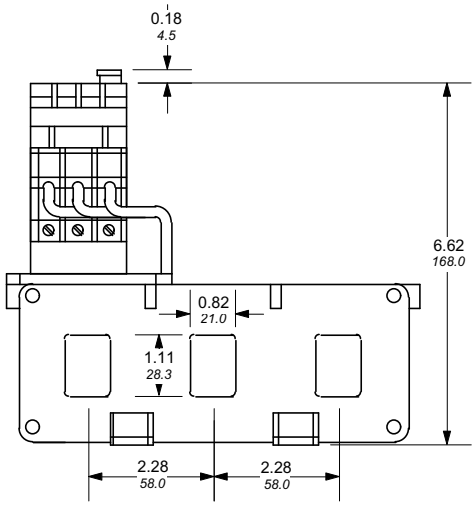

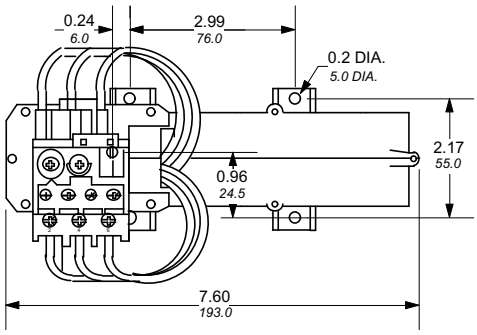

water and wastewater control solutions
Instrument Control Systems ICS HEALY-RUFF
csia CERTIFIED
13005 16TH AVE. NORTH • SUITE 100 • PLYMOUTH MN 55441
PHONE: (763) 559-0568 • FAX: (763) 559-2187
www.icshealyruff.com

ENGINEERING • INSTALLATION • SERVICE

TAB 3

SPECIFICATION FORM

PROJECT NAME	BY	DATE	REVISION	ICS PROJECT NO
SAND COULEE, MT	SM	08/2014	SUBMITTAL	2848

SPECIFICATION:

DEVICE: MICRO-VPAC IICE 5.7" COLOR TOUCH SCREEN W/ETHERNET

MANUFACTURER: HORNER

MODEL: HEALY-RUFF 903010-102

RANGE / SCALE: 12 DC IN (4 HSC), 6 RELAY OUT, 4 ANALOG IN

INPUT: N/A

OUTPUT: N/A

QUANTITY:

FEATURES:

MICRO-VPAC IICE 5.7" COLOR TOUCH SCREEN W/ETHERNET HE-XL1E2-27

Micro-VPAC II
Scalable PLC / Telemetry

HEALY-RUFF

Open-Architecture Solutions for Water and Wastewater Applications

VPAC II BRINGS IT ALL TOGETHER

VPAC controllers are available as part of Healy-Ruff solutions from basic pump control and standard telemetry systems, to complex custom controls, large system integration, and icontrol® Cloud-based SCADA services.

In one compact unit, all of our VPAC programmable controllers combine:

- Open-architecture PLC-based control
- Intuitive Graphical User Interfaces
- Multiple communication protocols and system-wide networking options
- Flexible input and output combinations and expansion modules

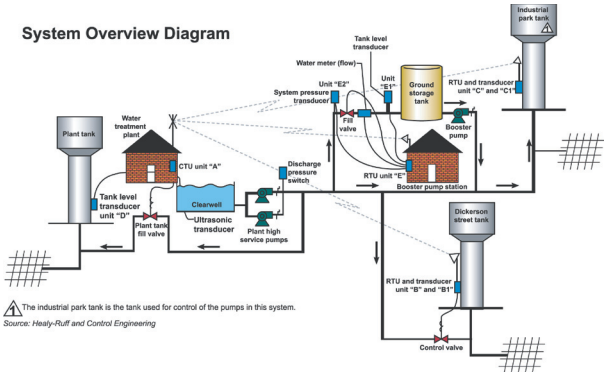

VPAC controllers are also the ideal solution for all types telemetry systems and can be used as either a **CTU (Master)** or **RTU (Remote)** within the system.

- Leased Lines
- Fiber Optic
- Radio (UHF, VHF, Spread Spectrum)
- Cellular
- Satellite
- icontrol® Cloud-based SCADA

MICRO-VPAC II

These powerful compact ¼-DIN (3.75” x 3.75”) units feature on-board I/O and removable memory for storing data and programs.

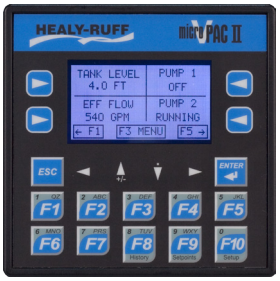

MICRO-VPAC IIT

The Micro-VPAC IIT provides a transreflective 3.5” **LCD touch screen for easy use and viewability - *even in direct sunlight!***

MICRO-VPAC IIC

The Micro-VPAC IIC provides a 5.7” **color touch screen.** An ideal combination of PLC, I/O and operator interface.

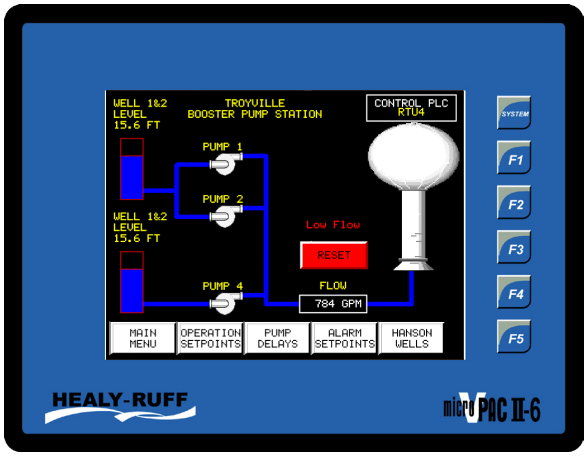

water and wastewater control solutions
Instrument Control Systems ICS HEALY-RUFF

	Micro-VPAC Family			
	Micro-VPAC II	Micro-VPAC IIT	Micro-VPAC IIC	Micro-VPAC IICe
Part Number	903005-10x	903007-10x	903006-10x	903010-10x
Display				
Graphics /Text	Yes / Yes	Yes / Yes	Color Graphics	Color Graphics
Pixels	128 x 64	160 x 128	320 x 240	320 x 240
Display Technology	2.25" Backlit LCD	3.5" Transreflex LCD Touch	5.7" TFT Touch Screen	5.7" TFT Touch Screen
Keypad / Touchscreen				
Total Keys	20	5	6	6
Function Keys	10	4	5	5
Numeric Keys	Shared	Pop-up Keypad	Pop-up Keypad	Pop-up Keypad
Touchscreen	No	Yes	Yes	Yes
Controller				
Ladder Logic Memory	256KB	256KB	256KB	256KB
Logic Scan Rate	1.2mS/K	1.2mS/K	1.2mS/K	1.2mS/K
Removable Memory	microSD	microSD	microSD	microSD
Local Comment Storage	Yes	Yes	Yes	Yes
Floating Point Support	Yes	Yes	Yes	Yes
Auto Tune PID Capable	Yes	Yes	Yes	Yes
I/O Support				
Built-in I/O	Yes	Yes	Yes	Yes
Discrete Inputs	12 - 24	12 - 24	12 -24	12 - 24
Discrete Outputs	6 - 16	6 - 16	6 - 16	6 - 16
Analog Inputs	2 - 4	2 - 4	2 - 4	2 - 4
Analog Outputs	0 - 2	0 - 2	0 - 2	0 - 2
Expandable Outputs	Yes	Yes	Yes	Yes
I/O Memory Tables				
Digital Inputs / Outputs	2048/ 2048	2048/ 2048	2048/ 2048	2048/ 2048
Analog Inputs / Outputs	512 / 512	512 / 512	512 / 512	512 / 512
General Purpose Registers	9999	9999	9999	9999
Serial Communications				
Total Active Ports	2	2	2	2
RS-232/485 Ports	Yes / Yes	Yes / Yes	Yes / Yes	Yes / Yes
PLC/Drive Protocols	Yes	Yes	Yes	Yes
RTU/Modbus Master/Slave	Yes	Yes	Yes	Yes
Healy-Ruff PRO-line	Optional	Optional	Optional	Optional
Serial ASCII In/Out	Yes	Yes	Yes	Yes
Networking				
Integrated CsCAN Network	Yes	Yes	Yes	Yes
Maximum CsCAN Distance	6000 ft/2 km	6000 ft/2 km	6000 ft/2 km	6000 ft/2 km
Programming Over Network	Yes	Yes	Yes	Yes
Peer-to-Peer Messaging	Yes	Yes	Yes	Yes
Ethernet/Internet/Wireless				
Ethernet Support	Optional	Optional	Optional	Optional
Telephone Modem Support	Optional	Optional	Optional	Optional
Wireless Modem Support	Optional	Optional	Optional	Optional
Cellular Modem Support	Optional	Optional	Optional	Optional
General Specifications				
Primary Power Range	10 - 30 VDC	10 - 30 VDC	10 - 30 VDC	10 - 30 VDC
Height	5.65" (143.6)	7.0" (178)		
Width	7.33" (186.4)	9.17" (233)		
Depth	2.2" (55.88)	3.7" (94)		
Environmental	0 to 50°C	-10 to 60°C	-10 to 60°C	-10 to 60°C
Humidity	5 to 95%	5 to 95%	5 to 95%	5 to 95%
Product Certifications	CE, UL, UL-C Class 1, Div1 ABCD	CE, UL, UL-C Class 1, Div1 ABCD	CE, UL, UL-C Class 1, Div1 ABCD	CE, UL, UL-C Class 1, Div1 ABCD
Washdown Applications	NEMA 4X Equivalemt	NEMA 4X Equivalemt	NEMA 4X Equivalemt	NEMA 4X Equivalemt
Cloud-based SCADA Services	Optional	Optional	Optional	Optional

icontrol®

ICS HEALY-RUFF

Instrument Control Systems, Inc. • 13005 16th Ave N., Suite 100 Plymouth, MN 55441 • Tel: (763) 559-0568

© 2012 ICS Healy-Ruff. All rights reserved. **www.icshealyruff.com**

SPECIFICATION FORM

PROJECT NAME	BY	DATE	REVISION	ICS PROJECT NO
SAND COULEE, MT	SM	08/2014	SUBMITTAL	2848

SPECIFICATION:

DEVICE: SURGE PROTECTOR--ANALOG

MANUFACTURER: CITEL

MODEL: SEE BELOW

RANGE / SCALE: 24 VDC

INPUT: 4-20MA

OUTPUT: 4-20MA

QUANTITY:

FEATURES:

MOUNTING	PART NUMBER
DIN RAIL MOUNT	DLA-24D3
1/2" NPTM	TSP15M-P-24D3

1-Pair & 2-Pair Din Rail DC Signal Line Surge Protectors

DLA, DLA2 Series

The DLA(2) series are Din rail mount DC signal line surge protectors with replaceable modules that are designed to protect your sensitive telephone, datacom and instrumentation equipment against harmful lightning surges and electrical transients.
The DLA(2) Series utilize a hybrid protection circuit consisting of high energy Gas Discharge Tubes (GDTs) and fast clamping diodes that offer an ultra fast response time (<1 ns) and a very high power handling capability of 20kA 8/20µs. These units automatically reset after each surge event.
The DLA(2) Series are connected via screw terminals and are available for protection of 1-pair or 2-pair. These devices incorporate a replaceable module for fast and easy maintenance.

Dimensions (in mm)

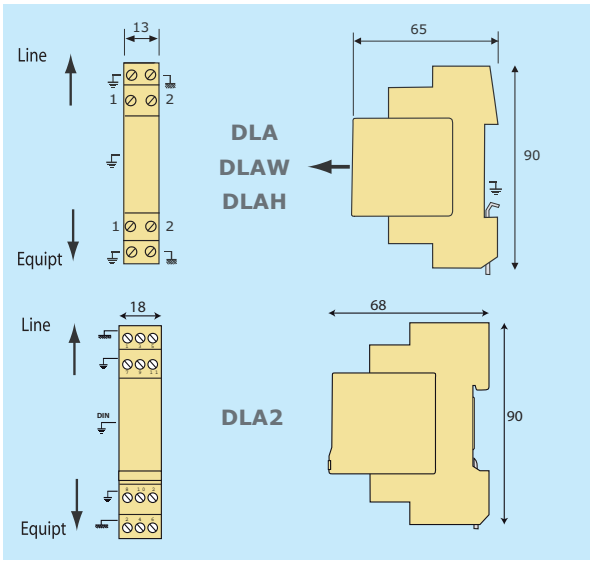

Available Options

- DLAH : Plug-in schematic similar to DLA. Designed for signal line with nominal line currents up to 2.4 Amps
- DLAW : Removal of the plug-in module will cut off line the line transmission.

Electrical Diagram

DLA standard version/ DLAH

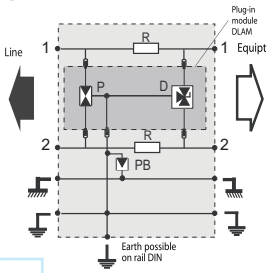

DLAW specific version

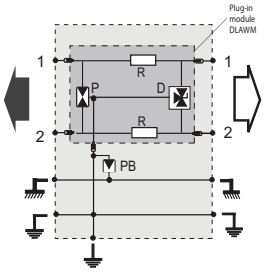

P : 3-electrode gas tube
PB : 2-electrode gas tube
R : Resistance
D : Clamping diode

DLA2

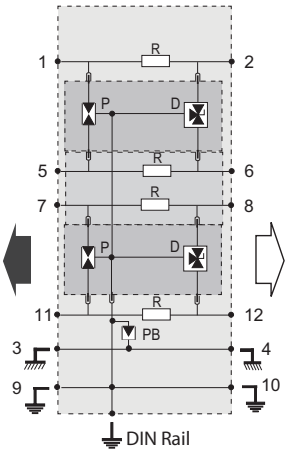

Characteristics

CITEL Number	DLA-170/ DLA2-170	DLA-48D3/ DLA2-48D3	DLA-24D3/ DLA2-24D3	DLA-12D3/ DLA2-12D3	DLA-06D3/ DLA2-06D3
Application	Telephone line ADSL, DSL	ISDN-T0 48 V line	Leased line 4-20 mA	RS232	RS422, RS485, 10 Base T
Configuration	1 pair+shield/ 2 pair+shield	1 pair+shield/ 2 pair+shield	1 pair+shield/ 2 pair+shield	1 pair+shield/ 2 pair+shield	1 pair+shield/ 2 pair+shield
Nominal line voltage (Un)	150V	48V	24V	12V	6V
Max. line voltage (Uc)	170V	53V	28V	15V	8V
Max. line current	300mA	300mA	300mA	300mA	300mA
Protection level (Up) *8/20µs impulse - 5 kA*	220V	70V	40V	30V	20V
Nominal discharge current (In) *8/20µs impulse - 10 times*	5kA	5 kA	5kA	5kA	5kA
Max. discharge current (Imax) *8/20µs impulse - 1 time*	20kA	20kA	20kA	20kA	20kA
Impulse current (Iimp) *10/350µs impulse - 2 times*	5kA	5kA	5kA	5kA	5kA
End of Life	Short-circuit	Short-circuit	Short-circuit	Short-circuit	Short-circuit
Spare module	DLAM-170/ DLA2M-170	DLAM-48D3/ DLA2M-48D3	DLAM-24D3/ DLA2M-24D3	DLAM-12D3/ DLA2M-12D3	DLAM-06D3 DLA2M-06D3
Mechanical specifications	Symmetrical DIN rail mounting Dimensions : see drawing Connection by screw - min/max. cross section 0.4/1.5 mm² Housing material : Thermoplastic UL94-V0 Earth connection via DIN rail or screw terminal				

CITEL INC | 11381 Interchange Circle South | Miramar, FL 33025 USA
Toll Free: 800.248.3548 | Tel: 954.430.6310 | Fax: 954.430.7785 | www.citel.us | sales@citel.us

DC Signal Line Surge Protector

TSP15M Series

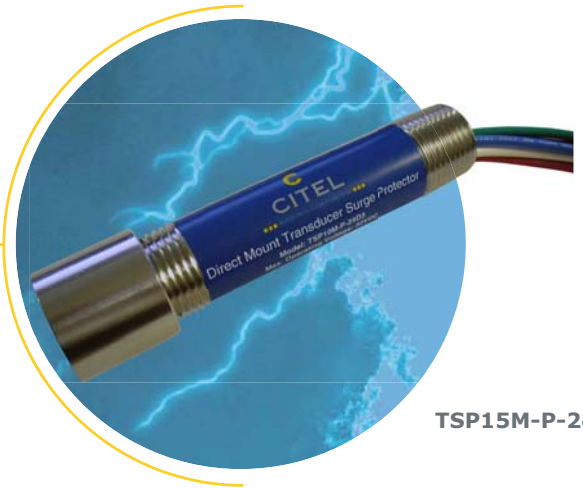

TSP15M-P-24D3

Dimensions (mm)

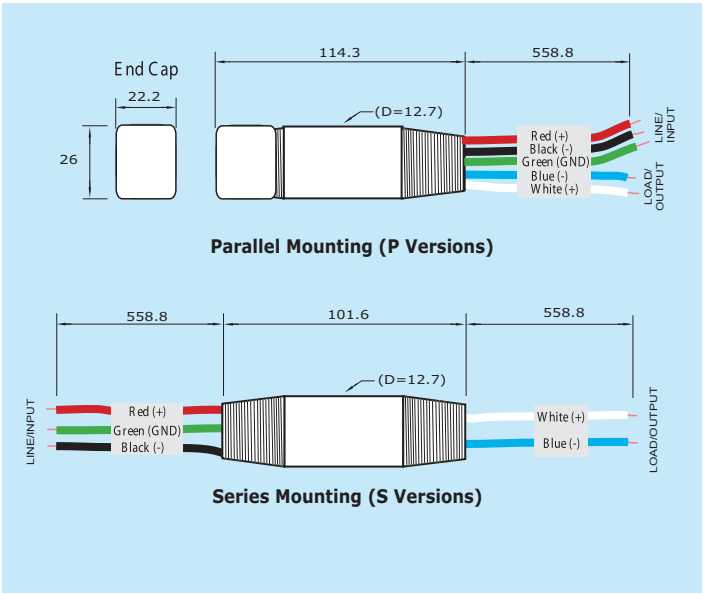

The CITEL TSP15M has been designed to protect sensitive electronic equipment against the harmful effects of overvoltage transients origination by electrical interference and lightning through the field wiring.

Its multistage hybrid circuit incorporates a CITEL Gas Discharge Tube (GDT) that enables the TSP15M to react uniquely fast and protect against surge current impulses up to 15kA.

The TSP15M offers two mounting configurations through any ½" NPT conduit and can be directly mounted through any unused port on the measurement transducers.

The TSP15M offers Common Mode and Differential Mode protection diverting harmful transients energy to ground while maintaining a tight clamp at the peak voltage. Ideal for 4-20mAcurrent loop transducers or similar instrumentation/control applications.

- 1 pair protection
- Modes of protection L-L, L-G
- Conduit Mounting
- Direct Transducer Mount
- 10 Year Limited Warranty
- Response time <5ns

Characteristics

CITEL Number	TSP15M-P-24D3	TSP15M-S-24D3	TSP15M-P-48D3	TSP15M-S-48D3
Application	Leased Line 4-20mA	Leased Line 4-20mA	ISDN-T0 48V Line	ISDN-T0 48V Line
Configuration	Parallel	Series	Parallel	Series
Nominal line voltage (Un)	24 Vdc	24Vdc	48Vdc	48Vdc
Max. line voltage (Uc)	32 Vdc	32Vdc	54Vdc	54Vdc
Max. line current	300 mA	300 mA	300 mA	300 mA
Protection level (Up) *8/20µs impulse - 5 kA*	38 Vdc	38 Vdc	82 Vdc	82 Vdc
Nominal discharge current (In) *8/20µs impulse - 10 times*	5 kA	5 kA	5 kA	5 kA
Max. discharge current (Imax) *8/20µs impulse - 1 time*	15 kA	15 kA	15 kA	15 kA
End of Life	Short-Circuit	Short-Circuit	Short-Circuit	Short-Circuit
Mechanical specifications	Conduit mounting Temperature : -55°C to 85°C Connection by #16 AWG Tinned Copper wires Housing material : Stainless Steel type 316L Earth connection via #16 AWG ground wire Weight : 363g (0.8lbs)			

Electrical Diagram

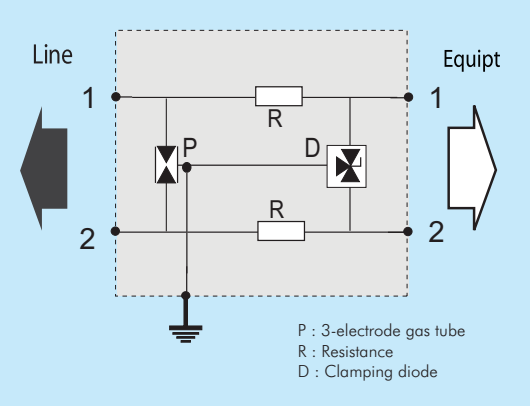

CITEL INC | 11381 Interchange Circle South | Miramar, FL 33025 USA
Toll Free: 800.248.3548 | Tel: 954.430.6310 | Fax: 954.430.7785 | www.citel.us | sales@citel.us

SPECIFICATION FORM

PROJECT NAME	BY	DATE	REVISION	ICS PROJECT NO
SAND COULEE, MT	SM	08/2014	SUBMITTAL	2848

SPECIFICATION:

DEVICE: SUBMERSIBLE WELL LEVEL SENSOR

MANUFACTURER: KPSI

MODEL: 320

RANGE / SCALE: 0-20 PSI

INPUT: 0-20.00 PSI

OUTPUT: 4-20 MA

QUANTITY:

FEATURES:

SUBMERSIBLE WELL LEVEL SENSOR	320S14B0A020.000000.000C10500B

SMALL BORE

KPSI 320 submersible level transducer

KPSI® Level Transducers

FEATURES

- SMALL BORE, 0.75" DIAMETER
- CUSTOM LEVEL RANGES UP TO 700FT (210M) H2O
- CUSTOM POLYURETHANE OR ETFE CABLE LENGTHS
- ±0.25% FSO STATIC ACCURACY
- MULTIPLE ANALOG OUTPUTS OF 4-20 MA OR 0-5 VDC
- WELDED 316SS OR TITANIUM
- OPTIONAL LIFETIME LIGHTNING PROTECTION
- TWO YEAR WARRANTY
- SHIPPED WITH LONG LIFE VENT FILTER
- APPROVED FOR HAZARDOUS LOCATIONS

APPLICATIONS

- SURFACE WATER MONITORING
- WELL MONITORING
- GROUNDWATER MONITORING
- SLUG TESTS
- PUMP CONTROL
- BALLAST TANK CONTROL
- LEVEL CONTROL

KPSI 320 specifications information

FULL SCALE LEVEL RANGES

Intermediate Level Ranges Are Available.
Vented gage reference.....5 thru 700 ft (1.5 thru .210 m) H20
Sealed gage reference.....10 thru 700 ft (3 thru 210 m) H20
Absolute reference.....35 thru 700 ft (10 thru 210 m) H20
Proof Pressure.....1.5 X FS
Burst Pressure.....2.0 X FS

STATIC PERFORMANCE

Combined effects of Non-linearity, Hysteresis and Repeatability, Best Fit Straight Line method
Static Accuracy.....320: ±0.25 %FSO
Resolution.....±0.0001%FS

ENVIRONMENTAL

Wetted Materials.....316 SS or Titanium; Delrin®; polyurethane or Viton®. Delrin® and Viton® are registered trademarks of DuPont.
Compensated Temp Range.....0 to 50ºC
Maximum allowable deviation from the Best Fit Straight Line due to a change in temperature
Thermal Error.....±0.05%FSO/ ºC worst case over compensated temperature range, for ranges < 12 ft (4 m) H2O, maximum thermal error is ±0.1% FSO/ºC
Operating Temperature Range.....-20 to 60ºC when attached to polyurethane cable
Protection Rating .....IP 68, NEMA 6P

ELECTRICAL

Excitation.....• 9-28V - VDC output (0-5V, 0-2.5V, 0-4V) • 9-28V - mA output (4-20) • 15-28V - VDC output (0-10V) • 10-28V - VDC output (1.5-7.5V)
Input Current.....20 mA max, for mA output; 3.5 mA max, for VDC output
Output... 4–20 mA, 0-5 VDC, 0-2.5VDC, 0-4VDC, 0-10VDC, 1.5-7.5VDC
Zero Offset.....±0.25 mA for mA output, < 0.25 VDC for VDC output
Output Impedance.....See Loop Resistance diagram for mA output, 20 ohm for VDCoutput
Insulation Resistance.....100 mega ohm at 50 VDC
Circuit Protection.....Polarity, surge/shorted output

CERTIFICATIONS

UL, CUL and FM; CE compliant to EN 61000-6-4:2001 and EN 61000-6-2:2001

PHYSICAL

Approximate Weight.....0.47 lbs (224 g) transducer, 0.05 lbs/ft (79 g/m) cable
Cable Jacket Material.....Polyurethane (standard), Tefzel®, Teflon® and Kevlar® are registered trademarks of DuPont. ETFE (optional), ETFE is a fluoropolymer (Teflon® derivative) material, Tefzel® or equivalent
Cable Pull Strength.....200 lbs (90 kg)
Cable Number of Conductors.....4
Cable Conductor Size.....22 AWG
Cable Seal.....Molded Polyurethane for polyurethane cable, Viton® Gland for ETFE cable

TEMPERATURE OUTPUT OPTION (not intrinsic safety approved)

Temperature Range.....-20 to 60ºC, available for 4-20mA output versions only
Output Signal.....4-20 mA
Temperature Measurement Accuracy.....±4ºC

LIGHTNING PROTECTION (optional)

Power supply needs to be limited to 150 mA to avoid lock up of the gas tube after a suppression event
Life Expectancy.....> 1,000 operations
Peak Clamping Voltage.....36 volts
Shunts.....20,000 Amperes

34 Research Drive, Hampton, VA 23666 USA, 757-865-1243, Toll Free 800-328-3665, Fax 757-865-8744
E-mail sales@PressureSystems.com • www.PressureSystems.com • online orders www.LevelandPressure.com • iso-9001:2008

measurement SPECIALTIES

KPSI 320 technical data

ELECTRICAL TERMINATION

22AWG CONDUCTORS IN A SHIELDED CABLE WITH VENT TUBE		
4-20 mA	RED BLACK	+ EXCITATION - EXCITATION
0-5 VDC	RED BLACK WHITE	+ EXCITATION - EXCITATION + SIGNAL
ALL	DRAIN WIRE	SHIELD

MOLDED CABLE SEAL CONFIGURATION FOR POLYURETHANE CABLE

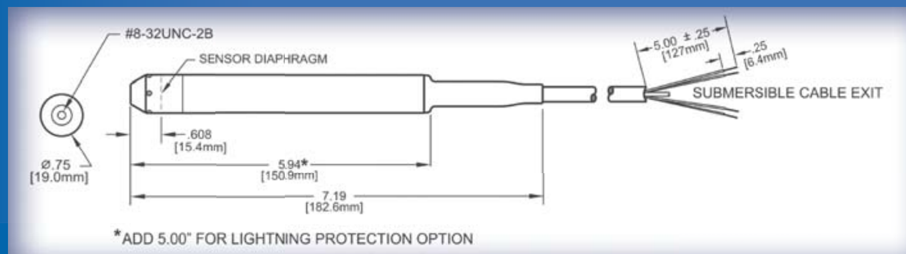

LOOP RESISTANCE VS. POWER SUPPLY

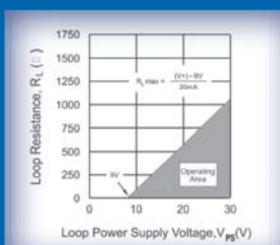

GLAND CABLE SEAL CONFIGURATION FOR ETFE CABLE

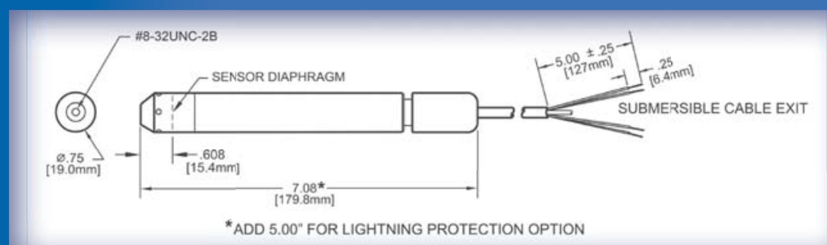

KPSI 320 order information

RECYCLED PAPER

- **MODEL** 320, ±0.25% FSO Static Accuracy
- **MATERIAL** S, Stainless Steel, T, Titanium
- **REFERENCE FORMAT** 1, Vented gage 3, Sealed gage 4, Absolute
- **OUTPUT** 3, 0-5 VDC, F, 0-2.5V G, 0-4V H, 0-10V 4, 4-20 mA
- **PRESSURE CONNECTION (NOSECAP)** B, Ported
- **ELECTRICAL CONNECTION** 0, Molded cable seal A, Gland cable seal
- **LIGHTNING PROTECTION** A, None B, Full Lightning Protection
- **LEVEL RANGE (at MAX output)** # # # • # # #
- **LEVEL RANGE (at MIN output)** # # # • # # #
- **MOISTURE PROTECTION** A, None (sealed/absolute only) B, Vent Filter C, Aneroid Bellows
- **CABLE TYPE** 1, Polyurethane 2, ETFE
- **CABLE LENGTH (in feet)** # # # #
- **LABEL** A, psi B, ft H2O C, m H2O

	MODEL	MATERIAL	REFERENCE FORMAT	OUTPUT	PRESSURE CONNECTION	ELECTRICAL CONNECTION	LIGHTNING PROTECTION	LEVEL RANGE (MAX)	LEVEL RANGE (MIN)	MOISTURE PROTECTION	CABLE TYPE	CABLE LENGTH	LABEL
EXAMPLE	3 2 0	S	1	F	B	0	B	0 0 4 • 3 3 4	0 1 4 • 0 0 0	B	1	0 0 5 5	A

1. The part number requires two level range limits, corresponding to maximum and minimum outputs, to be specified in **pounds per square inch** (psi) to three decimal places. The lower level range is typically 000.000 unless otherwise required. For reverse output requirements, enter the lower range for the maximum output and the upper range for the minimum output. Use the following conversion factors:

ft H2O / 2.3073 = psi Examples: 10 ft H2O / 2.3073 = 4.334 psi (enter 004.334 in the part number)
m H2O / 0.703265 = psi 10m H2O / 0.703265 = 14.219 psi (enter 014.219 in the part number)

2. Contact PSI if private labeling is required.

Warranty: The Series 320 product is warranted against defects in material and workmanship for 2 years from date of shipment. Products not subjected to misuse will be repaired or replaced. THE FOREGOING IS IN LIEU OF ANY OTHER EXPRESSED OR IMPLIED WARRANTIES. We reserve the right to make changes to any product herein and assume no liability arising out of applications **OR USE OF ANY PRODUCT OR CIRCUIT DESCRIBED. PRODUCTS DESCRIBED IN THIS SPECIFICATION ARE NOT INTENDED FOR LIFE SUPPORT APPLICATIONS.**

SPECIFICATION FORM

PROJECT NAME	BY	DATE	REVISION	ICS PROJECT NO
SAND COULEE, MT	SM	08/2014	SUBMITTAL	2848

SPECIFICATION:

DEVICE: INSTRUMENTATION

MANUFACTURER: HEALY-RUFF

MODEL: ROTO-TRAN IV

RANGE / SCALE: 0-100 PSI

INPUT: N/A

OUTPUT: 4-20 MA

QUANTITY:

FEATURES:

INSTRUMENTATION 324300-214

Roto-Tran IV Pressure Transducer

HEALY-RUFF

The enclosed Roto-Tran IV is a pressure transducer that provides a 4-20 mA signal over its labeled pressure range. The Roto-Tran IV comes in six different pressure choices that cover the pressure range from 0 - 300 PSI. This loop powered, temperature compensated device uses a piezo-electric sensing element.

The unit is constructed from 316L stainless steel and carries a NEMA 4X rating. Tank and pipe mounting can be accomplished by its integral, threaded pressure connection.

OPEN

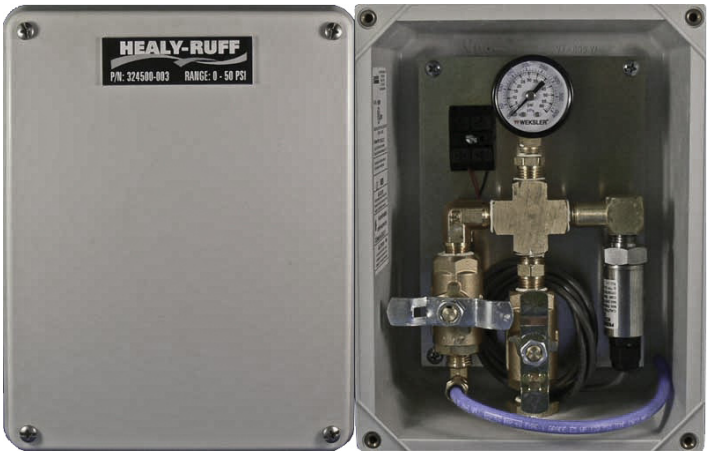

ENCLOSED

SPECIFICATIONS

Service: Compatible gasses and liquids
Wetted Materials: Type 316L Stainless Steel
Accuracy: 1% full scale (Includes linearity, hysteresis, and repeatability)
Temperature Limit: 0 to 200°F (-18 to 93°C)
Compensated Temperature Range: 0 to 175°F (-18 to 79°C)
Thermal Effect: +/-0.04% FS/°F (includes zero and span)
Pressure Limits: see table to the right
Power Requirements: 13 to 30 VDC
Output Signal: 4 to 20 mA
Response Time: 50 msec
Loop Resistance: 0 - 1300 ohms maximum
Current Consumption: 38 mA (maximum)
Electrical Connectioins: 3' of Prewired Cable
Process Connection: 1/4" male NPT
Enclosure Rating: NEMA 4X (IP66)
Mounitng Orientation: Mount in any position
Weight: 10 oz. (283 g)
Agency Approvals: CE

ENCLOSED

A NEMA 4X non-metallic enclosure houses the Roto-Tran IV pressure transducer, block and bleed valve and pressure gauge.

A terminal strip for field wiring is included. The pressure line connection to the block and bleed assembly is through a 1/4" female NPT bulkhead fitting located on the bottom of the enclosure.

ORDERING INFORMATION

PRESSURE RANGE	PART NUMBER
OPEN STYLE	
0-15 PSI (0-35 FT)	324300-211
0-30 PSI (0-69 FT)	324300-212
0-50 PSI (0-116 FT)	324300-213
0-100 PSI (0-231 FT)	324300-214
0-200 PSI (0-462 FT)	324300-215
0-300 PSI (0-693 FT)	324300-220
ENCLOSED	
0-15 PSI (0-35 FT)	324500-001
0-30 PSI (0-69 FT)	324500-002
0-50 PSI (0-116 FT)	324500-003
0-100 PSI (0-231 FT)	324500-004
0-200 PSI (0-462 FT)	324500-005
0-300 PSI (0-693 FT)	324500-006

Catalog No. 01510.5_PDS_130516-ROTO-TRANIV

Instrument Control Systems ICS HEALY-RUFF
Instrument Control Systems, Inc. • 13005 16th Ave N., Suite 100 Plymouth, MN 55441 • Tel: (763) 559-0568
© 2012 ICS Healy-Ruff. All rights reserved. **www.icshealyruff.com**

SPECIFICATION FORM

PROJECT NAME	BY	DATE	REVISION	ICS PROJECT NO
SAND COULEE, MT	SM	08/2014	SUBMITTAL	2848

SPECIFICATION:

DEVICE: VPN ETHERNET ROUTER/FIREWALL

MANUFACTURER: CISCO

MODEL: ASA5505-UL-BUN-K9

RANGE / SCALE: N/A

INPUT: ETHERNET

OUTPUT: ETHERNET

QUANTITY:

FEATURES:

VPN ETHERNET ROUTER/FIREWALL ASA5505-UL-BUN-K9

Accurate inline prevention technologies provide unparalleled confidence to take preventive action on a broader range of threats without the risk of dropping legitimate traffic. These unique technologies offer intelligent, automated, contextual analysis of data and help ensure that businesses are getting the most out of their intrusion prevention solutions. Furthermore, the IPS SSP, AIP SSM, and AIP SSC use multivector threat identification to protect the network from policy violations, vulnerability exploitations, and anomalous activity through detailed inspection of traffic in Layers 2 through 7.

Table 2 details the AIP SSM and AIP SSC models that are available, and their respective performance and physical characteristics.

Table 2. Characteristics of Cisco ASA 5500 Series AIP SSM and AIP SSC Models

Feature	Cisco ASA 5500 Series AIP-SSC-5	Cisco ASA 5500 Series AIP-SSM-10	Cisco ASA 5500 Series AIP-SSM-20
Concurrent Threat Mitigation Throughput (Firewall + IPS Services)	75 Mbps with Cisco ASA 5505	150 Mbps with Cisco ASA 5510	300 Mbps with Cisco ASA 5510
Technical Specifications			
Memory	512 MB	1 GB	2 GB
Flash	512 MB	256 MB	256 MB
Environmental Operating Ranges			
Operating			
Temperature	32 to 104ºF (0 to 40ºC)		
Relative Humidity	5 to 95 percent noncondensing		
Nonoperating			
Temperature	–13 to 158ºF (–25 to 70ºC)		
Power Consumption	30W maximum	90W maximum	
Physical Specifications			
Dimensions (H x W x D)	0.68 x 3.55 x 5.2 in. (1.73 x 9.02 x 13.21 cm)	1.70 x 6.80 x 12.25 in. (4.32 x 17.27 x 31.12 cm)	
Weight (with Power Supply)	0.42 lb (0.19 kg)	3.00 lb (1.36 kg)	
Regulatory and Standards Compliance			
Safety	UL 60950, CSA C22.2 No. 60950, EN 60950 IEC 60950, AS/NZS60950		
Electromagnetic Compatibility (EMC)	CE marking, FCC Part 15 Class A, AS/NZS CISPR22 Class A, VCCI Class A, EN55022 Class A, CISPR22 Class A, EN61000-3-2, EN61000-3-3		

Cisco ASA 5500 Series Content Security and Control Module

The Cisco ASA 5500 Series CSC SSM delivers industry-leading threat protection and content control at the Internet edge, providing comprehensive antivirus, antispyware, file blocking, antispam, antiphishing, URL blocking and filtering, and content filtering services in an easy-to-manage solution. The CSC SSM bolsters the Cisco ASA 5500 Series' strong security capabilities, providing customers with additional protection of and control over the content of their business communications. The module provides additional flexibility and choice over the functioning and deployment of Cisco ASA 5500 Series firewalls. Licensing options enable organizations to customize the features and capabilities to each group's needs, with features that include advanced content services and increased user capacity. The CSC SSM ships with a default feature set that provides antivirus, antispyware, and file blocking services.

© 2013 Cisco and/or its affiliates. All rights reserved. This document is Cisco Public Information.

water and wastewater control solutions
Instrument Control Systems ICS HEALY-RUFF
csia CERTIFIED
13005 16TH AVE. NORTH • SUITE 100 • PLYMOUTH MN 55441
PHONE: (763) 559-0568 • FAX: (763) 559-2187
www.icshealyruff.com

ENGINEERING • INSTALLATION • SERVICE

TAB 4

SPECIFICATION FORM

PROJECT NAME	BY	DATE	REVISION	ICS PROJECT NO
SAND COULEE, MT	SM	08/2014	SUBMITTAL	2848

SPECIFICATION:

DEVICE: UNINTERRUPTIBLE POWER SUPPLY

MANUFACTURER: POWERWARE

MODEL: PW9130

RANGE / SCALE: 2000VA

INPUT: 120VAC

OUTPUT: 120VAC

QUANTITY:

FEATURES:

UNINTERRUPTIBLE POWER SUPPLY PW9130L2000T-XL

Eaton 9130 UPS

2008 INTERNET TELEPHONY PRODUCT OF THE YEAR

Features

- Protects against downtime, data loss and process interruption by providing continuous, clean power
- Offers premium performance with a 0.9 power factor and >95 percent efficiency in high efficiency mode
- Increases battery service life and system uptime with ABM® battery charging technology
- Enables prolonged runtime of essential equipment during power outages by allowing for orderly, remote shutdown of non-critical systems or processes
- Provides installation flexibility with a choice of rack or tower designs, both conserving valuable space
- Ensures data and system integrity with LanSafe® power management software
- Provides a two-year limited warranty, an extended warranty, on-site Flex™ and on-site PowerTrust™ service contracts, and a $250,000 load protection guarantee (US and Canada)

Product snapshot

Product rating:	700 to 3000 VA
Voltage	120 Vac, 208–240V
Frequency:	50/60 Hz (auto-sensing)
Configuration:	Rackmount or tower

Advanced power protection for:

- IT and networking environments
- Servers, networking gear
- Telecommunications, VoIP, security systems
- Medical systems
- Diagnostics and medical screening
- Patient record archives
- Manufacturing systems
- Chip fabrication
- Pharmaceutical production
- Chemical processing

The **Eaton® 9130 UPS**, resolves utility power problems and delivers superior power protection for IT and networking equipment, medical systems, manufacturing process control—or anywhere critical equipment and applications require clean, continuous power.

Every organization is concerned about being "green," saving energy, cutting costs. The 9130 makes the best use of every utility dollar. It runs efficiently, dissipates less heat and saves thousands of dollars a year in power and cooling.

Double-conversion design for superior power protection

The 9130 is constantly monitoring power conditions—regulating both voltage and frequency. Even when presented with the most severe power problems, this UPS's output remains within three percent of nominal voltage.

With a wide input voltage range, the 9130 does not depend on batteries to smooth out minor power fluctuations. Batteries are conserved for those times when utility power is highly unstable or completely out. If an outage occurs, the 9130 transfers to battery with zero interruption in power, making this an ideal UPS for sensitive and critical equipment.

Powering Business Worldwide

More real power for less cost

More real power. High 0.9 output power factor enables the 9130 to provide its full power capability to modern IT equipment that may have a wide range of leading and lagging power factors. With a 0.99 input power factor, this UPS avoids the disturbances that some energy converters tend to cause.

High efficiency. The more efficient the UPS, the lower your utility and cooling bills. Even a small increase in efficiency can quickly translate into thousands of dollars. When power conditions are within acceptable limits, the 9130 can operate in a remarkable high-efficiency mode: 95 percent efficient or higher.

Advanced design and self-monitoring for premium availability

The 9130 continually monitors voltage, temperature, internal element functions, battery health, battery state-of-charge and runtime remaining. If the UPS detects a potential problem with any of these measures, it sends alarms or takes corrective action, with no interruption in power. At the end of an alarm condition, the 9130 automatically reverts from bypass to normal operation.

Stronger, longer battery life with exclusive ABM technology

Most UPS manufacturers on the market today employ a constant 'trickle-charging' system, which can ultimately reduce potential battery service life by as much as 50 percent. In contrast, ABM technology uses sophisticated sensing circuitry and an innovative three-stage charging technique that significantly extends UPS batteries' useful service life while optimizing their recharge time.

The 9130 provides up to 60 days' notice of the end of useful battery service life. You have ample time to hot-swap batteries without ever having to shut down connected equipment.

External battery modules for extended runtime

During a power outage, internal batteries in the 9130 keep loads running long enough to gracefully shut down systems. Add more runtime at any time, with up to four external battery modules to run systems for hours if necessary. These battery modules are hot-swappable and can be replaced at any time without powering down the UPS or protected loads. You can also start up the UPS and power its loads with battery power.

Battery runtimes

Rack models

Load (VA/Watts)	Internal batteries	w/1 EBM	w/2 EBM	w/3 EBM	w/4 EBM
PW9130L700R-XL2U					
700/490	14	55	102	148	175
525/368	20	77	140	179	239
350/245	32	124	189	282	414
175/123	64	200	395	552	739
PW9130L1000R-XL2U					
1000/700	10	40	73	108	149
750/525	13	58	101	152	219
500/350	24	85	172	249	304
250/175	48	190	310	451	569
PW9130G1000R-XL2U / XL2UEU / PW9130i1000R-XL2U					
1000/700	10	40	78	110	150
750/525	13	55	103	151	223
500/350	22	82	186	250	312
250/175	47	190	328	431	584
PW9130L1500R-XL2U					
1500/1050	7	34	63	88	135
1125/788	11	44	84	129	210
750/525	18	79	148	207	267
375/263	38	167	278	475	540
PW9130i1500R-XL2U					
1500/1050	7	32	61	98	128
1125/788	11	47	83	126	195
750/525	18	81	143	208	262
375/263	38	171	298	416	564
PW9130L2000R-XL2U					
2000/1400	9	45	86	124	163
1500/1050	14	66	115	165	225
1000/700	26	101	185	251	343
500/350	52	197	353	481	629

Rack models (cont.)

Load (VA/Watts)	Internal batteries	w/1 EBM	w/2 EBM	w/3 EBM	w/4 EBM
PW9130G2000R-XL2U / PW9130G2000R-XL2UEU / PW9130i2000R-XL2U					
2000/1400	9	46	83	118	163
1500/1050	13	64	118	170	221
1000/700	25	95	190	242	345
500/350	53	205	346	488	625
PW9130L2500R-XL2U					
2500/2250	7	31	59	87	119
1875/1688	10	43	81	121	154
1250/1125	17	65	120	163	203
625/563	40	145	228	363	491
PW9130G2500R-XL2U / PW9130G2500R-XL2UEU					
2500/2250	7	31	59	87	119
1875/1688	10	43	81	121	154
1250/1125	17	65	120	163	203
625/563	40	145	228	363	491
PW9130L3000R-XL2U					
3000/2100	5	25	48	72	100
2250/1575	8	37	72	102	137
1500/1050	13	60	100	165	223
750/525	34	138	228	326	438
PW9130G3000R-XL2U / PW9130G3000R-XL2UEU / PW9130i3000R-XL2U					
3000/2100	6	25	45	68	96
2250/1575	8	34	70	96	130
1500/1050	14	62	92	156	211
750/525	34	130	212	355	442

Note:

Backup times are approximate and may vary with equipment, configuration, battery age, temperature, etc.
Runtimes are shown at a 0.7 power factor.

Tower models

Load (VA/Watts)	Internal batteries	w/1 EBM	w/2 EBM	w/3 EBM	w/4 EBM
PW9130L700T					
700/490	8	N/A	N/A	N/A	N/A
525/368	12	N/A	N/A	N/A	N/A
350/245	21	N/A	N/A	N/A	N/A
175/123	37	N/A	N/A	N/A	N/A
PW9130i700T					
700/490	8	N/A	N/A	N/A	N/A
525/368	12	N/A	N/A	N/A	N/A
350/245	19	N/A	N/A	N/A	N/A
175/123	35	N/A	N/A	N/A	N/A
PW9130L1000T-XL					
1000/700	10	40	73	108	149
750/525	13	58	101	152	219
500/350	24	85	172	249	304
250/175	48	190	310	451	569
PW9130G1000T-XL / XLEU / PW9130i1000T-XL					
1000/700	10	40	78	110	150
750/525	13	55	103	151	223
500/350	22	82	186	250	312
250/175	47	190	328	431	584
PW9130L1500T-XL					
1500/1050	7	34	63	88	135
1125/788	11	44	84	129	210
750/525	18	79	148	207	267
375/263	38	167	278	475	540

Tower models (cont.)

Load (VA/Watts)	Internal batteries	w/1 EBM	w/2 EBM	w/3 EBM	w/4 EBM
PW9130i1500T-XL					
1500/1050	7	32	61	98	128
1125/788	11	47	83	126	195
750/525	18	81	143	208	262
375/263	38	171	298	416	564
PW9130L2000T-XL					
2000/1400	15	61	111	156	194
1500/1050	21	81	145	184	269
1000/700	34	129	198	293	410
500/350	72	225	449	590	766
PW9130G2000T-XL / XLEU / PW9130i2000T-XL					
2000/1400	15	61	111	156	186
1500/1050	21	81	145	184	248
1000/700	34	129	198	293	431
500/350	72	225	449	590	840
PW9130L3000T-XL					
3000/2100	9	35	66	95	132
2250/1575	13	53	100	139	183
1500/1050	22	86	153	221	267
750/525	69	168	298	395	545
PW9130G3000T-XL / XLEU / PW9130i3000T-XL					
3000/2100	9	36	68	101	137
2250/1575	12	49	90	134	165
1500/1050	20	79	143	180	240
750/525	46	161	267	434	547

Note:

Backup times are approximate and may vary with equipment, configuration, battery age, temperature, etc.
Runtimes are shown at a 0.7 power factor.

Maximum battery run-time for critical systems

Using LanSafe power management software, you can independently control load segments, which are groups of receptacles on the rear panel of the UPS. This feature enables you to manage scheduled shutdowns and sequential startups of protected loads. During a power outage, you could shut down power to non-critical devices, thereby extending battery backup time available for critical devices. You can also use this feature to remotely re-boot locked-up equipment.

Flexible deployment and communication options

One platform, two form factors, dozens of choices. Up to 3000 VA of UPS power is packed into only 2U of rack space. The tower option is about the size of a modern, compact PC, occupying only 1.5 square feet or less of footprint. Choose from dozens of models offering the input plug type and output receptacles that suit your needs and voltage.

Monitor and manage the UPS from anywhere. Connectivity options are available for almost any networking environment. The standard unit comes with USB and RS-232 serial communication ports. You can customize your UPS by adding BestDock interface options for other types of communications, such as to:

- Control and monitor UPS status and meters via SNMP or a Web browser
- Monitor and shut down multiple servers with different operating systems
- Send relay-contact alarm notifications to remote security systems

Intuitive, visual UPS monitoring and management

Local. An on-site user can configure and monitor many features of the 9130 using a large, bright, backlit display with easy navigation—available in multiple languages. LEDs provide at-a-glance insight into system status.

Remote. The 9130 comes complete with the LanSafe suite of power management software that provides control and visibility over all your UPS systems, using an intuitive, graphical interface and SNMP.

From a central vantage point, you have the visibility and control you need to ensure continuous up-time. For example, you can establish a prioritized shutdown of network devices and client/server applications, test all networked UPS systems from one node, analyze trends and network conditions, and stay informed of power problems by pager and e-mail.

The LanSafe software package also includes multimedia demonstrations and a free trial for you to explore optional software for UPS performance monitoring/analysis and facility/data-center management.

Enhance your UPS with complementary options

Count on Eaton for comprehensive power quality and infrastructure solutions. You can complement your 9130 with options that create a more effective, manageable and resilient data center or facility. For example:

- A **maintenance bypass** enables power to completely bypass the UPS, so it can be safely serviced or replaced without powering down critical systems.
- Rugged and attractive **enclosures** provide well-organized rack space for data centers, wiring closets, office environments and warehouses.
- **Power distribution units** streamline the distribution of power throughout a data center, rack or enclosure.
- **Monitoring systems**, such as LanSafe, give you the insight to effectively manage the facility and its power infrastructure for maximum uptime.
- **Support services**, such as our eNotify remote monitoring, ensure that your power infrastructure is intelligently designed, continuously monitored and managed for always-on operations.

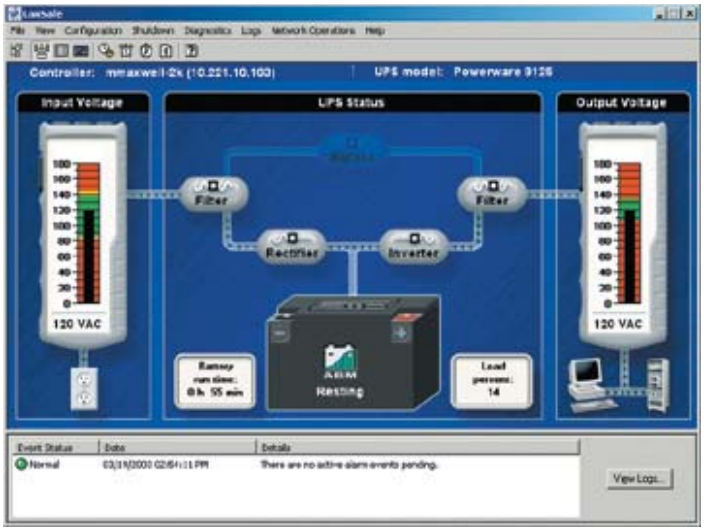

LanSafe answers network administrators' key questions with an intuitive visual display.

Is input voltage within the acceptable range?

If the power went out, how long could the UPS run on battery power?

Is the UPS running on battery power right now?

Are there any active events I need to know about?

Is the UPS online or in bypass mode?

Is output voltage within acceptable limits?

What percent of UPS capacity is being used right now?

Is the battery being charged or discharged?

Eaton, your trusted ally for power quality

Representing more than 40 years of R&D excellence, the new 9130 delivers more real *power*—so you can power through any disruption and keep your organization's critical systems protected reliably and efficiently. Eaton will be there with you for the long term with premium warranty coverage and expert technical support.

When you want maximum peace of mind, count on Eaton's eNotify Remote Monitoring service. With this 7x24 service, our Customer Reliability Center (CRC) remotely monitors your UPS and contacts you in case of an emergency.

To find out more about the 9130 and other Eaton power quality solutions, visit our Web site at www.powerware.com/9130 or contact us at 1.800.356.5794.

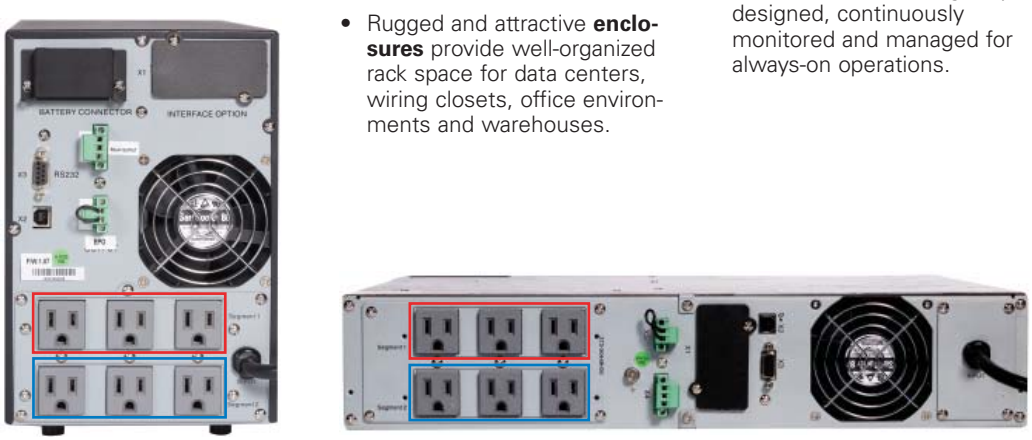

Choose from various back panel configurations in either rack or tower models—all offer load segmentation.

Rack models

Catalog number	Style number	Rating (VA/Watts)	Input connection[1]	Output receptacles	Dimensions H x W x D, in (mm)[2]	Weight, lb (kg)
North American rack models: 120V, 50/60 Hz						
PW9130L700R-XL2U	103006447-6591	700/630	5-15P	(6) 5-15R	3.4 x 17.2 x 17.7 (87 x 438 x 450)	35.3 (16.0)
PW9130L1000R-XL2U	103006448-6591	1000/900	5-15P	(6) 5-15R	3.4 x 17.2 x 17.7 (87 x 438 x 450)	35.3 (16.0)
PW9130L1500R-XL2U	103006449-6591	1500/1350	5-15P	(6) 5-15R	3.4 x 17.2 x 17.7 (87 x 438 x 450)	43.0 (19.5)
PW9130L2000R-XL2U	103006450-6591	2000/1800	5-20P	(6) 5-15/20R, (1) L5-20R	3.4 x 17.2 x 23.6 (87 x 438 x 600)	63.9 (29.0)
PW9130L2500R-XL2U	103006451-6591	2500/2250	L5-30P	(6) 5-15/20R, (1) L5-30R	3.4 x 17.2 x 23.6 (87 x 438 x 600)	65.0 (29.5)
PW9130L3000R-XL2U	103006452-6591	3000/2700	L5-30P	(6) 5-15/20R, (1) L5-30R	3.4 x 17.2 x 23.6 (87 x 438 x 600)	65.0 (29.5)
Global rack models: 208V, 50/60 Hz						
PW9130G1000R-XL2U	103006461-6591	1000/900	L6-20P[3]	(1) L6-20R, (2) 6-20R	3.4 x 17.2 x 17.7 (87 x 438 x 450)	35.3 (16.0)
PW9130G2000R-XL2U	103006462-6591	2000/1800	L6-20P[3]	(1) L6-20R, (4) 6-20R	3.4 x 17.2 x 23.6 (87 x 438 x 600)	63.9 (29.0)
PW9130G2500R-XL2U	103006453-6591	2500/2250	L6-20P[4]	(1) L6-30R, (1) L6-20R, (2) 6-20R	3.4 x 17.2 x 23.6 (87 x 438 x 600)	65.0 (29.5)
PW9130G3000R-XL2U	103006454-6591	3000/2700	L6-20P[4]	(1) L6-30R, (1) L6-20R, (2) 6-20R	3.4 x 17.2 x 23.6 (87 x 438 x 600)	65.0 (29.5)
PW9130G1000R-XL2UEU	103006480-6591	1000/900	L6-20P[3]	(6) C13	3.4 x 17.2 x 17.7 (87 x 438 x 450)	35.3 (16.0)
PW9130G2000R-XL2UEU	103006481-6591	2000/1800	L6-20P[3]	(8) C13, (1) C19	3.4 x 17.2 x 23.6 (87 x 438 x 600)	63.9 (29.0)
PW9130G2500R-XL2UEU	103006482-6591	2500/2250	L6-20P[4]	(8) C13, (1) C19	3.4 x 17.2 x 23.6 (87 x 438 x 600)	65.0 (29.5)
PW9130G3000R-XL2UEU	103006483-6591	3000/2700	L6-20P[4]	(8) C13, (1) C19	3.4 x 17.2 x 23.6 (87 x 438 x 600)	65.0 (29.5)
International rack models: 230V, 50/60 Hz						
PW9130i1000R-XL2U	103006455-6591	1000/900	C14	(6) C13	3.4 x 17.2 x 17.7 (87 x 438 x 450)	35.3 (16.0)
PW9130i1500R-XL2U	103006456-6591	1500/1350	C14	(6) C13	3.4 x 17.2 x 17.7 (87 x 438 x 450)	43.0 (19.5)
PW9130i2000R-XL2U	103006457-6591	2000/1800	C14	(8) C13, (1) C19	3.4 x 17.2 x 23.6 (87 x 438 x 600)	63.9 (29.0)
PW9130i3000R-XL2U	103006463-6591	3000/2700	C20	(8) C13, (1) C19	3.4 x 17.2 x 23.6 (87 x 438 x 600)	65.0 (29.5)
Rack extended battery modules						
PW9130N1000R-EBM2U[5]	103006458-6591	NA	NA	NA	3.4 x 17.2 x 17.7 (87 x 438 x 450)	48.7 (22.1)
PW9130N1500R-EBM2U[6]	103006459-6591	NA	NA	NA	3.4 x 17.2 x 17.7 (87 x 438 x 450)	62.0 (28.1)
PW9130N3000R-EBM2U[7]	103006460-6591	NA	NA	NA	3.4 x 17.2 x 23.6 (87 x 438 x 600)	90.6 (41.1)

Tower models

Catalog number	Style number	Rating (VA/Watts)	Input connection	Output receptacles	Dimensions H x W x D, in (mm)	Weight, lb (kg)
North American tower models: 120V, 50/60 Hz						
PW9130L700T	103006426-6591	700/630	5-15P	(6) 5-15R	9.1 x 6.3 x 13.8 (230 x 160 x 350)	26.9 (12.2)
PW9130L1000T-XL	103006427-6591	1000/900	5-15P	(6) 5-15R	9.1 x 6.3 x 15.0 (230 x 160 x 380)	32.0 (14.5)
PW9130L1500T-XL	103006428-6591	1500/1350	5-15P	(6) 5-15R	9.1 x 6.3 x 16.9 (230 x 160 x 430)	41.9 (19.0)
PW9130L2000T-XL	103006429-6591	2000/1800	5-20P	(1) L5-20R, (4) 5-15/20R	12.8 x 8.4 x 16.1 (325 x 214 x 410)	76.1 (34.5)
PW9130L3000T-XL	103006430-6591	3000/2700	L5-30P	(4) 5-15/20R, (1) L5-30R	12.8 x 8.4 x 16.1 (325 x 214 x 410)	76.1 (34.5)
Global tower models: 208V, 50/60 Hz						
PW9130G1000T-XL	103006431-6591	1000/900	L6-20P[3]	(1) L6-20R, (2) 6-20R	9.1 x 6.3 x 15.0 (230 x 160 x 380)	32.0 (14.5)
PW9130G2000T-XL	103006432-6591	2000/1800	L6-20P[3]	(1) L6-20R, (4) 6-20R	12.8 x 8.4 x 16.1 (325 x 214 x 410)	76.1 (34.5)
PW9130G3000T-XL	103006446-6591	3000/2700	L6-20P[4]	(1) L6-30R, (1) L6-20R, (2) 6-20R	12.8 x 8.4 x 16.1 (325 x 214 x 410)	76.1 (34.5)
PW9130G1000T-XLEU	103006477-6591	1000/900	L6-20P[3]	(6) C13	9.1 x 6.3 x 15.0 (230 x 160 x 380)	32.0 (14.5)
PW9130G2000T-XLEU	103006478-6591	2000/1800	L6-20P[3]	(8) C13, (1) C19	12.8 x 8.4 x 16.1 (325 x 214 x 410)	76.1 (34.5)
PW9130G3000T-XLEU	103006479-6591	3000/2700	L6-20P[4]	(8) C13, (1) C19	12.8 x 8.4 x 16.1 (325 x 214 x 410)	76.1 (34.5)
International tower models: 230V, 50/60 Hz						
PW9130i700T-XL	103006433-6591	700/630	C14	(6) C13	9.1 x 6.3 x 13.8 (230 x 160 x 350)	26.9 (12.2)
PW9130i1000T-XL	103006434-6591	1000/900	C14	(6) C13	9.1 x 6.3 x 15.0 (230 x 160 x 380)	32.0 (14.5)
PW9130i1500T-XL	103006435-6591	1500/1350	C14	(6) C13	9.1 x 6.3 x 16.9 (230 x 160 x 430)	41.9 (19.0)
PW9130i2000T-XL	103006436-6591	2000/1800	C14	(8) C13, (1) C19	12.8 x 8.4 x 16.1 (325 x 214 x 410)	76.1 (34.5)
PW9130i3000T-XL	103006437-6591	3000/2700	C20	(8) C13, (1) C19	12.8 x 8.4 x 16.1 (325 x 214 x 410)	76.1 (34.5)
Tower extended battery modules						
PW9130N1000T-EBM[5]	103006438-6591	NA	NA	NA	9.1 x 6.3 x 15.0 (230 x 160 x 380)	40.8 (18.5)
PW9130N1500T-EBM[6]	103006439-6591	NA	NA	NA	9.1 x 6.3 x 16.9 (230 x 160 x 430)	53.6 (24.3)
PW9130N3000T-EBM[7]	103006440-6591	NA	NA	NA	12.8 x 8.4 x 16.1 (325 x 214 x 410)	110.3 (50.0)

[1] Input cord length is 6 ft
[2] Rack models occupy 2U of rack space and fit into 19-inch racks
[3] C14, w/detachable L6-20P
[4] C20, w/detachable L6-20P
[5] This EBM works with 700/1000 VA models, where available
[6] This EBM works with 1500 VA model
[7] This EBM works with 2000/2500/3000 VA models, where available

Additional notes:

When high voltage 9130 is used at 208V, derate power by 10%, and 20% at 200V

When low voltage 9130 is used at 110V, derate power by 10%, and 20% at 100V

Technical specifications[1]

General	
User interface	Graphical LCD with blue backlight and text in English, French, German, Russian and Spanish
LEDs	Four status-indicating LEDs
Topology	True online, double-conversion
Diagnostics	Full system self-test
UPS bypass	Automatic bypass
Dimensions	See models table
Rail kit	4-post rail kit included with all rackmount units
EBMs	Ship with a rail kit
Remote Emergency Power-off (REPO)	Emergency shutdown control through the REPO port

Electrical input	
Nominal voltage	120V, 208V, 220–240V
Voltage range	120V: 90–138 Vac 208/230V: 160–276 Vac
Power draw of UPS	700: 5.8A @120V, 3.4A @208V, 3.0A @230V 1000: 8.3A @120V, 4.8A @208V, 4.3A @230V 1500: 12.5A @120V, 7.2A @208V, 6.5A @230V 2000: 16.6A @120V, 9.6A @208V, 8.7A @230V 2500: 20.8A @208V, 10.9A @230V 3000: 14.4A @208V, 13.0A @230V
Dedicated circuit breaker rating	**120V:** 700–1500 VA: 15A 2000 VA: 20A 2500–3000 VA: 30A **208/230V:** 700–2000 VA: 10A 3000 VA: 16A
Frequency	50/60 Hz
Frequency range	45–65 Hz

Electrical output	
Power factor	0.9
On utility voltage regulation	±3% of nominal
On battery voltage regulation	±3% of nominal
Efficiency	>95% in high-efficiency mode; >86% in online mode
Frequency regulation	±3% Hz online
Load crest factor	3 to 1
Voltage waveform	Sine wave
Load segments	Two configurable, individually controlled receptacles

Battery	
Battery type	VRLA 12V/9 Ah (both internal and external)
Battery runtime	>3 minutes with internal batteries @100% load
Battery replacement	Hot-swappable internal and external batteries
Start-on-battery	Allows start of UPS without utility input

Communications	
Serial port	RS-232 standard, for interface to power management software
USB port	HID standard, for communicating with Windows 98, XP, ME and Vista computers
Relay output	Common alarm standard
Communications slot	Optional communication slots (BD Slot)
Optional communication cards	SNMP/Web card for direct control and monitoring in SNMP-based networks, monitoring of UPS status and meters through Web browser interface Relay card for integration to industrial environment and building management systems, remote shutdown for IBM AS/400 systems

Environmental	
Safety markings	120/208V: UL, CUL, VCCI 230V: CE, GS
EMC markings	120V: FCC Class B, EN55022 Class B (1.5 kVA and below); FCC Class A, EN55022 Class A (2.0 kVA and above) 230V: CE (per IEC/EN62040-2: Emissions, Category C1; Immunity, Category C2)
Audible noise	<50 dB
Ambient operating temperature	0˚C (32˚F) to +40˚C (104˚F)
Storage temperature	-20˚C (-4˚F) to +40˚C (104˚F) with batteries and -25˚C (-13˚F) to +55˚C (131 ˚F) without batteries
Relative humidity	5–90% non-condensing

Heat dissipation for all voltages: 208–240V and 120V

9130 model	Normal mode, BTUs/hr	On battery, BTUs/hr
700 VA	350	554
1000 VA	500	674
1500 VA	750	1,011
2000 VA	838	1,348
2500 VA	1,047	1,463
3000 VA	1,257	1,755

[1] Due to continuing product improvement programs, specifications are subject to change without notice.

PowerChain Management®

UNITED STATES
8609 Six Forks Road
Raleigh, NC 27615 U.S.A.
Toll Free: 1.800.356.5794

www.eaton.com/powerquality

CANADA
Ontario: 416.798.0112
Toll free: 1.800.461.9166

LATIN AMERICA
Argentina: 54.11.4124.4000
Brazil: 55.11.3616.8500
México: 52.55.9000.5252

EUROPE/MIDDLE EAST/AFRICA
Denmark: 45.3686.7910
Finland: 358.94.52.661
France: 33.1.6012.7400
Germany: 49.0.7841.604.0
Italy: 39.02.66.04.05.40
Norway: 47.23.03.65.50
Portugal: 55.11.3616.8500
Sweden: 46.8.598.940.00
United Kingdom: 44.1753.608.700

ASIA PACIFIC
Australia: 61.2.9693.9366
New Zealand: 64.0.3.343.3314
China: 86.21.6361.5599
HK/Korea/Taiwan: 852.2745.6682
India: 91.11.2649.9414 to 18
Singapore/SEA: 65.6825.1668

Eaton, ABM, Flex, LanSafe, PowerChain Management and PowerTrust are trade names, trademarks, and/or service marks of Eaton Corporation or its subsidiaries and affiliates. All other trademarks are property of their respective owners.

© 2009 Eaton Corporation
All Rights Reserved

Printed in USA
9130FXA
January, 2009

EATON
Powering Business Worldwide

SPECIFICATION FORM

PROJECT NAME	BY	DATE	REVISION	ICS PROJECT NO
SAND COULEE, MT	SM	08/2014	SUBMITTAL	2848

SPECIFICATION:

DEVICE: THERMOSTAT

MANUFACTURER: HOFFMAN

MODEL: ATEMNX

RANGE / SCALE: 30 TO 140 DEGREES F

INPUT: TEMP

OUTPUT: SPST, 15 AMP @ 120VAC

QUANTITY:

FEATURES: DIN RAIL MOUNTED

APPLICATION	CONTACT	PART NUMBER
HEATING (RED)	NORMALLY CLOSED	ATEMNC
COOLING (BLUE)	NORMALLY OPEN	ATEMNO

Temperature Control Switches

Temperature Control Switches (Thermostats)

Application

These easy-to-install thermostats are designed to regulate and monitor air temperature in enclosures that are set up to operate with heaters, fans, filter ventilators, heat exchangers, and/or signal transmitters. Thermostat ATEMNC is specifically designed for use with heaters (contacts open on temperature rise), while thermostat ATEMNO is designed to control fans, filter ventilators, or for switching signal transmitters in the event of overheating (contacts close on temperature rise). Both thermostats have an adjustable set point range of 30°F to 140°F. An additional label is provided to convert set point range to degrees Celsius. A preset label is also provided to cover the set point range label after the thermostat is put at desired temperature.

When the enclosure reaches the pre-determined set point, temperature contacts in the thermostat are activated and the fan or heater begins to operate. Thermostats prolong the life expectancy of heaters and fans by curtailing their operating hours and also increase the working efficiency of electrical components by exposing them to fewer contaminants from the surrounding environment. Connections consist of tubular screw terminals for AWG 14 (0.04 sq. in.). Provision for both panel mounting and DIN rail mounting. Housing is plastic.

Features

- Labels included:
  - Additional label for conversion to Celsius scale
  - Blank label to cover set point range label when adjustment after initial setting is not desired

Construction

- Bimetal temperature sensor
- Plastic housing
- Connections consist of tubular screw terminals for AWG 14 (0.04 sq. in.)
- Provision for both panel mounting and DIN rail mounting

Finish

Molded Plastic housing is black

Industry Standards

UL94-VO
Protection rating IEC IP30
UL/cUL Component Recognized, File Number E164102
CSA Certified, File Number 215952
CE

Temperature Control Switches (Thermostats)

Catalog Number	Contact Type
ATEMNC	NC (normally closed), quick acting
ATEMNO	NO (normally open), quick acting

Load Rating

Amp	Volts	Contact Type
15	120 AC	Resistive
16	250 AC	Resistive
1	120-250 AC	Inductive
10	12-24 DC	Resistive
1	12-24 DC	Inductive

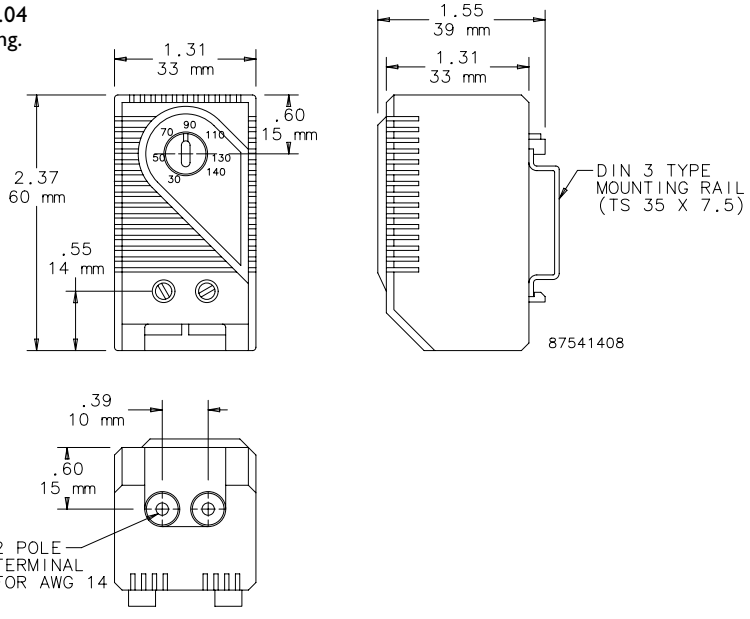

Subject to change without notice
PH 763 422 2211 • FX 763 422 2600 • www.hoffmanonline.com
© 2007 Hoffman Enclosures Inc.

SPECIFICATION FORM

PROJECT NAME	BY	DATE	REVISION	ICS PROJECT NO
SAND COULEE, MT	SM	08/2014	SUBMITTAL	2848

SPECIFICATION:

DEVICE: HEATER FLEXIBLE

MANUFACTURER: WATLOW

MODEL: SILICONE RUBBER

RANGE / SCALE: 4X5 INCH 100W

INPUT: 120V

OUTPUT: 100 WATTS

QUANTITY:

FEATURES:

HEATER FLEXIBLE 040050C1-A001F

Quick Ship • *Same day shipment on stock units with orders received by 11:00 a.m.*

Flexible Heaters

Silicone Rubber

Rugged, yet thin, lightweight and flexible … the use of Watlow silicone rubber heaters is limited only by your imagination. With these heaters, you can put the heat where it's needed and, in the process, improve heat transfer, speed warm-ups and decrease wattage requirements.

Fiberglass-reinforced silicone rubber gives your heater dimensional stability without sacrificing flexibility. Because very little material separates the element from the part, heat transfer is rapid and efficient.

Performance Capabilities

- Operating temperatures to 500°F (260°C)
- Watt densities to 80 W/in^2 (12.5 W/cm^2) dependent upon application temperature
- 0.055 inch (1.4 mm) thick with a wire-wound element; only 0.018 inch (0.5 mm) with an etched foil element

Features and Benefits

- **Designed in the exact shape and size**, including 3-D geometries, to conform to your equipment.
- **More than 80 designs** available immediately from stock.
- **UR®, cUR® and VDE** recognitions are available on many designs.
- **Moisture and chemical-resistant** silicone rubber material provides longer heater life.
- **Easy to bond or attach** to your part through the use of vulcanizing, adhesives, or fasteners.

Applications

- Freeze protection and condensation prevention for many types of instrumentation and equipment
- Medical equipment such as blood analyzers, test tube heaters, etc.
- Computer peripherals such as laser printers
- Curing of plastic laminates
- Photo processing equipment

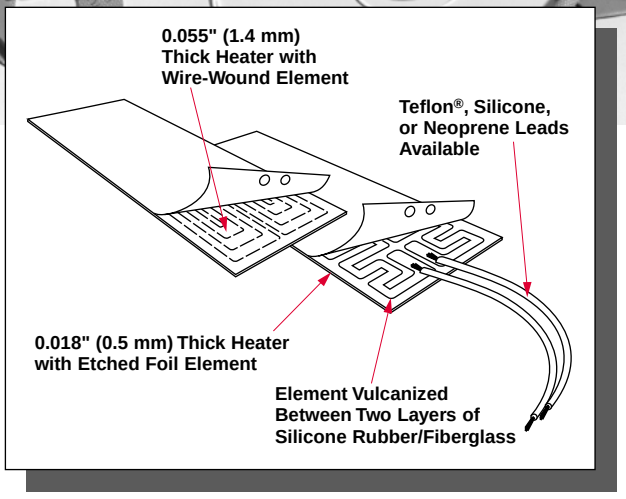

Teflon® is a registered trademark of the E.I. du Pont de Nemours & Company.

UR® and cUR® are registered trademarks of Underwriter's Laboratories, Inc.

Silicone Rubber

Applications and Technical Data

Determining Watt Density

The *Maximum Allowable Watt Density* graph illustrates the maximum recommended heater watt density at various metal part or ambient air temperatures. However, it does not indicate the watt density necessary to achieve a given part temperature. See the *Surface Temperature vs. Time* graph on the next page for assistance with those calculations. When using this graph, remember:

- Part temperature is measured at the point where the heater contacts the metal part.
- Thermostats and on-off controls are typically bimetal or capillary bulb.
- Non-cycling controls are typically solid state, time-proportioning or SCR temperature controllers.
- Watt density values should be derated by one third if insulation is used.
- UL® recognition temperature limits are not detailed.
- Consult Watlow before doing any of the following: selecting high watt density etched-foil elements, or operating heaters with back side insulation or non-metallic parts, which are poor thermal conductors.

Example: A wire-wound heater with non-cycling control at a part temperature of 250°F (120°C) can be rated at 24 W/in² (3.7 W/cm²) maximum. An etched foil heater under the same conditions can be rated at 45 W/in² (7 W/cm²) maximum.

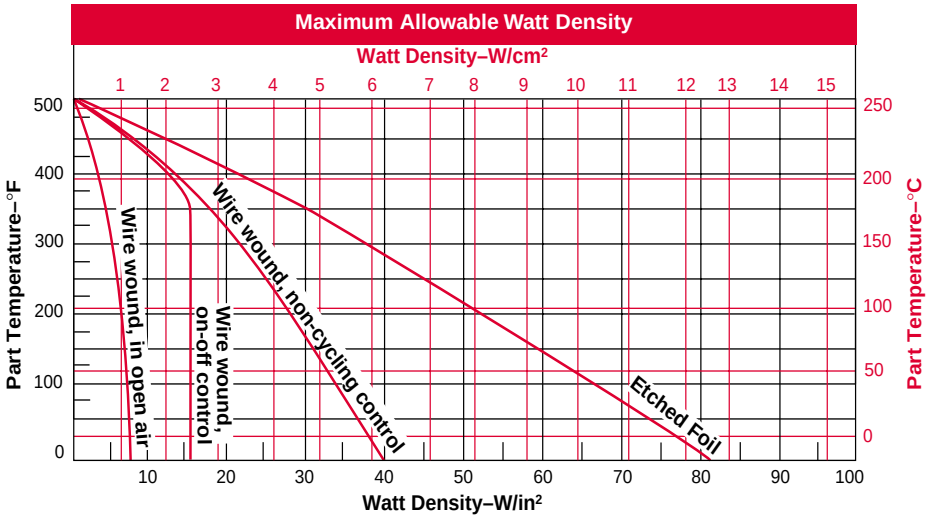

Standard Silicone Rubber Specifications

Maximum width x maximum length:

- Wire wound: 36 x 120 inches (915 mm x 3050 mm)
- Etched foil: 20 x 30 inches (510 mm x 760 mm)

Thickness (standard):

- Wire wound: 0.055 inch (1.4 mm)
- Etched foil: 0.018 inch (0.5 mm)

Weight (standard):

- Wire wound: 8 oz./ft² (0.24 g/cm²)
- Etched foil: 3 oz./ft² (0.09 g/cm²)

Maximum operating temperature: 500°F (260°C)

Maximum temperature for UL® recognition: 428°F (220°C)

Minimum ambient temperature: -80°F (-62°C)

Maximum voltage: 600V~(ac)

Maximum wattage: See watt density graph

Lead size: Sized to load

Lead length: 12 + 1 ½ - ½ inches (305 mm + 40 mm - 15 mm)

Wattage tolerance:

- Wire: ±5 percent
- Foil: +5 percent -10 percent

Dimensional tolerances:

- 0 to 6 inches (0 to 150 mm): ±1/16 inch (1.6 mm)
- 6 to 18 inches (150 to 455 mm): ±⅛ inch (3.2 mm)
- 18 to 36 inches (455 mm to 915 mm): ±3/16 inch (4.8 mm)
- Over 36 inches (915 mm): ±1 percent

Government Supply Code Number
Cage code = 78056

UL® is registered trademark of Underwriter's Laboratories, Inc.

Flexible Heaters

Silicone Rubber

Applications and Technical Data

Continued

Surface Temperature vs. Time

This graph illustrates the surface temperature a silicone rubber heater will reach when the heater is uninsulated and is suspended vertically in 70°F (20°C) still air. This data is based on 0.055 inch (1.4 mm) thick standard construction and is offered as a reference tool.

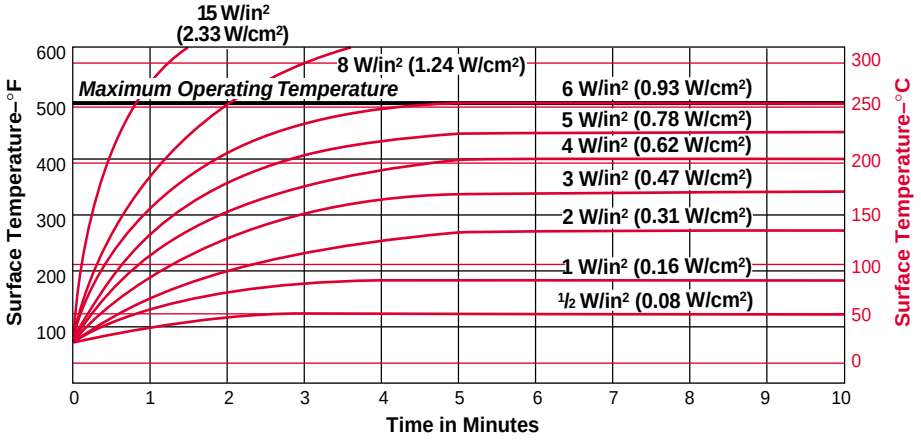

UR®, cUR® and VDE Recognition for Silicone Rubber Heaters

Watlow frequently works with customers requiring agency approvals such as UR®, cUR® and VDE. Many stock silicone rubber heaters are available with one or more of these certifications. **Watlow's technical letter #3**, flexible heaters, provides in-depth information on agency approvals.

UL® Component Recognition (UR) of factory-bonded heaters is available up to 392°F (200°C), and for customer installed heaters up to 428°F (220°C) (UL File No. E52951).

For Canadian recognition Watlow offers **cUR Recognized®** silicone rubber heaters under UL File #E52951. Several constructions are available with ratings to 600V~(ac) and 428°F (220°C) maximum surface temperature. Consult the factory for further information.

VDE Approval is available on several constructions of both wire-wound (File No. 62533) and etched foil (File No. 62535) silicone rubber heaters. The maximum ratings are 440V~(ac) and 428°F (220°C) surface temperature. Under VDE guidelines, minimum installed bend radius is ⅛ inch (3 mm) for etched foil and ¼ inch (6 mm) for wire wound.

VDE also states that the user is responsible for the safe application, installation and wiring of the heaters. Maximum working temperature must be maintained by an appropriate temperature control.

Options

Watlow offers a variety of options such as attachment techniques, thermostats, special leads, holes and cutouts and three-dimensional shapes. These are all described in the introduction to flexible heaters section. In addition, the following option is available only on silicone rubber heaters.

See pages 165 to 168 for more information on options.

Thermal Insulation

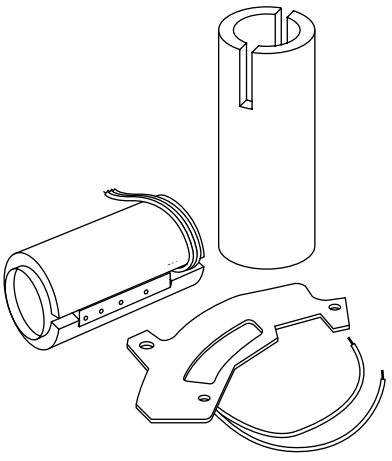

To increase the heating efficiency of your application, silicone rubber heaters can be thermally insulated with silicone sponge rubber, bonded to one side in the following thicknesses: 1/16, ⅛, ¼, ⅜ or ½ inch (1.6, 3, 6, 10 or 13 mm). Heaters with thermal insulation are still quite flexible.

An aluminized surface can be added to the back of the heater to reduce radiated heat losses. This aluminized surface, called "Low Loss Treatment," adds very little to the unit thickness and maintains a very clean appearance.

Silicone Rubber

Wire-Wound Element

Width in (mm)	Length in (mm)	Watts	Availability	120V~(ac) Code No.	240V~(ac) Code No.
1 (25)	2 (50)	10	Stock	**010020C1**	
	3 (75)	15	Stock	**010030C1**	
	4 (100)	20	Stock	**010040C1**	
	5 (125)	25	Stock	**010050C1**	
	5 (125)	25	Stock		**010050C2**
	10 (255)	50	Stock	**010100C1**	
	10 (255)	50	Stock		**010100C2**
	15 (380)	75	Stock	**010150C1**	
	15 (380)	75	Stock		**010150C2**
	20 (510)	100	Stock	**010200C1**	
	20 (510)	100	Stock		**010200C2**
	25 (635)	125	Stock	**010250C1**	
	30 (760)	150	Stock	**010300C1**	
	35 (890)	175	Stock	**010350C1**	
	40 (1015)	200	Stock	**010400C1**	
	80 (2030)	400	Stock	**010800C1**	
	120 (3050)	600	Stock	**010F10C1**①	
2 (50)	2 (50)	20	Stock	**020020C1**	
	5 (125)	50	Stock	**020050C1**	
	5 (125)	50	Stock		**020050C2**
	10 (255)	100	Stock	**020100C1**	
	10 (255)	100	Stock		**020100C2**
	15 (380)	150	Stock	**020150C1**	
	15 (380)	150	Stock		**020150C2**
	20 (510)	200	Stock	**020200C1**	
	20 (510)	200	Stock		**020200C2**
	25 (635)	250	Stock	**020250C1**	
	30 (760)	300	Stock	**020300C1**	
	35 (890)	350	Stock	**020350C1**	
	40 (1015)	400	Stock	**020400C1**	

CONTINUED

① 010**F**10C1 - F = feet (i.e. 10 feet = 120 inches)

Approx. net weight: 8 ounces/ft² (0.24 g/cm²). Standard thickness: 0.055 inch. Standard lead length: 12 inches UL 1180 Teflon®.
Silicone rubber wire-wound elements rated at 5 W/in².
UL® Component Recognition (UR®).

How to Order

To order stock silicone rubber heaters, specify the Watlow code number and the quantity. To order a heater with options, specify the code number, quantity and options desired **(see page 165)**. Consult Watlow before combining options.

Made-to-Order: Consult factory.

For **made-to-order** units, Watlow will need the following application information from you:

- Size (dimensions)
- Voltage
- Wattage/watt density
- Operating temperature
- Options (leads, thermostats, attachment techniques, etc.)
- Will heater be subject to flexing?
- Element type, if you have a preference
- Agency approvals
- Quantity

Availability

Stock: Same day shipment of orders received by 11:00 a.m. CST.

Stock with Options: Shipment in five working days or less. Not all options are available with stock heaters.

Flexible Heaters

Silicone Rubber

Wire-Wound Element

Width in (mm)	Length in (mm)	Watts	Availability	120V~(ac) Code No.	240V~(ac) Code No.
3 (75)	3 (75)	45	Stock	**030030C1**	
	5 (125)	75	Stock	**030050C1**	
	5 (125)	75	Stock		**030050C2**
	10 (255)	150	Stock	**030100C1**	
	10 (255)	150	Stock		**030100C2**
	15 (380)	225	Stock	**030150C1**	
	15 (380)	225	Stock		**030150C2**
	20 (510)	300	Stock	**030200C1**	
	20 (510)	300	Stock		**030200C2**
	25 (635)	375	Stock	**030250C1**	
	30 (760)	450	Stock	**030300C1**	
	35 (890)	525	Stock	**030350C1**	
	40 (1015)	600	Stock	**030400C1**	
4 (100)	4 (100)	80	Stock	**040040C1**	
	5 (125)	100	Stock	**040050C1**	
	5 (125)	100	Stock		**040050C2**
	10 (255)	200	Stock	**040100C1**	
	10 (255)	200	Stock		**040100C2**
	15 (380)	300	Stock	**040150C1**	
	15 (380)	300	Stock		**040150C2**
	20 (510)	400	Stock	**040200C1**	
	20 (510)	400	Stock		**040200C2**
	25 (635)	500	Stock	**040250C1**	
	30 (760)	600	Stock	**040300C1**	
	35 (890)	700	Stock	**040350C1**	
	40 (1015)	800	Stock	**040400C1**	
5 (125)	5 (125)	125	Stock	**050050C1**	
	5 (125)	125	Stock		**050050C2**
	10 (255)	250	Stock	**050100C1**	
	10 (255)	250	Stock		**050100C2**
	15 (380)	375	Stock	**050150C1**	
	15 (380)	375	Stock		**050150C2**
	20 (510)	500	Stock	**050200C1**	
	20 (510)	500	Stock		**050200C2**
	25 (635)	625	Stock	**050250C1**	
	30 (760)	750	Stock	**050300C1**	
	35 (890)	875	Stock	**050350C1**	
	40 (1015)	1000	Stock	**050400C1**	
6 (150)	5 (125)	150	Stock	**060050C1**	
	5 (125)	150	Stock		**060050C2**
	10 (255)	300	Stock	**060100C1**	
	10 (255)	300	Stock		**060100C2**
	15 (380)	450	Stock	**060150C1**	
	15 (380)	450	Stock		**060150C2**
	20 (510)	600	Stock	**060200C1**	
	20 (510)	600	Stock		**060200C2**
	25 (635)	750	Stock	**060250C1**	
	30 (760)	900	Stock	**060300C1**	
	35 (889)	1050	Stock	**060350C1**	
	40 (1016)	1200	Stock	**060400C1**	

Approx. net weight: 8 ounces/ft² (0.24 g/cm²). Standard thickness: 0.055 inch. Standard lead length: 12 inches UL 1180 Teflon®. Silicone rubber wire-wound elements rated at 5 W/in². UL® Component Recognition (UR®).

Flexible Heaters

Silicone Rubber

Wire-Wound Stock Heater Coding Configured Options

How to order

To order, complete the code number with the information below:

Wire wound (p. 172-173)

0_ _ _ _ _ _ _ **-** _ _ _ _ _

Modification Options

0 = None
A = PSAS Bottom
B = PSAS Top
E = With Plate. Heater on Side Opposite Flange
F = With Plate. Heater on Flange Side
G = Flaps + Grommets
H = Flaps + Boot Hooks
J = Flaps + Latch Fasteners
K = PSAS and Low Loss
L = Low Loss
M = Low Loss + Flaps + Grommets
N = Low Loss + Flaps + Boot Hooks
P = Low Loss + Flaps + Latch Fasteners
R = 1/16 inch Sponge
S = 1/8 inch Sponge
T = 1/4 inch Sponge
U = 3/8 inch Sponge
V = 1/2 inch Sponge
W = PSAS + 1/16 inch Sponge
Y = PSAS + 1/8 inch Sponge
1 = PSAS + 1/4 inch Sponge
2 = PSAS + 3/8 inch Sponge
3 = PSAS + 1/2 inch Sponge
4 = Tip Plugs
6 = Tip Plugs/PSAS

- Heaters with flaps must be minimum 10 inches long.

Sensors

Type	LOC	WIR
0 = None		
L = T10	STD	STD
M = T10	STD	ALT
N = T10	ALT	STD
P = T10	ALT	ALT
R = T207	STD	STD
S = T207	STD	ALT
T = T207	ALT	STD
U = T207	ALT	ALT
V = T207E	on heater	STD
W = T207E	Remote	STD
Y = B200	STD	STD
1 = B200	STD	ALT
2 = B200	ALT	STD
3 = B200	ALT	ALT
4 = JSTD	STD	STD
6 = JALT	STD	STD
7 = KSTD	STD	STD

- For thermostats, standard location is as shown in catalog; standard wiring is integral or series with the heater; alternate location is rotated parallel with heater width; alternate wiring is separate leads for pilot control.
- For thermocouples, J standard is Teflon® insulation; J alternate is fiberglass insulation; K standard is fiberglass insulation.

T10 Set °F*

0 = None
A = 125
B = 150
E = 175
F = 200
G = 225
H = 250
J = 275
K = 300

T207 Set °F*

0 = None
1 = 40/55
2 = 60/75
3 = 95/110
4 = 145/1600

B200 Set °F*

0 = None
2 = 500
3 = 330

T/C Length

0 = None
A = 8 in
B = 12 in
E = 18 in
F = 24 in
G = 30 in
H = 36 in
J = 40 in
K = 4 ft
L = 5 ft
M = 6 ft
N = 7 ft
P = 8 ft
R = 9 ft
S = 10 ft
T = 12 ft
U = 15 ft
V = 18 ft
W = 20 ft
Y = 22 ft
1 = 25 ft
2 = 30 ft

* For all thermostats, the heater must be two inches minimum width and five inches minimum length.

Lead Insulation

0 = None
1 = 1180 Teflon®
2 = 1180 cUR®
3 = 3133 22 GA
4 = 3134 18 GA
6 = 1199 cUR®
7 = HPN
8 = 6 foot HPN Set
9 = Type E Teflon®
A = 1180VDE*
B = 1199VDE*

* 1180VDE denotes a cUR® heater plus a VDE stamp.

Lead Length

A = 8 in
B = 12 in
E = 18 in
F = 24 in
G = 30 in
H = 36 in
J = 40 in
K = 4 ft
L = 5 ft
M = 6 ft
N = 7 ft
P = 8 ft
R = 9 ft
S = 10 ft
T = 12 ft
U = 15 ft
V = 18 ft
W = 20 ft
Y = 22 ft
1 = 25 ft
2 = 30 ft

Availability:
Modified Stock: Shipment within five working days

SPECIFICATION FORM

PROJECT NAME	BY	DATE	REVISION	ICS PROJECT NO
SAND COULEE, MT	SM	08/2014	SUBMITTAL	2848

SPECIFICATION:

DEVICE: CIRCUIT BREAKER 1 POLE

MANUFACTURER: SQUARE D

MODEL: QOU

RANGE / SCALE: 10A, 120VAC

INPUT: N/A

OUTPUT: N/A

QUANTITY:

FEATURES:

CIRCUIT BREAKER 1 POLE QOU110

Low Ampere QOU Miniature Circuit Breakers

General Specifications Common to All Low Ampere QOU Circuit Breakers

- For convenient flush mount, surface mount or DIN mount (symmetrical rail 35 x 7.5 DIN/EN 50 022)
- Single handle with internal common trip
- Terminal lug wire size (1) #14–#2 AWG Cu or Al
- Reversible line and load lugs
- Field-installable quick connectors
- UL Listed 48 Vdc (5,000 AIR)
- UL Listed as HACR Type—10–70 A

High Ampere QOU Circuit Breakers

General Specifications Common to All High Ampere QOU Circuit Breakers

- Flush mount, surface mount, and DIN rail mount
- Internal common trip
- Lugs supplied in standard position only
- Terminal lug wire size (1) #12–#2/0 AWG Cu or Al
- UL Listed 60 Vdc per pole (5000 AIR)—**Note:** except switches
- UL Listed as HACR type—80–125 A

Special Ordering Instructions:

For Bulk-packed QOU Circuit Breakers and Accessories

QOU circuit breakers and accessories must be ordered in multiples of the quantities listed. Bulk-packed circuit breakers do not include mounting feet.

EXAMPLE:

Individual pack—small quantity orders: To receive five QOU220 circuit breakers, order five individual QOU220 circuit breakers at **$58.00** each. Product will be individually packaged, and will include necessary mounting feet.

Bulk pack—large quantity order. To order 440 QOU220 circuit breakers using bulk packaging, order 440 QOU220B at **$56.00** each. Product will be packaged in 22 packages of 20 pieces each. Product will not include mounting feet. To order mounting feet, order 880 pieces of QOUMF2B. Product will be packaged in 22 packages of 40 pieces each.

Interrupting Ratings . . . . . page 6-3
Accessories . . . . . pages 6-12, 6-15
Dimensions . . . . . page 6-49

Low Ampere QOU Series 3 Circuit Breaker (10,000 AIR)

No. of Poles	Voltage Rating	Ampere Rating	Individual Pack		Bulk Pack		
			Catalog No.	Unit Price	Catalog No.	Unit Price	Qrder Qty.
1	120/240 Vac	10	QOU110	$ 26.80	QOU110B	$ 25.20	40
		15	QOU115		QOU115B		
		15	QOU115HM▲		QOU115HMB▲		
		20	QOU120		QOU120B		
		20	QOU120HM▲		QOU120HMB▲		
		25	QOU125		QOU125B		
		30	QOU130		QOU130B		
		35	QOU135		QOU135B		
		40	QOU140		QOU140B		
		45	QOU145		QOU145B		
		50	QOU150		QOU150B		
		60	QOU160		QOU160B		
		70	QOU170	52.00	QOU170B	47.10	
2	120/240 Vac	10	QOU210	58.00	QOU210B	56.00	20
		15	QOU215		QOU215B		
		20	QOU220		QOU220B		
		25	QOU225		QQOU225B		
		30	QOU230		QOU230B		
		35	QOU235		QOU235B		
		40	QOU240		QOU240B		
		45	QOU245		QOU245B		
		50	QOU250		QOU250B		
		60	QOU260		QOU260B		
		70	QOU270	114.00	QOU270B	112.00	
	240 Vac	15	QOU215H■	112.00	QOU215HB	107.00	
		20	QOU220H■		QOU220HB		
		25	QOU225H■		QOU225HB		
		30	QOU230H■		QOU230HB		
3	240 Vac	10	QOU310	190.00	QOU310B	187.00	12
		15	QOU315		QOU315B		
		20	QOU320		QOU320B		
		25	QOU325		QOU325B		
		30	QOU330		QOU330B		
		35	QOU335		QOU335B		
		40	QOU340		QOU340B		
		45	QOU345		QOU345B		
		50	QOU350		QOU350B		
		60	QOU360		QOU360B		

High Ampere QOU Series 3 Circuit Breaker (10,000 AIR)

No. of Poles	Voltage Rating	Ampere Rating	Individual Pack		Bulk Pack		
			Catalog No.	Unit Price	Catalog No.	Unit Price	Qrder Qty.
1	120/240Vac	80	QOU180	$117.00	QOU180B	116.00	40
		90	QOU190		QOU190B		
		100	QOU1100		QOU1100B		
2	120/240 Vac	80	QOU280	164.00	QOU280B	163.00	20
		90	QOU290		QOU290B	163.00	
		100	QOU2100		QOU2100B	163.00	
		125	QOU2125	301.00	QOU2125B	298.00	
3	240 Vac	70	QOU370	242.00	QOU370B	238.00	12
		80	QOU380	277.00	QOU380B	274.00	
		90	QOU390		QOU390B		
		100	QOU3100		QOU3100B		

QYU UL Recognized Component, Supplementary Protectors (5,000 AIR)

No. of Poles	Voltage Rating	Ampere Rating	Individual Pack		Bulk Pack		
			Catalog No.	Unit Price	Catalog No.	Unit Price	Qrder Qty.
1	277 Vac	10	QYU110	81.00	QYU110B	80.00	40
		15	QYU115		QYU115B		
		20	QYU120		QYU120B		
		25	QYU125		QYU125B		
		30	QYU130		QYU130B		

QOU Non-Automatic Switch

No. of Poles	Voltage Rating	Ampere Rating	Individual Pack		Bulk Pack		
			Catalog No.	Unit Price	Catalog No.	Unit Price	Qrder Qty.
2	240 Vac	60	QOU200	$ 58.00	QOU200B	$ 56.00	20
		100	QOU2000	164.00	QOU2000B	163.00	
		125	QOU20001	301.00	QOU20001B	298.00	
3		60	QOU300	190.00	QOU300B	187.00	12
		100	QOU3000	277.00	QOU3000B	274.00	
		125	QOU30001	477.00	QOU30001B	474.00	

▲ HM High magnetic trip circuit breakers are recommended for applications where high initial inrush may occur and for individual dimmer applications.
■ QOU-H interrupting rating is 5 kA at 240 Vac.

© 2003 Schneider Electric
All Rights Reserved
9/8/03

water and wastewater control solutions
Instrument Control Systems ICS HEALY-RUFF
csia CERTIFIED
13005 16TH AVE. NORTH • SUITE 100 • PLYMOUTH MN 55441
PHONE: (763) 559-0568 • FAX: (763) 559-2187
www.icshealyruff.com

ENGINEERING • INSTALLATION • SERVICE

TAB 5

This control panel is design to monitor and control the local water system. The unit will communicate with the tank hard wired to new well house control panel and provide local display of tank level, and provide pump up control for the well pumps. The panel will include motor starters and operators for the 3 existing (wells 3, 4, and 5) and future well 6. Well pumps will be operated to maintain water tank levels.

Control unit will monitor local pressure at new water meter vault via a pressure switch. This pressure transmitter will be used to provide well pump control based on system pressure in the event the reservoir level transmitter is removed from service.

The operator display will be the local operator interface to the water system. All system parameters monitored or controlled will be viewable and adjustable via the operator interface. Each screen will be an active/dynamic graphical representation of the system or associated specific parameters.

System setpoints will be provided. Each setpoint will have a user adjustable (0-999 seconds) time delay to prevent momentary process fluctuations from impacting alarm or control.

A menu system will be provided for the user with proper access to change setpoints, setup pump starts, stops, alarms, alarm delays and setup pump alternation.
The following displays will be provided:

Status

- Reservoir Level
- System Pressure
- Well Flow Rate as a Total, Daily and Hourly
- Well 5 Drawdown Level
- Well 6 Drawdown Level
- Well 3 Status – Off, Call, Run, Fail, Run Time, # of Starts
- Well 4 Status – Off, Call, Run, Fail, Run Time, # of Starts
- Well 5 Status – Off, Call, Run, Fail, Run Time, # of Starts
- Well 6 Status – Off, Call, Run, Fail, Run Time, # of Starts

Trend - A trend screen showing at a minimum the last 2 hours of level/pressure/flow fluctuations. The following points will be trended.

- Reservoir Level
- System Pressure
- Well flow as Total, Daily or Hourly
- Well 5 Drawdown Level
- Well 6 Drawdown Level

Setpoints

- Reservoir
    1. High Level
    2. Low Level

3. Lead Pump On/Off
4. Lag1 Pump On/Off
5. Lag2 Pump On/Off
6. Lag3 Pump On/Off

- System Pressure
  1. High Level
  2. Low Level
  3. Lead Pump On/Off (System Pressure Mode Only)
  4. Lag1 Pump On/Off (System Pressure Mode Only)
  5. Lag2 Pump On/Off (System Pressure Mode Only)
  6. Lag3 Pump On/Off (System Pressure Mode Only)
- Well 5 Level Drawdown
  1. Low Level Cutout/Restore (Cuts Out Well 5 Pump)
- Well 6 Level Drawdown
  1. Low Level Cutout/Restore (Cuts Out Well 6 Pump)
- System Pressure
  1. High Level

Alarms – each alarm will be logged with a time and date stamp and displayed in the alarms summary screen until the operator acknowledges it. A historical screen will provide a historical log for the most recent 64 events. As a minimum, the following alarms will be monitored:

- High Reservoir Level with Dry Contacts (for Future Use)
- Low Reservoir Level with Dry Contacts (for Future Use)
- High System Pressure (System Pressure Mode Only)
- Low System Pressure (System Pressure Mode Only)
- Well 5 Low Level Cutout
- Well 6 Low Level Cutout
- Pump 3 Failure (Common)
- Pump 4 Failure (Common)
- Pump 5 Failure (Common)
- Pump 6 Failure (Common)
- Power/Phase Failure
- Control Power Failure

Functions

- Well Pump – Pump Up Control
- Alternator – Well Pump
- Operator Selection of Reservoir Level or System Pressure Control.
- Well Pump Failure Determination

The controller will be programmed to provide the following basic functions:

- Provide pump up mode control of remote wells based on tank water levels.
- The controller will be capable of operating pumps in an automatic or fixed mode. In automatic mode, a built in alternator will be available to equalize motor starts,

stops and run time. The alternator will have the capability of being put into fixed sequence mode at any time. Alternation will also have the capability to alternate cyclically or following an adjustable period of time.

- Alternator will be programmed to allow for up to 4 stage alternation.
- An alternation/well pump matrix screen will allow for operator selection of wells to be activated based on specific stages (Fixed Mode) or to set the wells in a rotating (Alternation) mode of operation.

water and wastewater control solutions
Instrument Control Systems ICS HEALY-RUFF
csia CERTIFIED
13005 16TH AVE. NORTH • SUITE 100 • PLYMOUTH MN 55441
PHONE: (763) 559-0568 • FAX: (763) 559-2187
www.icshealyruff.com

ENGINEERING • INSTALLATION • SERVICE

TAB 6

DRAWING INDEX

FILENAME	TITLE_1	TITLE_2	TITLE_3	FILEDATE
2848A-NDX	WELL HOUSE CP	DRAWING INDEX		8/4/2014
2848A-SYM	WELL HOUSE CP	SYMBOL SHEET		8/4/2014
2848A-001	WELL HOUSE CP	ENCLOSURE DETAIL		8/4/2014
2848A-002	WELL HOUSE CP	PLC I/O SCHEDULE		8/4/2014
2848A-100A	WELL HOUSE CP	CONTROL POWER WIRING		8/4/2014
2848A-100B	WELL HOUSE CP	CONTROL POWER WIRING		8/4/2014
2848A-101	WELL HOUSE CP	PUMP 3	CONTROL WIRING	8/4/2014
2848A-102	WELL HOUSE CP	PUMP 4	CONTROL WIRING	8/4/2014
2848A-103	WELL HOUSE CP	PUMP 5	CONTROL WIRING	8/4/2014
2848A-104	WELL HOUSE CP	PUMP 6	CONTROL WIRING	8/4/2014
2848A-105	WELL HOUSE CP	RESERVOIR LEVEL	CONTROL WIRING	8/4/2014
2848A-106	WELL HOUSE CP	SYSTEM PRESSURE	CONTROL WIRING	8/4/2014
2848A-107	WELL HOUSE CP	WELL FLOW	CONTROL WIRING	8/4/2014
2848A-108	WELL HOUSE CP	DIGITAL INPUT	CONTROL WIRING	8/4/2014
2848A-109	WELL HOUSE CP	DIGITAL OUTPUT	CONTROL WIRING	8/4/2014
2848A-110	WELL HOUSE CP	ANALOG INPUT	CONTROL WIRING	8/4/2014
2848A-111	WELL HOUSE CP	ANALOG OUTPUT	CONTROL WIRING	8/4/2014

DATE LAST PLOTTED: 8/12/2014 1:04 PM PATH AND FILENAME: P:\2800-2899\2848 - SAND COULEE, MT - WATER\ACAD\2848A-NDX.DWG

APPROVAL DRAWINGS
DO NOT USE FOR CONSTRUCTION
8/4/14

HEALY-RUFF

DATE	REVISION DESCRIPTION
8/4/14	APPROVAL DRAWINGS

water and wastewater control solutions
ICS HEALY-RUFF
Instrument Control Systems, Inc.
13005 16th Avenue North, Suite 100, Plymouth, MN 55441
Ph: (763) 559-0568 Fax: (763) 559-2187 www.icshealyruff.com

(C) 2010, CONFIDENTIAL, PROPRIETARY INFORMATION NOT TO BE DISCLOSED, ALL RIGHTS RESERVED BY INSTRUMENT CONTROL SYSTEMS, INC.

DATE	8/4/14
DWN	JSS
CKD.	GK
ENGR.	JSS
ASSEM.	
SHEET	1 OF 17

PROJECT
SAND COULEE, MT
WELL HOUSE CP
DRAWING INDEX

PROJ. NO. 2848A
DWG. NO. NDX

CONDUCTORS

- CONDUCTOR
- CONDUCTORS NOT CONNECTED
- CONDUCTORS CONNECTED
- CONDUCTOR SHIELD
- FIELD CONDUCTOR
- EARTH GROUND
- CHASSIS GROUND
- SHIELD GROUND (ISOLATED IF REQUIRED BY SPEC.)

TERMINALS

- #### — TERMINAL BLOCK FOR FIELD TERMINATION
- #### □ — TERMINAL BLOCK FOR INTERNAL USE ONLY TERMINATION
- #### ○ — DEVICE TERMINATION POINT

RELAY COILS

- CR1 / XX — DEVICE ID, CONTROL RELAY; NO; NC; TYPE CODE (INTERNAL USE ONLY)
- M1 — MOTOR STARTER; NO; NC
- TD1 / XX — ELECTRIC TIMER WITH ADJUSTABLE TIMING RANGE; SET @ XXSEC.; NO; NC
- SOL1 — SOLENOID
- OL1 — THERMAL OVERLOAD

SWITCHES

- DESC1 / DESC2 / PB1 — DESCRIPTION TEXT (EXAMPLE: LAMP TEST); NORMALLY OPEN PUSHBUTTON
- DESC1 / DESC2 / PB2 — NORMALLY CLOSED PUSHBUTTON
- DESC1 / DESC2 / PB3 — NORMALLY CLOSED MUSHROOM HEAD E-STOP
- MECHANICAL CONNECTION
- DESC1 / DESC2 / SS1 — POS1, POS2, 0X — TWO POSITION SELECTOR SWITCH SHOWN IN 'POS1'; CONTACT MADE IN 'POS2'
- DESC1 / DESC2 / SS2 — POS1, POS2, POS3, X00, 00X — THREE POSITION SELECTOR SWITCH SHOWN IN 'POS1' POSITION; ARROW INDICATES SPRING RETURN FROM 'POS3'; CONTACT MADE IN 'POS3'
- DESC1 / DESC2 / SS3 — POS1, POS2, POS3, POS4, X000, 00X0 — FOUR POSITION SELECTOR SWITCH SHOWN IN 'POS1' POSITION; CONTACT MADE IN 'POS3'

LIMIT SWITCHES

- DESC1 / DESC2 / ZS1 — NORMALLY OPEN
- DESC1 / DESC2 / ZS2 — NORMALLY CLOSED
- DESC1 / DESC2 / ZS3 — NORMALLY OPEN HELD CLOSED
- DESC1 / DESC2 / ZS4 — NORMALLY CLOSED HELD OPEN

PROCESS SWITCHES

- DESC1 / DESC2 / WS1 — TORQUE SWITCH NORMALLY OPEN CLOSE ON INCREASE TORQUE
- DESC1 / DESC2 / WS2 — TORQUE SWITCH NORMALLY CLOSED OPEN ON INCREASE TORQUE
- DESC1 / DESC2 / LS1 — LIQUID LEVEL SWITCH NORMALLY OPEN CLOSE ON RISE
- DESC1 / DESC2 / LS2 — LIQUID LEVEL SWITCH NORMALLY CLOSED OPEN ON RISE
- DESC1 / DESC2 / FS1 — FLOW SWITCH NORMALLY OPEN CLOSE ON INCREASE FLOW
- DESC1 / DESC2 / FS2 — FLOW SWITCH NORMALLY CLOSED OPEN ON INCREASE FLOW
- DESC1 / DESC2 / PS1 — PRESSURE SWITCH NORMALLY OPEN CLOSE ON RISE
- DESC1 / DESC2 / PS2 — PRESSURE SWITCH NORMALLY CLOSED OPEN ON RISE
- DESC1 / DESC2 / TS1 — TEMPERATURE SWITCH NORMALLY OPEN CLOSE ON RISE
- DESC1 / DESC2 / TS2 — TEMPERATURE SWITCH NORMALLY CLOSED OPEN ON RISE

PILOT LIGHTS

- PL1 / A — PILOT LIGHT COLOR: AMBER

COLOR CODES
A-AMBER
W-WHITE
R-RED
B-BLUE
G-GREEN

- PL2 / R — PUSH TO TEST PILOT LIGHT

INPUT/OUTPUT DEVICES

- # / 1/1/1 — DIGITAL INPUT ADDRESS: RACK/SLOT/POINT
- A# / B# / 1/1/1 — DIGITAL OUTPUT ADDRESS: RACK/SLOT/POINT
- A# / 1/1/1 — DIGITAL OUTPUT ADDRESS: RACK/SLOT/POINT
- # / AI / 1/1/1 — ANALOG INPUT ADDRESS: RACK/SLOT/POINT
- # / AO / 1/1/1 — ANALOG OUTPUT ADDRESS: RACK/SLOT/POINT

COIL CONTACTS

- CR1 — NORMALLY OPEN CONTACT
- CR2 — NORMALLY CLOSED CONTACT
- TD1 — NORMALLY OPEN CONTACT ON DELAY
- TD2 — NORMALLY CLOSED CONTACT ON DELAY
- TD3 — NORMALLY OPEN CONTACT OFF DELAY
- TD4 — NORMALLY CLOSED CONTACT OFF DELAY

WIRE COLOR STANDARDS

BLK	BLACK, INCOMING POWER AC
WHT	WHITE, NEUTRAL AC
GRN	GREEN, GROUND
RED	RED, CONTROL POWER AC
BLU	BLUE, CONTROL POWER DC
BLU/S	BLUE WITH STRIP, CONTROL POWER COMMON DC
SHLD	SHIELDED 2 CONDUCTOR BLACK(+) WHITE(-), LOW SIGNAL CIRCUITS
YEL	YELLOW, SEPARATE EXTERNAL CONTROL POWER SOURCE

MISCELLANEOUS

- CB1 / ##AMP — CIRCUIT BREAKER WITH AMPERAGE
- FU1 / ##AMP — FUSE WITH AMPERAGE
- AH1 — AUDIBLE DEVICE
- ETM1 — ELAPSED TIME METER
- R1 / 250 OHMS — RESISTOR 250 OHM
- D1 — RECTIFIER, DIODE
- C1 — CAPACITOR, ELECT.
- XF1 — H1, H3, H2, H4, X1, X2 / ##VAC — TRANSFORMER SECONDARY VOLTAGE AND RATING INDICATED AS APPLICABLE

INSTRUMENTATION DEVICES

- FQ / # — SUBPANEL MOUNTED DEVICE WITH LOOP OR SEQUENCE NUMBER
- LI / # — PANEL MOUNTED DEVICE WITH LOOP OR SEQUENCE NUMBER
- FT / # — FIELD MOUNTED DEVICE WITH LOOP OR SEQUENCE NUMBER

ISA CODES

FI - FLOW RATE INDICATOR
LI - LEVEL INDICATOR
FT - FLOW TRANSMITTER
FY - FLOW INTEGRATOR
FQ - FLOW QUANTITY

RESERVED WIRE NUMBERS

1	120VAC PANEL HOT	7	LOW VOLTAGE AC HOT
N	120VAC PANEL NEUTRAL	8	LOW VOLTAGE AC NEUTRAL
3	24V DC POSITIVE	10	GROUND FAULT CIRCUIT HOT
4	24V DC COMMON	N2	GROUND FAULT CIRCUIT NEUTRAL
5	12V DC POSITIVE		
6	12V DC COMMON		

DEVICE ID / DRAWING CROSS REFERENCE

XX##### — SEQUENCE 00-99; DRAWING CROSS REFERENCE 1-99; FAMILY CODE ABREVIATION

EXAMPLE: CR2101

#####X-### — DRAWING NUMBER 000-999; SEPARATOR; PANEL DESIGNATION A-X; PROJECT NUMBER

DATE LAST PLOTTED: 8/12/2014 1:04 PM PATH AND FILENAME: P:\2800-2899\2848 - SAND COULEE, MT - WATER\ACAD\2848A-SYM.DWG

APPROVAL DRAWINGS
DO NOT USE FOR CONSTRUCTION
8/4/14

HEALY-RUFF

DATE	REVISION DESCRIPTION
8/4/14	APPROVAL DRAWINGS

water and wastewater control solutions
ICS HEALY-RUFF
Instrument Control Systems, Inc.
13005 16th Avenue North, Suite 100, Plymouth, MN 55441
Ph: (763) 559-0568 Fax: (763) 559-2187 www.icshealyruff.com

(C) 2010, CONFIDENTIAL, PROPRIETARY INFORMATION NOT TO BE DISCLOSED, ALL RIGHTS RESERVED BY INSTRUMENT CONTROL SYSTEMS, INC.

DATE	8/4/14
DWN	JSS
CKD.	GK
ENGR.	JSS
ASSEM.	
SHEET	2 OF 17

PROJECT
SAND COULEE, MT
WELL HOUSE CP
SYMBOL SHEET

PROJ. NO. 2848A
DWG. NO. SYM

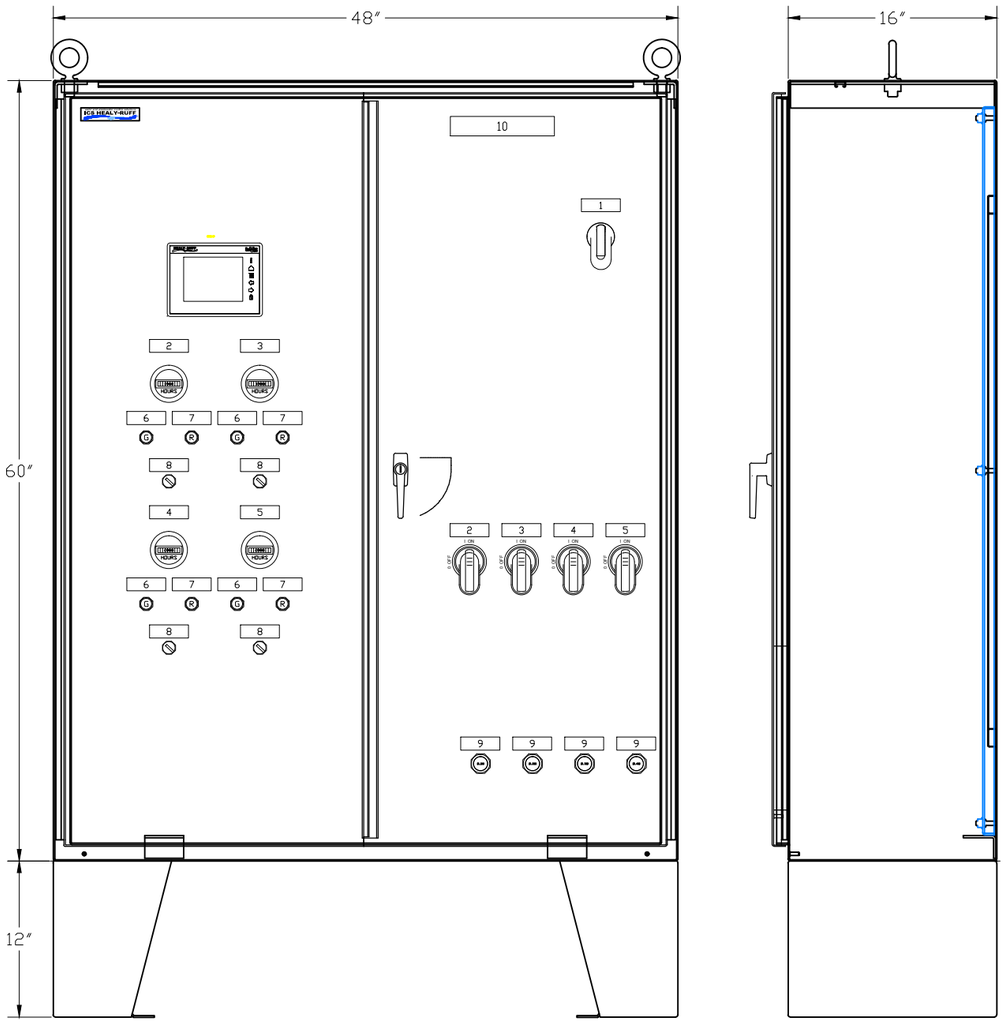

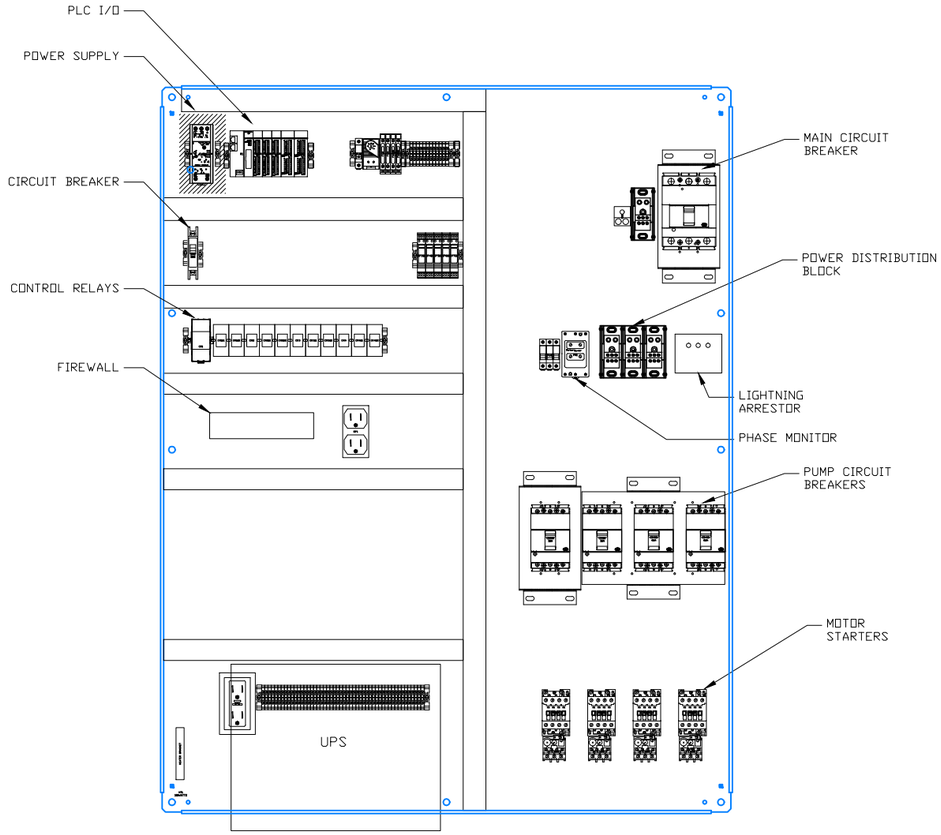

PANEL LAYOUT

DANGER
ARC FLASH & SHOCK HAZARD
APPROPRIATE PERSONAL PROTECTION EQUIPMENT REQUIRED

MOUNTED ON DOOR

NOTES:

1. ENCLOSURE IS A NEMA TYPE 12 HOFFMAN A624816LP, WITH INNER PANEL, AND 12″ FLOOR STANDS.
2. FINISH IS ANSI 61 GRAY.
3. UL 508A

SCALE

0 6″ 12″ 24″

THIS CONTROL PANEL WILL BEAR THE UL LABEL AS A LISTED INDUSTRIAL CONTROL PANEL WITH THE FOLLOWING RATINGS:
240 VAC
3 PHASE, 60 HZ
100 FLA
10 HP LARGEST MOTOR
5 KA RMS SYM SCCR

NAMEPLATE SCHEDULE

TAGNAME	DESC1	DESC2	DESC3	DESC 4	SIZE	REMARKS
1	MAIN POWER				1X3	
2	WELL 3				1X3	QTY 2
3	WELL 4				1X3	QTY 2
4	WELL 5				1X3	QTY 2
5	WELL 6				1X3	QTY 2
6	RUNNING				1X3	QTY 4
7	HAND OFF AUTO				1X3	QTY 4
8	OVERLOAD				1X3	QTY 4
9	OVERLOAD RESET				1X3	QTY 4
10	ZIMMERMAN PUMP STATION				1.5X8	

NAMEPLATES ARE BLACK WITH WHITE LETTERS

DATE LAST PLOTTED: 8/12/2014 1:05 PM PATH AND FILENAME: P:\2800-2899\2848 - SAND COULEE, MT - WATER\ACAD\2848A-001.DWG

APPROVAL DRAWINGS
DO NOT USE FOR CONSTRUCTION
8/4/14

HEALY-RUFF

DATE	REVISION DESCRIPTION
8/4/14	APPROVAL DRAWINGS

water and wastewater control solutions
ICS HEALY-RUFF
Instrument Control Systems, Inc.
13005 16th Avenue North, Suite 100, Plymouth, MN 55441
Ph: (763) 559-0568 Fax: (763) 559-2187 www.icshealyruff.com

(C) 2010, CONFIDENTIAL, PROPRIETARY INFORMATION NOT TO BE DISCLOSED, ALL RIGHTS RESERVED BY INSTRUMENT CONTROL SYSTEMS, INC.

DATE	8/4/14
DWN	JSS
CKD.	GK
ENGR.	JSS
ASSEM.	
SHEET	3 OF 17

PROJECT
SAND COULEE, MT
WELL HOUSE CP
ENCLOSURE DETAIL

PROJ. NO. 2848A
DWG. NO. 001

MICRO V-PAC IICE I/O SCHEDULE

QTY	TAGS	DESCRIPTION	MFG	CATALOG
1	CP1	ETHERNET ROUTER/FIREWALL ASA 550 SERIES N/A	CISCO	ASA5505-BUN-K9
1	PC200	MICRO-VPAC IICE 10-30V DC	HEALY-RUFF	106541
2	R1/S3 R1/S4	ANALOG INPUT MODULE SMARTRAIL CURRENT 4-20MA	HORNER	HE599ADC170
1	R1/S5	ANALOG OUTPUT MODULE SMARTRAIL CURRENT 4-20MA	HORNER	HE599DAC106
1	R1/S1	DIGITAL INPUT I/O MODULE SMARTRAIL 24VDC POS/NEG LOGIC	HORNER	HE599DIM610
1	R1/S2	DIGITAL RELAY OUTPUT I/O MODULE SMARTRAIL 250VAC, 30VDC, 2.0 AMP	HORNER	HE599DQM602
1	CBL3	ETHERNET CABLE CAT 5 ETHERNET CABLE	GENERIC	CAT5
1	CBL1		CABLE WHOLESALE	10X6-02110
1	CBL2	CAT6, UTP, WITH MOLDED BOOT CAT-6 ETHERNET CABLE CAT 6	CABLE WHOLESALE	10X8-02203

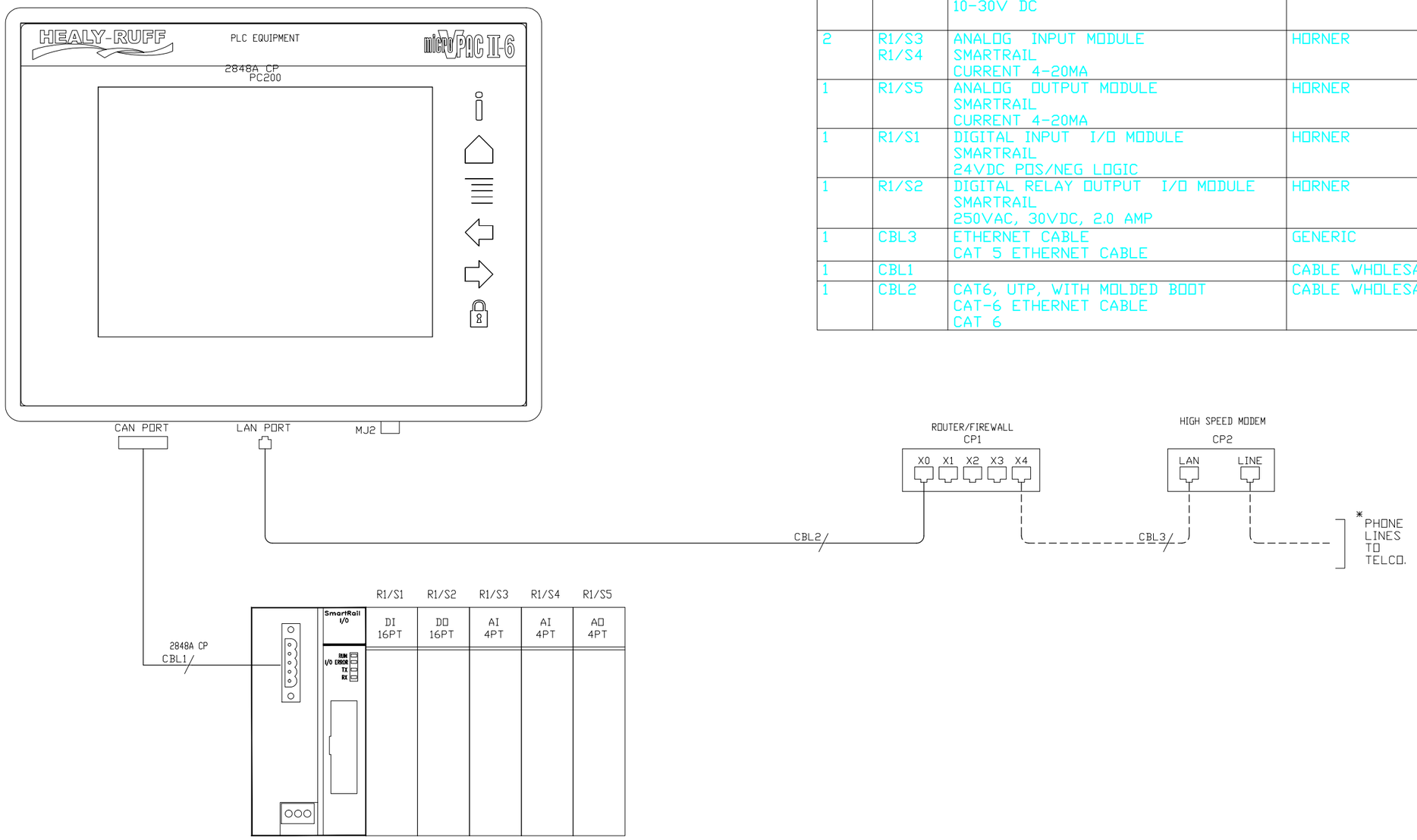

DATE LAST PLOTTED: 8/12/2014 1:05 PM PATH AND FILENAME: P:\2800-2899\2848 - SAND COULEE, MT - WATER\ACAD\2848A-002.DWG

APPROVAL DRAWINGS
DO NOT USE FOR CONSTRUCTION
8/4/14

HEALY-RUFF

DATE	REVISION DESCRIPTION
8/4/14	APPROVAL DRAWINGS

water and wastewater control solutions
ICS HEALY-RUFF
Instrument Control Systems, Inc.
13005 16th Avenue North, Suite 100, Plymouth, MN 55441
Ph: (763) 559-0568 Fax: (763) 559-2187 www.icshealyruff.com

(C) 2010, CONFIDENTIAL, PROPRIETARY INFORMATION NOT TO BE DISCLOSED, ALL RIGHTS RESERVED BY INSTRUMENT CONTROL SYSTEMS, INC.

DATE	8/4/14
DWN	JSS
CKD.	GK
ENGR.	JSS
ASSEM.	
SHEET	4 OF 17

PROJECT
SAND COULEE, MT

WELL HOUSE CP
PLC I/O SCHEDULE

PROJ. NO. 2848A
DWG. NO. 002

FIELD OR AS NOTED

CONTROL PANEL

MAIN DISCONNECT AND BRANCH CIRCUIT PROTECTION TO BE PROVIDED BY OTHERS

UTILITY POWER
240V, 3ø, 4W, 60HZ

A
B
C
N1

GROUND PER NEC

CB1
125A

DB1 DB2 DB3 DB4 DB5

LIGHTNING ARRESTOR
SP1

DWG. 100
L1
L2
L3

DWG. 101
L1
L2

DWG. 102
L1
L2
L3

DWG. 103
L1
L2
L3

DWG. 104
L1
L2
L3

FU1

TS1 50 HT1 100WATTS L N
ANTI-CONDENSATION HEATER

RP1
DUPLEX RECEPTACLE

UP11
PROVISIONS FOR UNINTERRUPTIBLE POWER SUPPLY
2000VA

CR1
53
CR1 51 51 52 52 CR1
CR1 B1

CB2-10A

UPS BYPASS RELAY
NO 100B-22,100B-22
NC 100B-18,100B-18

L1 L2 L3 1 N

* PROVIDED BY OTHERS

DATE LAST PLOTTED: 8/12/2014 1:05 PM PATH AND FILENAME: P:\2800-2899\2848 - SAND COULEE, MT - WATER\ACAD\2848A-100A.DWG

APPROVAL DRAWINGS
DO NOT USE FOR CONSTRUCTION
8/4/14

HEALY-RUFF

DATE	REVISION DESCRIPTION
8/4/14	APPROVAL DRAWINGS

water and wastewater control solutions
ICS HEALY-RUFF
Instrument Control Systems, Inc.
13005 16th Avenue North, Suite 100, Plymouth, MN 55441
Ph: (763) 559-0568 Fax: (763) 559-2187 www.icshealyruff.com

(C) 2010, CONFIDENTIAL, PROPRIETARY INFORMATION NOT TO BE DISCLOSED, ALL RIGHTS RESERVED BY INSTRUMENT CONTROL SYSTEMS, INC.

DATE	8/4/14
DWN	JSS
CKD.	GK
ENGR.	JSS
ASSEM.	
SHEET	5 OF 17

PROJECT
SAND COULEE, MT

WELL HOUSE CP
CONTROL POWER WIRING

PROJ. NO. 2848A
DWG. NO. 100A

FIELD OR AS NOTED

CONTROL PANEL

240V, 3PH, 60HZ FROM DIST BLOCK

L1 L2 L3

PM1

FU3 1 OL1 — 1 — 5

FU4 1 OL2 — 2 — 4

FU5 1 OL3 — 3 — 6

MOTOR SAVER
MODEL 460

1 — 120VAC — N

CR2 A14 — PHASE FAILURE NO 100B-43 NC

CR3 A14 — PHASE FAILURE NO 101-17,102-17,103-17,104-17 NC

CR4 A14 — CONTROL POWER FAILURE NO 100B-40 NC

DUPLEX RECEPTACLE
RP2

AC ADAPTER

ROUTER/FIREWALL
CP1

PWR1
POWER SUPPLY
24.0VDC
3.75A

FU2 4 — 54

DIU1
3 — 4
+ LAN 6' MICRO V-PAC MJ2 -
G

R1
SMARTRAIL I/O ETHERNET BASE
+ -
GND

R1/S3
V+ POWER AI V-

R1/S4
V+ POWER AI V-

R1/S5
V+ POWER AO V-

CR4 — CONTROL POWER FAILURE — 56 — B6 — 1/1/14 — CONTROL POWER FAILURE

CR2 — PHASE FAILURE — 55 — B5 — 1/1/13 — PHASE FAILURE

1 3 — 4 N

* PROVIDED BY OTHERS

DATE LAST PLOTTED: 8/12/2014 1:05 PM PATH AND FILENAME: P:\2800-2899\2848 - SAND COULEE, MT - WATER\ACAD\2848A-100B.DWG

APPROVAL DRAWINGS
DO NOT USE FOR CONSTRUCTION
8/4/14

HEALY-RUFF

DATE	REVISION DESCRIPTION
8/4/14	APPROVAL DRAWINGS

water and wastewater control solutions
ICS HEALY-RUFF
Instrument Control Systems, Inc.
13005 16th Avenue North, Suite 100, Plymouth, MN 55441
Ph: (763) 559-0568 Fax: (763) 559-2187 www.icshealyruff.com

(C) 2010, CONFIDENTIAL, PROPRIETARY INFORMATION NOT TO BE DISCLOSED, ALL RIGHTS RESERVED BY INSTRUMENT CONTROL SYSTEMS, INC.

DATE	8/4/14
DWN	JSS
CKD.	GK
ENGR.	JSS
ASSEM.	
SHEET	6 OF 17

PROJECT
SAND COULEE, MT
WELL HOUSE CP
CONTROL POWER WIRING

PROJ. NO. 2848A
DWG. NO. 100B

FIELD OR AS NOTED

CONTROL PANEL

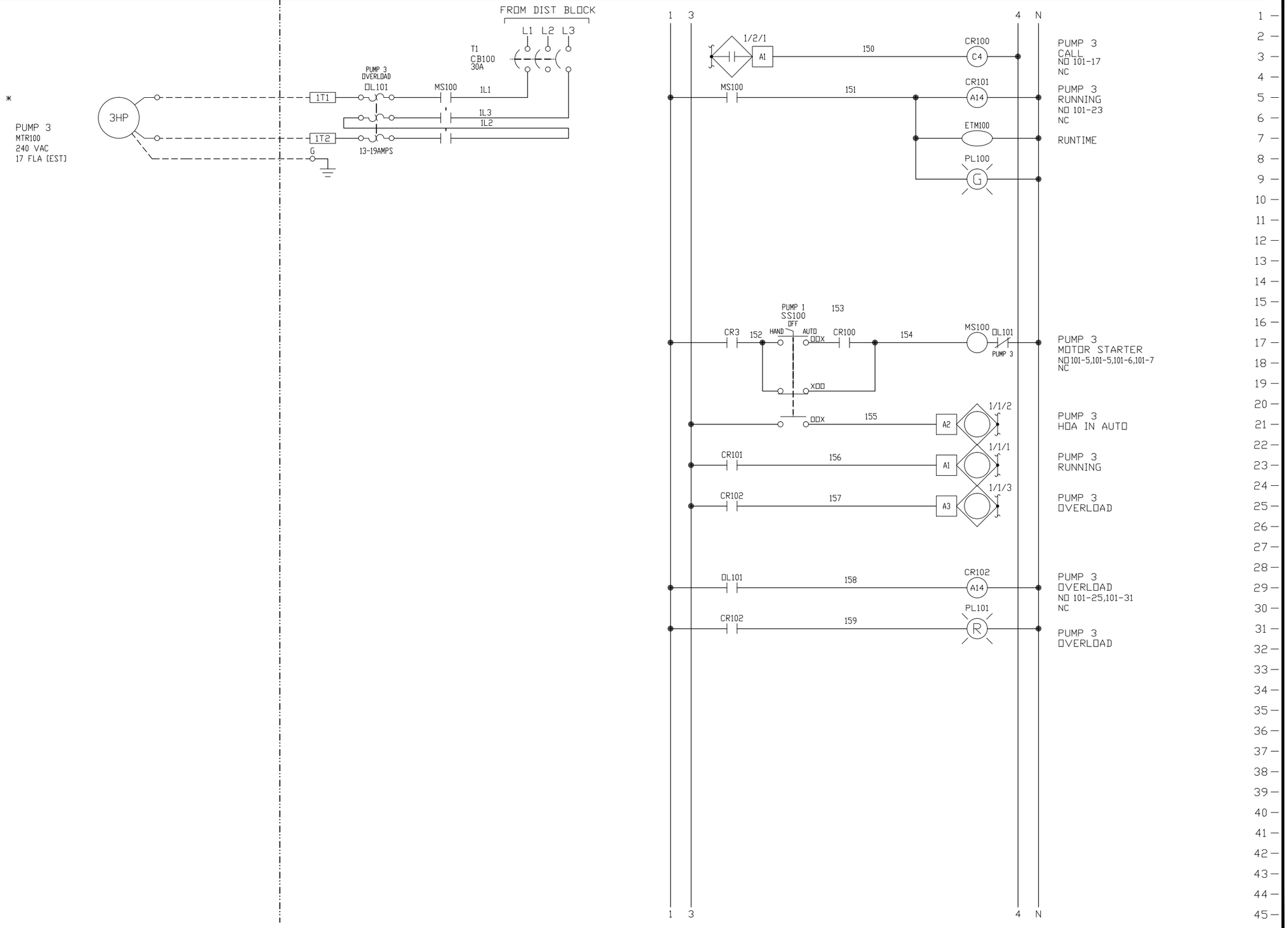

* PROVIDED BY OTHERS

DATE LAST PLOTTED: 8/12/2014 1:05 PM PATH AND FILENAME: P:\2800-2899\2848 - SAND COULEE, MT - WATER\ACAD\2848A-101.DWG

APPROVAL DRAWINGS
DO NOT USE FOR CONSTRUCTION
8/4/14

HEALY-RUFF

DATE	REVISION DESCRIPTION
8/4/14	APPROVAL DRAWINGS

water and wastewater control solutions
ICS HEALY-RUFF
Instrument Control Systems, Inc.
13005 16th Avenue North, Suite 100, Plymouth, MN 55441
Ph: (763) 559-0568 Fax: (763) 559-2187 www.icshealyruff.com

(C) 2010, CONFIDENTIAL, PROPRIETARY INFORMATION NOT TO BE DISCLOSED, ALL RIGHTS RESERVED BY INSTRUMENT CONTROL SYSTEMS, INC.

DATE	8/4/14
DWN	JSS
CKD.	GK
ENGR.	JSS
ASSEM.	
SHEET	7 OF 17

PROJECT
SAND COULEE, MT

WELL HOUSE CP
PUMP 3
CONTROL WIRING

PROJ. NO. 2848A

DWG. NO. 101

FIELD OR AS NOTED

CONTROL PANEL

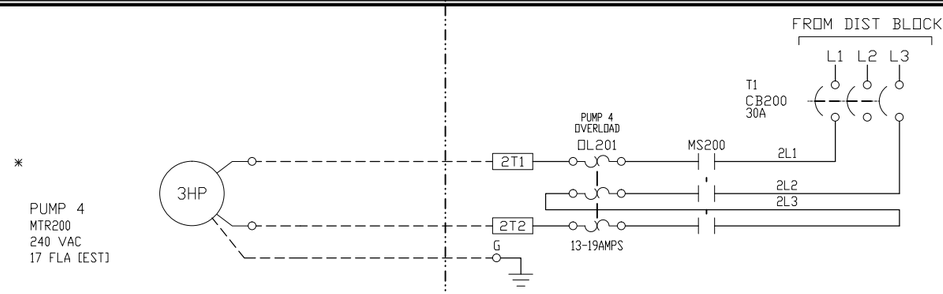

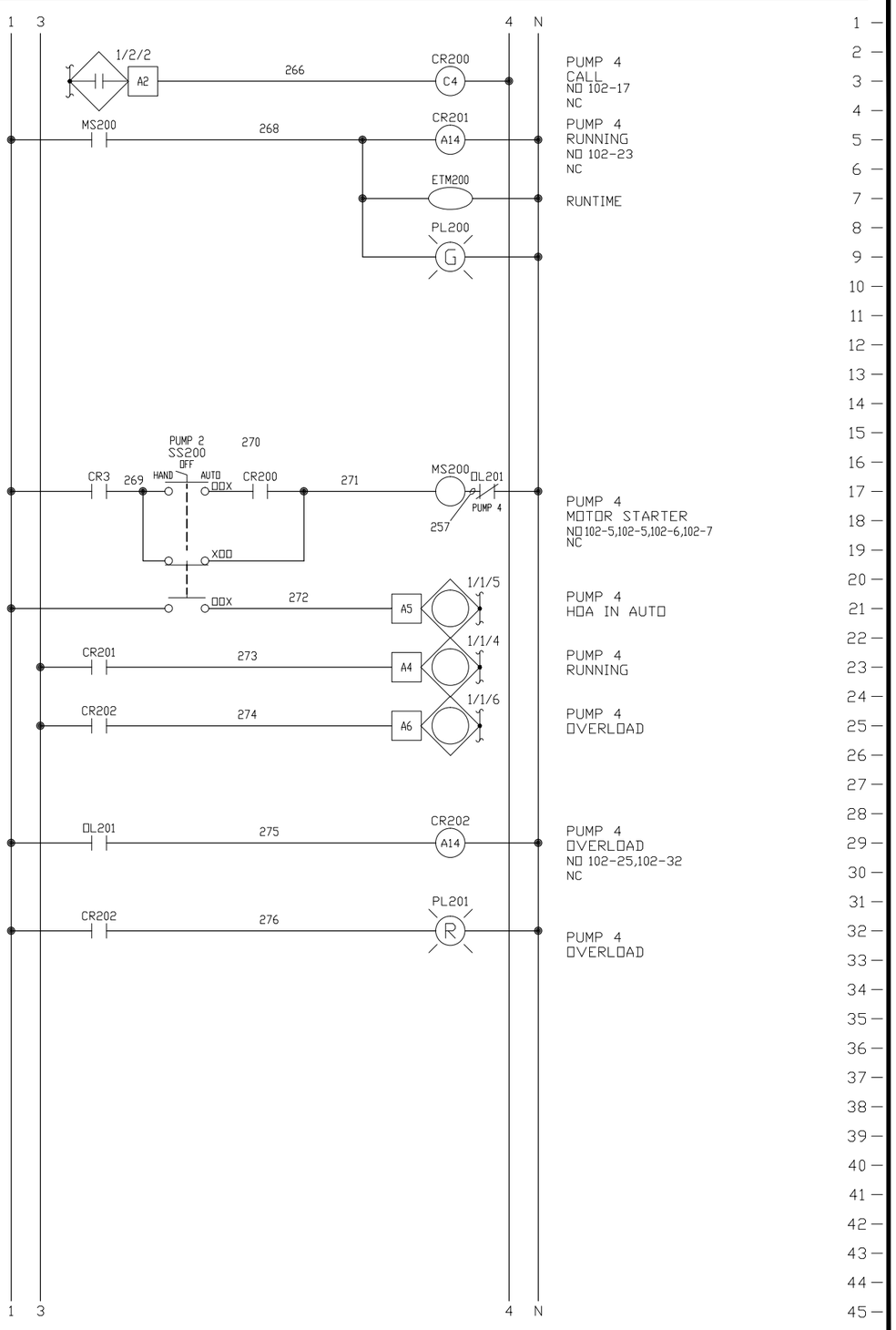

* PROVIDED BY OTHERS

DATE LAST PLOTTED: 8/12/2014 1:05 PM PATH AND FILENAME: P:\2800-2899\2848 - SAND COULEE, MT - WATER\ACAD\2848A-102.DWG

APPROVAL DRAWINGS
DO NOT USE FOR CONSTRUCTION
8/4/14

HEALY-RUFF

DATE	REVISION DESCRIPTION
8/4/14	APPROVAL DRAWINGS

water and wastewater control solutions
ICS HEALY-RUFF
Instrument Control Systems, Inc.
13005 16th Avenue North, Suite 100, Plymouth, MN 55441
Ph: (763) 559-0568 Fax: (763) 559-2187 www.icshealyruff.com

(C) 2010, CONFIDENTIAL, PROPRIETARY INFORMATION NOT TO BE DISCLOSED, ALL RIGHTS RESERVED BY INSTRUMENT CONTROL SYSTEMS, INC.

DATE	8/4/14
DWN	JSS
CKD.	GK
ENGR.	JSS
ASSEM.	
SHEET	8 OF 17

PROJECT
SAND COULEE, MT

WELL HOUSE CP
PUMP 4
CONTROL WIRING

PROJ. NO. 2848A

DWG. NO. 102

FIELD OR AS NOTED

CONTROL PANEL

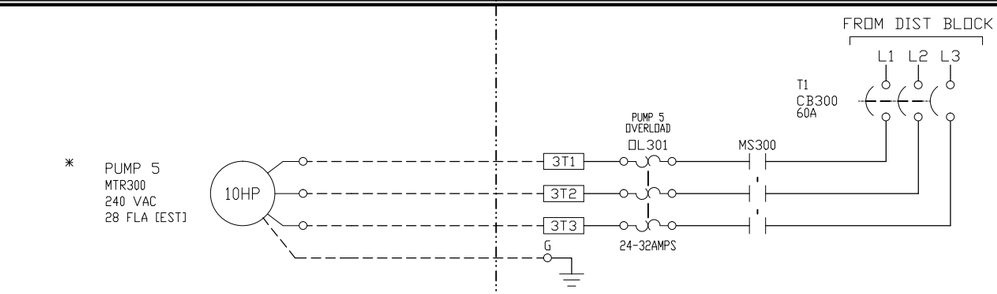

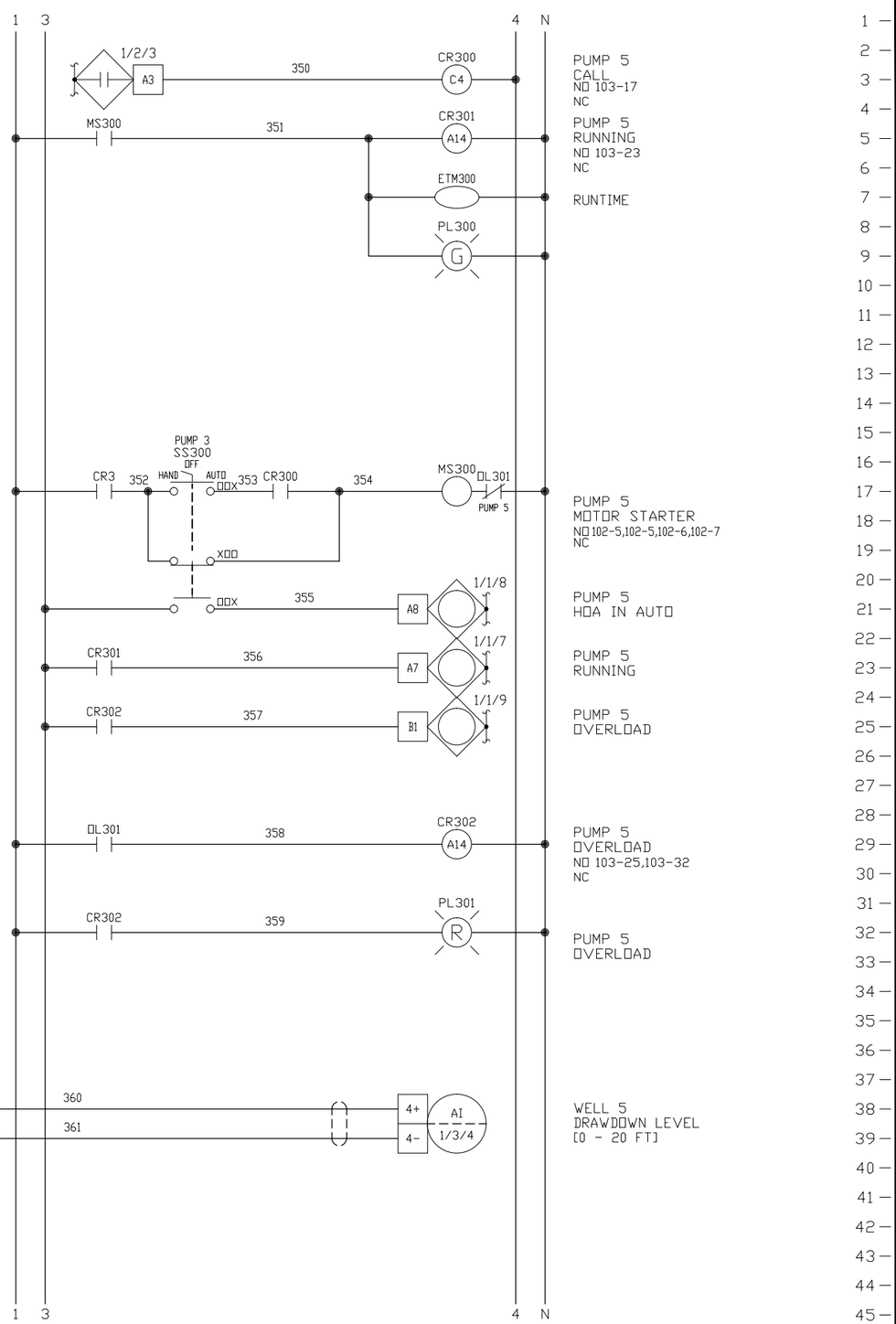

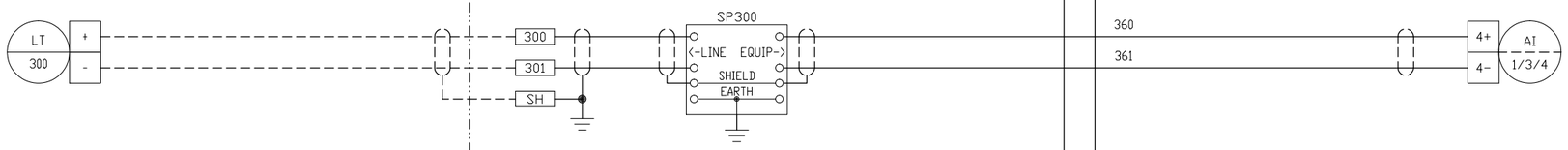

* PROVIDED BY OTHERS

DATE LAST PLOTTED: 8/12/2014 1:05 PM PATH AND FILENAME: P:\2800-2899\2848 - SAND COULEE, MT - WATER\ACAD\2848A-103.DWG

APPROVAL DRAWINGS
DO NOT USE FOR CONSTRUCTION
8/4/14

HEALY-RUFF

DATE	REVISION DESCRIPTION
8/4/14	APPROVAL DRAWINGS

water and wastewater control solutions
ICS HEALY-RUFF
Instrument Control Systems, Inc.
13005 16th Avenue North, Suite 100, Plymouth, MN 55441
Ph: (763) 559-0568 Fax: (763) 559-2187 www.icshealyruff.com

(C) 2010, CONFIDENTIAL, PROPRIETARY INFORMATION NOT TO BE DISCLOSED, ALL RIGHTS RESERVED BY INSTRUMENT CONTROL SYSTEMS, INC.

DATE	8/4/14
DWN	JSS
CKD.	GK
ENGR.	JSS
ASSEM.	
SHEET	9 OF 17

PROJECT
SAND COULEE, MT

WELL HOUSE CP
PUMP 5
CONTROL WIRING

PROJ. NO. 2848A

DWG. NO. 103

FIELD OR AS NOTED

CONTROL PANEL

FROM DIST BLOCK

L1 L2 L3

T1
CB400
60A

PUMP 6
OVERLOAD
OL401

MS400

* PUMP 6
MTR400
240 VAC
28 FLA [EST]

10HP

4T1
4T2
4T3
G

24-32AMPS

1 3 4 N

1/2/4
A4
450
CR400
C4

PUMP 6
CALL
NO 104-17
NC

MS400
451
CR401
A14

PUMP 6
RUNNING
NO 104-23
NC

ETM400

RUNTIME

PL400
G

PUMP 4
SS400
OFF
HAND
AUTO
OOX

CR3
452
453
CR400
454
MS400
OL401
PUMP 6

PUMP 6
MOTOR STARTER
NO 102-5,102-5,102-6,102-7
NC

XOO

OOX
455
B3
1/1/11

PUMP 6
HOA IN AUTO

CR401
456
B2
1/1/10

PUMP 6
RUNNING

CR402
457
B4
1/1/12

PUMP 6
OVERLOAD

OL401
458
CR402
A14

PUMP 6
OVERLOAD
NO 104-25,104-31
NC

CR402
459
PL401
R

PUMP 6
OVERLOAD

LT
400
+
-

400
401
SH

SP400
<-LINE EQUIP->
SHIELD
EARTH

460
461

1+
1-
AI
1/4/1

WELL 6
DRAWDOWN LEVEL
[0 - 20 FT]

* PROVIDED BY OTHERS

DATE LAST PLOTTED: 8/12/2014 1:05 PM PATH AND FILENAME: P:\2800-2899\2848 - SAND COULEE, MT - WATER\ACAD\2848A-104.DWG

APPROVAL DRAWINGS
DO NOT USE FOR CONSTRUCTION
8/4/14

HEALY-RUFF

DATE	REVISION DESCRIPTION
8/4/14	APPROVAL DRAWINGS

water and wastewater control solutions
ICS HEALY-RUFF
Instrument Control Systems, Inc.
13005 16th Avenue North, Suite 100, Plymouth, MN 55441
Ph: (763) 559-0568 Fax: (763) 559-2187 www.icshealyruff.com

(C) 2010, CONFIDENTIAL, PROPRIETARY INFORMATION NOT TO BE DISCLOSED, ALL RIGHTS RESERVED BY INSTRUMENT CONTROL SYSTEMS, INC.

DATE	8/4/14
DWN	JSS
CKD.	GK
ENGR.	JSS
ASSEM.	
SHEET	10 OF 17

PROJECT
SAND COULEE, MT

WELL HOUSE CP
PUMP 6
CONTROL WIRING

PROJ. NO. 2848A
DWG. NO. 104

FIELD OR AS NOTED

CONTROL PANEL

IN

HEALY-RUFF
324300-214

LT
500

L
N

500
501
SH

SP500
<-LINE EQUIP->
SHIELD
EARTH

SP

CITEL
DLA-24D3

550
551

1+
1-

AI
1/3/1

RESERVOIR LEVEL
[0 - 230 FT]

1 3

4 N

DATE LAST PLOTTED: 8/12/2014 1:05 PM PATH AND FILENAME: P:\2800-2899\2848 - SAND COULEE, MT - WATER\ACAD\2848A-105.DWG

APPROVAL DRAWINGS
DO NOT USE FOR CONSTRUCTION
8/4/14

HEALY-RUFF

DATE	REVISION DESCRIPTION
8/4/14	APPROVAL DRAWINGS

water and wastewater control solutions
ICS HEALY-RUFF
Instrument Control Systems, Inc.
13005 16th Avenue North, Suite 100, Plymouth, MN 55441
Ph: (763) 559-0568 Fax: (763) 559-2187 www.icshealyruff.com

(C) 2012, CONFIDENTIAL, PROPRIETARY INFORMATION NOT TO BE DISCLOSED, ALL RIGHTS RESERVED BY INSTRUMENT CONTROL SYSTEMS, INC.

DATE	8/4/14
DWN	JSS
CKD.	GK
ENGR.	JSS
ASSEM.	
SHEET	11 OF 17

PROJECT
SAND COULEE, MT
WELL HOUSE CP
RESERVOIR LEVEL
CONTROL WIRING

PROJ. NO. 2848A
DWG. NO. 105

FIELD OR AS NOTED

CONTROL PANEL

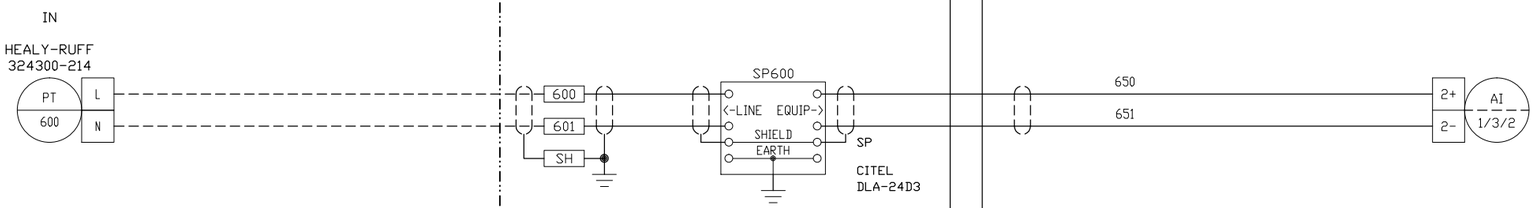

1 3

4 N

DATE LAST PLOTTED: 8/12/2014 1:05 PM PATH AND FILENAME: P:\2800-2899\2848 - SAND COULEE, MT - WATER\ACAD\2848A-106.DWG

APPROVAL DRAWINGS
DO NOT USE FOR CONSTRUCTION
8/4/14

HEALY-RUFF

DATE	REVISION DESCRIPTION
8/4/14	APPROVAL DRAWINGS

water and wastewater control solutions
ICS HEALY-RUFF
Instrument Control Systems, Inc.
13005 16th Avenue North, Suite 100, Plymouth, MN 55441
Ph: (763) 559-0568 Fax: (763) 559-2187 www.icshealyruff.com

(C) 2012, CONFIDENTIAL, PROPRIETARY INFORMATION NOT TO BE DISCLOSED, ALL RIGHTS RESERVED BY INSTRUMENT CONTROL SYSTEMS, INC.

DATE	8/4/14
DWN	JSS
CKD.	GK
ENGR.	JSS
ASSEM.	
SHEET	12 OF 17

PROJECT
SAND COULEE, MT
WELL HOUSE CP
SYSTEM PRESSURE
CONTROL WIRING

PROJ. NO. 2848A
DWG. NO. 106

FIELD OR AS NOTED

CONTROL PANEL

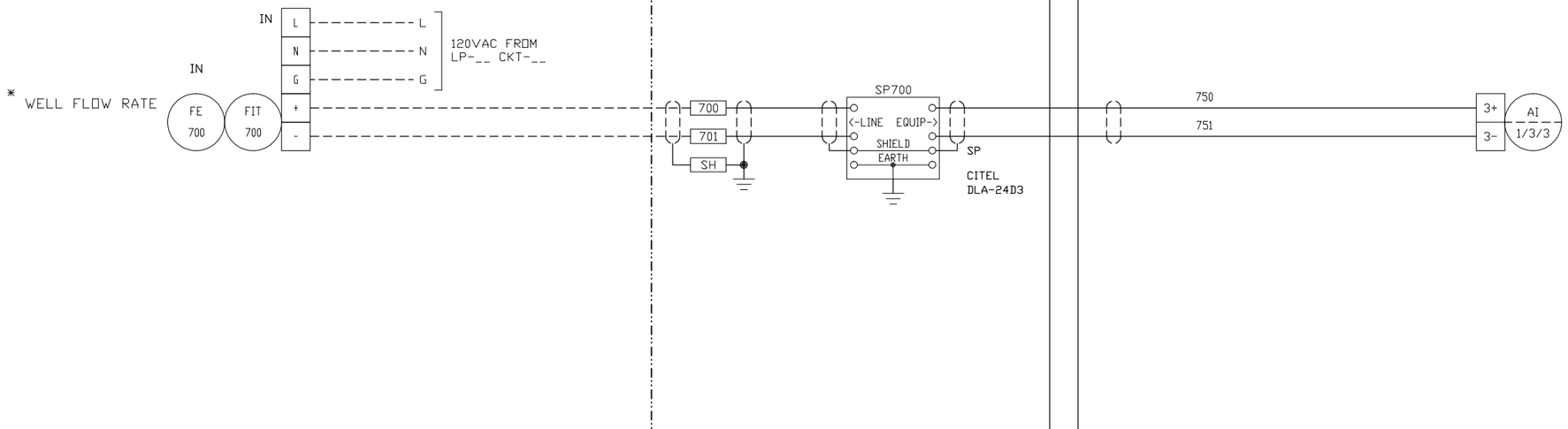

* PROVIDED BY OTHERS

DATE LAST PLOTTED: 8/12/2014 1:05 PM PATH AND FILENAME: P:\2800-2899\2848 - SAND COULEE, MT - WATER\ACAD\2848A-107.DWG

APPROVAL DRAWINGS
DO NOT USE FOR CONSTRUCTION
8/4/14

HEALY-RUFF

DATE	REVISION DESCRIPTION
8/4/14	APPROVAL DRAWINGS

water and wastewater control solutions
ICS HEALY-RUFF
Instrument Control Systems, Inc.
13005 16th Avenue North, Suite 100, Plymouth, MN 55441
Ph: (763) 559-0568 Fax: (763) 559-2187 www.icshealyruff.com

(C) 2012, CONFIDENTIAL, PROPRIETARY INFORMATION NOT TO BE DISCLOSED, ALL RIGHTS RESERVED BY INSTRUMENT CONTROL SYSTEMS, INC.

DATE	8/4/14
DWN	JSS
CKD.	GK
ENGR.	JSS
ASSEM.	
SHEET	13 OF 17

PROJECT
SAND COULEE, MT
WELL HOUSE CP
WELL FLOW
CONTROL WIRING

PROJ. NO. 2848A
DWG. NO. 107

FIELD OR AS NOTED

CONTROL PANEL

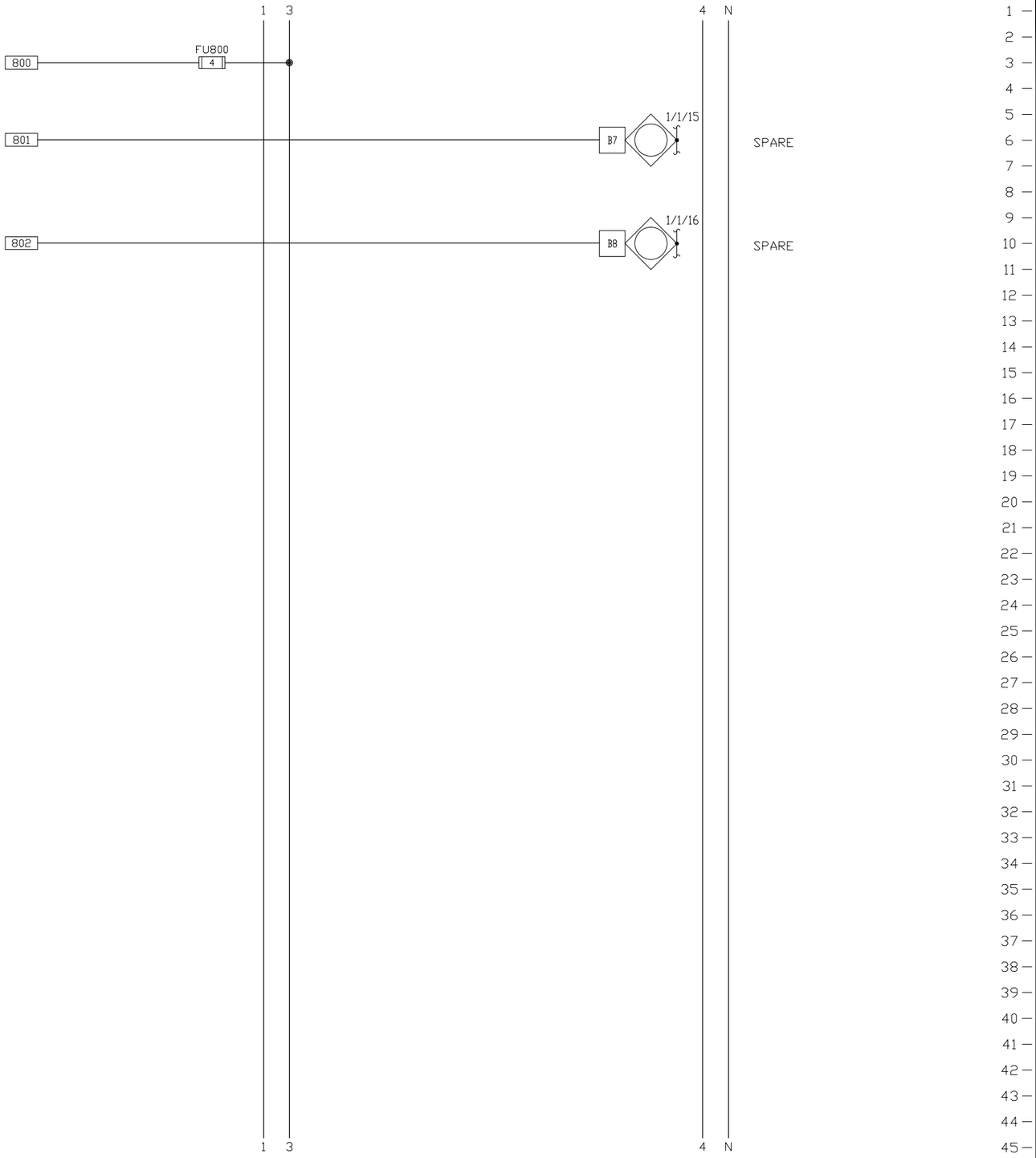

DATE LAST PLOTTED: 8/12/2014 1:05 PM PATH AND FILENAME: P:\2800-2899\2848 - SAND COULEE, MT - WATER\ACAD\2848A-108.DWG

APPROVAL DRAWINGS
DO NOT USE FOR CONSTRUCTION
8/4/14

HEALY-RUFF

DATE	REVISION DESCRIPTION
8/4/14	APPROVAL DRAWINGS

water and wastewater control solutions
ICS HEALY-RUFF
Instrument Control Systems, Inc.
13005 16th Avenue North, Suite 100, Plymouth, MN 55441
Ph: (763) 559-0568 Fax: (763) 559-2187 www.icshealyruff.com

(C) 2010, CONFIDENTIAL, PROPRIETARY INFORMATION NOT TO BE DISCLOSED, ALL RIGHTS RESERVED BY INSTRUMENT CONTROL SYSTEMS, INC.

DATE	8/4/14
DWN	JSS
CKD.	GK
ENGR.	JSS
ASSEM.	
SHEET	14 OF 17

PROJECT
SAND COULEE, MT

WELL HOUSE CP
DIGITAL INPUT
CONTROL WIRING

PROJ. NO. 2848A

DWG. NO. 108

FIELD OR AS NOTED	CONTROL PANEL

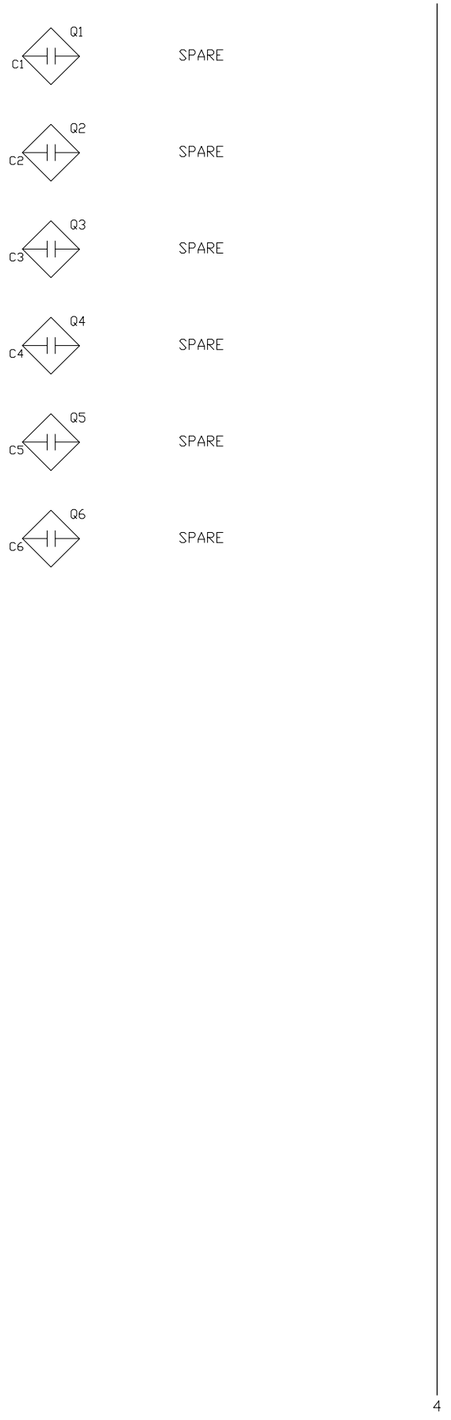

DATE LAST PLOTTED: 8/12/2014 1:05 PM PATH AND FILENAME: P:\2800-2899\2848 - SAND COULEE, MT - WATER\ACAD\2848A-109.DWG

APPROVAL DRAWINGS
DO NOT USE FOR CONSTRUCTION
8/4/14

HEALY-RUFF

DATE	REVISION DESCRIPTION
8/4/14	APPROVAL DRAWINGS

water and wastewater control solutions
ICS HEALY-RUFF
Instrument Control Systems, Inc.
13005 16th Avenue North, Suite 100, Plymouth, MN 55441
Ph: (763) 559-0568 Fax: (763) 559-2187 www.icshealyruff.com

(C) 2010, CONFIDENTIAL, PROPRIETARY INFORMATION NOT TO BE DISCLOSED, ALL RIGHTS RESERVED BY INSTRUMENT CONTROL SYSTEMS, INC.

DATE	8/4/14
DWN	JSS
CKD.	GK
ENGR.	JSS
ASSEM.	
SHEET	15 OF 17

PROJECT
SAND COULEE, MT

WELL HOUSE CP
DIGITAL OUTPUT
CONTROL WIRING

PROJ. NO. 2848A
DWG. NO. 109

FIELD OR AS NOTED

CONTROL PANEL

AI1	AI AI1	SPARE	
AI2	AI AI2	SPARE	
AI3	AI AI3	SPARE	
AI4	AI AI4	SPARE	
2+ / 2-	AI 1/4/2	SPARE	
3+ / 3-	AI 1/4/3	SPARE	
4+ / 4-	AI 1/4/4	SPARE	

1 3 — 4 N

DATE LAST PLOTTED: 8/12/2014 1:05 PM PATH AND FILENAME: P:\2800-2899\2848 - SAND COULEE, MT - WATER\ACAD\2848A-110.DWG

APPROVAL DRAWINGS
DO NOT USE FOR CONSTRUCTION
8/4/14

HEALY-RUFF

DATE	REVISION DESCRIPTION
8/4/14	APPROVAL DRAWINGS

water and wastewater control solutions
ICS HEALY-RUFF
Instrument Control Systems, Inc.
13005 16th Avenue North, Suite 100, Plymouth, MN 55441
Ph: (763) 559-0568 Fax: (763) 559-2187 www.icshealyruff.com

(C) 2010, CONFIDENTIAL, PROPRIETARY INFORMATION NOT TO BE DISCLOSED, ALL RIGHTS RESERVED BY INSTRUMENT CONTROL SYSTEMS, INC.

DATE	8/4/14
DWN	JSS
CKD.	GK
ENGR.	JSS
ASSEM.	
SHEET	16 OF 17

PROJECT
SAND COULEE, MT

WELL HOUSE CP
ANALOG INPUT
CONTROL WIRING

PROJ. NO. 2848A
DWG. NO. 110

FIELD OR AS NOTED

CONTROL PANEL

1 3 4 N

1+ / 1-	AO 1/5/1	SPARE	
2+ / 2-	AO 1/5/2	SPARE	
3+ / 3-	AO 1/5/3	SPARE	
4+ / 4-	AO 1/5/4	SPARE	

1 3 4 N

DATE LAST PLOTTED: 8/12/2014 1:05 PM PATH AND FILENAME: P:\2800-2899\2848 - SAND COULEE, MT - WATER\ACAD\2848A-111.DWG

APPROVAL DRAWINGS
DO NOT USE FOR CONSTRUCTION
8/4/14

HEALY-RUFF

DATE	REVISION DESCRIPTION
8/4/14	APPROVAL DRAWINGS

water and wastewater control solutions
ICS HEALY-RUFF
Instrument Control Systems, Inc.
13005 16th Avenue North, Suite 100, Plymouth, MN 55441
Ph: (763) 559-0568 Fax: (763) 559-2187 www.icshealyruff.com

(C) 2010, CONFIDENTIAL, PROPRIETARY INFORMATION NOT TO BE DISCLOSED, ALL RIGHTS RESERVED BY INSTRUMENT CONTROL SYSTEMS, INC.

DATE	8/4/14
DWN	JSS
CKD.	GK
ENGR.	JSS
ASSEM.	
SHEET	17 OF 17

PROJECT
SAND COULEE, MT
WELL HOUSE CP
ANALOG OUTPUT
CONTROL WIRING

PROJ. NO. 2848A
DWG. NO. 111

08/12/14

GREAT FALLS SAND & GRAVEL

FOR ALL YOUR CONSTRUCTION NEEDS

Phone: 761-5400 P.O. BOX 1989 GREAT FALLS, MT 59403

BOLAND CONSTRUCTION

PROJECT: SAND COULEE WATER SYSTEM

We are submitting the following mix design for approval on the referenced project:

5/8 Asphalt

1090 Lbs Fines
320 Lbs Int.
470 Lbs Course
120 Lbs Oil PG 58-28

Equals One Ton Batch

CALUMET
MONTANA REFINING, LLC

1900 10th Street NE Great Falls, MT 59404
Main Phone: 406-761-4100 Administration/Marketing/Main Office Fax: 406-761-0174 Refinery Office Fax: 406-761-0777
www.calumetspecialty.com

April 17, 2014

Great Falls Sand & Gravel
Attn: **Jerry Gates**
P.O. Box 1989
Great Falls, MT 59403

Mr. Gates:

Calumet Montana Refining LLC certifies that shipments of PG 58-28 to Great Fall Sand & Gravel from our Great Falls refinery during 2014 will comply with the Montana Highway Department Standard Specifications when taken in minimum loads of 1500 gallons. All testing and verification of specifications follow ASTM testing procedures.

Further, we certify that the conveyance was inspected and found to be free of contaminating material.

Sincerely,

Brian Marler
Heavy Products Marketing Rep.
Calumet Montana Refining, LLC

CALUMET
MONTANA REFINING, LLC

1900 10th Street NE Great Falls, MT 59404
Main Phone: 406-761-4100 Administration/Marketing/Main Office Fax: 406-761-0174 Refinery Office Fax: 406-761-0777
www.calumetspecialty.com

April 17, 2014

Great Falls Sand & Gravel
Attn: **Jerry Gates**
P.O. Box 1989
Great Falls, MT 59403

Mr. Gates:

Calumet Montana Refining LLC certifies that shipments of SS-1 to Great Fall Sand & Gravel from our Great Falls refinery during 2014 will comply with the Montana Highway Department Standard Specifications when taken in minimum loads of 1500 gallons. All testing and verification of specifications follow ASTM testing procedures. Calumet Montana Refining LLC does not guarantee that our SS-1 will pass the cement mixing test under ASTM D-977.

Further, we certify that the conveyance was inspected and found to be free of contaminating material.

Sincerely,

Brian Marler
Heavy Products Marketing Rep.
Calumet Montana Refining, LLC

MONTANA REFINING COMPANY, INC.

1900 TENTH STREET N.E.
GREAT FALLS, MONTANA 59404
(406) 761-4100 (24 Hours)

MATERIAL SAFETY DATA SHEET
ASPHALT CEMENT

EMERGENCY PHONE NUMBERS:
CHEMTREC: 1-800-424-9300 (for fire, spill, and emergency response information)
GREAT FALLS POISON CONTROL CENTER: 1-800-525-5042 (for poisoning)
SPOKANE POISON CONTROL CENTER: 1-800-732-6985 (for poisoning)

SECTION 1 - PRODUCT IDENTIFICATION

PRODUCT NAME: ASPHALT CEMENT
CAS NUMBER: 8052-42-4
FORMULA: N.A.
CHEMICAL FAMILY: Petroleum hydrocarbon

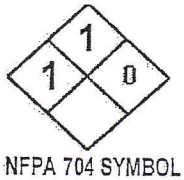

NFPA 704 SYMBOL

SYNONYMS: 120-150, 120-150A, 150-200A, 200-300A, 85-100, PG 64-22, PG 58-28, PG 58-22, UN3257

SECTION 2 - HAZARDOUS INGREDIENTS

HAZARDOUS COMPONENTS	CAS NO.	RETEC#	VOL%	TLV(8 Hr TWA)	PEL(8 Hr TWA)	STEL	IDLH
ASPHALT (containing)	8052-42-4	CI9900000	0-100	0.5 mg/m$^{3(fumes)}$	--	--	--
Hydrogen Sulfide*	7783-06-4	MX1225000	<0.1	10 ppm	20ppm	15 ppm	100 ppm

(2)= ACGIH (3)= NIOSH (s)= skin notation

Note: **Hydrogen sulfide can slowly evolve at elevated temperatures, which can accumulate in enclosed places.** Hydrogen Sulfide has an OSHA PEL ceiling of 20 ppm and a maximum peak of 50 ppm. NIOSH lists asphalt as a combustible solid. Asphalt becomes molten at about 200° Fahrenheit.

OTHER INGREDIENT INFORMATION: Asphalt is a complex mixture of paraffinic, aromatic, and naphthenic hydrocarbons. At high temperatures, petroleum asphalt fumes (CAS No. 8052-42-4) may be present. NIOSH has a ceiling limit of 5 mg/m^3 for asphalt fumes. The various grades of asphalt differ in viscosity; all are essentially the same in composition.

SECTION 3 - PHYSICAL DATA

BOILING POINT:	>700°F
FLASH POINT:	>440°F
VAPOR PRESSURE:	N.A.
VAPOR DENSITY (AIR=1):	N.A.
SOLUBILITY IN WATER:	Insoluble
APPEARANCE:	Black semi-solid at room temperature with no appreciable odor
ODOR:	Petroleum (Tar Like)
SPECIFIC GRAVITY (WATER=1):	0.78 - 0.84
AUTOIGNITION TEMP:	N.A.
Physical Hazard:	THERMAL BURN HAZARD

SECTION 4 - FIRE AND EXPLOSION HAZARD DATA

CLASSIFICATION: CLASS IIIB, COMBUSTIBLE LIQUID
FLASH POINT: >400°F (COC)
FLAMMABLE LIMITS: LEL = N.A. UEL = N.A.
EXTINGUISHING MEDIA: Dry chemical, CO_2
SPECIAL FIRE FIGHTING PROCEDURES: Move container from fire area if possible. Use water to keep fire exposed containers cool.
UNUSUAL FIRE AND EXPLOSION HAZARDS: Evacuate a radius of 1500 feet for uncontrolled fires. Water for foam may cause frothing and evolution of steam. Fumes may accumulate from low boiling hydrocarbons and hydrogen sulfide. Iron sulfide may also accumulate. Combustion or thermal decomposition may cause the release of toxic gases.
NFPA FIRE = 1 (low)

SECTION 5 - REACTIVITY DATA

STABILITY: Stable
HAZARDOUS POLYMERIZATION: Will not occur
CONDITIONS TO AVOID/INCOMPATABILITY: Strong oxidizers
HAZARDOUS DECOMPOSITION PRODUCTS: Carbon monoxide, Carbon Dioxide and Sulfur Dioxide
NFPA REACTIVITY = 0 (minimal)

SECTION 6 - HEALTH HAZARD DATA

TARGET ORGANS(@ Elevated temperatures): eyes, respiratory system

ROUTES OF ENTRY: At room temperature asphalt is a solid. At elevated temperatures there may be inhalation of fumes or skin contact.

HEALTH HAZARDS: Dermititis, eye, skin or lung irritation. Hot asphalt can cause severe burns. Possibility of skin cancer.

CARCINOGENICITY: Asphalt is not listed by NTP or OSHA. NIOSH lists asphalt fumes as carcinogenic. Bitumens[8052-42-4] steam-refined, cracking-residue, and air-refined are listed by IARC under Group 3 as unclassifiable as to the carcinogencity to humans. Extracts of steam-refined and air refined bitumens are listed under group 2B as possibly carcinogenic to humans.

SIGNS AND SYMPTOMS OF EXPOSURE: Skin and eye irritation, irritation of nose and throat, burns from contact with hot asphalt. Hydrogen sulfide can cause conjunctivitis, headaches, dizziness, fatigue, irritability, insomnia, convulsions, unconsciousness, and death.

EMERGENCY AND FIRST AID PROCEDURES:
INHALATION: Maintain respirations, assist with artificial respiration if needed and give oxygen if available and trained to do so. Seek medical attention.
BURNS: Immediately cool skin by quenching with cold water. Cover with a sterile dressing and seek medical assistance.
Eye/skin contact: Immediately flush skin or eyes with running water for at least 20 minutes. Isolate and remove contaminated clothing. Wash skin with soap and water and seek medical assistance.

NFPA HEALTH = 1(low)*
*only @ elevated temperatures; otherwise a 0

SECTION 7 – PRECAUTIONS FOR SAFE HANDLING AND USE

STEPS TO BE TAKEN IN CASE MATERIAL IS RELEASED OR SPILLED: Contain spill. Can absorb or cover with dry earth, sand, or other non-combustible material. Allow to cool. Remove sources of ignition. Pick up with shovels or tractors. Place in appropriate waste containers.

WASTE DISPOSAL: Dispose in accordance with RCRA regulations. Do not put in sewers or any water course.

PRECAUTIONS TO BE TAKEN IN HANDLING AND STORAGE: Asphalt is normally stored at high temperatures. It can cause severe burns.

OTHER PRECAUTIONS: Avoid breathing vapors. Always wear protective equipment and clothing when handling hot asphalt. Do not weld on containers unless they have been properly cleaned and purged using safe work practices.

SECTION 8 – ENVIRONMENTAL AND SPECIAL PROTECTION INFORMATION

RESPIRATORY PROTECTION: Use NIOSH\MSHA approved respiratory protection in areas exceeding exposure limits, the type to be determined by the degree of exposure.

VENTILATION: Use in well ventilated area. Mechanical exhaust should be explosion proof.

EYE/SKIN PROTECTION: Full face protection, heavy leather gloves, and coveralls with long sleeves.

WORK/HYGIENIC PRACTICES: Remove contaminated clothing as soon as possible. Always wash after handling hazardous chemicals.

SECTION 9 - SHIPPING DATA

DOT

Identification #: UN3257
Shipping name: Elevated temperature material, N.O.S. (ASPHALT)
Hazard class/division: 9
Packing group: III
Label: 9
Placard required: Class 9

Product is not regulated when shipped at temperatures below 212F and its flash point.

IATA

Forbidden

Product is not regulated when shipped at temperatures below 212 F and its flash point. May only be shipped by air if it is below both 212F and its flash point.

REFER TO DEPARTMENT OF TRANSPORTATION (DOT) EMERGENCY RESPONSE GUIDEBOOK GUIDE 128 FOR ADDITIONAL EMERGENCY INFORMATION.

This information is believed to be accurate and as reliable as information available to us. We make no warranty or guarantee as to its accuracy and assume no liability from its use. Users should determine the suitability of the information for their particular purposes.

United Materials

PO Box 1690
Great Falls, MT 59403-1690

Product

5/8" General Purpose Mix Design

Tested By	JDD	TIME 12:40 PM	
Sampled By	GARY		
Date Sampled	11/13/2013	Job #	12882
Date Tested	11/13/2013	Sampled From	CMI PLANT
Date Finished	11/13/2013	Used For	
Test #	A		

Wet Weight of Sample (g)	1767.50	
Dry Weight of Sample (g)	1742.70	
Dry Wt. After Wash (g)	1642.60	
Percent Moisture	1.42%	
Loss by Wash (Wt. and Pctg.)	100.10	5.74%

Sieve	Wt Retained Cumm.	Indiv. Weight	% Retained Cumm.	% Passing	Specification	Tolerance	Target
5/8"	0.00	0.00	0.00%	100%	100%		100
1/2"	104.60	104.60	6.00%	94%	83% - 93%		93
3/8"	461.40	356.80	26.48%	74%	73% - 87%		78
#4	885.40	424.00	50.81%	49%	47% - 63%		55
#10	1261.50	376.10	72.39%	28%	32% - 43%		35
#40	1475.80	214.30	84.68%	15%	15% - 25%		19
#80	1569.50	93.70	90.06%	10%	-		
#200	1633.40	63.90	93.73%	6.3%	5% - 7%		6.3
Pan Wt.	1642.20	8.80					

Test Validation 0.0% <0.3% Required

% Fracture 1 Face

% Fracture 2 Face

% Moisture 1.42%

United Materials

PO Box 1690
Great Falls, MT 59403-1690

Product
1/4" CRUSHED FINES

Tested By	JDD	TIME 9:30 AM	
Sampled By	JDD		
Date Sampled	11/14/2013	Job #	
Date Tested	11/14/2013	Sampled From	CRUSHER
Date Finished	11/14/2013	Used For	
Test #	A		
Wet Weight of Sample (g)	1395.40		
Dry Weight of Sample (g)	1365.10		
Dry Wt. After Wash (g)	1263.50		
Percent Moisture	2.22%		
Loss by Wash (Wt. and Pctg.)	101.60	7.44%	

Sieve	Wt Retained Cumm.	Indiv. Weight	% Retained Cumm.	% Passing	TARGET	Tolerance
3/8"	0.00	0.00	0.00%	100%	100%	
1/4"	37.10	37.10	2.72%	97%	100%	
#4	191.70	154.60	14.04%	86%	87%-93%	
#10	734.80	543.10	53.83%	46%	48%-54%	
#40	1061.80	327.00	77.78%	22%	24%-30%	
#80	1176.30	114.50	86.17%	14%	14% 20%	
#100	1197.40	21.10	87.72%	12%	-	
#200	1251.60	54.20	91.69%	8.3%	7%-11%	
Pan Wt.	1263.00	11.40				

Test Validation 0.0% <0.3% Required

% Fracture 1 Face
% Fracture 2 Face
% Moisture 2.22%

United Materials

PO Box 1690
Great Falls, MT 59403-1690

Product
1/2" GEN PURPOSE MIX DESIGN

Tested By	JDD
Sampled By	GARY
Date Sampled	9/25/2012
Date Tested	9/25/2012
Date Finished	9/25/2012
Test #	1

Wet Weight of Sample	1768.60
Dry Weight of Sample	1745.90
Dry Wt. After Wash	1643.90
Percent Moisture	1.30%
Loss by Wash	102.00 5.84%

Job #	1281
Sampled From	CMI PLANT
Used For	

Sieve	Wt Retained Cumm.	Indiv. Weight	% Retained Cumm.	% Passing	Spec.	Tolerance
1/2"	0.00	0.00	0.00%	100.0%	100%	
3/8"	137.40	137.40	7.87%	92.1%	90% - 100%	95
#4	813.00	675.60	46.57%	53.4%	50% - 72%	60
#10	1207.60	394.60	69.17%	30.8%	33% - 47%	38
#20	1379.00	171.40	78.99%	21.0%		
#40	1465.40	86.40	83.93%	16.1%	15% - 27%	19
#80	1567.00	101.60	89.75%	10.2%		
#100	1583.20	16.20	90.68%	9.3%		
#200	1634.40	51.20	93.61%	6.4%	4% - 10%	6.1
			% Fracture 1			
Pan Wt.	1643.30	8.90	% Fracture 2			
			% Moisture	1.30%		

ASPHALT LABORATORY TEST REPORT

Report Number: C4091164.0037

Service Date: 08/05/13
Report Date: 08/15/13

A Terracon Company
1392 13th Ave. SW
Great Falls, MT 59404
406-453-5400

Client

Great Falls Sand & Gravel
Attn: Jerry Gates
PO Box 1989
Great Falls, MT 59403

Project

Misc - Great Falls Sand & Gravel
Materials Testing
Great Falls, MT

Project Number C4091164

TEST DESCRIPTION

On August 5, 2013, we sampled asphaltic concrete from Holiday Casino and Lounge overlay project. The hot mix was returned to our laboratory where Marshall specimens were compacted immediately. The hot mix sample was also tested to determine aggregate gradation and asphalt cement content. Results of the test for aggregate gradation, asphalt cement content, and Marshall properties, are presented below.

Holiday Casino and Lounge
Holiday Village

Date Sampled:	08/5/13	
Time Sampled:	11:40 a.m.	Mt. Public Works
Sample Location:	12' So. and 25' East of S.W. corner of Bldg. (Parking Lot Overlay)	Section 02510

Screen or Sieve Size	Percent Passing Screen or Sieve Size	Target Values	Job Mix Tolerances
3/4"	100	100	
1/2"	95	93	±7
3/8"	78	78	±7
No.4	55	55	±6
No.10	28	32	±6
No.20	18		
No.40	14	15	±5
No.80	10		
No.100	9		
No.200	6.0	6.0	±2
Asphalt Content, %	6.12		
Sample Temperature, F	305		
Marshall Stability, Lbs.	1849	1200 Min.	
Marshall Flow, 0.01 in.	14	8-18	
Marshall Density, pcf	143.6		
VMA, %	16.7	13 Min.	
Theoretical Max. Sp. G. (Rices)	2.401 (149.4 pcf)		
Voids, Total Mix	3.9	3-5	
Voids, Filled with Asphalt	76.6		

Services:

Terracon Rep.: Shoquist, Keith
Reported To:
Contractor: Great Falls S & G
Report Distribution:
(1) Great Falls Sand & Gravel

Reviewed By: Kenneth E. Munski

Munski, Kenneth
Senior Materials Engineer

The tests were performed in general accordance with applicable ASTM, AASHTO, or DOT test methods. This report is exclusively for the use of the client indicated above and shall not be reproduced except in full without the written consent of our company. Test results transmitted herein are only applicable to the actual samples tested at the location(s) referenced and are not necessarily indicative of the properties of other apparently similar or identical materials.

08/12/14

GREAT FALLS SAND & GRAVEL

FOR ALL YOUR CONSTRUCTION NEEDS

Phone: 761-5400 P.O. BOX 1989 GREAT FALLS, MT 59403

BOLAND CONSTRUCTION

PROJECT: SAND COULEE WATER SYSTEM

We are submitting the following for approval on the referenced project:

1 1/2 BASE COURSE

-1 1/2" BASE COURSE (RANCH PIT) 2014 TEST REPORT

Report Number: C4141116.0001
Service Date: 02/14/14
Report Date: 02/18/14

1392 13th Ave. SW
Great Falls, MT 59404
406-453-5400

Client

United Materials
Attn: Lonnie Anderson
PO Box 1690
Great Falls, MT 59403-1690

Project

Ranch Pit - United Materials
McIver Road
Great Falls, MT 59404

Project Number: C4141116

Test Description

On January 29, 2014, we received a sample of -1 1/2" crushed base course material. We were instructed to perform a sieve analysis on course and fine aggregate in accordance with ASTM C136 and C117, liquid limit, plasticity index in accordance with AASHTO T89 and T90, fractured faces count in accordance with ASTM D5821, and moisture density relationship in accordance with AASHTO T99 and T180. The test results are presented below and on the following reports.

	Ranch Pit -1 1/2" Crushed Base Course	Montana Public Works *Section 02235* Specification
Screen or Sieve Size	Percent Passing Screen or Sieve Size	
1 ½"	100	100
1"	100	
3/4"	89	
1/2"	59	
3/8"	51	
No.4	35	25-60
No.10	25	
No.20	20	
No.40	18	
No.80	10	
No.100	8	
No.200	4.3	0-8
Liquid Limit, %	Granular	25 Max.
Plasticity Index, %	Non-Plastic	6 Max.
Fractured Faces, % 1 or more	89.1	35 Min.
Maximum Density, pcf (AASHTO T99)	135.2	
Optimum Moisture, % (Standard)	7.8	
Maximum Density, pcf (AASHTO T180)	138.0	
Optimum Moisture, % (Modified)	6.2	

Terracon Rep.: Shoquist, Keith
Reported To:
Contractor:
Report Distribution:
(1) United Materials
lonnie.anderson@unitedmaterialsgf.com

Reviewed By:

Shoquist, Keith R.
Laboratory Manager SET

Tests were performed in general accordance with applicable ASTM, AASHTO, or DOT test methods. This report is exclusively for the use of the client indicated above and shall not be reproduced except in full without the written consent of our company. Test results transmitted herein are only applicable to the actual samples tested at the location(s) referenced and are not necessarily indicative of the properties of other apparently similar or identical materials.

LABORATORY COMPACTION CHARACTERISTICS OF SOIL REPORT

Report Number: C4141116.0002
Service Date: 02/14/14
Report Date: 02/18/14

Terracon
1392 13th Ave. SW
Great Falls, MT 59404
406-453-5400

Client

United Materials
Attn: Lonnie Anderson
PO Box 1690
Great Falls, MT 59403-1690

Project

Ranch Pit - United Materials
McIver Road
Great Falls, MT 59401

Project Number C4141116

Material Information

Source of Material: Ranch Pit
Proposed Use: -1 1/2" Crushed Base Course

Sample Information

Sample Date: 01/29/14
Sampled By: Client
Sample Location: Ranch Pit

Sample Description: -1 1/2" Crushed Base Course

Laboratory Test Data

Test Procedure: AASHTO T99
Test Method: Method D
Sample Preparation: Wet
Rammer Type: Manual
Maximum Dry Unit Weight (pcf): 135.2
Optimum Water Content (%): 7.8

	Result	Specifications
Liquid Limit:	Non-plastic	
Plastic Limit:	Non-plastic	
Plasticity Index:	Non-plastic	
In-Place Moisture (%):		
Passing 1 1/2" (%):	100.0	
Passing #4 (%):	35.0	
USCS:	Gravel with Silt and Sand	

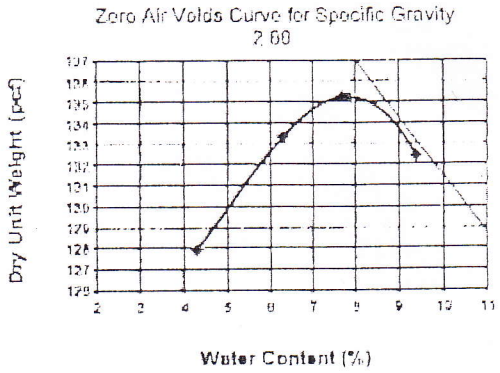

Comments: Standard Proctor.

Services:

Terracon Rep.: Chapman, R
Reported To:
Contractor:
Report Distribution:
(1) United Materials,
lonnie.anderson@unitedmaterialsgtf.com

Reviewed By: Shoquist, Keith
Laboratory Manager, SET

Test Methods: AASHTO T99

The tests were performed in general accordance with applicable ASTM, AASHTO, or DOT test methods. This report is exclusively for the use of the client indicated above and shall not be reproduced except in full without the written consent of our company. Test results transmitted herein are only applicable to the actual samples tested at the location(s) referenced and are not necessarily indicative of the properties of other apparently similar or identical materials.

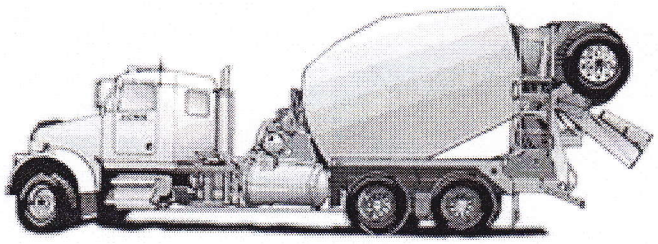

GREAT FALLS REDI - MIX, Inc.
for all your concrete needs
Phone: 761-5400 P.O. BOX 1989 GREAT FALLS, MT 59403

BOLAND CONSTRUCTION

PROJECT: Sand Coulee Water System

TYPE V
4000# CONCRETE

We are submitting the following mix design for approval on the referenced project:

CEMENT	462 POUNDS PER CUBIC YARD
FLY ASH	103 POUNDS PER CUBIC YARD
SAND	1270 POUNDS PER CUBIC YARD
3/4"	1780 POUNDS PER CUBIC YARD
AEA	1.6 OZ PER 100 LB CEMENTITIOUS MATERIAL
WATER	27.13 GALLONS PER CUBIC YARD = w/c 0.40
POLY 997	4.0 OZ PER 100 LB CEMENTITIOUS MATERIAL
DELVO STABILIZER	AS NEEDED FOR TRANSPORT
GELINUM 3030	PLASTISIZER AS NEEDED.

Note: GFRM requests copies of concrete tests for this project as soon as they are available, to assure we are supplying you with the best product possible.

Holcim

Material Certification Report

Material:	Portland Cement	Test Period:	01-Mar-2014
Type:	V	To:	31-Mar-2014

Certification

This Holcim cement meets the specifications of ASTM C150 for Type V cement.

General Information

Supplier:	Holcim (US) Inc.	Source Location:	Trident Plant
Address:	4070 Trident Road Three Forks, MT 59752		4070 Trident Road Three Forks, MT 59752
Telephone:	406-285-4964	Contact:	Gail B Amicucci
Date Issued:	03-Apr-2014		

The following information is based on average test data during the test period.
The data is typical of cement shipped by Holcim; individual shipments may vary.

Tests Data on ASTM Standard Requirements

Chemical

Item	Limit[A]	Result
SiO_2 (%)	-	20.6
Al_2O_3 (%)	-	3.9
Fe_2O_3 (%)	-	3.1
CaO (%)	-	64.2
MgO (%)	6.0 max	2.8
SO_3 (%)	2.3 max[B]	2.9
Loss on Ignition (%)	3.0 max	2.6
Insoluble Residue (%)	0.75 max	0.43
CO_2 (%)	-	1.7
Limestone (%)	5.0 max	4.0
$CaCO_3$ in Limestone (%)	70 min	94
Inorganic Processing Addition (%)	5.0 max	2.8
Potential Phase Compositions[C]:		
C_3S (%)	-	58
C_2S (%)	-	14
C_3A (%)	5 max	5
C_4AF (%)	-	9

Physical

Item	Limit[A]	Result
Air Content (%)	12 max	7
Blaine Fineness (m^2/kg)	260 min	416
Autoclave Expansion (%) (C151)	0.80 max	0.01
Compressive Strength MPa (psi):		
3 days	8.0 (1160) min	28.8 (4180)
7 days	15.0 (2180) min	37.2 (5400)
Initial Vicat (minutes)	45-375	156
Mortar Bar Expansion (%) (C1038)	-	0.011

Tests Data on ASTM Optional Requirements

Chemical

Item	Limit[A]	Result
Equivalent Alkalies (%)	0.60 max	0.41

Physical

Item	Limit[A]	Result

Notes

[A] Dashes in the limit / result columns mean Not Applicable.

[B] It is permissible to exceed the specification limit provided that ASTM C1038 Mortar Bar Expansion does not exceed 0.020 % at 14 days.

[C] Adjusted per Annex A1.6 of ASTM C150 and AASHTO M85.

[D] Test result represents most recent value and is provided for information only. Analysis of Heat of Hydration has been carried out by CTLGroup, Skokie, IL. This data may have been reported on previous mill certificates.

Additional Data

Inorganic Processing Addition Data

Item	Result[A]
Type	Kiln Dust
Amount (%)	3
SiO_2 (%)	16
Al_2O_3 (%)	4
Fe_2O3 (%)	2
CaO (%)	47
SO_3 (%)	4

Base Cement Phase Composition

Item	Result
C_3S (%)	62
C_2S (%)	15
C_3A (%)	5
C_4AF (%)	10

HEADWATERS RESOURCES

ASTM C618 / AASHTO M295 Testing of J.E. Corette Fly Ash

Sample Type: Composite **Report Date:** 4/10/2014

Sample Date: 3/5/14 **MTRF ID:** 449CO

Sample ID: CO-003-14

Chemical Analysis			ASTM / AASHTO Limits Class F	Class C	ASTM Test Method
Silicon Dioxide (SiO2)	28.58	%			
Aluminum Oxide (Al2O3)	17.46	%			
Iron Oxide (Fe2O3)	4.97	%			
Sum of Constituents	51.01	%	70.0% min	50.0% min	D4326
Sulfur Trioxide (SO3)	3.65	%	5.0% max	5.0% max	D4326
Calcium Oxide (CaO)	30.38	%			D4326
Moisture	0.12	%	3.0% max	3.0% max	C311
Loss on Ignition	1.55	%	6.0% max 5.0% max	6.0% max 5.0% max	C311 AASHTO M295
Available Alkalies, as Na2O	1.79	%	not required		C311
When required by purchaser			1.5% max	1.5% max	AASHTO M295
Physical Analysis					
Fineness, % retained on #325	14.38	%	34% max	34% max	C311, C430
Strength Activity Index - 7 or 28 day requirement					C311, C109
7 day, % of control	109	%	75% min	75% min	
28 day, % of control	115	%	75% min	75% min	
Water Requirement, % control	95	%	105% max	105% max	
Autoclave Soundness	0.12	%	0.8% max	0.8% max	C311, C151
Density	2.84				C604

Headwaters Resources certifies that pursuant to current ASTM C618 protocol for testing, the test data listed herein was generated by applicable ASTM methods and meets the requirements of ASTM C618.

Doug Rhodes, CET
Facility Manager

AAP SM
AASHTO R18

Materials Testing & Research Facility
2650 Old State Highway 113
Taylorsville, Georgia 30178
P: 770.684.0102
F: 770.684.5114

United Materials

PO Box 1690
Great Falls, MT 59403-1690

Product

Fine Concrete Aggregate (Washed Sand)

Tested By	JDD	TIME 9; 30 am	
Sampled By	MARVIN D		
Date Sampled	7/17/2014	Job #	NOT WASH
Date Tested	7/17/2014	Sampled From	WASH PLANT
Date Finished	7/17/2014	Used For	CONC. SAND
Test #	B		

Wet Weight of Sample (g)	1575.60	
Dry Weight of Sample (g)	1346.60	
Dry Wt. After Wash (g)	1346.60	
Percent Moisture	17.01%	
Loss by Wash (Wt. and Pctg.)	0.00	0.00%

Sieve	Wt Retained Cumm.	Indiv. Weight	% Retained Cumm.	% Passing	Specification	Tolerance
3/8"	0.00	0.00	0.00%	100%	100%	
#4	7.40	7.40	0.55%	99%	90% - 100%	
#8	298.50	291.10	22.17%	78%	80% - 100%	
#16	515.10	216.60	38.25%	62%	50% - 85%	
#30	651.10	136.00	48.35%	52%	25% - 60%	
#50	936.70	285.60	69.56%	30%	5% - 30%	
#100	1292.00	355.30	95.95%	4%	0% - 10%	
#200	1342.00	50.00	99.66%	0%	0% - 3%	
Pan Wt.		-1342.00	Fineness Module	2.75	2.5 - 3	
			Test Validation	100.0%	<0.3% Required	

% Fracture 1 Face

% Fracture 2 Face

% Moisture 17.01%

United Materials

PO Box 1690
Great Falls, MT 59403-1690

Product
3/4" Washed Rock

Tested By	JDD	TIME 5:45 AM	
Sampled By	JOE H		
Date Sampled	7/23/2014	Job #	
Date Tested	7/23/2014	Sampled From	WASH PLANT
Date Finished	7/23/2014	Used For	CONC. AGG.
Test #	A		
Wet Weight of Sample (g)	1899.00		
Dry Weight of Sample (g)	1859.50		
Dry Wt. After Wash (g)	1859.50		
Percent Moisture	2.12%		
Loss by Wash (Wt. and Pctg.)	0.00	0.00%	

Sieve	Wt Retained Cumm.	Indiv. Weight	% Retained Cumm.	% Passing	Specification	Tolerance
1"	0.00	0.00	0.00%	100%	100%	
3/4"	10.00	10.00	0.54%	99%	90% - 100%	
1/2"	677.00	667.00	36.41%	64%		
3/8"	1179.00	502.00	63.40%	37%	25% - 55%	
#4	1797.70	618.70	96.68%	3%	0% - 10%	
#8	1858.00	60.30	99.92%	0%	0% - 5%	
Pan Wt.	1859.30	1.30				

Test Validation 0.0% <0.3% Required

% Fracture 1 Face
% Fracture 2 Face
% Moisture 2.12%

BASF

The Chemical Company

August 12, 2014

Great Falls Redi-Mix
P.O. Box 1989
Great Falls, Montana 59403

Attention: Russell Roberts
Project: Sand Coulee Water System
Project location: Sand Coulee, MT

Certificate of Conformance
MasterAir® AE 200 Admixture (formerly Micro Air)
BASF Corporation* Air-Entraining Admixture for Concrete

*(successor in interest to BASF Construction Chemicals, LLC , which is successor by merger to BASF Admixtures, Inc., formerly known as Degussa Admixtures, Inc., formerly known as Master Builders, Inc.)

I, Richard Hubbard, Sr. Technical Marketing Specialist for BASF Corporation, Cleveland, Ohio,certify:

That MasterAir AE 200 admixture is a BASF Corporation Air-Entraining Admixture for concrete; and

That MasterAir AE 200 admixture and Micro Air admixture are the same product having identical composition, differing only in designation; and

That no calcium chloride or chloride based ingredient is used in the manufacture of MasterAir AE 200 admixture; and

That MasterAir AE 200 admixture, based on the chlorides originating from all the ingredients used in its manufacture, contributes less than 0.0001 percent (1.0 ppm) chloride ions by weight of the cement when used at the rate of 65 mL per 100 kg (1 fluid ounce per 100 pounds) of cement; and

That MasterAir AE 200 admixture meets the requirements of ASTM C260 and AASHTO M154, the Standard Specification for Air-Entraining Admixtures for Concrete, as well as the requirements for air-entraining admixtures as specified in Corps of Engineers CRD-C 13.

Richard Hubbard III

Richard Hubbard
Sr. Technical Marketing Specialist, BASF Corporation

BASF Corporation
23700 Chagrin Boulvard
Cleveland, OH 44122
216 839-7500 ph
www.masterbuilders.com

Master Builders
Admixture Solutions

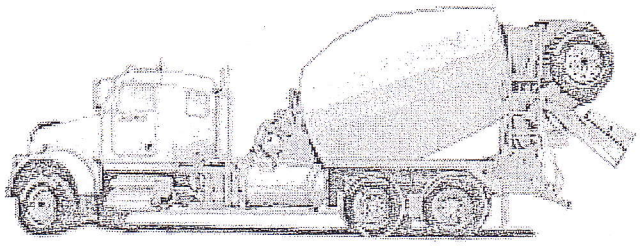

GREAT FALLS REDI - MIX, Inc.
for all your concrete needs
Phone: 761-5400 P.O. BOX 1989 GREAT FALLS, MT 59403

CERTIFIED WATER

January 1, 2014

The water source for all concrete manufactured by Great Falls Redi - Mix is the City of Great Falls water system and is of a potable nature and free of injurious amounts of mineral and organic substances, especially dissolved sulfates

Sincerely Yours,

Jerry Gates
General Manager

BASF

The Chemical Company

August 12, 2014

Great Falls Redi-Mix
P.O. Box 1989
Great Falls, Montana 59403

Attention: Russell Roberts
Project: Sand Coulee Water System
Project location: Sand Coulee, MT

Certificate of Conformance
MasterPolyheed® 997 Admixture (formerly PolyHeed 997)
BASF Corporation* Admixture for Concrete

*(successor in interest to BASF Construction Chemicals, LLC , which is successor by merger to BASF Admixtures, Inc., formerly known as Degussa Admixtures, Inc., formerly known as Master Builders, Inc.)

I, Richard Hubbard, Sr. Technical Marketing Specialist for BASF Corporation, Cleveland, Ohio,certify:

That MasterPolyheed 997 admixture is a BASF Corporation Mid-Range Water-Reducing Admixture for concrete; and

That MasterPolyheed 997 and PolyHeed 997 admixture are the same product having identical composition, differing only in designation; and

That no calcium chloride or chloride based ingredient is used in the manufacture of MasterPolyheed 997 admixture; and

That MasterPolyheed 997 admixture, based on the chlorides originating from all the ingredients used in its manufacture, contributes less than 0.00012 percent (1.2 ppm) chloride ions by weight of the cement when used at the rate of 65 mL per 100 kg (1 fluid ounce per 100 pounds) of cement; and

That MasterPolyheed 997 admixture meets the requirements for a Type A, Water-Reducing Admixture, and Type F, Water-Reducing, High Range Admixture specified in ASTM C494/C494M, the Standard Specification for Chemical Admixtures for Concrete, as well as the requirements of Type A and Type F admixtures as specified in Corps of Engineers' CRD-C 87 and AASHTO M194.

Richard Hubbard III

Richard Hubbard
Sr. Technical Marketing Specialist, BASF Corporation

BASF Corporation
23700 Chagrin Boulvard
Cleveland, OH 44122
216 839-7500 ph
www.masterbuilders.com

Master Builders
Admixture Solutions

BASF

The Chemical Company

August 12, 2014

Great Falls Redi-Mix
P.O. Box 1989
Great Falls, Montana 59403

Attention: Russell Roberts
Project: Sand Coulee Water System
Project location: Sand Coulee, MT

Certificate of Conformance
MasterSet® DELVO Admixture (formerly DELVO Stabilizer)
BASF Corporation* Admixture for Concrete

*(successor in interest to BASF Construction Chemicals, LLC , which is successor by merger to BASF Admixtures, Inc., formerly known as Degussa Admixtures, Inc., formerly known as Master Builders, Inc.)

I, Richard Hubbard, Sr. Technical Marketing Specialist for BASF Corporation, Cleveland, Ohio,certify:

That MasterSet DELVO admixture is a BASF Corporation Hydration Controlling Admixture for concrete; and

That MasterSet DELVO admixture and DELVO Stabilizer admixture are the same product having identical composition, differing only in designation; and

That no calcium chloride or chloride based ingredient is used in the manufacture of MasterSet DELVO admixture and

That MasterSet DELVO admixture, based on the chlorides originating from all the ingredients used in its manufacture, contributes less than 0.00014 percent (1.4 ppm) chloride ions by weight of the cement when used at the rate of 65 mL per 100 kg (1 fluid ounce per 100 pounds) of cement; and

That MasterSet DELVO admixture meets the requirements for a Type B, Retarding and Type D, Water-Reducing and Retarding Admixture specified in ASTM C494/C494M, the Standard Specification for Chemical Admixtures for Concrete, as well as the requirements for Tyep B and Type D admixtures as specified in Corps of Engineers' CRD-C 87 and AASHTO M194.

Richard Hubbard III

Richard Hubbard
Sr. Technical Marketing Specialist, BASF Corporation

BASF Corporation
23700 Chagrin Boulvard
Cleveland, OH 44122
216 839-7500 ph
www.masterbuilders.com

Master Builders
Admixture Solutions

BASF

The Chemical Company

August 12, 2014

Great Falls Redi-Mix
P.O. Box 1989
Great Falls, Montana 59403

Attention: Russell Roberts
Project: Sand Coulee Water System
Project location: Sand Coulee, MT

Certificate of Conformance
MasterGlenium® 3030 Admixture (formerly Glenium 3030 NS)
BASF Corporation* Admixture for Concrete

*(successor in interest to BASF Construction Chemicals, LLC , which is successor by merger to BASF Admixtures, Inc., formerly known as Degussa Admixtures, Inc., formerly known as Master Builders, Inc.)

I, Richard Hubbard, Sr. Technical Marketing Specialist for BASF Corporation, Cleveland, Ohio,certify:

That MasterGlenium 3030 admixture meets the requirements for a Type A, Water-Reducing and Type F, Water-Reducing, High Range Admixture specified in ASTM C 494/C 494M, Standard Specifications for Chemical Admixtures for Concrete, as well as the requirements for Type A and Type F admixtures as specified in Corps of Engineers' CRD-C 87 and AASHTO M194; and

That MasterGlenium 3030 admixture meets the requirements for a Type 1, Plasticizing Admixture specified in ASTM C 1017, the Standard Specification for Chemical Admixtures for Use in Producing Flowing Concrete.

Richard Hubbard III

Richard Hubbard
Sr. Technical Marketing Specialist, BASF Corporation

BASF Corporation
23700 Chagrin Boulvard
Cleveland, OH 44122
216 839-7500 ph
www.masterbuilders.com

Master Builders
Admixture Solutions

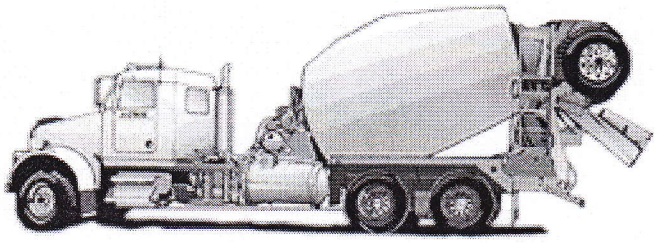

GREAT FALLS REDI - MIX, Inc.
for all your concrete needs
Phone: 761-5400 P.O. BOX 1989 GREAT FALLS, MT 59403

Boland Construction

PROJECT: Sand Coulee Water System

TYPE V
3500# CONCRETE

We are submitting the following mix design for approval on the referenced project:

CEMENT	426 POUNDS PER CUBIC YARD
FLY ASH	94 POUNDS PER CUBIC YARD
SAND	1351 POUNDS PER CUBIC YARD
3/4"	1800 POUNDS PER CUBIC YARD
AEA	1.35 OZ PER 100 LB CEMENTITIOUS MATERIAL
WATER	28.5 GALLONS PER CUBIC YARD MIX
POLY 997	4.0 OZ PER 100 LB CEMENTITIOUS MATERIAL
DELVO STABILIZER	AS NEEDED FOR TRANSPORT
GELINUM 3030	PLASTISIZER AS NEEDED.

Note: GFRM requests copies of concrete tests for this project as soon as they are available, to assure we are supplying you with the best product possible.

Holcim

Material Certification Report

Material: Portland Cement
Type: V

Test Period: 01-Mar-2014
To: 31-Mar-2014

Certification

This Holcim cement meets the specifications of ASTM C150 for Type V cement.

General Information

Supplier: Holcim (US) Inc.
Address: 4070 Trident Road
Three Forks, MT 59752
Telephone: 406-285-4964
Date Issued: 03-Apr-2014

Source Location: Trident Plant
4070 Trident Road
Three Forks, MT 59752
Contact: Gail B Amicucci

The following information is based on average test data during the test period.
The data is typical of cement shipped by Holcim; individual shipments may vary.

Tests Data on ASTM Standard Requirements

Chemical

Item	Limit[A]	Result
SiO_2 (%)	-	20.6
Al_2O_3 (%)	-	3.9
Fe_2O_3 (%)	-	3.1
CaO (%)	-	64.2
MgO (%)	6.0 max	2.8
SO_3 (%)	2.3 max[B]	2.9
Loss on Ignition (%)	3.0 max	2.6
Insoluble Residue (%)	0.75 max	0.43
CO_2 (%)	-	1.7
Limestone (%)	5.0 max	4.0
$CaCO_3$ in Limestone (%)	70 min	94
Inorganic Processing Addition (%)	5.0 max	2.8
Potential Phase Compositions[C]:		
C_3S (%)	-	58
C_2S (%)	-	14
C_3A (%)	5 max	5
C_4AF (%)	-	9

Physical

Item	Limit[A]	Result
Air Content (%)	12 max	7
Blaine Fineness (m^2/kg)	260 min	416
Autoclave Expansion (%) (C151)	0.80 max	0.01
Compressive Strength MPa (psi):		
3 days	8.0 (1160) min	28.8 (4180)
7 days	15.0 (2180) min	37.2 (5400)
Initial Vicat (minutes)	45-375	156
Mortar Bar Expansion (%) (C1038)	-	0.011

Tests Data on ASTM Optional Requirements

Chemical

Item	Limit[A]	Result
Equivalent Alkalies (%)	0.60 max	0.41

Physical

Item	Limit[A]	Result

Notes

[A] Dashes in the limit / result columns mean Not Applicable.

[B] It is permissible to exceed the specification limit provided that ASTM C1038 Mortar Bar Expansion does not exceed 0.020 % at 14 days.

[C] Adjusted per Annex A1.6 of ASTM C150 and AASHTO M85.

[D] Test result represents most recent value and is provided for information only. Analysis of Heat of Hydration has been carried out by CTLGroup, Skokie, IL. This data may have been reported on previous mill certificates.

Additional Data

Inorganic Processing Addition Data

Item	Result[A]
Type	Kiln Dust
Amount (%)	3
SiO_2 (%)	16
Al_2O_3 (%)	4
Fe_2O3 (%)	2
CaO (%)	47
SO_3 (%)	4

Base Cement Phase Composition

Item	Result
C_3S (%)	62
C_2S (%)	15
C_3A (%)	5
C_4AF (%)	10

HEADWATERS RESOURCES

ASTM C618 / AASHTO M295 Testing of J.E. Corette Fly Ash

Sample Type: Composite **Report Date:** 4/10/2014

Sample Date: 3/5/14 **MTRF ID:** 449CO

Sample ID: CO-003-14

Chemical Analysis			ASTM / AASHTO Limits Class F	Class C	ASTM Test Method
Silicon Dioxide (SiO2)	28.58	%			
Aluminum Oxide (Al2O3)	17.46	%			
Iron Oxide (Fe2O3)	4.97	%			
Sum of Constituents	51.01	%	70.0% min	50.0% min	D4326
Sulfur Trioxide (SO3)	3.65	%	5.0% max	5.0% max	D4326
Calcium Oxide (CaO)	30.38	%			D4326
Moisture	0.12	%	3.0% max	3.0% max	C311
Loss on Ignition	1.55	%	6.0% max 5.0% max	6.0% max 5.0% max	C311 AASHTO M295
Available Alkalies, as Na2O	1.79	%	not required		C311
When required by purchaser			1.5% max	1.5% max	AASHTO M295
Physical Analysis					
Fineness, % retained on #325	14.38	%	34% max	34% max	C311, C430
Strength Activity Index - 7 or 28 day requirement					C311, C109
7 day, % of control	109	%	75% min	75% min	
28 day, % of control	115	%	75% min	75% min	
Water Requirement, % control	95	%	105% max	105% max	
Autoclave Soundness	0.12	%	0.8% max	0.8% max	C311, C151
Density	2.84				C604

Headwaters Resources certifies that pursuant to current ASTM C618 protocol for testing, the test data listed herein was generated by applicable ASTM methods and meets the requirements of ASTM C618.

Doug Rhodes, CET
Facility Manager

AAR SM
AASHTO R18

Materials Testing & Research Facility
2650 Old State Highway 113
Taylorsville, Georgia 30178
P: 770.684.0102
F: 770.684.5114

United Materials

PO Box 1690
Great Falls, MT 59403-1690

Product

Fine Concrete Aggregate (Washed Sand)

Tested By	JDD	TIME 9; 30 am	
Sampled By	MARVIN D		
Date Sampled	7/17/2014	Job #	NOT WASH
Date Tested	7/17/2014	Sampled From:	WASH PLANT
Date Finished	7/17/2014	Used For	CONC. SAND
Test #	B		

Wet Weight of Sample (g)	1575.60	
Dry Weight of Sample (g)	1346.60	
Dry Wt. After Wash (g)	1346.60	
Percent Moisture	17.01%	
Loss by Wash (Wt. and Pctg.)	0.00	0.00%

Sieve	Wt Retained Cumm.	Indiv. Weight	% Retained Cumm.	% Passing	Specification	Tolerance
3/8"	0.00	0.00	0.00%	100%	100%	
#4	7.40	7.40	0.55%	99%	90% - 100%	
#8	298.50	291.10	22.17%	78%	60% - 100%	
#16	515.10	216.60	38.25%	62%	50% - 85%	
#30	651.10	136.00	48.35%	52%	25% - 60%	
#50	936.70	285.60	69.56%	30%	5% - 30%	
#100	1292.00	355.30	95.95%	4%	0% - 10%	
#200	1342.00	50.00	99.66%	0%	0% - 3%	
Pan Wt.		-1342.00	Fineness Module	2.75	2.5 - 3	
			Test Validation	100.0%	<0.3% Required	

% Fracture 1 Face	
% Fracture 2 Face	
% Moisture	17.01%

United Materials

PO Box 1690
Great Falls, MT 59403-1690

Product
3/4" Washed Rock

Tested By	JDD	TIME 5:45 AM
Sampled By	JOE H	
Date Sampled	7/23/2014	
Date Tested	7/23/2014	
Date Finished	7/23/2014	
Test #	A	

Job #
Sampled From WASH PLANT
Used For CONC. AGG.

Wet Weight of Sample (g)	1899.00	
Dry Weight of Sample (g)	1859.50	
Dry Wt. After Wash (g)	1859.50	
Percent Moisture	2.12%	
Loss by Wash (Wt. and Pctg.)	0.00	0.00%

Sieve	Wt Retained Cumm.	Indiv. Weight	% Retained Cumm.	% Passing	Specification	Tolerance
1"	0.00	0.00	0.00%	100%	100%	
3/4"	10.00	10.00	0.54%	99%	90% - 100%	
1/2"	677.00	667.00	36.41%	64%		
3/8"	1179.00	502.00	63.40%	37%	25% - 55%	
#4	1797.70	618.70	96.68%	3%	0% - 10%	
#8	1858.00	60.30	99.92%	0%	0% - 5%	
Pan Wt.	1859.30	1.30				

Test Validation 0.0% ±0.3% Required

% Fracture 1 Face
% Fracture 2 Face
% Moisture 2.12%

BASF

The Chemical Company

August 12, 2014

Great Falls Redi-Mix
P.O. Box 1989
Great Falls, Montana 59403

Attention: Russell Roberts
Project: Sand Coulee Water System
Project location: Sand Coulee, MT

Certificate of Conformance
MasterAir® AE 200 Admixture (formerly Micro Air)
BASF Corporation* Air-Entraining Admixture for Concrete

*(successor in interest to BASF Construction Chemicals, LLC , which is successor by merger to BASF Admixtures, Inc., formerly known as Degussa Admixtures, Inc., formerly known as Master Builders, Inc.)

I, Richard Hubbard, Sr. Technical Marketing Specialist for BASF Corporation, Cleveland, Ohio,certify:

That MasterAir AE 200 admixture is a BASF Corporation Air-Entraining Admixture for concrete; and

That MasterAir AE 200 admixture and Micro Air admixture are the same product having identical composition, differing only in designation; and

That no calcium chloride or chloride based ingredient is used in the manufacture of MasterAir AE 200 admixture; and

That MasterAir AE 200 admixture, based on the chlorides originating from all the ingredients used in its manufacture, contributes less than 0.0001 percent (1.0 ppm) chloride ions by weight of the cement when used at the rate of 65 mL per 100 kg (1 fluid ounce per 100 pounds) of cement; and

That MasterAir AE 200 admixture meets the requirements of ASTM C260 and AASHTO M154, the Standard Specification for Air-Entraining Admixtures for Concrete, as well as the requirements for air-entraining admixtures as specified in Corps of Engineers CRD-C 13.

Richard Hubbard III

Richard Hubbard
Sr. Technical Marketing Specialist, BASF Corporation

BASF Corporation
23700 Chagrin Boulvard
Cleveland, OH 44122
216 839-7500 ph
www.masterbuilders.com

Master Builders
Admixture Solutions

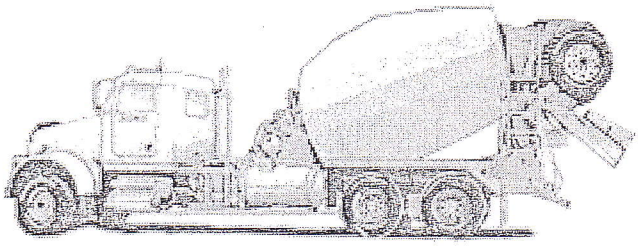

GREAT FALLS REDI - MIX, Inc.
for all your concrete needs
Phone: 761-5400 P.O. BOX 1989 GREAT FALLS, MT 59403

CERTIFIED WATER

January 1, 2014

The water source for all concrete manufactured by Great Falls Redi - Mix is the City of Great Falls water system and is of a potable nature and free of injurious amounts of mineral and organic substances, especially dissolved sulfates

Sincerely Yours,

Jerry Gates
General Manager

BASF

The Chemical Company

August 12, 2014

Great Falls Redi-Mix
P.O. Box 1989
Great Falls, Montana 59403

Attention: Russell Roberts
Project: Sand Coulee Water System
Project location: Sand Coulee, MT

Certificate of Conformance
MasterPolyheed® 997 Admixture (formerly PolyHeed 997)
BASF Corporation* Admixture for Concrete

*(successor in interest to BASF Construction Chemicals, LLC , which is successor by merger to BASF Admixtures, Inc., formerly known as Degussa Admixtures, Inc., formerly known as Master Builders, Inc.)

I, Richard Hubbard, Sr. Technical Marketing Specialist for BASF Corporation, Cleveland, Ohio,certify:

That MasterPolyheed 997 admixture is a BASF Corporation Mid-Range Water-Reducing Admixture for concrete; and

That MasterPolyheed 997 and PolyHeed 997 admixture are the same product having identical composition, differing only in designation; and

That no calcium chloride or chloride based ingredient is used in the manufacture of MasterPolyheed 997 admixture; and

That MasterPolyheed 997 admixture, based on the chlorides originating from all the ingredients used in its manufacture, contributes less than 0.00012 percent (1.2 ppm) chloride ions by weight of the cement when used at the rate of 65 mL per 100 kg (1 fluid ounce per 100 pounds) of cement; and

That MasterPolyheed 997 admixture meets the requirements for a Type A, Water-Reducing Admixture, and Type F, Water-Reducing, High Range Admixture specified in ASTM C494/C494M, the Standard Specification for Chemical Admixtures for Concrete, as well as the requirements of Type A and Type F admixtures as specified in Corps of Engineers' CRD-C 87 and AASHTO M194.

Richard Hubbard III

Richard Hubbard
Sr. Technical Marketing Specialist, BASF Corporation

BASF Corporation
23700 Chagrin Boulvard
Cleveland, OH 44122
216 839-7500 ph
www.masterbuilders.com

Master Builders
Admixture Solutions

BASF

The Chemical Company

August 12, 2014

Great Falls Redi-Mix
P.O. Box 1989
Great Falls, Montana 59403

Attention: Russell Roberts
Project: Sand Coulee Water System
Project location: Sand Coulee, MT

Certificate of Conformance
MasterSet® DELVO Admixture (formerly DELVO Stabilizer)
BASF Corporation* Admixture for Concrete

*(successor in interest to BASF Construction Chemicals, LLC , which is successor by merger to BASF Admixtures, Inc., formerly known as Degussa Admixtures, Inc., formerly known as Master Builders, Inc.)

I, Richard Hubbard, Sr. Technical Marketing Specialist for BASF Corporation, Cleveland, Ohio,certify:

That MasterSet DELVO admixture is a BASF Corporation Hydration Controlling Admixture for concrete; and

That MasterSet DELVO admixture and DELVO Stabilizer admixture are the same product having identical composition, differing only in designation; and

That no calcium chloride or chloride based ingredient is used in the manufacture of MasterSet DELVO admixture and

That MasterSet DELVO admixture, based on the chlorides originating from all the ingredients used in its manufacture, contributes less than 0.00014 percent (1.4 ppm) chloride ions by weight of the cement when used at the rate of 65 mL per 100 kg (1 fluid ounce per 100 pounds) of cement; and

That MasterSet DELVO admixture meets the requirements for a Type B, Retarding and Type D, Water-Reducing and Retarding Admixture specified in ASTM C494/C494M, the Standard Specification for Chemical Admixtures for Concrete, as well as the requirements for Tyep B and Type D admixtures as specified in Corps of Engineers' CRD-C 87 and AASHTO M194.

Richard Hubbard III

Richard Hubbard
Sr. Technical Marketing Specialist, BASF Corporation

BASF Corporation
23700 Chagrin Boulvard
Cleveland, OH 44122
216 839-7500 ph
www.masterbuilders.com

Master Builders
Admixture Solutions

BASF

The Chemical Company

August 12, 2014

Great Falls Redi-Mix
P.O. Box 1989
Great Falls, Montana 59403

Attention: Russell Roberts
Project: Sand Coulee Water System
Project location: Sand Coulee, MT

Certificate of Conformance
MasterGlenium® 3030 Admixture (formerly Glenium 3030 NS)
BASF Corporation* Admixture for Concrete

*(successor in interest to BASF Construction Chemicals, LLC , which is successor by merger to BASF Admixtures, Inc., formerly known as Degussa Admixtures, Inc., formerly known as Master Builders, Inc.)

I, Richard Hubbard, Sr. Technical Marketing Specialist for BASF Corporation, Cleveland, Ohio,certify:

That MasterGlenium 3030 admixture meets the requirements for a Type A, Water-Reducing and Type F, Water-Reducing, High Range Admixture specified in ASTM C 494/C 494M, Standard Specifications for Chemical Admixtures for Concrete, as well as the requirements for Type A and Type F admixtures as specified in Corps of Engineers' CRD-C 87 and AASHTO M194; and

That MasterGlenium 3030 admixture meets the requirements for a Type 1, Plasticizing Admixture specified in ASTM C 1017, the Standard Specification for Chemical Admixtures for Use in Producing Flowing Concrete.

Richard Hubbard III

Richard Hubbard
Sr. Technical Marketing Specialist, BASF Corporation

BASF Corporation
23700 Chagrin Boulvard
Cleveland, OH 44122
216 839-7500 ph
www.masterbuilders.com

Master Builders
Admixture Solutions

CONCRETE COMPRESSIVE STRENGTH TEST REPORT

Report Number: C4921012.0019
Service Date: 12/07/12
Report Date: 02/01/13 Revision 3 - 56-day results
Task:

1392 13th Ave. SW
Great Falls, MT 59404
406-453-5400

Client

Great Falls Redi-Mix, Inc.
Attn: Jerry Gates
P.O. Box 1989
Great Falls, MT 59403

Project

Misc - Great Falls RM
Materials Testing
Great Falls, MT

Project Number: C4921012

Material Information

Specified Strength: 3,500 psi @ 28 days

Mix ID: UKD 3500
Supplier: Great Falls R.M.
Batch Time: 0820 **Plant:**
Truck No.: 74 **Ticket No.:** 086666

Sample Information

Sample Date: 12/07/12 **Sample Time:**
Sampled By: Client
Weather Conditions:
Accumulative Yards: **Batch Size (cy):** 8
Placement Method:
Water Added Before (gal):
Water Added After (gal):
Sample Location: Test Mix 3500 psi
Placement Location:

Field Test Data

Test	Result	Specification
Slump (in):	3	
Air Content (%):	6.0	
Concrete Temp. (F):	62	
Ambient Temp. (F):	35	
Plastic Unit Wt. (pcf):		
Yield (Cu. Yds.):		

Laboratory Test Data

Set No.	Specimen ID	Avg Diam. (in)	Area (sq in)	Date Received	Date Tested	Age at Test (days)	Maximum Load (lbs)	Compressive Strength (psi)	Fracture Type
18958	1	5.98	28.09	12/10/12	12/14/12	7	86,260	3,070	
18958	2	5.98	28.09	12/10/12	12/21/12	14	103,580	3,680	2
18958	3	5.96	27.9	12/10/12	01/04/13	28	109,940	3,940	6
18958	4	5.96	27.9	12/10/12	02/01/13	56	112,920	4,040	

Comments: Compressive strength of 56 day cylinders complies with the specified strength. Not tested for plastic unit weight.

Services: Obtain samples of fresh concrete at the placement location, perform required field tests and cast compressive strength samples. Standard test methods include ASTM C172, C1064, C143, C231, C617 or C1231, and C39.

Terracon Rep.: Client
Reported To:
Contractor:
Report Distribution:
(1) Great Falls Redi-Mix, Inc. , jerry@gfredimix.com
(1) Great Falls Redi-Mix, Inc. , russ@gfredimix.com

Reviewed By: Munski, Kenneth
Senior Materials Engineer

Test Methods:

The tests were performed in general accordance with applicable ASTM, AASHTO, or DOT test methods. This report is exclusively for the use of the client indicated above and shall not be reproduced except in full without the written consent of our company. Test results transmitted herein are only applicable to the actual samples tested at the location(s) referenced and are not necessarily indicative of the properties of other apparently similar or identical materials.

CURRIES

ASSA ABLOY

HOLLOW METAL DOORS AND FRAMES

DISTRIBUTED BY:

dhu

DOORS & HARDWARE UNLIMITED, INC.
4125 North Star Blvd.
Great Falls, Montana 59405
Phone (406) 761-4465 Fax (406) 761-4638

FRAME PROFILES

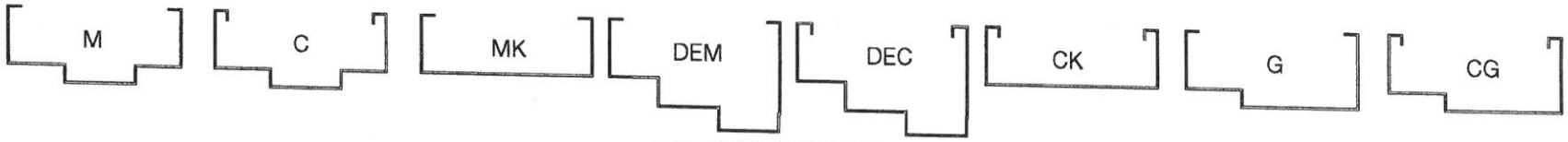

DOOR HANDING CHART

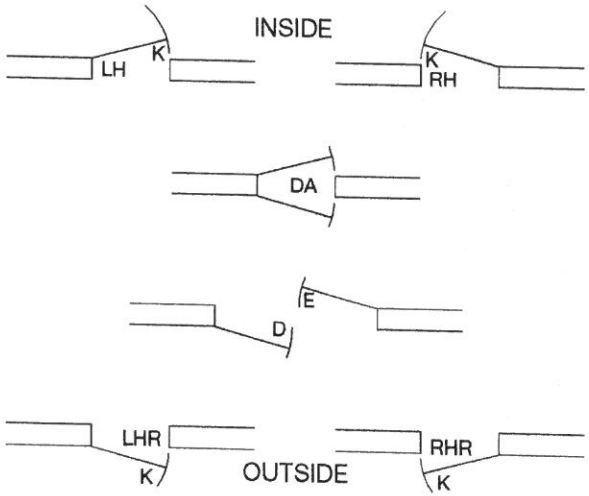

RECORD OF SUBMITTALS	
SUBMITTED	RETURNED
1ST	
2ND	
3RD	
4TH	
RECEIVED APPROVED DRAWINGS	
RECEIVED APPROVED HARDWARE	
DRAWN BY:	

JOB NO.	
PROJECT	SAND COULEE WATER IMPROVEMENTS
LOCATION	SAND COULEE, MT
ARCHITECT	
CONTRACTOR	BOLAND
FINISH HARDWARE BY	DOORS & HARDWARE
SHEET NO.	1 OF 5

707 SERIES

Specifications

Doors shall be 707 type as manufactured by CURRIES, Mason City, Iowa. Doors are to be manufactured of the finest quality 14, 16, 18, 20 (specify gauge) cold rolled stretcher leveled steel or galvannealed steel (specify). All doors shall be full flush construction and either 1-3/4" (44) or 1-3/8" (35) thick. Doors shall be reinforced, stiffened, insulated, and sound deadened with a solid polystyrene foam board permanently bonded to the inside of each face skin. The lock and hinge edge of each door shall be welded with a centered hairline seam the full height of the door (707S) OR both the lock and hinge edge of each door shall be welded, filled and ground smooth (seamless) the full height of the door (707N) OR the lock and hinge edge of each door may have the center seam continuously wire welded the full height of the door, filled and ground smooth (707T). The lock edge shall be reinforced full height by a 14 gauge continuous one piece channel x extruded templating. The hinge edge shall be reinforced full height by a 14 gauge continuous one piece channel, formed and tapped for hinges. Top and bottom of the door shall be closed with 16 gauge channels. Doors shall have beveled 1/8" (3) in 2" (51) lock edge and square hinge edge. Doors shall be thoroughly cleaned and receive an iron phosphate treatment prior to receiving one coat of prime paint. Minimum hardware reinforcement shall consist of the following: Closers - Overhead Holders - Rim Panics, 14 gauge channels; Butts and Locks as previously specified herein. Floor Closers and Pivots - 7 gauge x template requirements.

Core

Polystyrene—ASTM C578 Type 1, 1.0 lb. (.45) nominal density expanded polystyrene, R Value = 6.4 (1-3/4" door)

Polyisocyanurate—ASTM C591, 1.75 lb. minimum (.45) density rigid cellular isocyanurate foam, R Value = 10 (1-3/4" door)

Thermal

ASTM C236 and SDI 113 Test Procedures
707 door and frame assembly—0.24 U Factor

Fire Rating

UL 10B, ANSI/NFPA 252 Test Procedures, UL 10C, UBC 7.2-97
607 & 707 doors—3 hr., 1-1/2 hr., 3/4 hr., 20 minute hourly ratings

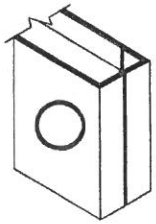

707S
Exposed hairline seam on center of door edge

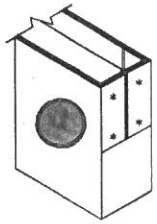

707N
Seam welded, filled and ground smooth.

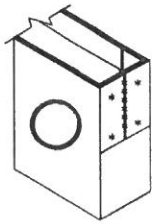

707T
Seam welded, full length and ground smooth.

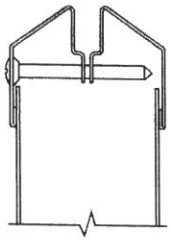

STANDARD GLASS MOLDING

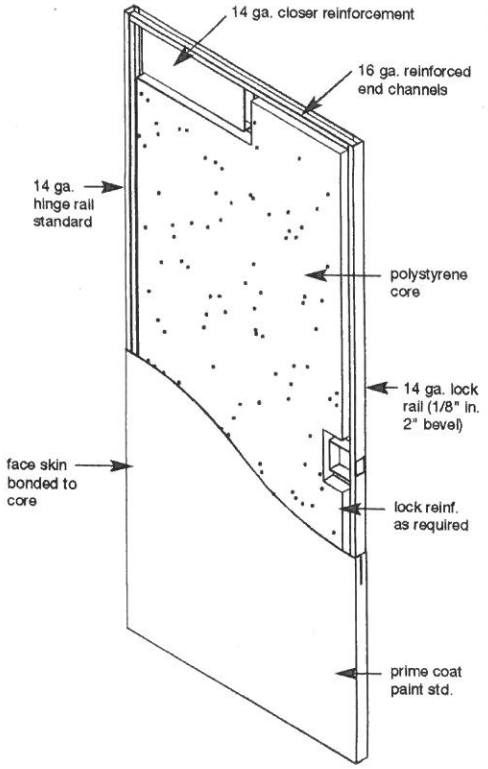

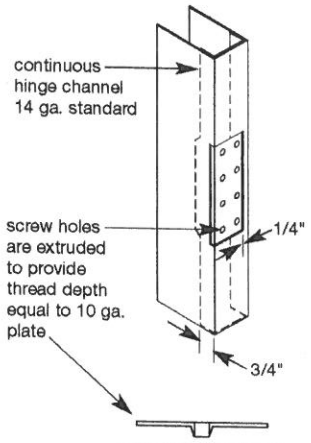

707 SERIES HINGE CHANNEL REINFORCING

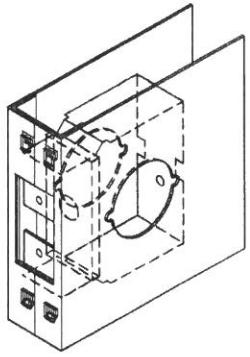

GOVT. 161 CYLINDRICAL LOCK REINFORCEMENT

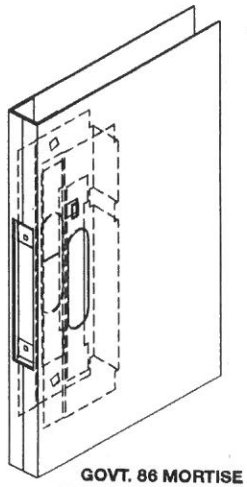

GOVT. 86 MORTISE LOCK REINFORCEMENT

- ○ GALVANIZED
- ● EXTERIOR
- ○ INTERIOR

- ○ 1 3/4" 14 GA. STEEL SKINS
- ● 1 3/4" 16 GA. STEEL SKINS
- ○ 1 3/4" 18 GA. STEEL SKINS
- ○ 1 3/4" 20 GA. STEEL SKINS
- ○ 1 3/8" 18 GA. STEEL SKINS
- ○ 1 3/8" 20 GA. STEEL SKINS

JOB NO.	PROJECT	LOCATION	SHEET NO. 1 OF 5

Masonry/Flush Frames "M" Type

M Series/Jamb Depths
3" (76) to 14" (356), 1/8" (3) Increments

Specifications
Frames shall be as manufactured by Curries Company, Mason City, Iowa. Frames are to be fabricated of either cold-rolled steel or galvannealed steel (as specified) of either 18, 16, 14, or 12 gauge. All joints are to be die-mitered with integral tabs for reinforcement and interlocking of the jambs to the head. All 12 gauge frames are saw miter or saw butt end corner construction. Frames shall be knock-down or set-up and welded. Frames shall be thoroughly degreased and cleaned of all imperfections before painting. All frames shall receive a factory baked-on coat of rust inhibitive primer. Frames are to be mortised, reinforced, and drilled and tapped for all mortise finish hardware. Frames are to be reinforced only for surface mounted hardware, with drilling and tapping to be done in the field by others. Metal plaster guards are to be provided for all mortised cutouts. Minimum requirements for hardware reinforcements are to be as follows: hinge reinforcing—7 gauge x 1-5/8" (41) x 10" (254), lock strike reinforcing—14 gauge conforming to template requirements, closer reinforcing—12 gauge.

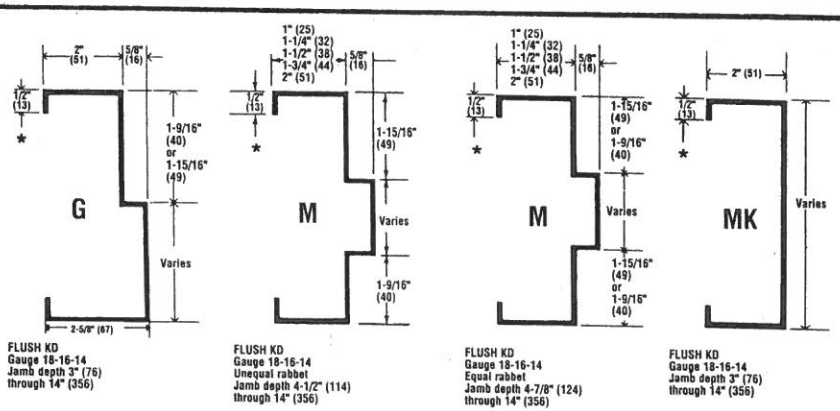

*5-3/4" (146) jamb-depth frames have 7/16" (11) back bend.

- ○ GALVANIZED
- ● EXTERIOR
- ○ INTERIOR

- ○ 1 3/4" 12 GA. STEEL
- ○ 1 3/4" 14 GA. STEEL
- ○ 1 3/4" 16 GA. STEEL
- ○ 1 3/4" 18 GA. STEEL
- ○ 1 3/8" 16 GA. STEEL
- ○ 1 3/8" 18 GA. STEEL

☐ WALL ANCHORS PER JAMB

○ FLUSH KD MITER CORNER JOINT

● SEAM WELD

○ FULL WELD

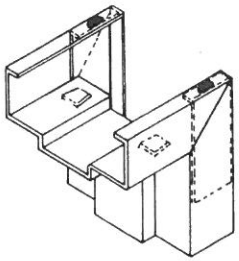

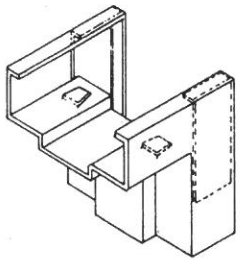

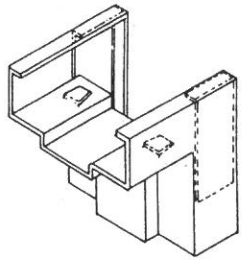

Anchors

Shown here are a few of our standard anchors for masonry, wood studs, steel studs, and solid partitions. Anchors are available either loose or welded in.

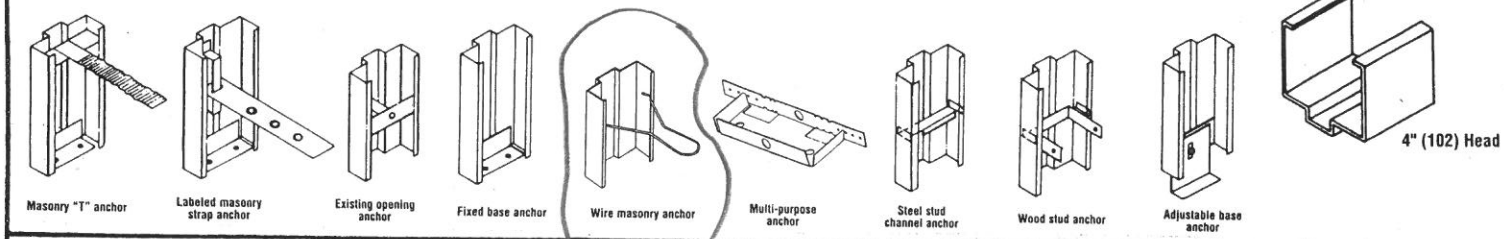

Narrow Face Frames

Curries offers pre-engineered, knock-down (KD) flush frames with face dimensions of 1" (25), 1-1/4" (32), 1-1/2" (38), 1-3/4" (44), or 2" (51).

Frame Sizes

Frame sizes are available to match door sizes, in any combination of singles or pairs. Non-standard width or height frames are available on special order.

JOB NO.	PROJECT	LOCATION	SHEET NO. 3 OF 5

CURRIES

ASSA ABLOY

LOCATION			DOOR DATA									FRAME DATA							HARDWARE INFORMATION	
TAG NO.	FROM	TO	DOOR TYPE	DOOR SIZE	DOOR GAUGE	THICKNESS	EXTERIOR DR.	UNDERCUT	ASTRAGAL	ACTIVE LEAF	SWING	LABEL	FRAME SIZE	JAMB DEPTH	FRAME SERIES	GAUGE	ANCHOR TYPE	ELEV. NO.	SHEET NO.	HARDWARE GROUP NO.	PREPARATION CODE
1			F	3070	16	1 3/4	Y	5/8			LHR		3070	7 3/4	M	16	MW	1	5	1	
2			F	3670	16	1 3/4	Y	5/8		X	LHR		6070	7 3/4	M	16	MW	2	5	2	
2			F	3670	16	1 3/4	Y	5/8			RHR		PAIR OF DOORS							2	

JOB NO.

SHEET NO. 4 OF 5

CURRIES

C-002
(Rev. 2-86)

OFFICE CENTER - P.P. 100150

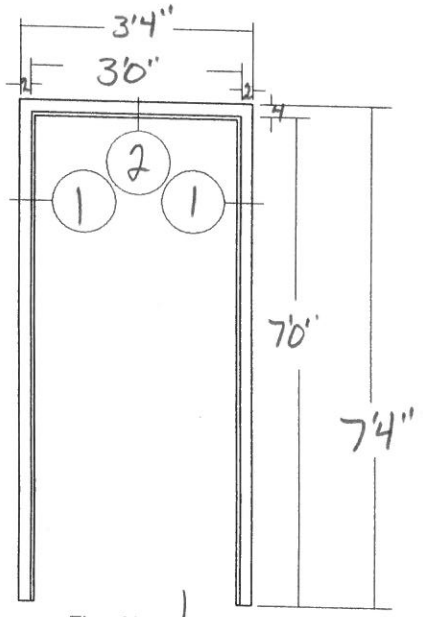

Elev. No. 1

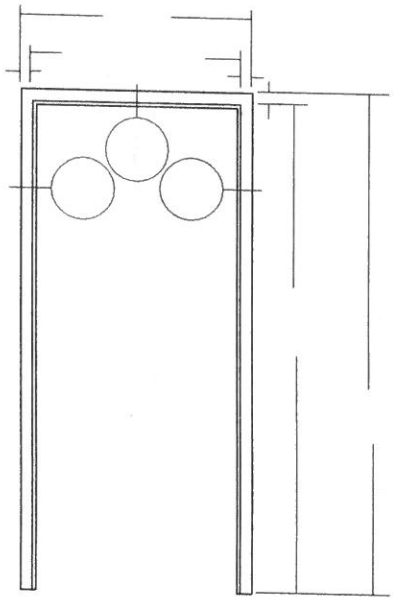

Elev. No. ___

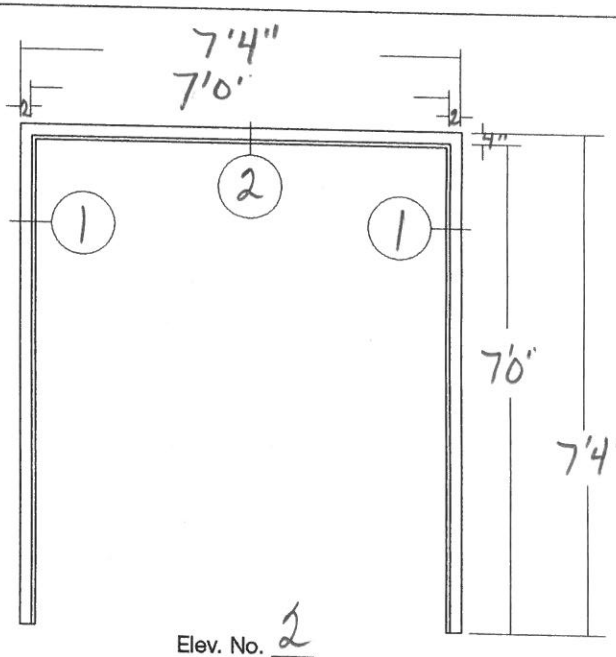

Elev. No. 2

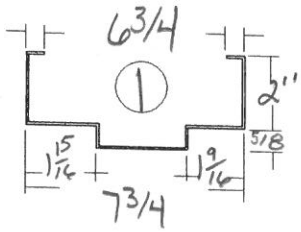

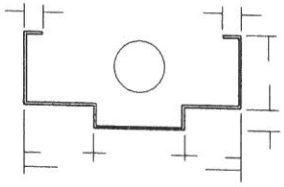

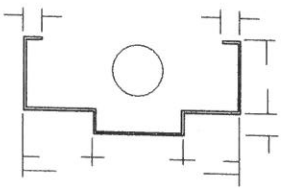

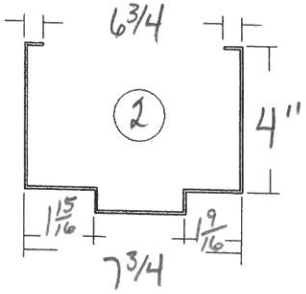

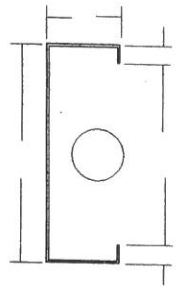

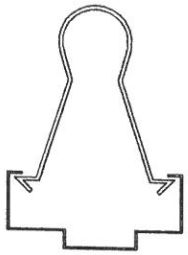

MW

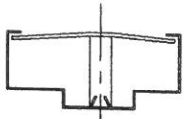

EWA

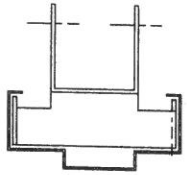

MP

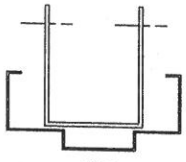

WS

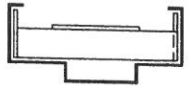

SC

JOB NO.	PROJECT	LOCATION	SHEET NO. 5 OF 5

CURRIES
ASSA ABLOY

ASSA ABLOY, the global leader in door opening solutions

dhu

DOORS & HARDWARE UNLIMITED, INC.
4125 NORTH STAR BLVD.
GREAT FALLS, MONTANA 59405
PHONE: 1-406-761-4465 FAX 1-406-761-4638

FINISH HARDWARE SCHEDULE

JOB:14-50 SAND COULEE WATER IMPROVEMENTS
SAND COULEE,MT.

CONTRACTOR: BOLAND CONSTRUCTION
PO BOX 7107
4701 NORTH STAR BLVD
GREAT FALLS,MT 59406

MANUFACTURER:

HINGES	(ST) STANLEY MFG
LOCKSET	(SC) SCHLAGE LOCK
CLOSERS	(LC) LCN MFG
FLUSH BOLTS	(IV) IVES MFG
THRESHOLDS,SWEEPS	(PE) PEMKO MFG
WEATHERSTRIP, ASTRAGALS	(PE) PEMKO MFG

KEYING: KEY LOCKS ALIKE

HARDWARE GROUP 1

DR 1 3'0" X 7'0" X 1 ¾" HM X HM

3 EA	(ST)	HINGES FBB179 4 ½" X 4 ½" NRP	US26D
1 EA	(SC)	LOCKSET D53PD-PLY 14-019,10-025	626
1 EA	(LC)	CLOSER P4040XP-TB	ALUM
1 EA	(PE)	THRESHOLD 270A-36"	
1 EA	(PE)	SWEEP 315CN-36"	
1 EA	(PE)	DRIP CAP 345A-40"	
1 SET	(PE)	WEATHERSTRIP 303APK (2-84" 1-36")	

HARDWARE GROUP 2

PR DR 2 2EA 3'6" X 7'0" X 1 ¾" HM X HM

6 EA	(ST)	HINGES FBB179 4 ½" X 4 ½" NRP	US26D
1 EA	(SC)	LOCKSET D53PD-PLY 14-019,10-025	626
2 EA	(TR)	FLUSH BOLTS FB458-12"	US26D
1 EA	(LC)	CLOSER P4040XP-TB	ALUM
1 EA	(PE)	THRESHOLD 270A-84"	
2 EA	(PE)	SWEEPS 315CN-42"	
1 SET	(PE)	WEATHERSTRIP 303APK (3-84")	
1 EA	(PE)	ASTRAGAL 355CS-84"	

130 Gibson Flats Road
Great Falls, MT. 59405
406-761-5765
Fax 406-761-7044

DICKMAN EXCAVATION SAND & GRAVEL

Fax

To: BARRY From: Dave Dickman

Fax: 761-7076 Pages: 2 W/COVER

Phone: Date:

Re: CC:

☐ Urgent ☐ For Review ☐ Please Comment ☐ Please Reply ☐ Please Recycle

• Comments:

3/4 A99 - P.E Bedding

DAVE

NTL Engineering & Geoscience, Inc.
1392 13th Ave SW•PO Box 3269•Great Falls, MT 59403
Tel. (406) 453-5400•Fax. 761-6655•Lab. 453-5480
kmunski@ntlengineering.com

REPORT TO: DAVE DICKMAN EXCAVATING
130 GIBSON FLAT ROAD
GREAT FALLS, MT 59405

JOB NO.: 91-12
SHEET: 1 OF 1
INVOICE NO.: 18083

REPORT OF: Sieve Analysis

PROJECT: Centene Corporation
Montana Claims Center

3/4" AGG.
Pit: Belding
Type 1

TEST DESCRIPTION

e received a sample of -3/4" coarse aggregate materials. We were instructed to perform a ance with ASTM C136. The laboratory test results are presented below.

TEST RESULTS

101138
-3/4" Coarse Aggregate

Screen or Sieve Size	Percent Passing Screen or Sieve Size Shown
3/4"	100
1/2"	69
3/8"	37
No.4	2.9

REVIEWED BY

All reports of test results are submitted as confidential property of our client. Any reproduction or publication of partial reports requires our expressed approval. Samples are disposed of after testing is completed unless other prior arrangements are made. Test results relate only to the materials actually sampled and tested.
NTL-AGG-05

130 Gibson Flats Road
Great Falls, MT. 59405
406-761-6795
Fax 406-761-7044

DICKMAN EXCAVATION SAND & GRAVEL

Fax

To: BARRY From: Dave Dickman

Fax: Pages: 5/W COVER

Phone: Date:

Re: CC:

☐ Urgent ☐ For Review ☐ Please Comment ☐ Please Reply ☐ Please Recycle

• Comments:

1½ R-M

¾ R.M

DAVE

Particle Size Distribution Report

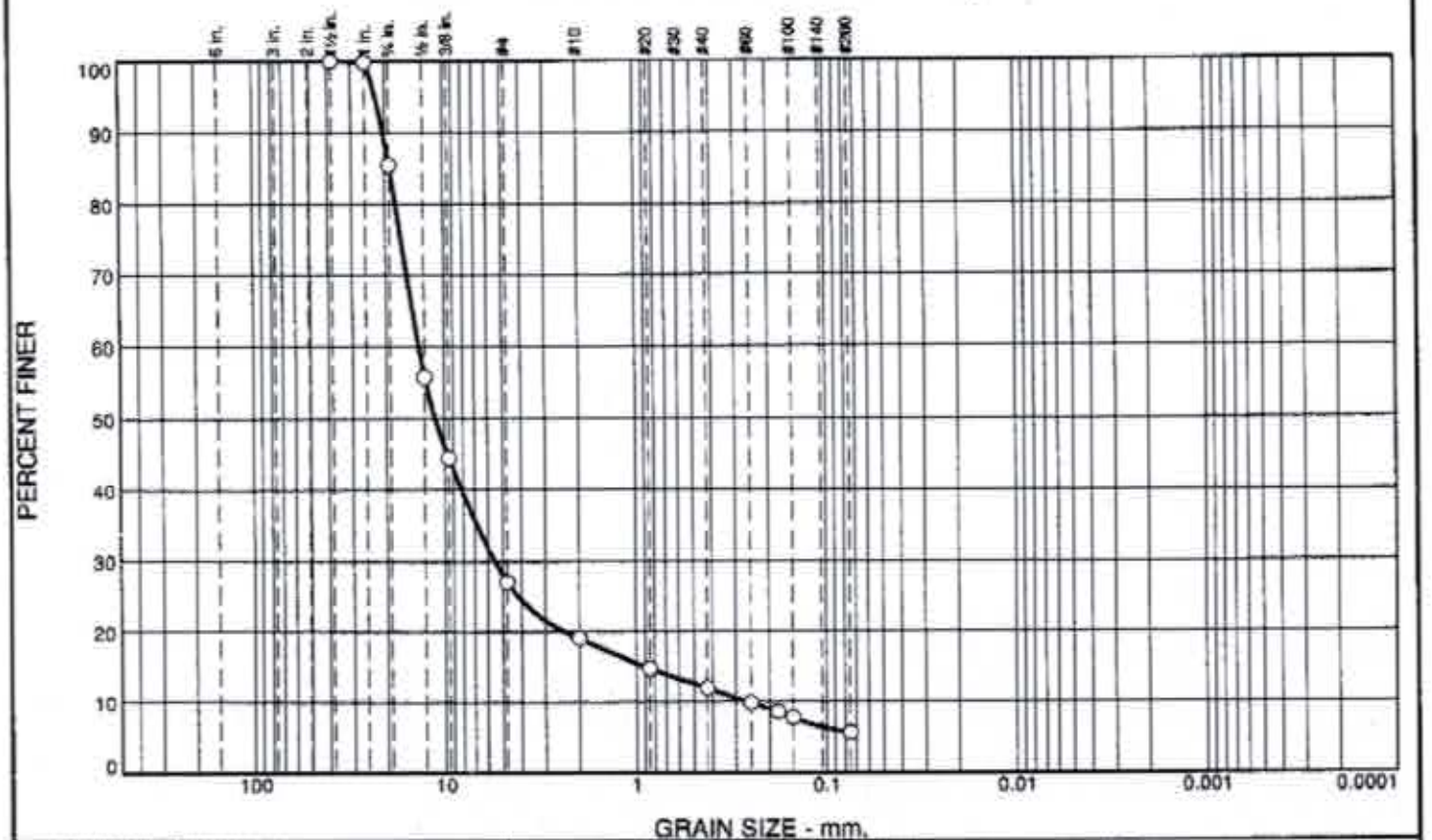

% +3"	% Gravel		% Sand			% Fines	
	Coarse	Fine	Coarse	Medium	Fine	Silt	Clay
0.0	14.5	58.4	8.0	7.1	6.4	5.6	

SIEVE SIZE	PERCENT FINER	SPEC.* PERCENT	PASS? (X=NO)
1.5"	100.0		
1"	99.8		
3/4"	85.5		
1/2"	55.8		
3/8"	44.4		
#4	27.1		
#10	19.1		
#20	14.8		
#40	12.0		
#60	9.9		
#80	8.6		
#100	7.7		
#200	5.6		

(no specification provided)

Soil Description

Poorly-Graded GRAVEL with Silt and Sand

Atterberg Limits

PL= LL= PI=

Coefficients

D_{90}= 20.4040 D_{85}= 18.9195 D_{60}= 13.5892
D_{50}= 11.2444 D_{30}= 5.5165 D_{15}= 0.8921
D_{10}= 0.2594 C_u= 52.39 C_c= 8.63

Classification

USCS= GP-GM AASHTO=

Remarks

Report No. A-9275-206

Location: Dickman 1-1/2" Base Sample 2
Sample Number: A-9275 **Date:**

TD&H THOMAS, DEAN & HOSKINS, INC. ENGINEERING CONSULTANTS
GREAT FALLS - BOZEMAN - KALISPELL MONTANA
SPOKANE
LEWISTON IDAHO

Client: Dickman Excavation
Project: Dickman Excavation -CMT
Project No: 12-188.060 **Figure**

Tested By: SSS/TJ **Checked By:**

Moisture-Density Test Report

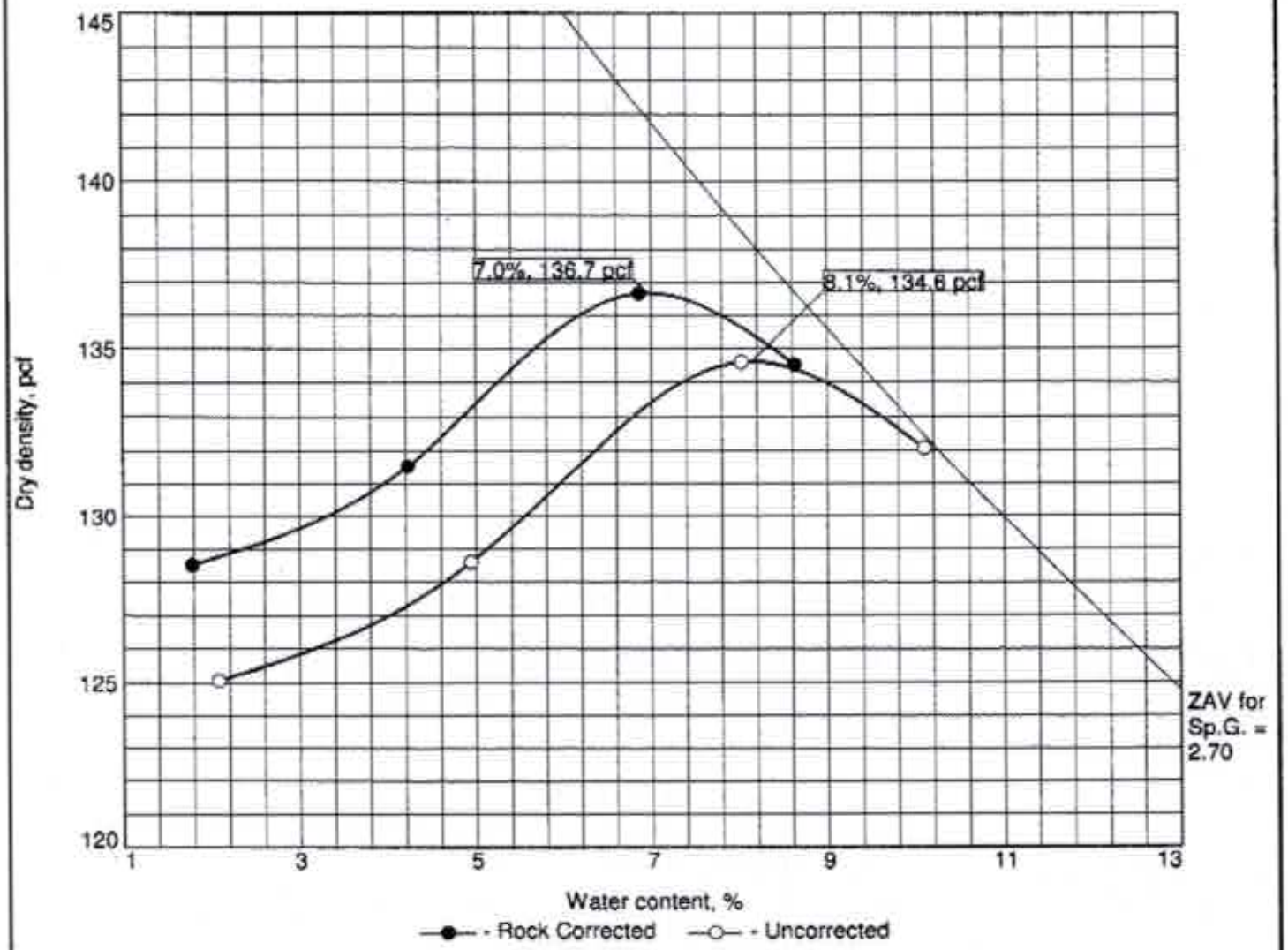

Test specification: AASHTO T 99 Method D Standard-RC-MC
ASTM D 4718-87/AASHTO T 224-86 Oversize Corr. Applied to Each Test Point

Elev/ Depth	Classification		Nat. Moist.	Sp.G.	LL	PI	% > 3/4 In.	% < No.200
	USCS	AASHTO						
	GP-GM			2.7			14.5	5.6

ROCK CORRECTED TEST RESULTS	UNCORRECTED	MATERIAL DESCRIPTION
Maximum dry density = 136.7 pcf	134.6 pcf	Poorly-Graded GRAVEL with Silt and Sand
Optimum moisture = 7.0 %	8.1 %	

Project No. 12-188-060 **Client:** Dickman Excavation
Project: Dickman Excavation -CMT

○ **Location:** Dickman 1-1/2" Base Sample 2 **Sample Number:** A-9275

TD&H THOMAS, DEAN & HOSKINS, INC.
ENGINEERING CONSULTANTS

Remarks:
Report No. A-9275-204

Figure

Tested By: TJ **Checked By:**

Particle Size Distribution Report

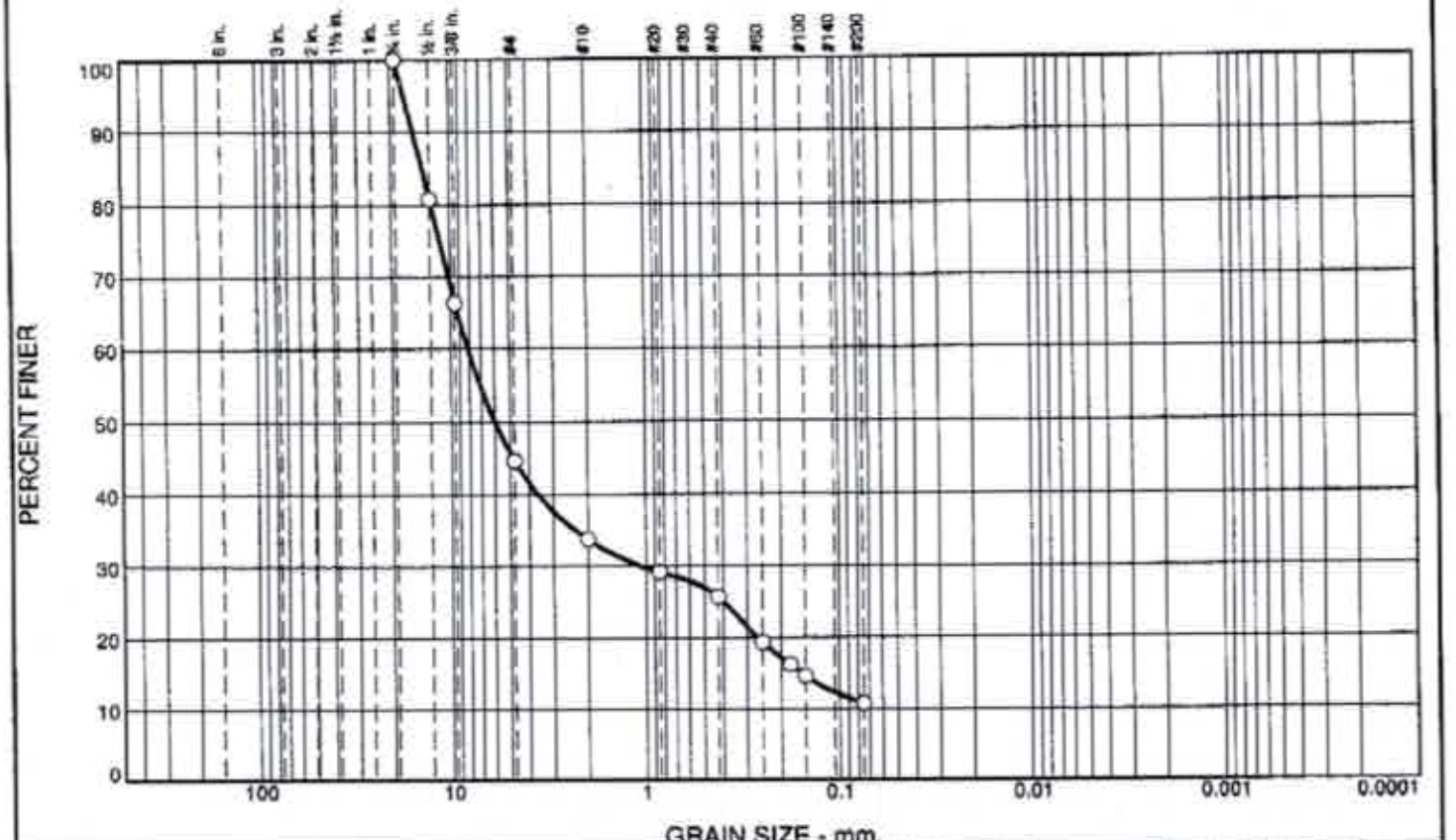

% +3"	% Gravel		% Sand			% Fines	
	Coarse	Fine	Coarse	Medium	Fine	Silt	Clay
0.0	0.0	55.4	10.8	8.1	14.9	10.8	

SIEVE SIZE	PERCENT FINER	SPEC.* PERCENT	PASS? (X=NO)
3/4"	100.0		
1/2"	80.8		
3/8"	66.4		
#4	44.6		
#10	33.8		
#20	29.1		
#40	25.7		
#60	19.3		
#80	16.3		
#100	14.6		
#200	10.8		

(no specification provided)

Soil Description

Well-Graded GRAVEL with silt and sand

Atterberg Limits

PL= LL= PI=

Coefficients

D_{90}= 15.3513 D_{85}= 13.8303 D_{60}= 8.1958
D_{50}= 6.0052 D_{30}= 1.0648 D_{15}= 0.1564
D_{10}= C_u= C_c=

Classification

USCS= GW-GM AASHTO=

Remarks

Report No: A-9269-206

Location: Dickman 3/4" Base
Sample Number: A-9269

Date: 4/25/2014

TD&H THOMAS, DEAN & HOSKINS, INC. ENGINEERING CONSULTANTS
GREAT FALLS - BOZEMAN - KALISPELL SPOKANE LEWISTON MISSOULA WASHINGTON IDAHO

Client: Dickman Excavation
Project: Dickman Excavation -CMT

Project No: 12-188-060 **Figure**

Tested By: SSS/TJ **Checked By:**

Moisture-Density Test Report

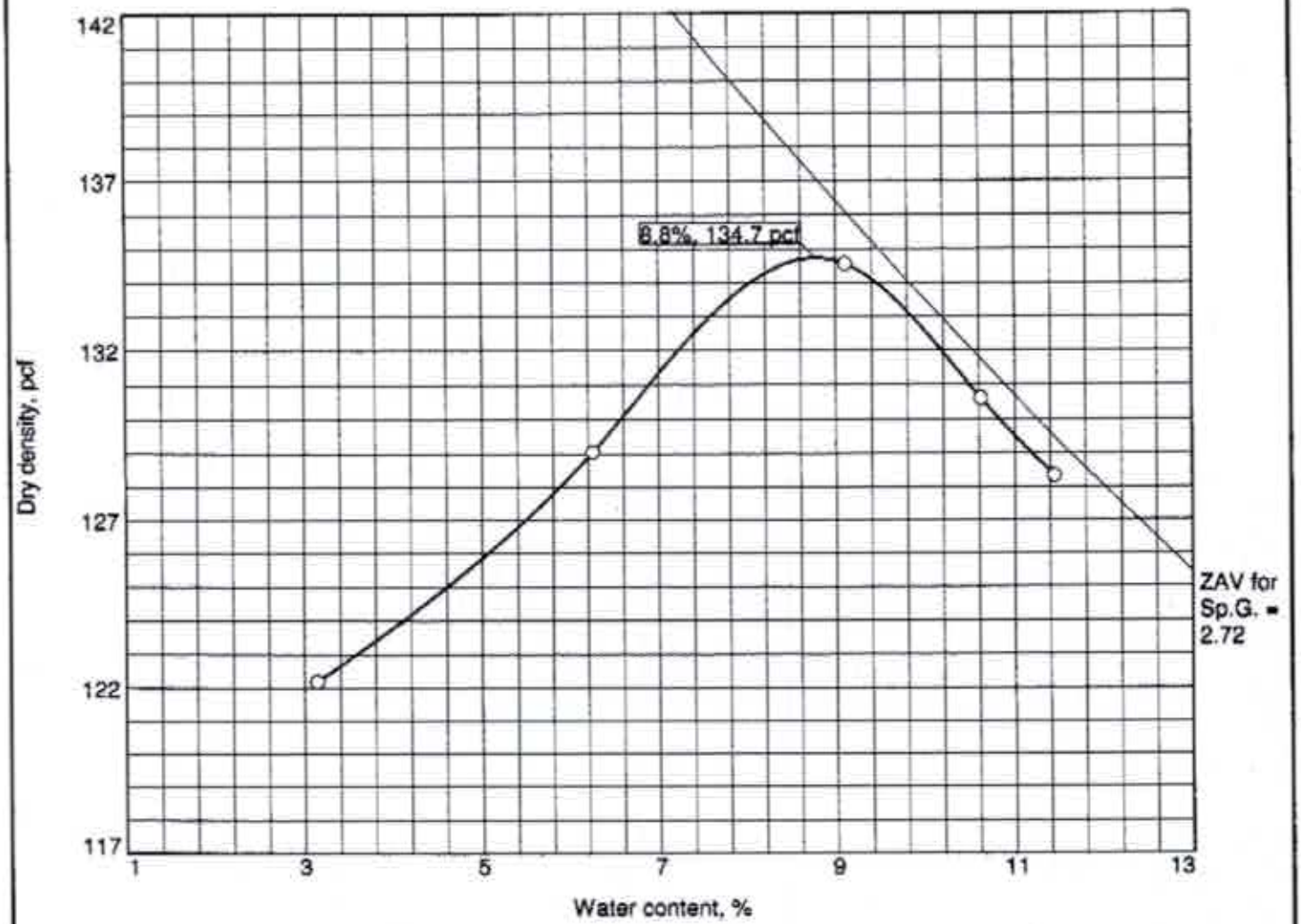

Test specification: AASHTO T 99-01 Method D Standard

Elev/ Depth	Classification		Nat. Moist.	Sp.G.	LL	PI	% > 3/4 in.	% < No.200
	USCS	AASHTO						
	GW-GM			2.72			0.0	10.8

TEST RESULTS	MATERIAL DESCRIPTION
Maximum dry density = 134.7 pcf Optimum moisture = 8.8 %	Well-Graded GRAVEL with silt and sand

Project No. 12-188-060 **Client:** Dickman Excavation
Project: Dickman Excavation -CMT

○ **Location:** Dickman 3/4" Base **Sample Number:** A-9269

Remarks:
Report No. A-9269-204

TD&H THOMAS, DEAN & HOSKINS, INC.
ENGINEERING CONSULTANTS

Figure

Tested By: SSS/TJ **Checked By:**

Interior CMU Wall

- 16 #4 bent dowels 3'-4" tag # 6 (two at each O.C.)
- 32 # 4 vertical bars 6'-0" each tag #8, (two at each O.C. lapped to span wall height)
- 9 rows #4 horizontal @1'-4" tag #16
- 3 runs of 2 #4 @ bond beams @1'-4" each tag #16
- use #4 corner bars 2'-1"x2'-1" tag #13 at horizontals and bond beams

Exterior CMU Wall

- 72 #4 bent dowels 1'-8"x 1'-8" tag # 6 (two at each O.C.)
- 144 #4 vertical #4 bars 6'-0" each, tag #8 (two at each O.C. lapped to span wall height)
- 9 rows continuous #4 bar @3'-8" each on walls without doors tag # 9
  with corner bars #4 @2'-1"x2'-1" tag #13
- 3 rows continuous #4 bar @3'-8" each above doors tag #9
  with corner bars #4 @2'-1"x2'-1" tag #13

* See 1/P-4 and 5/P-4 for more CMU rebar placement

ARCHITECTURAL/STRUCTURAL NOTES

I. GOVERNING CODES:
A. UNIFORM BUILDING CODE, MOST CURRENT EDITION
B. ACI 318-83, 315-80
C. AISC MANUAL OF STEEL CONSTRUCTION 8TH EDITION

II. STRENGTH OF MATERIALS:

	f'c	SLUMP
CONCRETE:		
WALLS & SLABS	4000 PSI	2" TO 4" MAX.

III. REINFORCING CONCRETE:
A. DETAILING OF REINFORCING WILL BE IN ACCORDANCE WITH THE LATEST ACI DETAILING MANUAL.

B. CLEAR CONCRETE COVER FOR REINFORCING SHALL BE AS FOLLOWS UNLESS NOTED OTHERWISE ON THE DRAWINGS:
FOOTINGS: 3" FROM BOTTOM AND SIDES
STEM WALLS: 2" FROM SIDES AND 2" FROM TOP AND BOTTOM
SLABS ON GRADE: AS NOTED ON DRAWINGS
STRUCTURAL SLABS: 3/4"
BEAMS AND COLUMNS: 1 1/2" FOR PRIMARY REINFORCED TIES, STIRRUPS AND SPIRALS

C. WHERE LAPPED SPLICES IN REINFORCING OCCUR, THE MINIMUM LAP SHALL BE MADE AS FOLLOWS UNLESS NOTED OTHERWISE:
VERTICAL REINFORCING: 30 BAR DIA. OR 18" MINIMUM
HORIZONTAL REINFORCING: 30 BAR DIA. OR 18" MINIMUM
HORIZONTAL CORNER BARS: 30 BAR DIA. OR 18" MINIMUM

D. ALL HORIZONTAL REINFORCING IN FOOTINGS, WALLS AND BEAMS SHALL BE CONTINUOUS AROUND CORNERS (OR AT WALL INTERSECTIONS) OR HAVE CORNER BARS OF THE SAME SIZE AND SPACING AS THE HORIZONTAL BARS AND LAP A MINIMUM OF 30 BAR DIAMETERS OR 18" MINIMUM, UNLESS NOTED OTHERWISE.

E. FORM TIES SHALL BE EITHER OF THE THREADED OR SNAP OFF TYPE SO THAT NO METAL WILL BE LEFT WITHIN 1" OF THE SURFACE OF THE WALL. FOLLOWING REMOVAL OF FORM TIES, RECESSES ARE TO BE CAREFULLY FILLED AND POINTED WITH MORTAR.

IV. STRUCTURAL AND MISCELLANEOUS STEEL:
A. ALL STRUCTURAL AND MISCELLANEOUS STEEL MEMBERS, SHAPES AND CONNECTIONS SHALL CONFORM TO ASTM A36.

B. THE CONTRACTOR SHALL BE RESPONSIBLE FOR CHECKING THE ARCHITECTURAL DRAWINGS FOR ALL MISCELLANEOUS STEEL.

C. BOLTS SHALL BE STAINLESS STEEL AND CONFORM TO ASTM A307 BOLTS UNLESS OTHERWISE, WITH SIZES AS SHOWN ON THE DRAWINGS. ANCHOR BOLTS EMBEDDED IN CONCRETE SHALL BE STAINLESS STEEL ASTM A307 BOLTS OR A36 THREADED BARS

D. ALL WELDING SHALL BE DONE BY CERTIFIED WELDERS AND SHALL BE IN ACCORDANCE WITH THE LATEST STANDARDS OF THE AWS AND SPECIFICATIONS.

V. MASONRY:
A. ALL MASONRY UNITS SHALL BE TYPE I, GRADE N UNITS WITH TYPE S MORTAR. f'_m = 1500 PSI FULLY GROUTED

B. CELLS CONTAINING REBAR SHALL BE GROUTED SOLID FROM THE BOTTOM TO THE TOP OF THE WALL IN ACCORDANCE WITH UBC REGULATION. BOTTOM OF WALLS AT ALL CELLS TO BE GROUTED WHERE THE GROUT POUR EXCEEDS 4' IN HEIGHT.

C. LAP ALL BARS 40 DIAMETERS OR 25" MINIMUM UNLESS OTHERWISE NOTED.

Footing

- 3 runs continuous #4 bar @4'-9" each, tag # 1
  w/corner bars 1'-6"x1'-6" tag # 2
- 120 bent dowels #4 bar tag #3 0'-10"x1'-8" (into stem wall)

Stem Wall

- 6 runs continuous #4 @3'-7" each, tag #5
  w/corner bars 1'-6"x1'-6" tag #2
- 120 vertical #4 4'-8" each tag #4
- 120 bent #4 dowels 1'-8"x1'-8" tag #6 (into slab)

Slab

-60 #4 bars @3'-9" tag #7

Exterior CMU Wall Bond Beams

- 3 runs of 2 #4 bars per beam @3'-8" (On walls without Doors) tag #9
- 1 run of 2 #4 bars per beam @3'-8" above wall with small door tag #9
- 1 run of 2 #4 bars per beam @3'-8" above wall with large door tag #9
- 2 runs of 2 #4 bars per beam 4'-2" east of small door tag #10
- 2 runs of 2 #4 bars per beam 15'-10" west of small door tag #11
- 2 runs of 2 #4 bars per beam 8'-0" both sides of large door tag #12
  * use #4 corner bars 2'-1"x2'-1" at all bond beam corners tag #13

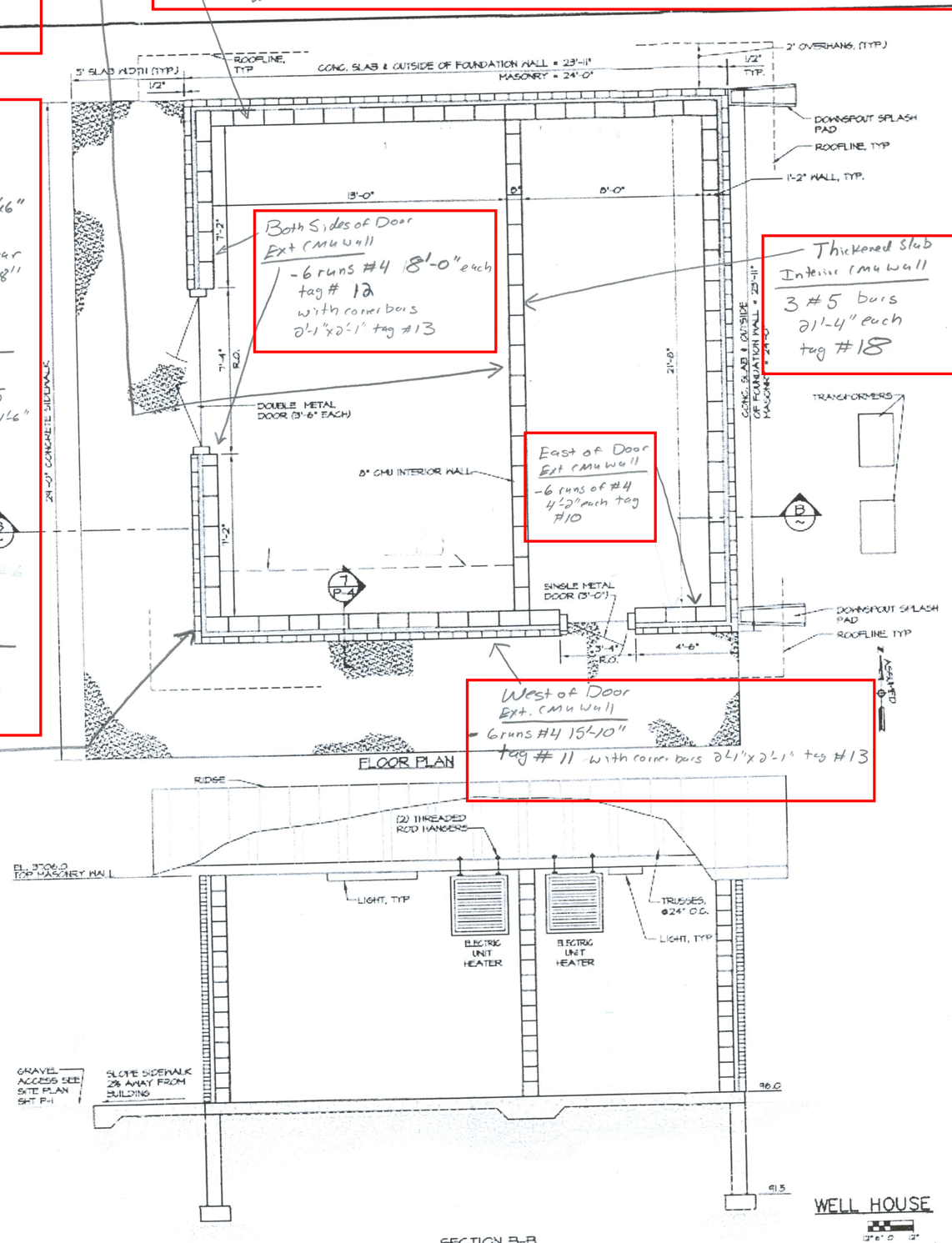

Revisions	By	Date

File No.	Job No.
43.109	1207 1207-P-2
Date	Scale
3/21/14	AS SHOWN

Professional Seal

Engineers
Environmental Specialists
Planners
Designers
Surveyors
NC Engineering
4509 North Star Boulevard
P.O. Box 6359
Great Falls, MT 59406
Phone 406-453-5478
Fax 406-453-2009

Owner
SAND COULEE WATER DISTRICT

Project Title
SAND COULEE WATER IMPROVEMENTS
2014

Sheet Title
PUMPING (WELL HOUSE)
ARCHITECTURAL PLAN

Sheet P-2 Of

Copyright © 2013 NC, All Rights Reserved
File # FILE #

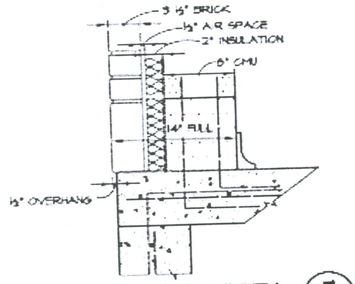

TYP. EXTERIOR WALL WIDTH — 7 / P-4

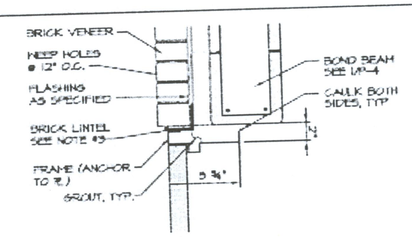

HEAD

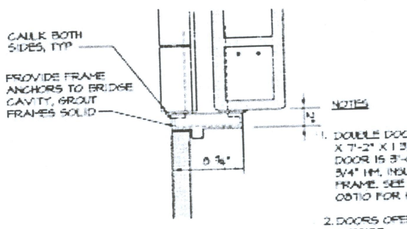

JAMB

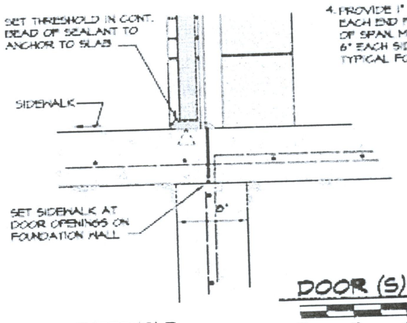

THRESHOLD

DOOR (S) — 6 / P-4

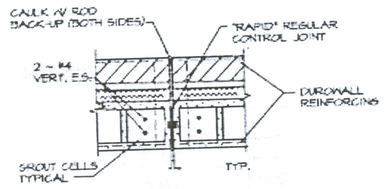

TYP. MASONRY CONTROL JOINT — 5 / P-4
1" = 1'-0"

-36 #5 bar 6'-0" each verticals at intersections tag #17

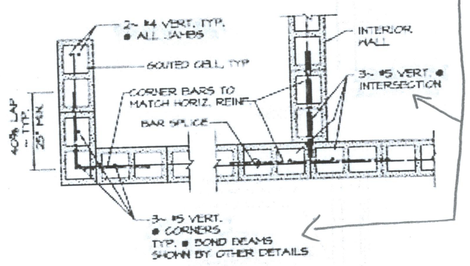

TYPICAL CMU PLAN — 4 / P-4
12" 6" 0" 12"

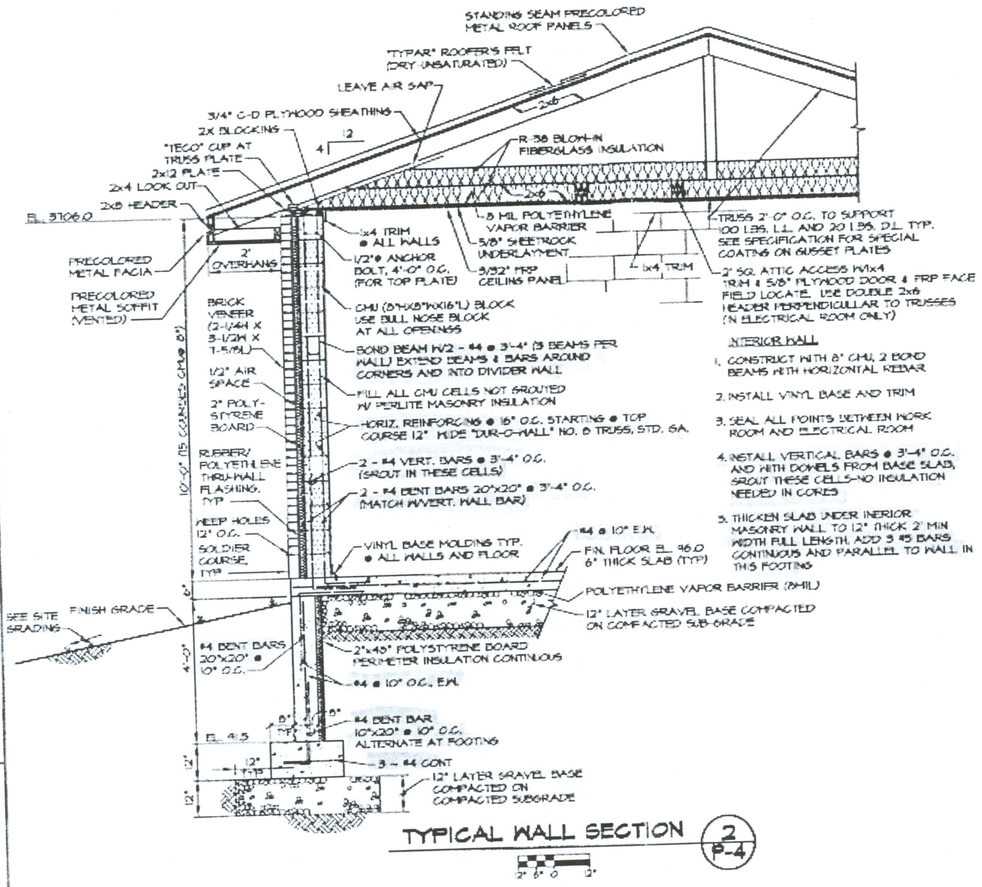

TYPICAL WALL SECTION — 2 / P-4
2" 6" 0" 2"

Short Bond Beams
- 2 runs of 2 #5 bar above large door tag # 14 9'-0" each
- 2 runs of 2 #5 bar above small door tag #15 5'-0" each

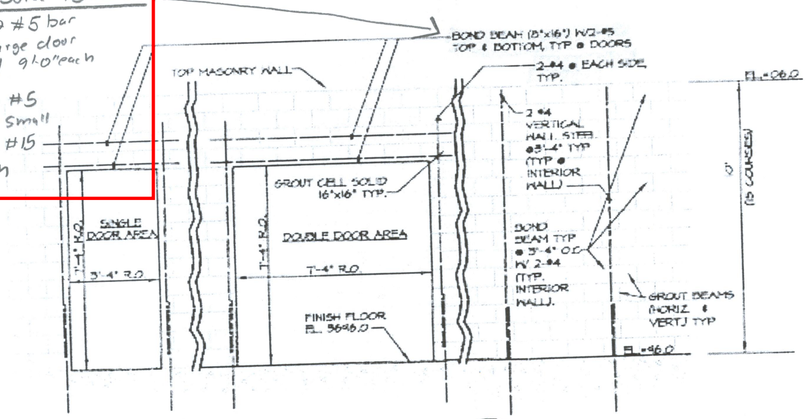

MASONRY WALL & DOOR OPENINGS — 1 / P-4
12" 6" 0" 12"

MASONRY

Revisions	By	Date

File No.	Job No.
43.109	1207 1207-P-4
Date	Scale
3/21/14	AS SHOWN

Professional Seal

Engineers
Environmental Specialists
Planners
Designers
Surveyors

NCI Engineering

4509 North Star Boulevard
P.O. Box 6330
Great Falls, MT 59406
Phone 406-453-5478
Fax 406-453-2069

Owner
SAND COULEE WATER DISTRICT

Project Title
SAND COULEE WATER IMPROVEMENTS 2014

Sheet Title
PUMPING (WELL HOUSE) MASONARY

Sheet P-4

Copyright © 2012 NCI, All Rights Reserved
File # FILE #

ANDERSON STEEL SUPPLY
3811 RIVER DRIVE NORTH
GREAT FALLS, MT 59405
Ph. (406) 761-4354
Fax (406) 761-6441

Contractor: ED BOLAND CONSTRUCTION
Project: SAND COULEE WATER TANK
Location:
Material For:
Material:

Order No.:
Bar List No.: 302775-1
Bar List Date: 09/16/14
Job No.: 302775
Drawing No.:
Sheet No.: 1 of 2

D.O.T.:
D.O.T. ID#:
Delivery Date:

Inspector:
Contact:
Phone:

Input By:
Detailer: JFK
Phone:

WEIGHT SUMMARY (3119 LBS)

	HEAVY BENT		LIGHT BENT		STRAIGHT		STOCK		TOTAL	
SIZE	Qty	Weight	Qty	Weight	Qty	Weight	Qty	Weight	Qty	Weight
#4 Gr 60	108	1276	66	430	96	930			270	2636
#6 Gr 60	12	357			12	126			24	483
TOTALS	120	1633	66	430	108	1056			294	3119

Longest bar is: size 4, Straight, 20-00 Stock Rebar lbs = 0 Non-Stock Rebar lbs = 3119

QTY	SZ/GR	LENGTH	MARK	TYP	A	B	C	D	E	F/R	G	J	O	H	K	LB
5	#6 Gr60	20-00		9		20-00				15-06			18-07¾	3-01½		150
5	#6 Gr60	20-00		9		20-00				15-05			18-07½	3-01½		150
1	#6 Gr60	19-05		9		19-04¾				15-06			18-01¾	2-11¼		29
1	#6 Gr60	18-11		9		18-10½				15-05			17-08½	2-09½		28
45	#4 Gr60	20-00		9		20-00				14-05			18-05¼	3-04		601
45	#4 Gr60	20-00		9		20-00				15-04			18-07¼	3-01¾		601
66	#4 Gr60	9-09		S4	0-08	4-01	0-11	4-01								430
9	#4 Gr60	8-04		9		8-04				15-04			8-02¾	0-06¾		50
9	#4 Gr60	4-00		9		4-00				14-05			3-11¾	0-01¾		24

ANDERSON STEEL SUPPLY
3811 RIVER DRIVE NORTH
GREAT FALLS, MT 59405
Ph. (406) 761-4354
Fax (406) 761-6441

Contractor: ED BOLAND CONSTRUCTION
Project: SAND COULEE WATER TANK
Location:
Material For:
Material:

Order No.:
Bar List No.: 302775-1
Bar List Date: 09/16/14
Job No.: 302775
Drawing No.:
Sheet No.: 2 of 2

QTY	SIZE	LENGTH	MARK	LB
12	6	7-00		126
44	4	20-00		588
4	4	17-08		47
4	4	14-08		39

QTY	SIZE	LENGTH	MARK	LB
4	4	11-00		29
4	4	10-10		29
8	4	10-07		57
4	4	10-02		27
4	4	9-07		26

QTY	SIZE	LENGTH	MARK	LB
4	4	8-10		24
4	4	7-11		21
4	4	6-10		18
4	4	5-06		15
4	4	3-11		10

RECEIVED BY: _____ DATE: _____ Report Printed Tuesday, Sep 16 2014 12:56 PM

Interior CMU Wall

- 16 #4 bent dowels 3'-4" tag # 6 (two at each O.C.)
- 32 # 4 vertical bars 6'-0" each tag #8, (two at each O.C. lapped to span wall height)
- 9 rows #4 horizontal @1'-4" tag #16
- 3 runs of 2 #4 @ bond beams @1'-4" each tag #16
- use #4 corner bars 2'-1"x2'-1" tag #13 at horizontals and bond beams

Exterior CMU Wall

- 72 #4 bent dowels 1'-8"x 1'-8" tag # 6 (two at each O.C.)
- 144 #4 vertical #4 bars 6'-0" each, tag #8 (two at each O.C. lapped to span wall height)
- 9 rows continuous #4 bar @3'-8" each on walls without doors tag # 9
  with corner bars #4 @2'-1"x2'-1" tag #13
- 3 rows continuous #4 bar @3'-8" each above doors tag #9
  with corner bars #4 @2'-1"x2'-1" tag #13

* See 1/P-4 and 5/P-4 for more CMU rebar placement

ARCHITECTURAL/STRUCTURAL NOTES

I. GOVERNING CODES:
A. UNIFORM BUILDING CODE, MOST CURRENT EDITION
B. ACI 318-83, 315-80
C. AISC MANUAL OF STEEL CONSTRUCTION 8TH EDITION

II. STRENGTH OF MATERIALS:

	f'c	SLUMP
CONCRETE:		
WALLS & SLABS	4000 PSI	2" TO 4" MAX.

III. REINFORCING CONCRETE:
A. DETAILING OF REINFORCING WILL BE IN ACCORDANCE WITH THE LATEST ACI DETAILING MANUAL.

B. CLEAR CONCRETE COVER FOR REINFORCING SHALL BE AS FOLLOWS UNLESS NOTED OTHERWISE ON THE DRAWINGS:
FOOTINGS: 3" FROM BOTTOM AND SIDES
STEM WALLS: 2" FROM SIDES AND 2" FROM TOP AND BOTTOM
SLABS ON GRADE: AS NOTED ON DRAWINGS
STRUCTURAL SLABS: 3/4"
BEAMS AND COLUMNS: 1 1/2" FOR PRIMARY REINFORCED TIES, STIRRUPS AND SPIRALS

C. WHERE LAPPED SPLICES IN REINFORCING OCCUR, THE MINIMUM LAP SHALL BE MADE AS FOLLOWS UNLESS NOTED OTHERWISE:
VERTICAL REINFORCING: 30 BAR DIA. OR 18" MINIMUM
HORIZONTAL REINFORCING: 30 BAR DIA. OR 18" MINIMUM
HORIZONTAL CORNER BARS: 30 BAR DIA. OR 18" MINIMUM

D. ALL HORIZONTAL REINFORCING IN FOOTINGS, WALLS AND BEAMS SHALL BE CONTINUOUS AROUND CORNERS (OR AT WALL INTERSECTIONS) OR HAVE CORNER BARS OF THE SAME SIZE AND SPACING AS THE HORIZONTAL BARS AND LAP A MINIMUM OF 30 BAR DIAMETERS OR 18" MINIMUM, UNLESS NOTED OTHERWISE.

E. FORM TIES SHALL BE EITHER OF THE THREADED OR SNAP OFF TYPE SO THAT NO METAL WILL BE LEFT WITHIN 1" OF THE SURFACE OF THE WALL. FOLLOWING REMOVAL OF FORM TIES, RECESSES ARE TO BE CAREFULLY FILLED AND POINTED WITH MORTAR.

IV. STRUCTURAL AND MISCELLANEOUS STEEL:
A. ALL STRUCTURAL AND MISCELLANEOUS STEEL MEMBERS, SHAPES AND CONNECTIONS SHALL CONFORM TO ASTM A36.

B. THE CONTRACTOR SHALL BE RESPONSIBLE FOR CHECKING THE ARCHITECTURAL DRAWINGS FOR ALL MISCELLANEOUS STEEL.

C. BOLTS SHALL BE STAINLESS STEEL AND CONFORM TO ASTM A307 BOLTS UNLESS OTHERWISE, WITH SIZES AS SHOWN ON THE DRAWINGS. ANCHOR BOLTS EMBEDDED IN CONCRETE SHALL BE STAINLESS STEEL ASTM A307 BOLTS OR A36 THREADED BARS

D. ALL WELDING SHALL BE DONE BY CERTIFIED WELDERS AND SHALL BE IN ACCORDANCE WITH THE LATEST STANDARDS OF THE AWS AND SPECIFICATIONS.

V. MASONRY:
A. ALL MASONRY UNITS SHALL BE TYPE I, GRADE N UNITS WITH TYPE S MORTAR. f'_m = 1500 PSI FULLY GROUTED

B. CELLS CONTAINING REBAR SHALL BE GROUTED SOLID FROM THE BOTTOM TO THE TOP OF THE WALL IN ACCORDANCE WITH UBC REGULATION. BOTTOM OF WALLS AT ALL CELLS TO BE GROUTED WHERE THE GROUT POUR EXCEEDS 4' IN HEIGHT.

C. LAP ALL BARS 40 DIAMETERS OR 25" MINIMUM UNLESS OTHERWISE NOTED.

Footing

- 3 runs continuous #4 bar @4'-9" each, tag # 1
  w/corner bars 1'-6"x1'-6" tag # 2
- 120 bent dowels #4 bar tag #3 0'-10"x1'-8" (into stem wall)

Stem Wall

- 6 runs continuous #4 @3'-7" each, tag #5
  w/corner bars 1'-6"x1'-6" tag #2
- 120 vertical #4 4'-8" each tag #4
- 120 bent #4 dowels 1'-8"x1'-8" tag #6 (into slab)

Slab

-60 #4 bars @3'-9" tag #7

Exterior CMU Wall Bond Beams

- 3 runs of 2 #4 bars per beam @3'-8" (On walls without Doors) tag #9
- 1 run of 2 #4 bars per beam @3'-8" above wall with small door tag #9
- 1 run of 2 #4 bars per beam @3'-8" above wall with large door tag #9
- 2 runs of 2 #4 bars per beam 4'-2" east of small door tag #10
- 2 runs of 2 #4 bars per beam 15'-10" west of small door tag #11
- 2 runs of 2 #4 bars per beam 8'-0" both sides of large door tag #12
  * use #4 corner bars 2'-1"x2'-1" at all bond beam corners tag #13

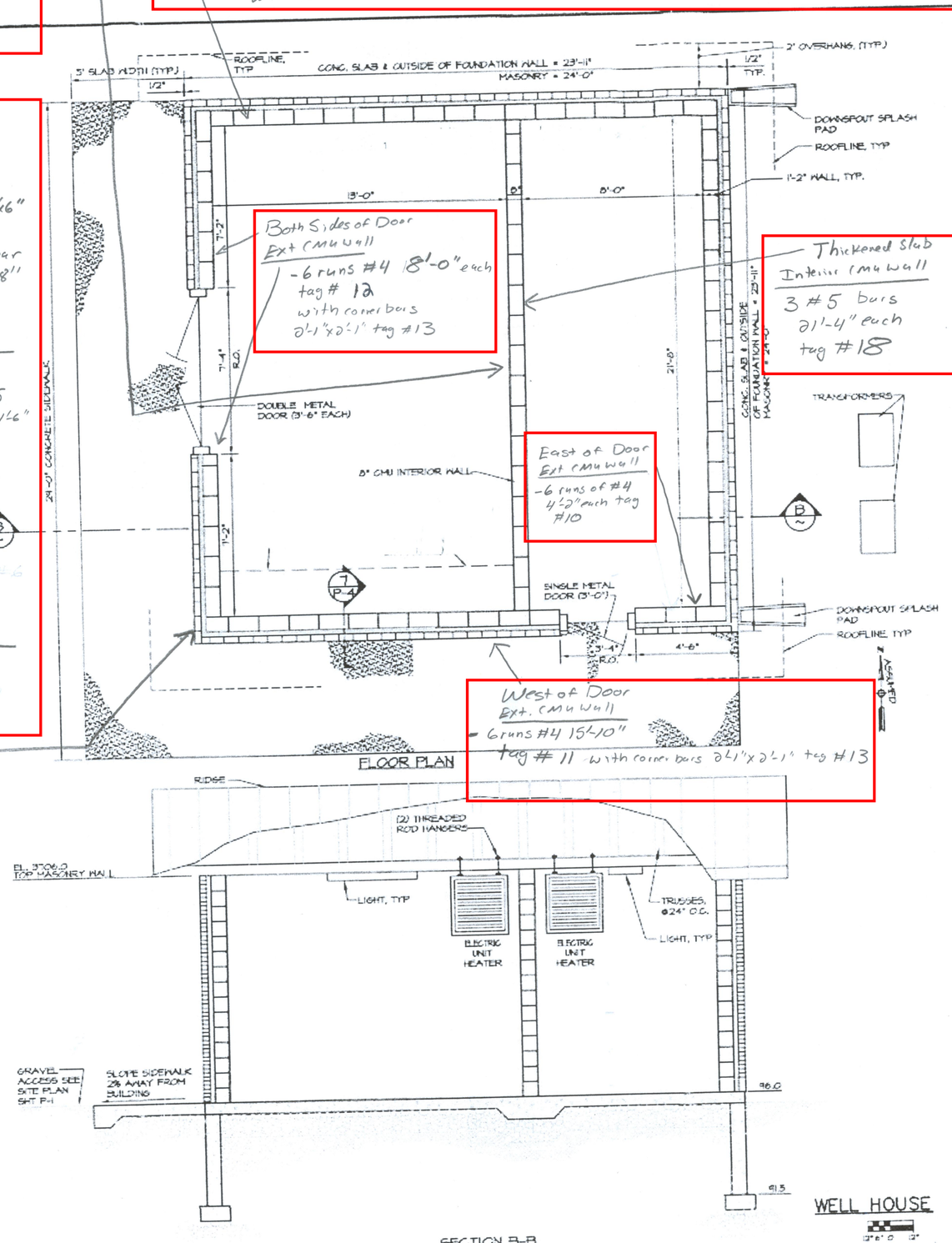

Revisions	By	Date

File No.	Job No.
43.109	1207 1207-P-2
Date	Scale
3/21/14	AS SHOWN

Professional Seal

Engineers
Environmental Specialists
Planners
Designers
Surveyors
NC Engineering
4509 North Star Boulevard
P.O. Box 6359
Great Falls, MT 59406
Phone 406-453-5478
Fax 406-453-2009

Owner
SAND COULEE WATER DISTRICT

Project Title
SAND COULEE WATER IMPROVEMENTS
2014

Sheet Title
PUMPING (WELL HOUSE)
ARCHITECTURAL PLAN

Sheet P-2 Of

Copyright © 2013 NC, All Rights Reserved
File # FILE #

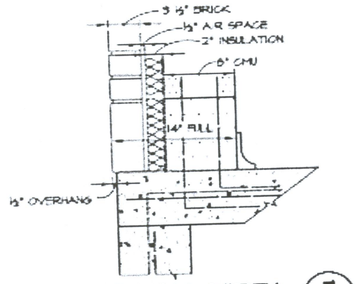

TYP. EXTERIOR WALL WIDTH — 7 / P-4

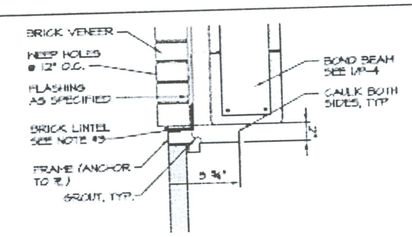

HEAD

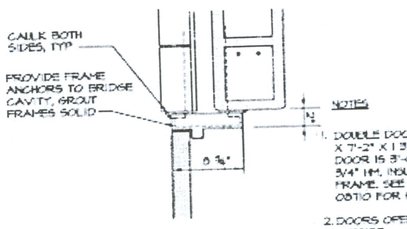

JAMB

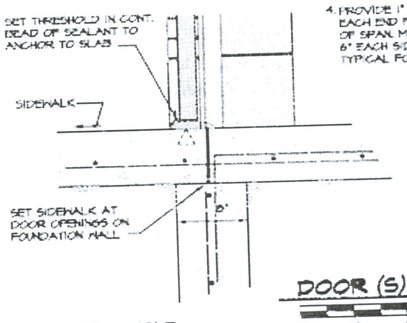

THRESHOLD

DOOR (S) — 6 / P-4

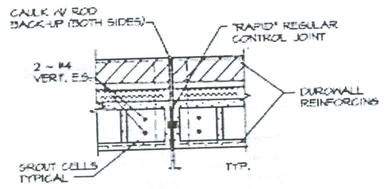

TYP. MASONRY CONTROL JOINT — 5 / P-4
1" = 1'-0"

-36 #5 bar 6'-0" each verticals at intersections tag #17

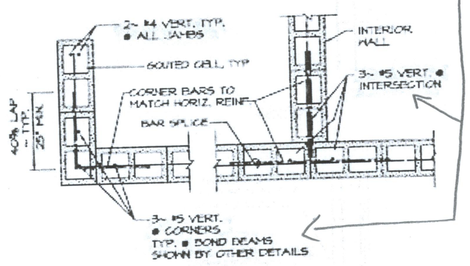

TYPICAL CMU PLAN — 4 / P-4
12" 6" 0" 12"

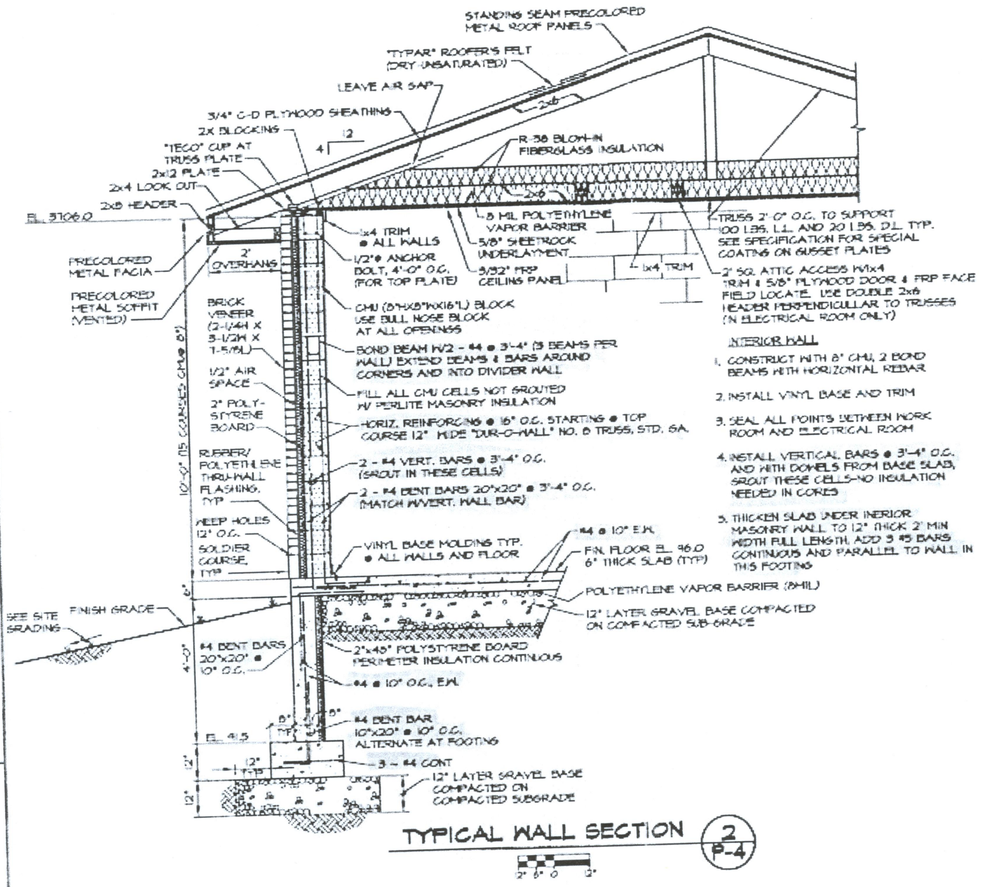

TYPICAL WALL SECTION — 2 / P-4
2" 6" 0" 2"

Short Bond Beams
- 2 runs of 2 #5 bar above large door tag # 14 9'-0" each
- 2 runs of 2 #5 bar above small door tag #15 5'-0" each

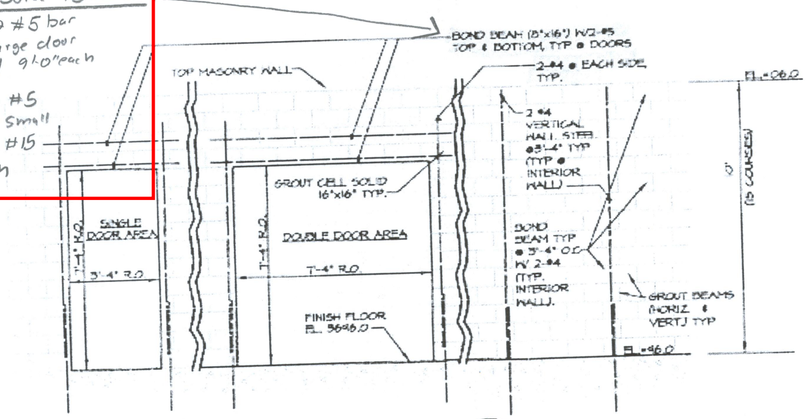

MASONRY WALL & DOOR OPENINGS — 1 / P-4
12" 6" 0" 12"

MASONRY

Revisions	By	Date

File No.	Job No.
43.109	1207 1207-P-4
Date	Scale
3/21/14	AS SHOWN

Professional Seal

Engineers
Environmental Specialists
Planners
Designers
Surveyors

NCI Engineering

4509 North Star Boulevard
P.O. Box 6330
Great Falls, MT 59406
Phone 406-453-5478
Fax 406-453-2069

Owner
SAND COULEE WATER DISTRICT

Project Title
SAND COULEE WATER IMPROVEMENTS 2014

Sheet Title
PUMPING (WELL HOUSE) MASONARY

Sheet P-4

Copyright © 2012 NCI, All Rights Reserved
File # FILE #

PRECAST PLANT:
2101 N.W. BYPASS
BLOCK PLANT:
1800 VAUGHN RD.
PHONE (406) 761-5200
FAX (406) 727-6532

THE FAGENSTROM CO.

P.O. BOX 2623
GREAT FALLS, MONTANA 59403

SEC. 04300 UNIT MASONRY
2.0 - MATERIALS
2.1 - CONC. MASONRY UNITS

September 8, 2014

Cooper Construction
406-19th Street S.W.
Great Falls, MT 59404

RE: Sand Coulee Water Plant Addition

This is to certify that all concrete masonry units manufactured for the above referenced project meet ASTM designation C-90 Grade N Type 1 hollow load bearing concrete masonry unit specifications.

General Contractor
Ed Boland Construction

Masonry Contractor
Cooper Construction
Great Falls, MT

Sincerely,

Kim James Fagenstrom

Kim James Fagenstrom

SUMMIT
BRICK COMPANY

Phone: 303.592.7080

Fax: 303.629.9316

7576 West 5th Avenue
Lakewood, CO 80226

SEC. 04300 UNIT MASONRY
2.0 - MATERIALS
2.2 - FACE BRICK

September 11, 2014

Forzley Sales
Paul McClure
1169 Stillwater Road
Nye, MT 59601

RE: Sand Coulee Water Pump Station
Brick Certification

MASON CONTRACTOR: Cooper Masonry

To Whom It May Concern:

This is to certify that Summit Brick Company's 625 Dark Gray Grain Modular Brick from the Lakewood Plant, selected for this project, will meet and/or exceed ASTM C-216-13, Type FBS, Grade SW Specifications.

Thank you for allowing us to assist you with this project. If there is anything else you need, please let me know.

Sincerely,
Jim Welte
Jim Welte
Distributor Sales

JW:sbh
Attachments

LAKEWOOD BRICK

CLEMSON UNIVERSITY
THE BISHOP MATERIALS LABORATORY

THE BISHOP MATERIALS LABORATORY

100 Clemson Research Blvd.
Anderson, SC 29625
(864) 656-1094
Fax: (864) 656-1095
www.bishopmaterialslab.com

AASHTO R18 ACCREDITED LABORATORY

Results of Tests on Brick conducted in accordance with ASTM C67-11 Standard Method for Sampling and Testing Brick and Structural Clay Tile

03/09/2012

Name:	Lakewood Brick & Tile Company 1325 Jay Street Lakewood, CO 80214-2096	Plant:	Lakewood Brick & Tile Company
		Report Number:	LAKE-0002
Phone:	303-238-5313	Sampled Date:	02/08/2012
Fax:	303-237-7737	Lot:	
		Product Code:	

Sample Description: **Red (400)**

Red (400): includes: Adamello (All Textures), Antique, Apache, Bamboo (All Textures), Belcaro, Blake Street, Brownstone, Burgundy (All Textures), Cherry Creek, Chestnut Brown, Cork (All Textures), Country Club, Espresso (All Textures), Frontier, Garden Blend (All Textures), Graphite (All Textures), Harvest Brown, Highlands, Iron Mountain, Ivy League (All textures), Landmark, Lodo, Lunar Brown (All Textures), Market Street (All Textures), Medium Red (All Textures), Old Denver, Old Sanford, Old Style, Onyx (All Textures), Pink (All Textures), Plum (All Textures), Red (All Textures), Regency Gold (All Textures), Sheffield (All Textures), Sheffield (All Textures), Sienna (All Textures), Timberline, Valley Forge, Wellshire, Yorktown

Absorption	1	2	3	4	5	Average	Test Date
24 Hour Submersion in Cold Water (%)	5.31	5.44	5.40	5.53	5.60	5.46	02/13/2012
5 Hour Submersion in Boiling Water (%)	8.23	8.20	8.19	8.20	8.22	8.21	
Saturation Coefficient (Ratio of 24H to 5H)	0.65	0.66	0.66	0.67	0.68	0.66	
Compressive Strength	1	2	3	4	5	Average	
psi	10,354	10,874	11,967	10,481	11,735	11,082	02/14/2012
MPa	71.4	75.0	82.5	72.3	80.9	76.4	
Efflorescence	11	12	13	14	15		
	Not Efflorescd	Not Efflorescd	Not Efflorescd	Not Efflorescd	Not Efflorescd		02/29/2012
IRA	6	7	8	9	10	Average	
g/min/30 in.²	21.0	20.6	19.9	21.6	18.2	20.3	02/15/2012
Average % Void	21.9						02/14/2012

The brick represented by the test results shown here comply with the standards listed below:

ASTM C 216 - 11 Standard Specification for Facing Brick (Solid Masonry Units Made From Clay or Shale)
Grade: SW, MW

John Sanders, Ph.D., PE, Director

Gary W. Parker, Laboratory Supervisor

Lab Reference: 4272.6041

Multi-Wythe Adjustable Systems

SEC. 04300
UNIT MASONRY
2.4 - MASONRY ACCESSORIES
A. - DUR-O-EYE JOINT REINFORCING

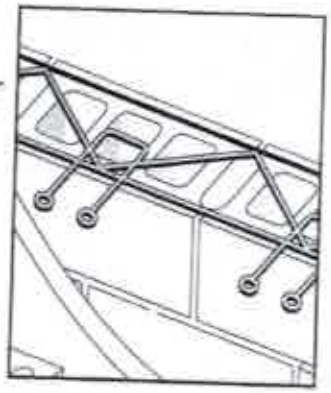

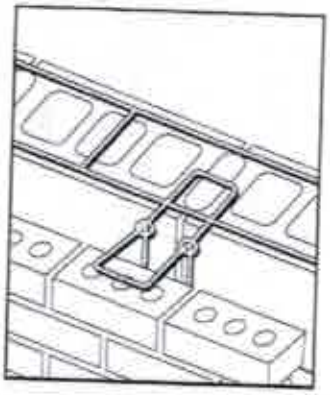

COOPER CONST. INC.
406 NINETEENTH ST. S.W.
GREAT FALLS, MT 59404

DUR-O-WAL MULTIWYTHE ADJUSTABLE SYSTEMS
DA3700 DUR-O-EYE AND DA3600 LADUR-EYE

Function: Prefabricated reinforcement designed for embedment in the horizontal mortar joints of masonry walls in either DA3700 Dur-O-Eye or DA3600 Ladur-Eye types

Basic Uses:
- Provides same uses as single wythe walls
- Ties multiwythe masonry walls
- Welded eyes on the side rods of the Truss design DA3700 Dur-O-Eye or Ladur design DA3600 Ladur-Eye engage pintles to tie the wythes with adjustability between wythes

Dimensions:
- Out-to-out spacing of deformed side rods is approximately 2 inches (50mm) less than the nominal thickness of the backing and the overall width of the assembly should be such that the engaged pintles extend at least 1-1/2 inches (38mm) into the outer wythe
- Maximum play between Pintle engaged in Eye is 1/16 inch (2mm)
- Pintle leg allows for a misalignment of 1-1/4 inches (30mm)
- Standard length is 10 feet (3050mm) with the Eyes welded at 16 inches (400mm) on center

Wire Gages:
- Standard Weight 9 gage (3.7mm) Side Rods and 9 gage (3.7mm) Cross Rods
- Extra Heavy Weight 3/16 inch (5mm) Side rod and 9 gage (3.7mm) Cross Rods
- Super Heavy Weight 3/16 inch (5mm) Side rods and 3/16 inch (0.187 or 5mm) Cross Rods
- Eyes and Pintles are fabricated from 3/16 inch (5mm) wire

Finishes:
- Brite Basic, Mill Galvanized, Class Coated Hot Dip Galvanized and Stainless Steel
- DUR-O-WAL recommends Mill Galvanized for Interior applications, (not glass block)
- DUR-O-WAL recommends Hot Dip Galvanized for all Exterior applications, including glass block masonry and where Mean Relative Humidity exceeds 75%
- Multiwythe walls are considered exterior applications and should be Stainless Steel or Hot Dip Galvanized
- Always check local building codes for requirements

Advantages: Tests show continuous reinforcement improves masonry wall performance by providing
- Crack control
- Greater elasticity
- Butt-welded, single plane construction
- High bond with the deformed side rods
- Better resistance to rain penetration
- Increased horizontal flexural strength

Special Notes:
- Prefabricated Corners and Tees are available and measure 32 inches (810mm) x 32 inches (810mm) and Corners must be designated as Outside or Inside Corners
- Pintles can be installed either up or down
- 2-1/2" maximum misalignment between courses which will meet the code requirements
- These same guidelines apply to DUR-O-WAL's In Line Ladur-Eye to utilize its advantages

Moisture Control Products

SEC. 04300 CONCRETE MASONRY
2.4 - MASONRY ACCESSORIES
FLASHING — WEEP TUBES

DA1510 TERMINATION BAR

Function: Designed to attach flashing to a backing.
Dimensions: 1/8 inch (3mm) thick x 1 1/2 inch (38mm) wide x 8 feet (2440mm) lengths with holes at 8 inches (200mm) on center
Finishes: Stainless Steel
Special Notes: Hole size is 5/16 inch (8mm) diameter

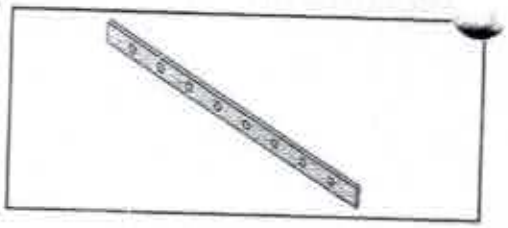

DA1540 POLY-BARRIER THRU-WALL FLASHING

Function: Designed as thru-wall flashing for masonry walls.
Dimensions: 50 feet (15.2M) rolls in 40 mil (32 mil rubberized asphalt plus 8 mil polyethylene film) available in 12 inch (300mm), 16 inch (406mm), 18 inch (457mm), 24 inch (600mm) and 36 inch (915mm) width
Special Notes:
- Self-sealing, self-healing, fully-adhered composite flexible flashing
- Recommend Drip Edge Stainless Steel Flashing be used

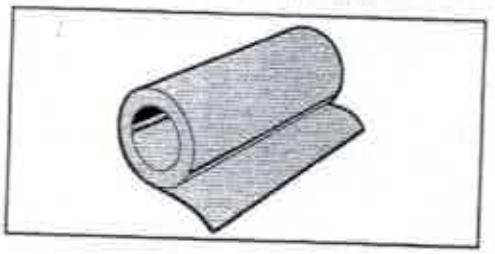

DA1544 DUR-O-BARRIER THRU-WALL FLASHING

Function: Designed as thru-wall flashing for masonry walls.
Dimensions: 75 feet (22.8M) rolls in 44 mil (32 mil rubberized asphalt plus 12 mil polyethylene sheet) available in 12 inch (300mm), 18 inch (457mm), 24 inch (600mm) and 36 inch (915mm) width
Special Notes:
- Self-sealing, self-healing, fully-adhered composite flexible flashing
- Recommend Drip Edge Stainless Steel Flashing be used

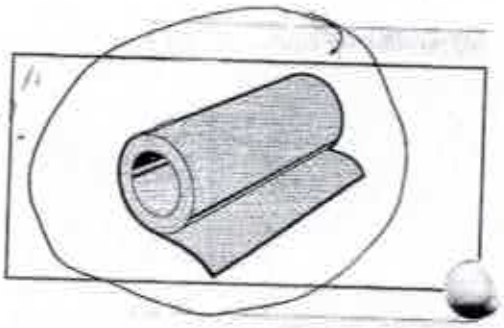

DA1525 DRIP EDGE FLASHING

Function: Designed as a moisture barrier to use with thru-flashing such as DCF Flashing, Copper Flashing, Dur-O-Barrier and Poly Barrier.
Dimensions: 26 gage (0.45mm) x 8 feet (2440mm) lengths x 1-1/2 inch (38mm) wide with 3/8 inch (10mm) closed hemmed edge
Finishes: [redacted] GALV.
Special Notes: Full Drip Edge wide enough to bridge the length of the horizontal leg of the lintel or shelf angle is available with hemmed edge only.

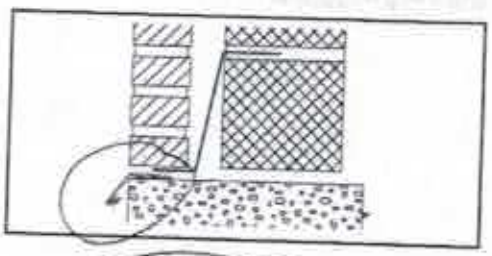

DA1005 WEEP HOLES OR TUBES

Function: Designed to be placed in head joints to allow the moisture to exit air cavity.
Dimensions: 3/8 inch (10mm) outside diameter in 4 inch (100mm) and 8 inch (200mm) lengths of clear plastic
Special Notes:
- Weep holes are subject to clogging with mortar droppings, silt and bugs
- Recommend cavity contain mortar dropping control devices

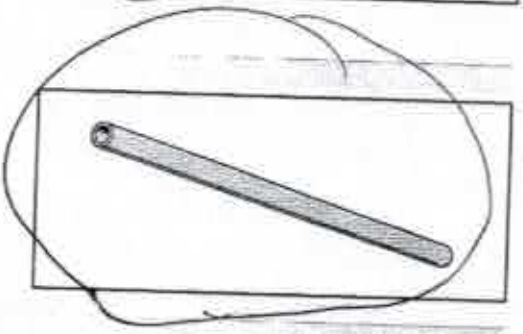

DA1006 CELL VENTS

Function: Designed to be placed in head joints in flashing course to weep and vent the cavity.
Dimensions: Standard 3/8 inch x 2-1/2 inches x 3-3/8 inches (10mm x 64mm x 85mm)
Jumbo 3/8 inch x 3-5/8 inches x 3-5/8 inches (10mm x 92mm x 92mm)
Special Notes:
- Available in Clear (Transparent), Almond, Gray, Cocoa, Brown and Stone Gray colors
- Recommend cavity contain mortar dropping control devices

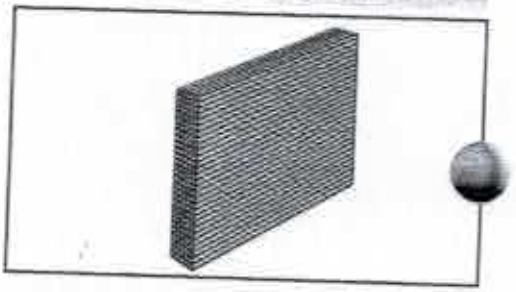

REPORT OF GROUT TEST

Thomas, Dean & Hoskins
1800 River Drive North, Great Falls, MT 59401
Report Date: 9/3/14

Project Number: 14-082-060 Charter
Project: Charter Bldg. 2100 S 21st Ave Great Falls
Client: Ascent, LLC
Address: 2350 Ball Drive
St. Louis, MO 63146
Attn: Bryan Bajier

Report Number: 4162

PROPOSED GROUT MIX
SAND COULEE WATER STATION
SEC. 04300 – UNIT MASONRY
2.4 – MASONRY ACCESSORIES

FIELD TEST CONDITIONS AND RESULTS 2.8-GROUT MIXES

Date Placed: 8/6/2014
Time Sampled: 11:10 AM
Location of Sample: Walls to 13'
Supplier: GFRM
Truck Number: 71
Mix Number: NP
Time Batched: 9:58 AM
Slump: 9.0"
Grout Temp: 84 F
Water Added:
Curing and Handling Notes:
Type of Masonry Units Used to Mold Specimens: Cardboard
Number of Units Used:

Time Placed: 11:00 AM

Ticket Number: 092138
Design Strength: 2000
Batch Size: 6.5cy – 7½ SACK MIX 3/8 MINUS
Air Content: NP
Ambient Temp: 84 F

Technician: JS

LABORATORY TEST RESULTS

Specimen	Test Date	Age	Load	Side 1	Side 2	Height	Area	Strength	Corrected Strength	Percent of Design
4162-A	8/13/2014	7	35935	3.52	3.40	6.42	11.97	3000		
4162-B	9/3/2014	28	42860	3.37	3.33	6.36	11.22	3820		191%
4162-C	9/3/2014	28	44310	3.52	3.41	6.45	12.00	3690		185%
4162-D	9/3/2014	28	43085	3.40	3.41	6.42	11.59	3720		186%

Average Strength: 3740

Remarks:

Copies to:

Reported by: Peter Klevberg
Peter Klevberg, P.E.
Laboratory Manager

Central Premix Concrete Products, an Oldcastle Company

SEC. 04300 UNIT MASONRY
2.4 - MASONRY ACCESSORIES
2.7 - MORTAR MIXES

Date: 9/4/14

Project: SAND COULEE WATER STATION

General Contractor: ED BOLAND CONSTRUCTION

Masonry Contractor: COOPER CONSTRUCTION MASONRY CONTR.

To whom it may concern;

Amerimix and Type "S" Mortar Mix, produced by Central Pre-Mix Concrete Products Co., in 3000 lb. or 80lb., bags meets the American Society for Testing and Materials (A.S.T.M.) C-270 Table 2 Property specifications and International Building Codes (i.B.C. 2003) 2103.7, Table 2 Property specifications.

Attached are additional data and component certifications for the appropriate type of mortar for the attached referenced project.

Please be aware that A.S.T.M. and U.B.C. strength requirements are referencing laboratory prepared mortar only, and therefore the strength requirements in Table 2 cannot be used as requirements for field tested mortar.

If you have any questions regarding the submittals please contact me at 509-926-8235

Respectfully Submitted,

CENTRAL PREMIX CONCRETE PRODUCTS

Brent Hostetler
Sales Manager

BH/agh

SEC. 04200 UNIT MASONRY
2.4 - MASONRY ACCESSORIES
2.7 - MORTOR MIXES

FORM CTR-1

CENTRAL PRE-MIX CONCRETE PRODUCTS CO.

COMPRESSION TEST REPORT

16310 East Marietta Spokane, Washington 99216 (509)926-8235

Report Date: 12/6/2013
Project: Mortar For Unit Masonry
Contractor: CPM Prod. Co.
Location of Placement: Lab
Type of Placement: 2x4 Cyl.
Mix #: Type-S
Required Strength: 1800 @ 28 Days
Admixture:
Plant: Spokane
Sand:
Water Added: 19%
Unit Weight 122

Cement Brand: Ashgrove
Cement Type: I-II
Cast Made By: Ray
Pass 200 Screen: 28%
Flow: 109
Air: 6%

CYLINDER #	AGE DAYS	DATE RECEIVED	DATE TESTED	CYLINDER WEIGHT	TOTAL LOAD	UNIT LOAD P.S.I.
747	7	10/15	10/20	.9	4670	1780
748	7	10/15	10/20	.9	4670	1780
749	14	10/15	10/27	.9	5790	2220
750	14	10/15	10/27	.9	5870	2240
751	28	10/15	11/10	.9	6770	2590
752	28	10/15	11/10	.9	6720	2570

REMARKS:

/ . ;

SIGNED: *Ray Foehringer*
Ray Foehringer

TITLE: Q.C. Technician

DAYTON SUPERIOR

SEC. 04300 – UNIT MASONRY
2.3 – MASONRY FINISH

WEATHER WORKER™ WB (J-26-WB)

PENETRATING WATER BASED SILOXANE WATER REPELLENT V.O.C. COMPLIANT.

PRODUCT DESCRIPTION

Weather Worker WB is a water based emulsion of siloxane (7% or 10% solids) that penetrates into concrete or masonry to provide long term weatherproofing protection. Weather Worker WB is a single component product that is ready-to-use, dilution prior to application is not required.

Weather Worker WB penetrates the substrate, and chemically reacts with, and bonds to, the concrete or masonry surface. The invisible film formed by Weather Worker WB will "bead" water and protect the substrate many times longer than conventional coatings.

PURPOSE

Weather Worker WB provides outstanding long term weatherproof protection for all types of concrete and masonry surfaces. Aside from its ability to "bead" water, it allows the substrate to "breathe" with its moisture vapor permeability.

Weather Worker WB Protects All Types of Structures

- Cast-in-Place Concrete
- Precast and Prestressed Concrete
- Exposed Aggregate Concrete
- Porous and Dense Brick
- Concrete and Split-Face Block
- Stucco
- Sandstone and Slate

Weather Worker WB Prevents or Inhibits

- Moisture Penetration
- Attack by Deicing Salts (Chloride Ions)
- Corrosion of Steel Reinforcements
- Attack by Airborne Industrial Chemicals
- Spalling Caused by Freeze-Thaw Cycles
- Efflorescence

ADVANTAGES

- Water based, low odor
- V.O.C. Compliant
- Protection against deicing salts and chloride ions
- Excellent beading for improved aesthetics
- Will not change the traction or skid resistance of a surface
- No color change, if applied properly
- Strong chemical bond to the substrate
- Excellent vapor transmission
- Excellent alkali resistance
- Extended warranties are available with Weather Worker WB. For details call Dayton Superior.

SPECIFICATIONS

- Active Content: 7% or 10% Water based Oligomerous Alkylalkoxy Siloxane
- Water Penetration Through Masonry ASTM E-514 (10% Siloxane) (With Stimulated Wind Driven Rain At 62.5 mph 100.6 kph) Average Reduction In Leakage Rate - 83%
- N.C.H.R.P. Report 244 (10% Siloxane) Series 2 - 77% Reduction In Chloride Ion Content
- Vapor Transmission - Excellent - No moisture retained after 21 days.

APPLICATION INSTRUCTIONS

Preparation

New concrete must be cured a minimum of 28 days. Use a wet burlap cure or cure with Dayton Superior Day-Chem Sil-Cure (J-13). Other curing compounds may not be compatible and will have to be removed. Tuckpointing must cure a minimum of 3 days and caulking should be fully cured before application. Concrete surfaces should be cleaned and free of dirt, oil, grease and other contaminants. New concrete surfaces may only require sweeping, however, if construction traffic has been excessive, washing with 2,000 psi (14 MPa) pressure cold water may be necessary. On older concrete surfaces, sandblasting or high pressure cold water of sufficient pressure may be used.

Chemical cleaning or high pressure hot water may also be used. Rinse thoroughly after chemical cleaning. For masonry surfaces, use chemical cleaners and/or lower pressure 500-1500 psi (3.4-10.3 MPa) cold water cleaning.

The surface pores must be opened up sufficiently to allow immediate penetration of Weather Worker WB. A good test is to place a few drops of Weather Worker WB onto the clean surface. Weather Worker WB should be immediately absorbed into the surface or additional cleaning may be necessary.

Installation

Before application, the surface should be completely dry. Allow at least 24 hours with sunshine for drying if the surface was wet. Do not apply below 40°F (4°C) or above 100°F (38°C) temperature. Do not apply if rain is expected within 3 hours. Do not apply during very windy conditions. High winds could cause an excessive application rate.

Refer to www.daytonsuperior.com for latest Technical Data Sheet and MSDS
7777 Washington Village Dr., Suite 130, Dayton OH 45459
Customer Service: (888) 977-9600
Technical Assistance: (866) 329-8724

Sep. 11. 2014 1:09PM DAYTONSUPERIOR No. 7930 P.

WEATHER WORKER™ WB (J-26-WB)

CONTINUED

Cover and protect all glass, aluminum, metal, grass, shrubs, plants, and vegetation from overspray of Weather Worker WB. Agitate Weather Worker WB before spraying.

Apply a single application of Weather Worker WB with low pressure spray equipment (15 psi or .1 MPa) roller or broom. Use a fan spray nozzle for greatest efficiency, mist spraying will only waste material. On vertical surfaces, apply the material from the bottom of the wall upwards so that it will run down the surface at least 6 inches (15 cm) below the spray pattern. For porous vertical substrates or for maximum protection, apply two "wet on wet" applications of Weather Worker WB.

On horizontal surfaces, material should be sufficiently applied to completely flood the surface, approximately 125 FT²/gal. (3 M²/L) depending on the porosity of the surface. Typically, the surface can be reopened to traffic in 1-2 hrs. if the temperature is 72°F (22°C) or above. Opened containers of Weather Worker WB should be tightly resealed when not in use. The full chemical reaction of the siloxane will take 3 days.

APPROXIMATE COVERAGE

	FT² per Gallon	M² per Liter
Clay Brick	100-150	2.5-3.7
Concrete Cast in-Place	80-150	2.0-3.7
Precast	125-150	3.0-3.7
Exposed Aggregate	100-150	2.5-3-7
Stucco	100-150	2.5-3.7
Rough Stone	100-150	2.5-3.7
Smooth Stone	150-175	3.7-4.3
Glazed Brick	150-175	3.7-4.3
Concrete Block	60-90	1.5-2.3

DRYING TIME

The milky white colored product will dry to a clear, transparent film in 1-2 hrs. at 70°F (21°C).

PACKAGING

55 gal.(208L) drums, 5 gal.(18.9L) pails and 1 gal. (3.8L) cans.

CLEAN UP

Equipment - Use clean soapy water.

LIMITATIONS

Always test each substrate with an application of Weather Worker WB to a minimum of 3' x 3' (.9 x .9 m) area to check for performance, water repellency and to verify the cleaning procedure. Do not apply to a wet surface. The shelf life for an unopened container is one year. Keep containers tightly sealed when not in use. Store in a dry location with a temperature range between 40°F (4°C) and 100°F (38°C).

WARNING

- Use with adequate ventilation
- Keep out of the reach of children
- Do not take internally
- In case of ingestion, CALL A PHYSICIAN immediately.
  DO NOT induce vomiting

If splashed in the eyes, flush thoroughly with clean water for a minimum of 15 minutes. CALL A PHYSICIAN immediately. May cause irritation to the skin. If brought into contact with the skin, wash thoroughly with soap and water. Reseal container after each use. Wear protective clothing, gloves, and goggles. Read MSDS before using product.

MANUFACTURER

Dayton Superior Corporation
7777 Washington Village Dr., Ste. 130
Dayton, OH 45459
Customer Service: 888-977-9600
Technical Services: 866-329-8724
Website: www.daytonsuperior.com

WARRANTY

Dayton Superior Corporation ("Dayton") warrants for 12 months from the date of manufacture or for the duration of the published product shelf life, whichever is less, that at the time of shipment by Dayton, the product is free of manufacturing defects and conforms to Dayton's product properties in force on the date of acceptance by Dayton of the order. Dayton shall only be liable under this warranty if the product has been applied, used, and stored in accordance with Dayton's instructions, especially surface preparation and installation, in force on the date of acceptance by Dayton of the order. The purchaser must examine the product, when received and promptly notify Dayton in writing of any non-conformity before the product is used and no later than 30 days after such non-conformity is first discovered. If Dayton, in its sole discretion, determines that the product breached the above warranty, it will, in its sole discretion, replace the non-conforming product, refund the purchase price or issue a credit in the amount of the purchase price. This is the sole and exclusive remedy for breach of this warranty. Only a Dayton officer is authorized to modify this warranty. The information in this data sheet supersedes all other sales information received by the customer during the sales process. THE FOREGOING WARRANTY SHALL BE EXCLUSIVE AND IN LIEU OF ANY OTHER WARRANTIES, EXPRESS OR IMPLIED, INCLUDING WARRANTIES OF MERCHANTABILITY AND FITNESS FOR A PARTICULAR PURPOSE, AND ALL OTHER WARRANTIES OTHERWISE ARISING BY OPERATION OF LAW, COURSE OF DEALING, CUSTOM, TRADE OR OTHERWISE

LIMITATION OF LIABILITY

Dayton shall not be liable in contract or in tort (including, without limitation, negligence, strict liability or otherwise) for loss of sales, revenues or profits; cost of capital or funds; business interruption or cost of downtime, loss of use, damage to or loss of use of other property (real or personal); failure to realize expected savings; frustration of economic or business expectations; claims by third parties (other than for bodily injury), or economic losses of any kind; or for any special, incidental, indirect, consequential, punitive or exemplary damages arising in any way out of the performance of, or failure to perform, its obligations under any contract for sale of product, even if Dayton could foresee or has been advised of the possibility of such damages. The Parties expressly agree that these limitations on damages are allocations of risk constituting, in part, the consideration for this contract, and also that such limitations shall survive the determination of any court of competent jurisdiction that any remedy provided in these terms or available at law fails of its essential purpose.

DAYTON SUPERIOR

SEC. 07200 — INSULATION
2" FOAMULAR 250

Product Data Sheet

FOAMULAR® 250

Rigid Foam Insulation

All-purpose foam panel insulation for masonry and other applications.

Owens Corning FOAMULAR 250 extruded polystyrene insulation is ideal for wall furring, perimeter/ foundation, cavity wall, crawlspace, pre-cast concrete, under slab, roofing systems, sheathing and other applications. Owens Corning's patented Hydrovac™ process technology make the unique closed-cell structure of FOAMULAR insulation highly resistant to moisture, retaining its long term R-value* year after year – even following prolonged exposure to water leakage, condensation, groundwater and freeze/ thaw cycling.

Performance Benefits

- High R-value (R-5 per inch of product thickness)*
- Compressive strength of 25 psi.
- Effective resistance against moisture, mildew, corrosion and rot.
- Ease of handling and installation (lightweight, tough, rigid foam panels)
- Easy to saw, cut and score
- Wide selection of sizes and thicknesses.
- Availability in straight, tongue and groove, or scored square edges
- Compliance with building codes and standards.

Product Applications

Superior Insulation Performance for a Wide Variety of Building Requirements

High-performance FOAMULAR 250 works to:

- Retard the transmission of water vapor and moisture in masonry walls, helping prevent structural damage.
- Provides insulation in a metal or wood furring system used for masonry or concrete walls.
- Perform below grade in perimeter and foundation applications, or directly beneath the concrete slab to complement the insulating sheathing envelope around the building framing.

Resistant to common soils and decay, Owens Corning FOAMULAR retains its insulating performance characteristics even after prolonged exposure to moisture.

Technical Information

- FOAMULAR insulation is ideal for all buildings under normal temperature conditions, but should not be used in contact with chimneys, heater vents, steam pipes or other surfaces where temperatures exceed 165 °F. It is not recommended for applications where sustained temperatures exceed 150 °F.
- All construction should be evaluated for the necessity to provide vapor retarders. See current ASHRAE Handbook of Fundamentals.
- FOAMULAR insulation is a non-structural material and must be installed on framings which are independently structurally adequate to meet required construction and service loading conditions.

*The higher the R-value, the greater the insulating power. Ask your seller for the test report on FOAMULAR.

FOAMULAR 250 Rigid Foam Insulation

Product Data

FOAMULAR Insulation Product – 250 (25psi)[1]

Material Extruded polystyrene closed-cell foam panel with continuous skins on face and back surfaces

Thicknesses[1] (in)	Width x Length[2] (in)	Edges
1, 1½, 2, 2½, 3	16 x 96	Square
¾, 1, 1½, 2, 2½, 3, 3½, 4	24 x 96	Square
¾, 1, 1½, 2, 2½, 3	48 x 96	Square
¾, 1	48 x 108	Square
¾, 1, 1½, 2, 2½, 3	48 x 96	Scored Square
¾, 1, 1½, 2	24 x 96	T&G[4]
¾, 1, 1½, 2	48 x 96	T&G[4]
¾, 1	48 x 108	T&G[4]

Weight 150 lb/1,000 ft² for 1" thickness

Packaging Shipped in units with two stretch-wrap bands per bundle, with an additional exterior wrap

(1) "R" per inch 5.0 (at 75°F mean temperature). (2) Other sizes available on request. Consult your local Owens Corning representative for availability. (3) Compression strength, minimum (specification) value (lb/in²). (4) Tongue-and-groove edge reduces air infiltration.

Physical Properties[1]

Property	ASTM Method[2]	FOAMULAR 250
Thermal conductivity – "k"[3] [Btu x in/ft² x hr x °F max] @ 75°F mean temperature @ 40°F mean temperature	C518	0.20 0.18
Thermal resistance – "R", minimum (°F x ft² x h/Btu) at 75°F mean temperature at 40°F mean temperature	C518	5.0 5.4
Compressive strength, Minimum (lb/in²)[4]	D1621	25.0
Flexural strength (lb/in² min)[5]	C203	75
Water absorption (% by volume max)[6]	C272	0.10
Water vapor permeance (perm max)[7]	E96	1.1
Water affinity	–	hydrophobic
Water capillarity	–	none
Dimensional stability (% linear change max)[8]	D2126	2.0
Linear coefficient of thermal expansion (in/in/°F max)	–	2.7x10⁻⁵
Flame spread[9,10]	E84	5
Smoke developed[9,10,11]	E84	45-175
Oxygen index min[9]	D2863	24
Service temperature max (°F) 165		
ASTM C578 (type) IV		

(1) Properties shown are representative values for 1" thick material based upon most recent product quality audit data. (2) Modified as required to meet ASTM C578. (3) Thermal resistance (R) – [illegible] of a 1" thickness of 5.0 (at 75°F mean temperature), 5.4 (at 40°F). (4) Value at yield or 10% deflection, whichever occurs first. (5) Value at yield or 5%, whichever occurs first. (6) Data ranges from 0.00 to value shown due to the level of precision of the test method. (7) Actual value [illegible] decreases as thickness increases. (8) Data ranges from 0.0 to value shown. (9) These laboratory tests are not intended to describe the hazard presented by this material under actual fire conditions. (10) Data from Underwriters Laboratories, Inc. classified. See Classification Certificate U-197. (11) ASTM E84 is thickness-dependent, therefore a range of values is given.

Standards and Codes Compliance

- Recognized by code authorities under Research Reports BOCA 98-24; ICBO 3628; SBCCI PST & ESI 9727A
- Meets HUD/FHA Use of Materials Bulletin No. 71a and ASTM C 578 Type IV
- Underwriters Laboratories Inc.® Classification Certificate U-197
- Thermal resistance (R-value): 5.0 at 75 °F, 5.4 at 40 °F mean temperature per 1" thickness (hr x ft² x °F/Btu)

Caution

This product will ignite if exposed to fire of sufficient heat and intensity. This product should be installed only with a gypsum board on the interior side of the wall. During shipping, storage, installation and use, this product should not be exposed to open flame or other ignition sources.

Note

All products described here may not be available in all geographic markets. Consult your local sales office representative for more information.

FOAMULAR insulation is produced by Owens Corning's patented HYDROVAC® process technology.

For more information on the Owens Corning family of home building products, contact your Owens Corning dealer, call 1-800-GET-PINK or access our Web site: www.owenscorning.com

OWENS CORNING

INNOVATIONS FOR LIVING™

OWENS CORNING WORLD HEADQUARTERS
ONE OWENS CORNING PARKWAY
TOLEDO, OHIO 43659

[illegible] is a registered trademark of Owens Corning
The [illegible] is a registered trademark of Owens Corning
[illegible] are trademarks of Owens Corning

[illegible] Printed in U.S.A. November 2003 Copyright © 2003 Owens Corning

Metal Roofing Systems Color Availability

UNA-CLAD™ ROOFING PANEL COLOR SELECTION GUIDE

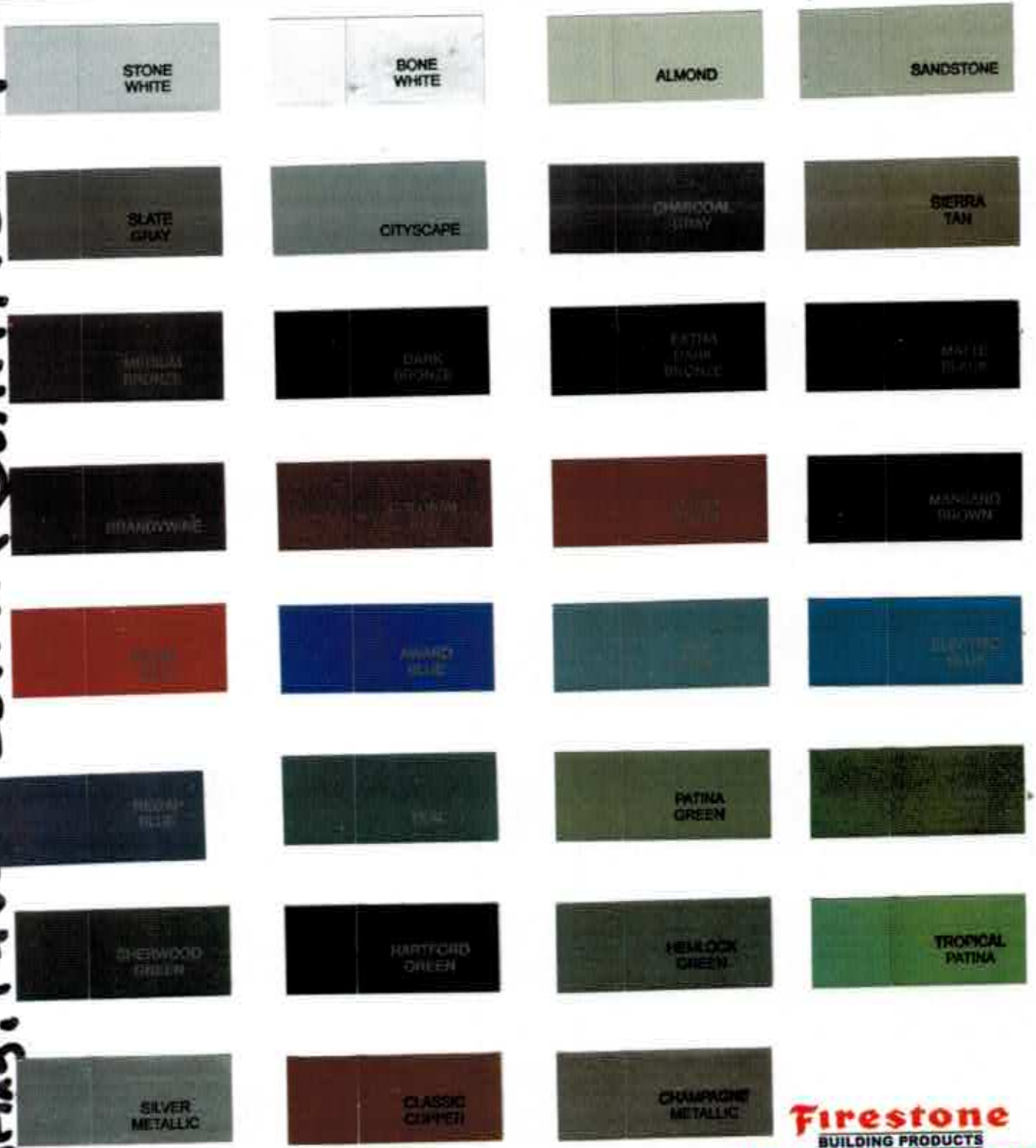

Firestone
BUILDING PRODUCTS
NOBODY COVERS YOU BETTER

Colors shown are as close to actual painted steel as allowed by the printing process. Contact your local sales rep for actual metal samples.

Color Selection Guide

soffit only

PVDF FINISH	R	E	SRI	STEEL[1] 26	STEEL[1] 24	STEEL[1] 22	STEEL[2] 24	ALUMINUM .032	ALUMINUM .040	ALUMINUM .050	ALUMINUM .063
Almond ○◊	0.57	0.86	67		♦	♦		♦	♦	♦	♦
Bone White ○◊	0.72	0.84	87	♦	♦	♦	♦	♦	♦	♦	♦
Brandywine ○	0.25	0.85	23		♦	♦		♦	♦	♦	
Charcoal Gray ○◊	0.29	0.84	28	♦	♦	♦	♦	♦	♦		
Cityscape ○◊	0.35	0.85	37	♦	♦	♦		♦	♦	♦	
Colonial Red ○◊	0.31	0.84	31	♦	♦	♦	♦	♦	♦	♦	
Dark Bronze ○	0.26	0.84	24	♦	♦	♦	♦	♦	♦	♦	♦
Dark Ivy ○	0.25	0.83	22	♦	♦	♦		♦	♦		
Extra Dark Bronze	0.06	0.87	0		♦	♦		♦	♦	♦	
Hartford Green	0.10	0.82	2	♦	♦	♦	♦	♦	♦	♦	
Hemlock Green ○◊	0.32	0.86	33		♦	♦			♦	♦	
Mansard Brown ○◊	0.30	0.85	30	♦	♦	♦	♦	♦	♦	♦	
Matte Black ○◊	0.25	0.86	24	♦	♦	♦		♦	♦	♦	♦
Medium Bronze ○◊	0.30	0.87	31	♦	♦	♦	♦	♦	♦	♦	♦
Patina Green ○◊	0.26	0.86	25		♦			♦	♦	♦	
Regal Blue	0.16	0.86	12		♦	♦		♦	♦	♦	
Regal Red ○◊	0.42	0.84	46	♦	♦	♦		♦	♦	♦	
Sandstone ○◊	0.51	0.85	58	♦	♦	♦	♦	♦	♦	♦	♦
Sherwood Green ○◊	0.27	0.85	26	♦	♦	♦	♦	♦	♦	♦	
Sierra Tan ○	0.35	0.86	37	♦	♦	♦	♦	♦	♦	♦	♦
Sky Blue ○◊	0.29	0.85	29		♦			♦		♦	
Slate Gray ○◊	0.36	0.86	38	♦	♦	♦	♦	♦	♦	♦	
Stone White ○◊	0.57	0.86	67	♦	♦	♦	♦	♦	♦	♦	♦
Teal	0.13	0.85	7		♦	♦			♦		
Terra Cotta ○◊	0.34	0.87	36	♦	♦	♦		♦	♦	♦	
Tropical Patina ○	0.28	0.85	27		♦				♦		
Award Blue ★	0.15	0.84	9		♦				♦		
Electric Blue ★	0.20	0.84	16		♦				♦		
Champagne Metallic ○★	0.37	0.83	38		♦	♦			♦		
Classic Copper ○◊★	0.42	0.86	46		♦				♦		
Silver Metallic ○◊★	0.59	0.77	67		♦	♦		♦	♦	♦	♦

Contact your local sales representative for specific stocking information. Not all colors and gauges are stocked in all locations.
Due to product improvements, changes and other factors, we reserve the right to change or delete information herein without prior notice.

New 35-Year Warranty available for all finishes

LEGEND

Steel Types:

[1] G-90 Galvanized Steel
[2] AZ-50 Galvalume® Steel

Cool Roofing Information:
R– Initial Solar Reflectance
E– Initial Emissivity
SRI–Solar Reflective Index

○ – Energy Star® qualified products

◊ – CRRC -listed finish

★ - Premium Color

NOTES

- *All paint finishes are high quality PVDF (Kynar 500® / Hylar 5000®) colors.*
- *Custom colors are available.*
- *Copper, zinc, stainless steel, anodized and mill finish aluminum are also available.*
- *Protective film must be removed immediately after installation.*

PLANT LOCATIONS

Minnesota
Georgia
Nevada
Michigan

Galvalume® is a registered trademark of BIEC International, Inc.

Kynar 500® is a registered trademark of Arkema, Inc.

Hylar 5000® s a registered trademark of Solvay Solexis, Inc.

CRRC CHARTER MEMBER

ENERGY STAR

For more information, contact your local Sales Rep or visit FIRESTONEBPCO.COM.

FIRESTONE BUILDING PRODUCTS
250 WEST 96TH ST., INDIANAPOLIS, IN 46260
CORPORATE OFFICE: (800) 428-4442 • (317) 575-7000

/FirestoneBuildingProducts @FirestoneBPCo

Firestone BUILDING PRODUCTS
NOBODY COVERS YOU BETTER.™

Item #MP1185 01/14

LAST-TIME
CUSTOM-BILT METALS

TITAN® STANDING SEAM METAL ROOFING PANEL

SL-100

ENERGY EFFICIENCY WITH STYLE & DURABILITY

CUSTOM-BILT METALS

LAST-TIME® Brand Products
Since 1972

SL-100 | TITAN® STANDING SEAM PANEL

CUSTOM-BILT METALS

	Seam Height	Standard Panel Widths	Minimum Slope	Curved Panel Option	Seam Sealant Option	Weather Tightness Warranty Available	Spaced Purlin Application	RATED UL 580 Class 90	TESTED ASTM E-1592	TESTED ASTM E 1680 & 1646
CB-2000 Mechanical Seam	2 inch	14", 18"	½" in 12"	●	●	●	●	●	●	●
CB-150 Mechanical Seam	1 ½"	12", 16"	1" in 12"	●	●	●	●	●	●	●
CB-100 Mechanical Seam	1 inch	12", 17"	1" in 12"	○	○	○	○	○	○	○
SL-1750 Snap Lock	1 ¾"	14", 18"	3" in 12"	○	●	●	●	●	●	●
SL-100 Snap Lock	1 inch	12", 16"	3" in 12"	○	○	○	○	○	●	○
SLZ-1000 Snap Lock	1 inch	13", 17"	3" in 12"	○	○	○	○	○	●	○
CS-100 Cap Seam	1 inch	14 ½", 18 ½"	3" in 12"	●	○	○	○	●	○	●
WS-100 Wall & Soffit	1 inch	12"	NA	○	○	○	●	NA	NA	○

● YES ○ NO

Product availability varies in each location.

MATERIALS:

Prefinished or Bare Zincalume/Galvalume or G-90 Galvanized Steel in 24 & 26 gauge
Copper 16oz. or 20oz (non-standard)
Prefinished Aluminum in .032 Thickness.

PAINT AND COLOR:

Titan Cool Roof Reflective Paint utilizing BASF and Kynar 500 technology in 25 colors. See architectural color selection chart, and request an actual metal sample for final paint and color selection.

SPECIFICATIONS:

Self-locking standing seams 1" high with a panel width of 12" or 16" (Other widths available as non-standard).

RECOMMENED OPTIONS:

Stiffening ribs or striations

SL-100 AFTER LOCKING

COMPARE PANEL FEATURES

CLASSIC STYLING

LAST TIME DURABILITY:

TITAN COOL-ROOF

CUSTOM-BILT METALS LOCATIONS

Kent, WA	Phoenix, AZ	New Orleans, LA
Chino, CA	Hayward, CA	San Jose, CA
W. Sacramento, CA	Spokane, WA	Emporia, KS
Portland, OR	Honolulu, HI	Memphis, TN

CALL 1-800-826-7813
for the closest sales representative.

UC-500 Flush Panel System

UC500-INFO

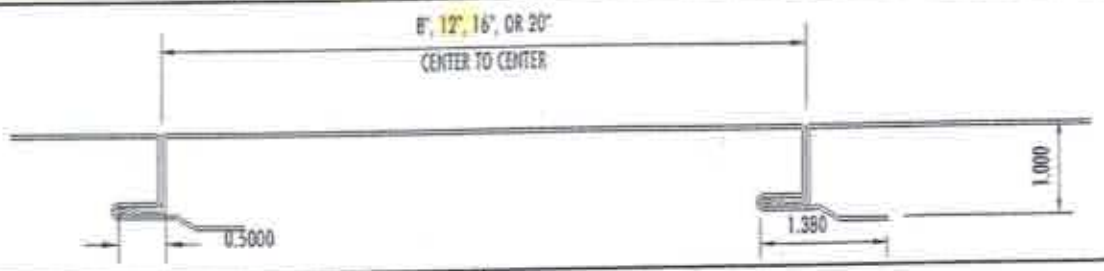

MATERIAL OPTIONS

RHEINZINK
COIL-COATED STEEL
COIL-COATED ALUMINUM
ARCHITECTURAL GRADE SHEET COPPER
ANODIZED ALUMINUM
MILL FINISH ALUMINUM

FABRICATION OPTIONS

RHEINZINK	.7 & .8 MM
STEEL	26 - 22 GAUGE 24
ALUMINUM	.032" - .040"
COPPER	16 & 20 OZ.
MINIMUM LENGTH	24"
MAXIMUM LENGTH	48'
BEST O.C. DIMS.	8", 12", 16", & 20"
VENTING AVAILABLE	
STIFFENING RIBS AVAILABLE	

TECHNICAL DATA

ASTM E330-90 STRUCTURAL PERFORMANCE TESTING
ASTM E283 AIR INFILTRATION TEST
ASTM E331 WATER PENETRATION TEST

FINISH OPTIONS

PAINTING
HYLAR 5000/KYNAR 500, MODIFIED POLYESTERS, AND OTHER CUSTOM OR EXOTIC FINISHES CAN BE COIL COATED OR SPRAY APPLIED.

ANODIZING
CLEARS, BRONZES, AND VARIOUS OTHER COLORS CAN BE COIL ANODIZED FOR COLOR CONSISTENCY.

MECHANICAL FINISHES
PROVIDES A SURFACE TEXTURE BY MECHANICAL MEANS ALONE. (3) EMBOSSING PATTERNS ARE CURRENTLY AVAILABLE.

CUSTOM COLORS
WE CAN PROVIDE FULL CUSTOM COLOR SERVICES TO MATCH PRACTICALLY ANY MATERIAL, SHADE, OR TINT YOU REQUEST.

OPTIONAL VENTING PATTERN

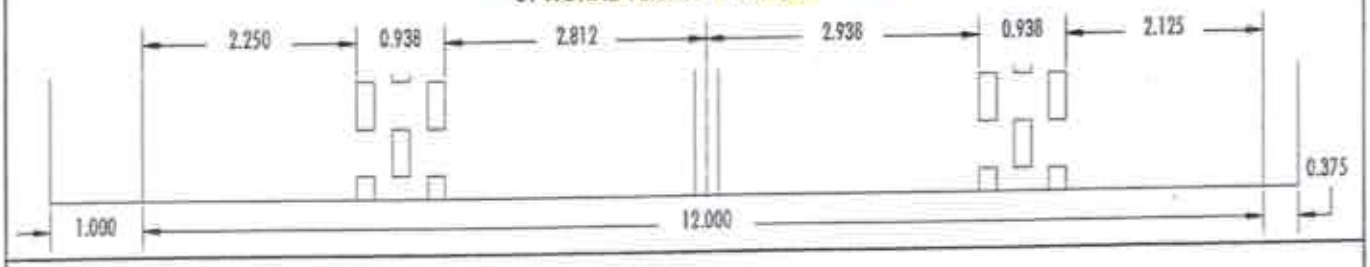

NOTES:

1. HEAVIER GAUGES, NARROWER WIDTHS, AND EMBOSSING MINIMIZE "OIL CANNING."
2. OIL CANNING IS NOT A CAUSE FOR REJECTION.
3. AN EXTENSIVE SELECTION OF ASSOCIATED PANEL FLASHINGS AND TRIMS ARE AVAILABLE.
4. CONTACT UNACLAD FOR UP-TO-DATE TECHNICAL INFORMATION AND MATERIAL LIMITATIONS.
5. ALL SYSTEMS WITH TESTING MUST BE INSTALLED IN ACCORDANCE WITH THE ASSEMBLY AS TESTED.

Copyright © 4.14.06 by Firestone Metal Products/UNA-CLAD

1001 Lund Boulevard, Anoka, Minnesota 55303 800 / 426-7737 763 / 576-9595 FAX 763 / 576-9596

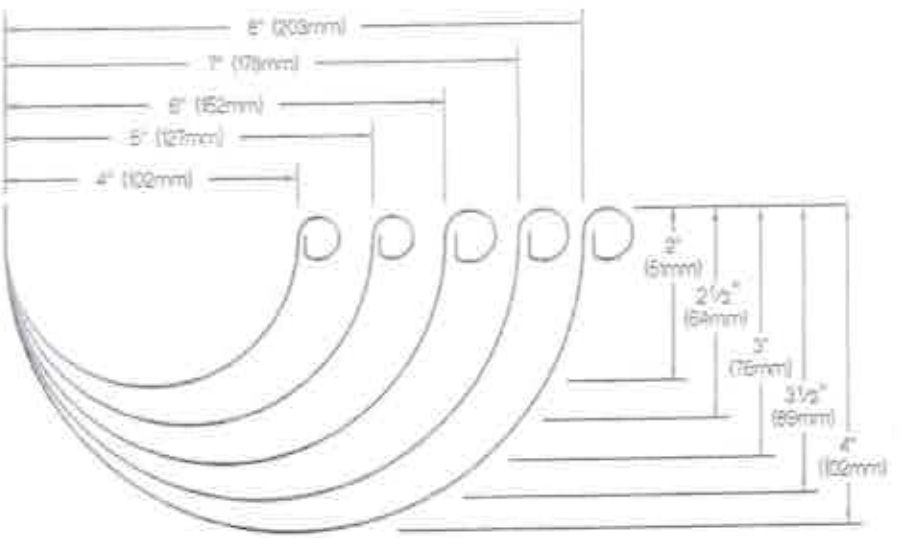

FIG 1-3A

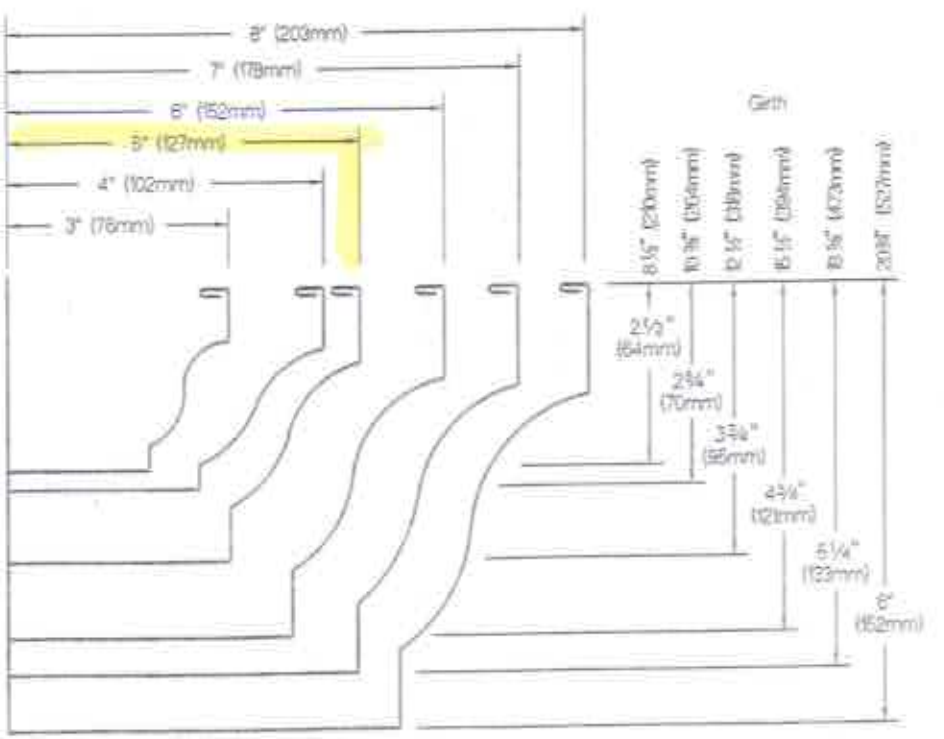

FIG 1-3B

MANUFACTURED HALF ROUND & OGEE GUTTER

FIGURE 1-3

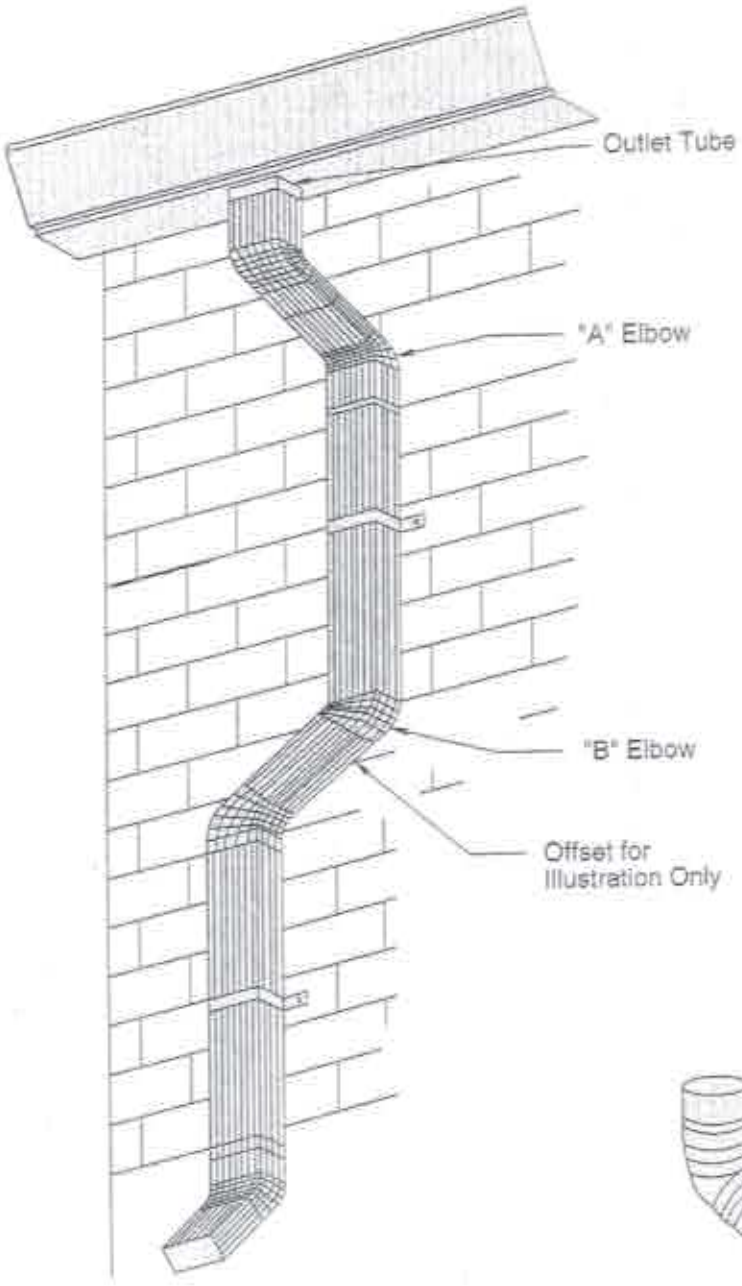

FIG 1-31A

3" x 4"

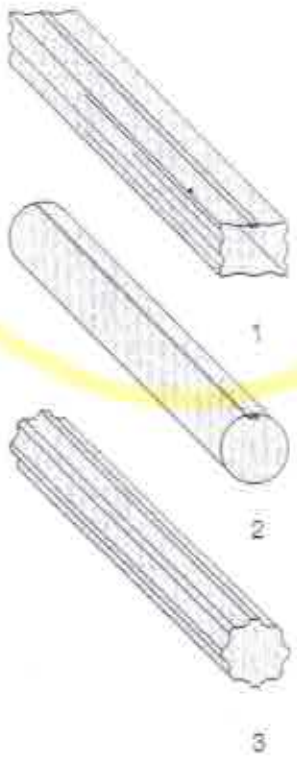

DOWNSPOUTS
FIG 1-31B

ELBOWS
FIG 1-31C

3" x 4"
DOWNSPOUTS-MANUFACTURED

FIGURE 1-31

Sikaflex® -15 LM

ISO 9000

High-performance, Low-modulus elastomeric sealant

DESCRIPTION

Sikaflex-15 LM is a low-modulus, high-performance, 1-component, polyurethane-based, non-sag elastomeric sealant. Meets Federal Specification TT-S-00230C, Type II, Class A; ASTM C-920, Type S, Grade NS, Class 25; Federal Specification for silicones - TT-S-001543 A, Type non-sag.

WHERE TO USE

- Designed for joints where maximum depth of sealant will not exceed ½ in.
- Excellent for moving joints in vertical applications.
- Suitable for use between similar as well as dissimilar materials.
- Typical applications include joints in panel and wall systems, around window and door frames, reglets, flashing, etc.
- Exceptional sealant choice for high-rise and curtain-wall applications where high movement capability is required.

ADVANTAGES

- Low modulus of elasticity.
- Easy and ready to use.
- Eliminates time, effort, waste, and equipment clean-up.
- Cures to a durable, flexible consistency.
- Exceptional cut and tear resistance.
- Stress relaxation.
- Excellent adhesion.
- Bonds to most construction materials without a primer.
- Long life.
- Excellent resistance to aging, weathering.
- Proven in tough climates around the world.
- Paintable with water-, oil-, and rubber-based paints.
- Non-leaching.
- Jet fuel resistant.
- Capable of +100% / -50% joint movement.
- Two-hour UL fire rating.

COVERAGE

10.3 fl. oz. cartridge seals 12.4 lineal ft. of ½ in. x ¼ in. joint.
20 fl. oz. uni-pac sausage seals 24 lineal ft. of ½ in. x ¼ in. joint.

PACKAGING

Disposable 10.3 fl. oz., moisture-proof composite cartridges, 24/case; and uni-pac sausages 20 fl. oz., 20/case. Available on special order: 5 gal. pails, 55 gal. drums.

HOW TO USE

SURFACE PREPARATION

Clean all surfaces. Joint walls must be sound, clean, dry, frost-free, and free of oil and grease. Curing compound residues and any other foreign matters must be thoroughly removed. Install bond breaker tape or backer rod to prevent bond at base of joint.

PRIMING

Priming is typically not necessary. Most substrates only require priming if testing indicates a need or where sealant will be subjected to water immersion after cure. Consult Sikaflex Primer Technical Data Sheet or Technical Service for complete information as to primer requirements.

TYPICAL DATA FOR SIKAFLEX-15 LM
(Material and curing conditions: 73F (23C) and 50% R.H.)

COLORS	White, colonial white, aluminum gray, limestone, black, dark bronze, capitol tan. Special architectural colors on request.	
SHELF LIFE	10.3 fl. oz. cartridges	12 months
	20 fl. oz. uni-pac sausages	12 months
	5 gal. pails	4 months
	55 gal. drums	4 months
STORAGE CONDITIONS	Store at 40-95 F. **Condition material to 65-85F before using.**	
APPLICATION TEMPERATURE	40 to 100 F. Sealant should be installed when joint is at mid-range of its anticipated movement.	
SERVICE RANGE	-40 to 170 F	
CURING RATE	Tack-free time	6 to 8 hours (TT-S-00230C)
	Tack-free to touch	3 hours
	Final cure	7 to 10 days
RECOVERY	>90%	
SHORE A HARDNESS (ASTM D-2240)		
21 day	20 ± 5	
TENSILE PROPERTIES (ASTM D-412)		
21 day	Tensile Stress	125 psi
	Elongation at Break	700%
	Modulus of Elasticity 25%	20 psi
	50%	35 psi
	100%	50 psi

ADHESION IN PEEL (TT-S-00230C)

Substrate	Peel Strength	Adhesion Loss
Aluminum	25 lb	0%
Glass	25 lb	0%
Concrete	30 lb	0%

WEATHERING RESISTANCE	Excellent
CHEMICAL RESISTANCE	Good resistance to water, diluted acids, diluted alkalines, and residential sewage.Consult Technical Service for specific data.

APPLICATION

Recommended application temperatures, 40-100 F. For cold-weather applications, pre-conditioning units to approximately 70 F is recommended. Only apply sealant to clean, sound, dry, and frost-free substrates.

Sikaflex-15 LM should be applied into joints when joint slot is at mid-point of its designed expansion and contraction.

Place nozzle of gun into bottom of the joint filling entire joint. Keep nozzle in the sealant, and continue on with a steady flow of sealant preceding the nozzle to avoid air entrapment.

Avoid overlapping of sealant to eliminate entrapment of air.

Tool as required.

Roadway Joints - Sikaflex-15 LM should be recessed in the joint a minimum of ¼ in. from the surface. Joint dimension should allow for ¼ in. minimum and ½ in. maximum thickness for sealant. Proper design is 2:1 width to depth ratio.

LIMITATIONS

- Allow 1-week cure at standard conditions when using Sikaflex-15 LM in total water immersion situations and prior to painting.
- Avoid exposure to high levels of chlorine. (Maximum level is 5ppm of chlorine.)
- Maximum depth of sealant must not exceed ½ in.; minimum depth is ¼ in.
- Do not cure in the presence of curing silicone sealants.
- Avoid contact with alcohol, and other solvent cleaners, during cure.
- Do not apply when moisture-vapor-transmission condition exists from the substrate, as this can cause bubbling within the sealant.
- Use opened cartridges and uni-pac sausages the same day.
- When applying sealant, avoid air-entrapment.
- Since system is moisture-cured, permit sufficient exposure to air.
- White color tends to yellow slightly when exposed to ultra-violet rays.
- The ultimate performance of Sikaflex-15 LM depends on good joint design and proper application. With joint surfaces properly prepared and sealed, movement of +100% -50% can be tolerated.

CAUTION

COMBUSTIBLE

Keep away from open flames and high heat. Contains xylene; avoid breathing vapors. Use with adequate ventilation.

IRRITANT

Avoid skin and eye contact. Use of NIOSH/MSHA approved organic vapor respirator, safety goggles, and chemical-resistant gloves recommended. Remove contaminated clothing and shoes.

FIRST AID

In case of skin contact, wash thoroughly with soap and water. For eye contact, flush immediately with plenty of water for at least 15 minutes; contact physician. Wash clothing before re-use. Discard contaminated shoes.

CLEAN UP

Uncured material can be removed with approved solvent. Cured material can only be removed mechanically. For spillage, collect, absorb, and dispose of in accordance with current, applicable local, state, and federal regulations.

Drawer 41, PC 440. Sika and Sikaflex are registered trademarks. Made in USA. Printed in USA. April, 1995.

KEEP CONTAINER TIGHTLY CLOSED
KEEP OUT OF REACH OF CHILDREN
NOT FOR INTERNAL CONSUMPTION
FOR INDUSTRIAL USE ONLY
CONSULT MATERIAL SAFETY DATA SHEET FOR MORE INFORMATION

SIKA WARRANTS ITS PRODUCTS TO BE FREE OF MANUFACTURING DEFECTS AND THAT THEY WILL MEET SIKA'S CURRENT PUBLISHED PHYSICAL PROPERTIES WHEN APPLIED IN ACCORDANCE WITH SIKA'S DIRECTIONS AND TESTED IN ACCORDANCE WITH ASTM AND SIKA STANDARDS. THERE ARE NO OTHER WARRANTIES BY SIKA OF ANY NATURE WHATSOEVER, EXPRESSED OR IMPLIED, INCLUDING ANY WARRANTY OF MERCHANTABILITY OR FITNESS FOR A PARTICULAR PURPOSE IN CONNECTION WITH THIS PRODUCT. SIKA CORPORATION SHALL NOT BE LIABLE FOR DAMAGE S OF ANY SORT, INCLUDING REMOTE OR CONSEQUENTIAL DAMAGES, RESULTING FROM ANY CLAIMED BREACH OF ANY WARRANTY, WHETHER EXPRESSED OR IMPLIED, INCLUDING ANY WARRANTY OF MERCHANTABILITY OR FITNESS FOR A PARTICULAR PURPOSE OR FROM ANY OTHER CAUSE WHATSOEVER. SIKA SHALL ALSO NOT BE RESPONSIBLE FOR USE OF THIS PRODUCT IN A MANNER TO INFRINGE ON ANY PATENT HELD BY OTHERS.

1-800-933-SIKA NATIONWIDE
Regional Information and Sales Centers
For the location of your nearest Sika sales office, contact your regional center.

Northeast
201 Polito Avenue
Lyndhurst, NJ 07071
Phone: 1-800-933-7452
Fax: 201-804-1020

Midwest
2190 Gladstone Court
Suite A
Glendale Heights, IL 60139
Phone: 708-924-7900
Fax: 708-924-8508

Southern
3778 La Vista Road
Suite 100
Tucker, GA 30084
Phone: 404-315-0337
Fax: 404-315-0117

Western
12767 East Imperial Hwy
Santa Fe Springs, CA 90670
Phone: 310-941-0231
Fax: 310-941-4762

TMG SERVICES *Quality Products - Excellent Service*

3216 E. Portland Avenue
Tacoma, WA 98404
253-779-4160
tmginc@tmgservices.net

August 29th, 2014

Ed Boland Construction
4701 North Star Blvd.
Great Falls, MT 59405

Reference: Sand Coulee, MT

The enclosed documents are submitted for your approval for the equipment being provided for the above referenced project.

SECTION 11730 SUBMERSIBLE MIXER

SCOPE OF SUPPLY - EQUIPMENT	Units	Included
Mixer Wet Assembly (PWM 100-70) ● Includes lowering cable ● Rubber foot mount ● Two wires for connecting to AC power ● On/Off switch with integrated light w/ scada interface		Yes
PAX Mixer Operation & Maintenance Manual		Yes
Shipping & Handling for Mixer	1	Included
Conduit Installation (by Utility)	1	BY OTHERS

1. Start-up and operator training provided by TMG. PAX will provide start-up checklist.
2. If Utility is tax exempt they must submit Tax Exempt certificate.

Terms & Conditions of Sale:
-F.O.B.: JOBSITE
-Payment Terms: Net 30 Days – Our terms of payment are 100% payable 30 days after shipment. Since this is an agreement between Buyer and Seller, and Seller has no relationship with the third party owner, this agreement must be independent of any third party action or inaction. Payment will be due as indicated above without a dependency on the buyer being paid by the owner, with no further restriction or impediments, and regardless of any payment arrangement that may exist between contractor and owner.
-This price is in effect for 60 days.
-Submittals, if required, will be provided 2 weeks after receipt of all technical data at T M G Services.
-Delivery will be made in approximately 6 weeks after receipt of order and/or approvals and resolution of all necessary technical data at T M G Services.
-Quotation prices do not include any sales taxes or any other taxes that may apply.
-This quotation is limited to the products and/or services as listed and excludes any item or service not specifically listed.

If you have any questions or need further information please let me know. TMG Services, Inc. and I look forward to working with you.

Sincerely,

Delane Hand
TMG Services, Inc.

ANY TANK. ANY SIZE.™

PAX Water Mixer (PWM100) Product Specifications

Active Vortex Mixer for Small Water Tanks

- Most powerful mixer in its class
- Easy install, self-righting design
- Prevents ice formation
- Eliminates thermal stratification
- Improves disinfectant residual levels
- Lowers DBPs and nitrifying bacteria
- 3-year warranty

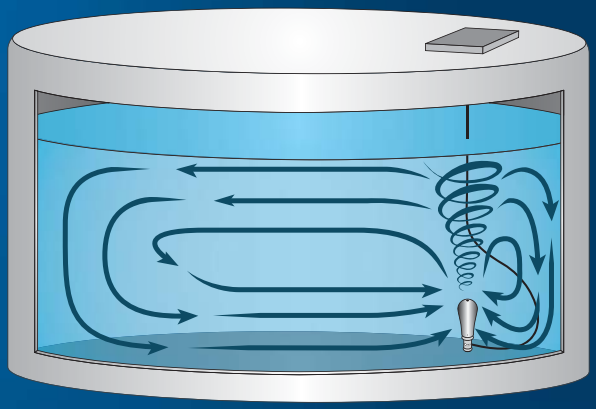

PAX Water Mixer vigorously circulates the entire tank volume.

Find out how a PAX Water Mixer can help you.
Call our Water Quality Specialists today at **1-866-729-6493**
or visit **www.paxwater.com**

PAX WATER TECHNOLOGIES™

ANY TANK. ANY SIZE.™

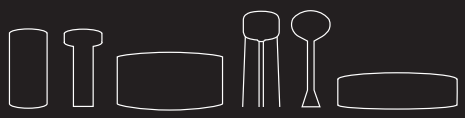

PAX Water Mixer (PWM100) Product Specifications

The PAX Water Mixer (PWM100) is an active vortex mixer for small water storage tanks. Patented PAX technology provides the most powerful small tank mixing to thoroughly circulate the entire tank volume. The mixer installs easily and self-rights at the bottom of a tank, even on a sloped floor.

SIDE VIEW

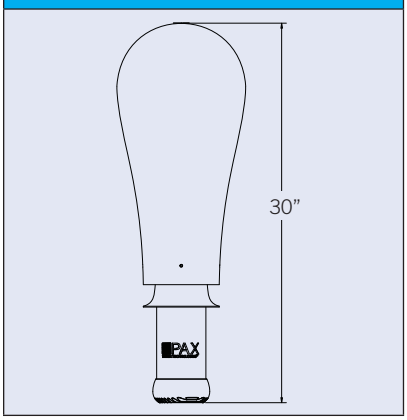

TOP VIEW

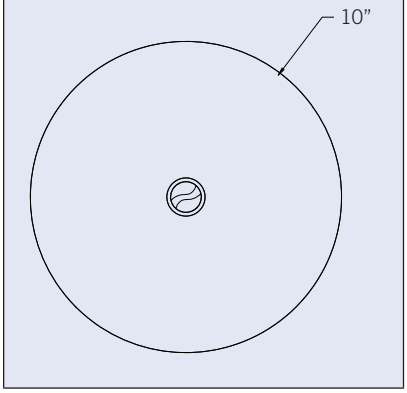

MIXER SPECIFICATIONS	
Power Supply Requirement	120 VAC, 60 Hz, GFCI-protected, 20 amp circuit
Customer Supplied Power Switch	3R fused, safety disconnect switch
Motor Type	115 VAC, 60 Hz, water-filled, water-lubricated
Nominal Power Draw	1.15 kVA (670 watts)
Footprint Diameter	10” (25.4 cm)
Height	30” (76.2 cm)
Weight	40 lbs (18.1 kg)
Material: Housing	316 stainless steel
Material: Motor Seals	Chlorine/chloramine-resistant NBR rubber
Material: Foot	Chlorine/chloramine-resistant EPDM rubber
Wiring	NSF 61 & UL-listed submersible pump cable 14 AWG (2.1 mm^2) XLPE

NSF
Certified to NSF/ANSI 61-G

Find out how a PAX Water Mixer can help you.
Call our Water Quality Specialists today at **1-866-729-6493**
or visit **www.paxwater.com**

PAX WATER TECHNOLOGIES™

1/2014 ©2013 PAX Water Technologies, Inc.

PAX
WATER TECHNOLOGIES™

PAX Water Mixer PWM100

SPECIFICATIONS

PAX Mixer Power Requirements (grid power):
120 VAC, GFCI-protected, 5mA trip, 20 amp circuit

Motor Specifications:
Water-filled, water-lubricated, maintenance-free brushless AC motor, carbon/ceramic thrust bearing construction. No electronics inside motor housing.

Maintenance:
Recommended maintenance is to replace motor proactively every five years.

WARRANTY

For the period of time beginning with date of Substantial Completion and ending on the time period listed below, the Product is warranted to be substantially free from defects in material and workmanship and to conform to Seller's specifications applicable to the Product –

- Three (3) years on all supplied parts
- One hundred and twenty (120) days on labor

Warranty does not cover damage due to: (i) lightning, flood or other acts of nature, or failure of or inappropriate application of peripheral devices including lightning or surge protectors; (ii) negligence of Buyer or any third party; (iii) vandalism or any other misuse or mistreatment of the product; or (iv) installation by non-licensed contractor. Lightning protection is recommended in areas historically prone to lightning AND is the responsibility of the Buyer for proper installation in accordance with local, state, and national code requirements.

No warranty is given for products or components manufactured by companies not affiliated by ownership with Seller, or for products which have been subject to misuse, corrosion, or which have been disassembled, moved, tampered, modified or repaired by persons not authorized by Seller. Seller must receive immediate written notice of any defect. Seller's liability is limited solely to the repair or replacement of any Product, including replacing any defective parts therein or, at Seller's option, refunding to Buyer the purchase price allocable to the nonconforming Product. If Seller determines fault has been caused by improper maintenance or use, or by abnormal conditions of operation, Seller may bill repairs at Seller's normal rates.
EXCEPT AS EXPRESSLY SET FORTH HEREIN, SELLER DISCLAIMS ALL WARRANTIES, EXPRESS, IMPLIED OR STATUTORY, SUCH AS WARRANTIES OF MERCHANTABILITY AND/OR FITNESS FOR A PARTICULAR PURPOSE. SELLER DISCLAIMS ALL WARRANTIES REGARDING ANY ANCILLARY SERVICES RENDERED, IF APPLICABLE.

860 HARBOUR WAY SOUTH
RICHMOND, CA 94804
PHONE 510-550-7100
FAX 510-550-7127
WEB www.paxwater.com
EMAIL info@paxwater.com

PAX Water Mixer (PWM100)

Installation/Operation Manual

PAX
WATER TECHNOLOGIES™

Notices

© PAX Water Technologies, Inc. 2013

WARNING: It is important that this manual be read in full prior to installation or maintenance of the PAX Water Mixer. No part of this manual may be reproduced in any form or by any means (including electronic storage and retrieval or translation into a foreign language) without prior agreement and written consent from PAX Water Technologies as governed by the United States and international copyright laws.

Manual Part Number
1101-7119-01

Edition
Revision B
October 2013
Printed in USA
PAX Water Technologies, Inc.
860 Harbour Way South, Suite C
Richmond, CA 94804
(866) 729-6493

Warranty

The material contained in this Installation/Operation Manual is provided “AS IS” and “WITH ALL FAULTS” and the user understands and agrees that all express and implied warranties, including those warranties implied by the Uniform Commercial Code as enacted in the state of California, United States or such other forum as may be agreed upon by PAX and the user, are excluded with regard to this manual and any information contained herein; and PAX and the user further exclude all other implied warranties of merchantability and fitness for a particular purpose with respect to this manual. The material provided in this manual is subject to change in future editions without notice to the user.

CONTENTS

1. Before You Begin 3

Hazard of Electrical Shock, Explosion or Arc Flash
Unintended Equipment Operation
Safety Warnings

2. Overview 4

PAX Water Mixer Description
Quality Control Statement

3. PAX Water Mixer Specifications 5

4. Installation Tools and Test Equipment 5

5. Facilities Requirements 6

6. Installation Procedure 7

Figure 1: PWM100 7

7. PAX Water Mixer Start-Up and Shut-Down Procedure 8

8. PAX Water Mixer Electrical Checks 9

9. Recommended Maintenance Checks 10

10. Replacement Parts List 10

 © 2013 PAX Water Technologies, Inc.

PAX WATER TECHNOLOGIES™

1. Before You Begin

Read and understand the following instructions before performing any procedure with this product. Failure to follow these instructions may result in death or serious injury.

HAZARD OF ELECTRIC SHOCK, EXPLOSION OR ARC FLASH

- Installation, adjustment, repair and maintenance must be performed by qualified personnel.
- The user is responsible for compliance with all international and national electrical code requirements with respect to grounding of all equipment.

UNINTENDED EQUIPMENT OPERATION

- No responsibility is assumed by PAX Water Technologies for any consequences arising out of the use of this product.
- Do not operate or install any equipment that appears damaged. Contact your PAX representative to resolve any damage issues.

SAFETY WARNINGS

This is the safety alert symbol and is used to alert potential personal injury hazards. Please obey all safety messages that follow this symbol to avoid personal injury or death.

WARNING indicates an imminently hazardous situation, which if not avoided, can result in death, serious injury or equipment damage.

- A confined space entry plan and operational procedures must be used for every reservoir entry. Refer to OSHA's confined space requirements at their website: **http://www.osha.gov** or your relevant local authority.
- Lifting tools and equipment are required during installation. Refer to OSHA's website for more information: **http://www.osha.gov** or your relevant local authority.
- Fall protection is a safety requirement for work performed on water tanks. Please refer to OSHA's website for fall protection safety requirements: **http://www.osha.gov** or your relevant local authority.
- Only licensed electrical contractors should attempt installation of the PAX Water Mixer.
- Avoid dropping construction materials or tools into water tanks so as to prevent damage to the tank's interior coating

 © 2013 PAX Water Technologies, Inc.

PAX WATER TECHNOLOGIES™

2. Overview

PAX WATER MIXER DESCRIPTION

The PAX Water Mixer (PWM100) is an active vortex mixer for small water storage tanks. Patented PAX technology provides the most powerful small tank mixing to thoroughly circulate the entire tank volume. The mixer installs easily and self-rights at the bottom of a tank, even on a sloped floor.

QUALITY CONTROL STATEMENT

PAX Water Technologies is dedicated to supplying high-quality products that meet or exceed the needs of water customers. PAX Water Technologies' strict quality control and continuous improvement programs ensure the best value to customers. PAX Water Technologies manages its business to the highest environmental and ethical standards.

NSF International provides testing and certification of water systems and components to ensure their safety for use in drinking water systems. Certification to the health effects requirements of NSF/ANSI Standard 61-G has been completed for these products which include all wetted components – including the entire frame, foot, motor, nozzle and power cable.

 © 2013 PAX Water Technologies, Inc.

3. PAX Water Mixer Specifications

Power Supply Required	120 VAC, 60 Hz, GFCI-protected, 20 amp circuit
Customer Supplied Power Switch	3R fused, safety disconnect switch
Motor Type	115 VAC, 60 Hz, water-filled, water-lubricated, single phase motor, NSF 61
RPM	3450
Nominal Power Draw	1.15 kVA (670 watts)
Footprint Diameter	10” (25.4 cm)
Height	30” (76.2 cm)
Weight	40 lbs (18.1 kg)
Material: Motor Housing	316 stainless steel
Material: Motor Seals	Chlorine/chloramine-resistant NBR rubber
Material: Foot	Chlorine/chloramine-resistant EPDM rubber
Wiring	NSF 61 & UL-listed submersible pump cable 14 AWG XLPE
Maximum Motor Wire Length	70' (21.3 m)

NOTE: Contact your PAX Representation if you have questions on maximum motor wire length.

4. Installation Tools and Test Equipment

1. Wire Stripper/Crimper
2. Diagonal Cutter, 6” (150 mm)
3. Multimeter (Fluke #179 or equivalent)
4. Current Clamp (Fluke #10005 or equivalent)

 © 2013 PAX Water Technologies, Inc.

PAX WATER TECHNOLOGIES™

5. Facilities Requirements

The following requirements must be provided at the installation site. This manual is not intended to cover the set-up of these facilities.

PWM100 ASSEMBLY	
REQUIREMENT	**DESCRIPTION**
Line Power	Dedicated 120 VAC, 60 Hz, single phase, 20 amp GFCI-protected circuit.
Safety Disconnect Switch	The safety disconnect switch must be a 3R certified type, properly marked and installed in accordance with all electrical codes, state, local and OSHA requirments.
Junction Box	3R located in accordance with local codes.
Electrical Conduit	The PAX Water Mixer cable is a 3 wire cable set, 0.5” (12.7 mm) in diameter. Use electrical conduit (3/4” or 20 mm) from the tank penetration to the junction box, and from the junction box to the safety disconnect switch.
Strain Relief	Designed for a 1.025” (26 mm) hole penetration and able to support 50 lbs (22.7 kg).
Power Indicator Light (Optional)	Contact your PAX representative for details.

 © 2013 PAX Water Technologies, Inc.

PAX WATER TECHNOLOGIES™

6. Installation Procedure

WARNING: The PAX Water Mixer should always run underwater, NEVER RUN DRY.

NOTE: All electrical and conduit connections should be secure and routed in accordance with electrical code.

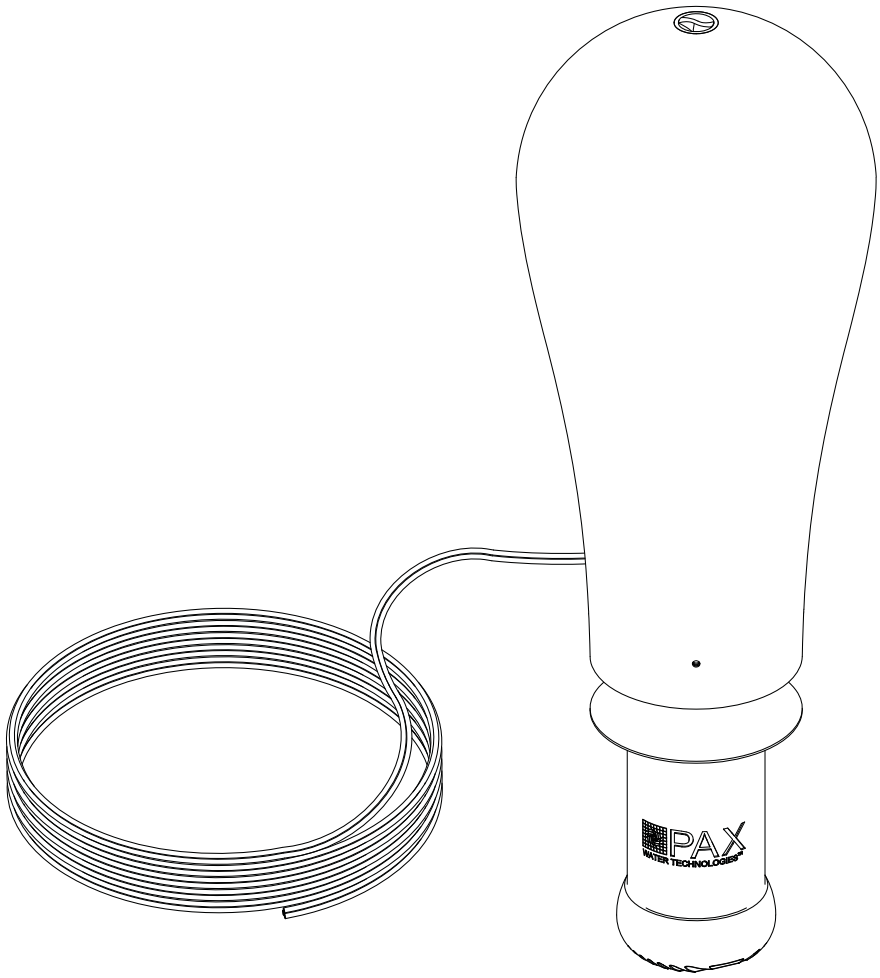

FIGURE 1

 © 2013 PAX Water Technologies, Inc.

PAX WATER TECHNOLOGIES™

1. Bring power (120 VAC, 60 Hz, GFCI-protected, 20 amp circuit) onsite to tank.
2. Install a safety disconnect switch (and optional power indicator light) and connect power.

NOTE: Make sure that the safety disconnect switch is in the off position; follow proper lockout/tagout procedures.

3. Penetrate the side of the tank hatch (1.025" or 26 mm hole).
4. Run conduit (3/4" or 20mm) from the safety disconnect switch to a junction box at the tank hatch, and then from the junction box to the penetration of the hatch lip. Pull wire from safety disconnect switch to the junction box (copper wires min. 12 AWG (3.31 mm^2), type THHN, rated 90 °C).
5. Bring the PAX Water Mixer to the roof of the tank.

NOTE: Keep PAX Water Mixer inside its packaging for protection. The holes on the sides of the packaging can be used to secure a rope.

6. Remove mixer from its packaging and tie off the power cord (halfway between mixer and end of cord) to ensure that mixer cannot fall off the top of the tank. Then thread the end of the power cord through a strain relief, the tank penetration and the conduit that connects to the junction box.
7. Hold the mixer over the open hatch by gripping its power cord and slowly lower into the water.
   a) Continue to lower the mixer, a few feet at a time, until it makes contact with the floor of the tank.
   b) After the mixer makes contact with the floor of the tank, allow 3-4 feet (1-1.5 m) of slack in the cable.
   c) If there is excess power cord, coil it up and secure it to the ladder above the water.

NOTE: The PAX Water Mixer is designed to come to rest on the floor of the tank and point upwards. On a sloped floor, the mixer will come to rest at a low point on the tank floor.

7. PAX Water Mixer Start-Up and Shut-Down Procedure

NOTE: After the initial installation or any tank maintenance, always perform the PAX electrical checks before placing the PAX Water Mixer in service.

Checks include:

- Measuring Motor Resistance and Ground
- Measuring AC Current
- Measuring AC Voltage

1. To turn the PAX Water Mixer ON, energize the GFCI breaker and turn ON the safety disconnect switch.
2. To turn the PAX Water Mixer OFF, turn off the safety disconnect switch and de-energize the GFCI breaker.

 © 2013 PAX Water Technologies, Inc.

PAX WATER TECHNOLOGIES™

8. PAX Water Mixer Electrical Checks

The major hazard associated with the PAX Water Mixer is danger of electrical shock when performing the electrical checks. Always use caution when working with high voltage.

Following the installation of all hardware, and after all electrical connections have been made, perform an electrical check and start the PAX Water Mixer, to make sure that PAX Water Mixer is operating properly. The electrical checks should be completed by a licensed electrical contractor.

Electrical Test Equipment

The following equipment is to be used to perform the electrical check.

- Multimeter
- Current Clamp

NOTE: Perform the measurements at a location in the circuit where you are able to place a clamp-on amperage meter and where you can take a voltage reading.

NOTE: Reference Table 1 for the next steps.

Table 1 Quick Reference Chart

#	WHAT TO MEASURE	READING MEASURED	NORMAL READING	MULTIMETER SYMBOL	TOOL FOR MEASURING
1	Wire resistance L1 to L2 (when powered down)		1.4 - 2.0 ohms	Ω	Multimeter (with probes)
2	Wire resistance L1 to Ground and L2 to Ground (when powered down)		>700K ohms	Ω	Multimeter (with probes)
3	AC input voltage		110 - 120 VAC	~	Multimeter (with probes)
4	AC current L1 to L2		9.5 – 11.5 amps AC	~	Multimeter (with clamp)

 © 2013 PAX Water Technologies, Inc.

PAX WATER TECHNOLOGIES™

Measuring Motor Resistance

1. Disconnect all power by placing the safety disconnect switch in the open position.
2. Lockout and tagout the safety disconnect switch.
3. Verify the motor resistance between motor wires by measuring between L1 and L2
   - The resistance should be between 1.4 - 2.0 ohms depending on the length of the cable.
4. Measure the motor resistance between L1 and L2 and motor ground.
   - The resistance should be between greater than 700K ohms.
5. If all the readings are within specification, then remove any lockout/tagouts and perform the PAX Water Mixer start-up.

Measuring AC Input Voltage

1. Power up the PAX Water Mixer.
2. Set the Multimeter to AC Volts. Place the probes across the incoming power.
   - Verify that the voltage is between 110 - 120 VAC.

Measuring AC Input Current

1. Power up the PAX Water Mixer.
2. Set the multimeter to AC amp.
3. Clamp the current meter to each of the input power wires.
   - Verify that the current is between 9.5 and 11.5 AC amps.

9. Recommended Maintenance Checks

NOTE: There is no preventative maintenance required for the PAX Water Mixer.

1. Perform the PAX Electrical Checks (Section 8) annually to ensure that the PAX Water Mixer is operating within specification.
2. Pull the PAX Water Mixer by its power cord up just below the surface of water (do not pull out of the water) to verify operation (water movement).
3. In the event that the PAX Water Mixer is not working, contact your PAX representation for technical support.
4. It is recommended that every five years, the PAX Water Mixer motor be replaced. Contact your PAX representative for details on the motor exchange program.

10. Replacement Parts List

The following is a replacement part number for the PAX Water Mixer.

DESCRIPTION	PART NO.	QUANTITY
Service Kit, PWM100 Mixer, Replacement-60'	PSK-1067	1
Service Kit, PWM100, Replacement-100'	PSK-1068	1

 © 2013 PAX Water Technologies, Inc.

PAX WATER TECHNOLOGIES™

PAX Water Technologies, Inc.
860 Harbour Way South, Suite C
Richmond, CA 94804

For sales and service, contact:
Phone: 866.729.6493
Email: service@paxwater.com
www.paxwater.com

PAX
WATER TECHNOLOGIES™

NSF International

RECOGNIZES

Pax Water Technologies

Facility: Richmond, CA

AS COMPLYING WITH NSF/ANSI 61 AND ALL APPLICABLE REQUIREMENTS.
PRODUCTS APPEARING IN THE NSF OFFICIAL LISTING ARE
AUTHORIZED TO BEAR THE NSF MARK.

http://www.nsf.org/Certified/PwsComponents/Listings.asp?Company=4L970&Standard=061&

NSF

ANSI
ANSI Accredited Program
PRODUCT CERTIFICATION
Certification Program
Accredited by the
American National
Standards Institute

Certification Program
Accredited by the
Standards Council
of Canada

This certificate is the property of NSF International and must be returned upon request. For the most current and complete information, please access NSF's website (www.nsf.org).

January 25, 2011
Certificate# C0069576 - 01

David Purkiss, General Manager
Water Distribution Systems

The Public Health and Safety Organization

NSF Product and Service Listings

These NSF Official Listings are current as of **Wednesday, February 26, 2014** at 12:15 a.m. Eastern Time. Please contact NSF International to confirm the status of any Listing, report errors, or make suggestions.

Alert: NSF is concerned about fraudulent downloading and manipulation of website text. Always confirm this information by clicking on the below link for the most accurate information: http://info.nsf.org/Certified/PwsComponents/Listings.asp?Company=4L970&Standard=061&

NSF/ANSI 61
Drinking Water System Components - Health Effects

NOTE: Unless otherwise indicated for Materials, Certification is only for the Water Contact Material shown in the Listing. Click here for a list of Abbreviations used in these Listings.

Pax Water Technologies

860 Harbour Way South
Richmond, CA 94804
United States
510-550-7100
Visit this company's website (http://www.paxwater.com)

Facility : Richmond, CA

Mechanical Devices

Trade Designation	Size	Water Contact Temp	Water Contact Material
Miscellaneous Process Devices/Components			
PAX Water Mixer PWM100[G]	[1]	CLD 23	MLTPL
PAX Water Mixer PWM200[G]	[2]	CLD 23	MLTPL
PAX Water Mixer PWM300[G]	[3]	CLD 23	MLTPL
PAX Water Mixer PWM400[G]	[3]	CLD 23	MLTPL
PAX Water Mixer PWM500[G]	[3]	CLD 23	MLTPL

[1] Certified for use in tanks 25,000 gallons or greater.
[2] Certified for use in tanks 50,000 gallons or greater.
[3] Certified for use in tanks with a volume of 100,000 gallons or greater.
[G] Product is Certified to NSF/ANSI 372 and conforms with the lead content requirements for

"lead free" plumbing as defined by California, Vermont, Maryland, and Louisiana state laws and the U.S. Safe Drinking Water Act.

Number of matching Manufacturers is 1

Number of matching Products is 5

Processing time was 1 seconds

Moisture-Density Test Report

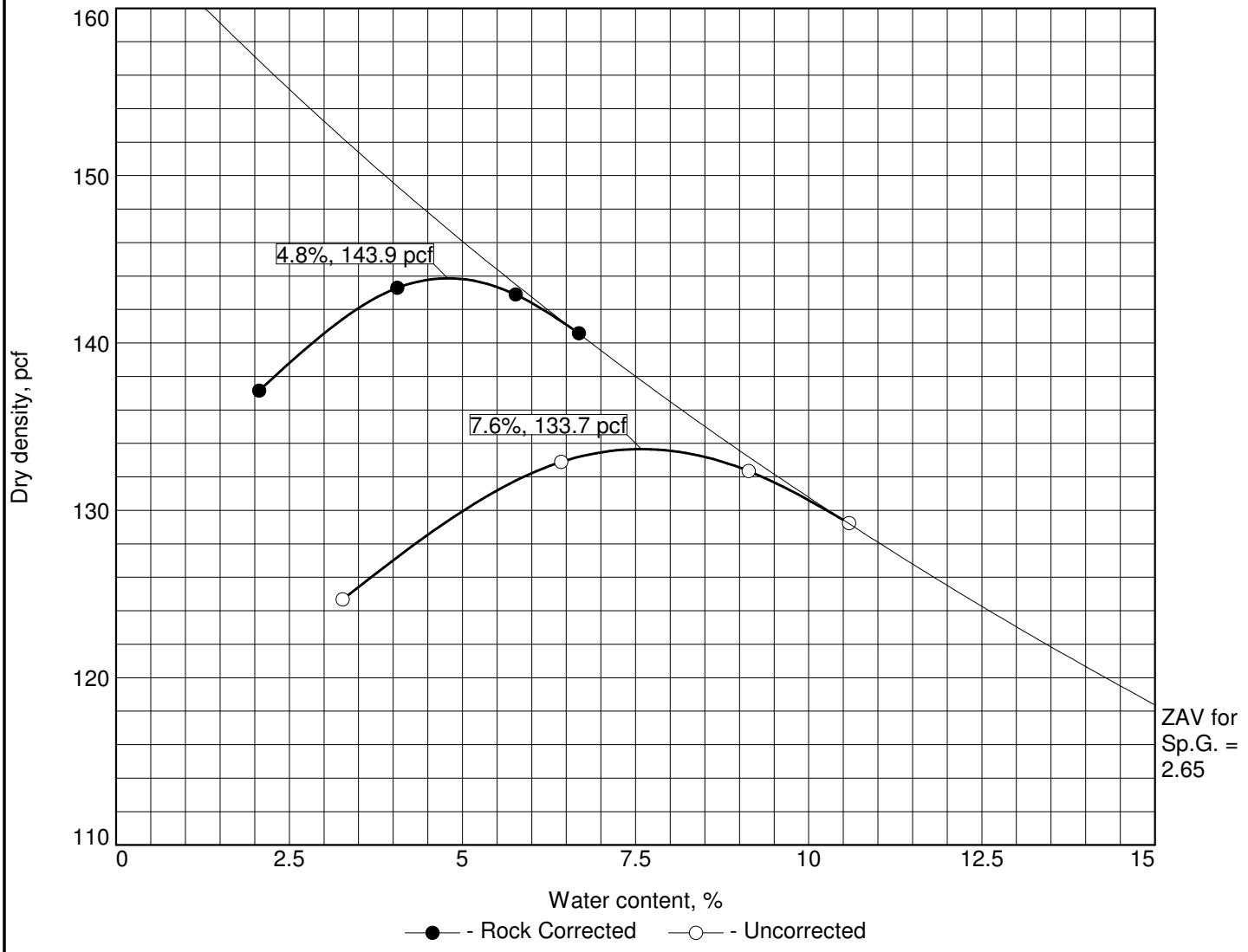

Test specification: ASTM D 698-07 Method C
ASTM D 4718-87 Oversize Corr. Applied to Each Test Point

Elev/ Depth	Classification		Nat. Moist.	Sp.G.	LL	PI	% > 3/4 in.	% < No.200
	USCS	AASHTO						
	GP-GM			2.65			36.9	6.4

ROCK CORRECTED TEST RESULTS	UNCORRECTED	MATERIAL DESCRIPTION
Maximum dry density = 143.9 pcf	133.7 pcf	Poorly-Graded GRAVEL with silt and sand
Optimum moisture = 4.8 %	7.6 %	

Project No. 12-188-060 **Client:** Dickman Excavation
Project: Dickman Excavation -CMT

○ **Location:** Dickman 3" Pit Run **Sample Number:** A-9328

Remarks:
Report No: A-9328-204

TD&H
THOMAS, DEAN & HOSKINS, INC.
ENGINEERING CONSULTANTS
GREAT FALLS - BOZEMAN - KALISPELL MONTANA
SPOKANE WASHINGTON
LEWISTON IDAHO

Figure

Tested By: SSS/CS **Checked By:**

Particle Size Distribution Report

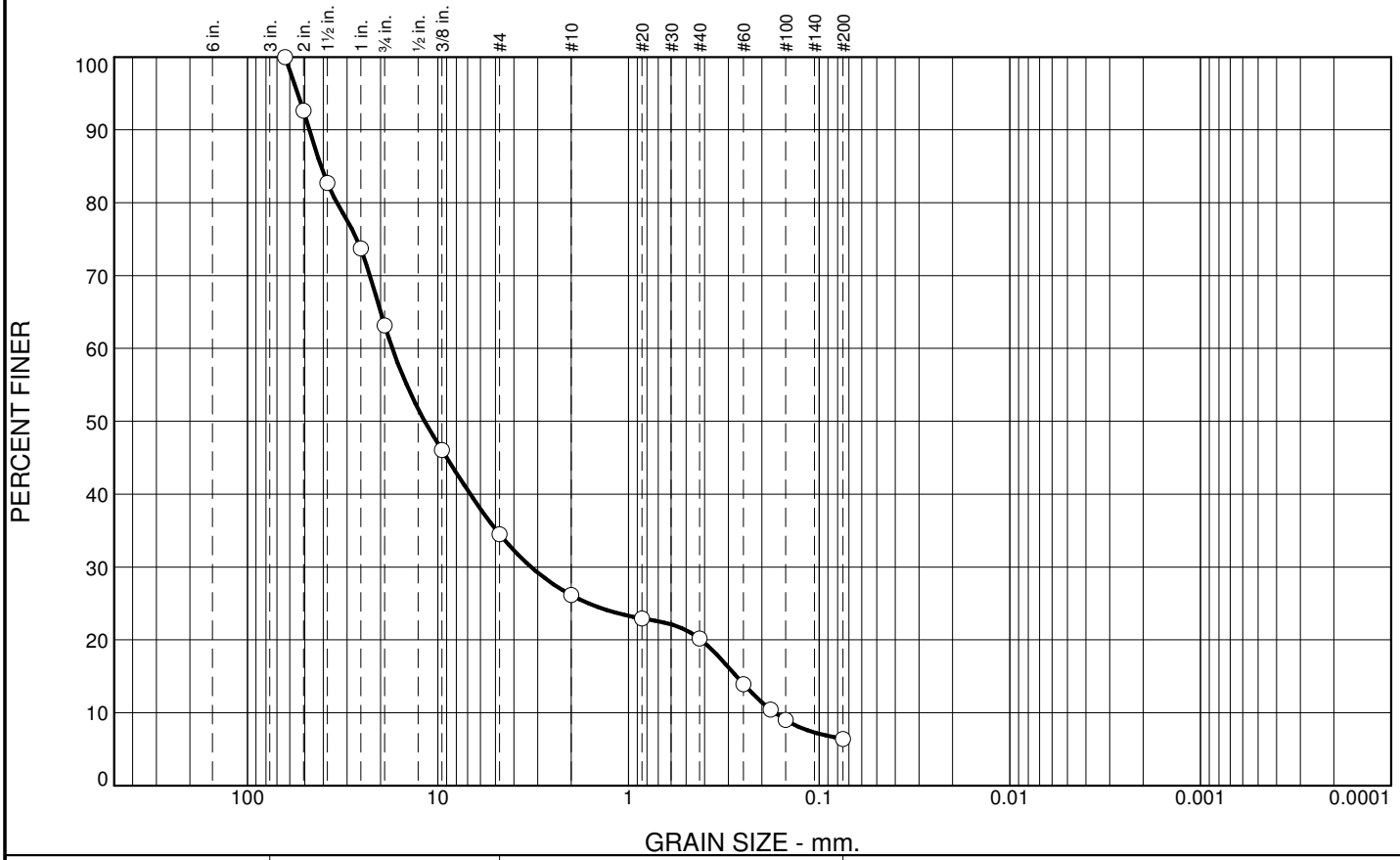

% +3"	% Gravel		% Sand			% Fines	
	Coarse	Fine	Coarse	Medium	Fine	Silt	Clay
0.0	36.9	28.6	8.3	6.0	13.8	6.4	

SIEVE SIZE	PERCENT FINER	SPEC.* PERCENT	PASS? (X=NO)
2.5"	100.0		
2"	92.6		
1.5"	82.7		
1"	73.7		
3/4"	63.1		
3/8"	46.0		
#4	34.5		
#10	26.2		
#20	22.9		
#40	20.2		
#60	13.9		
#80	10.5		
#100	9.0		
#200	6.4		

* (no specification provided)

Soil Description

Poorly-Graded GRAVEL with silt and sand

Atterberg Limits

PL= LL= PI=

Coefficients

D_{90}= 47.2661 D_{85}= 41.0888 D_{60}= 17.3845
D_{50}= 11.7239 D_{30}= 3.2435 D_{15}= 0.2725
D_{10}= 0.1709 C_u= 101.73 C_c= 3.54

Classification

USCS= GP-GM AASHTO=

Remarks

Report No: A-9328-206

Location: Dickman 3" Pit Run
Sample Number: A-9328

Date: 5/13/2014

TD&H THOMAS, DEAN & HOSKINS, INC.
ENGINEERING CONSULTANTS
GREAT FALLS - BOZEMAN - KALISPELL MONTANA
SPOKANE WASHINGTON
LEWISTON IDAHO

Client: Dickman Excavation
Project: Dickman Excavation -CMT

Project No: 12-188-060 **Figure**

Tested By: CS **Checked By:**

Anderson Steel

JOB NAME
SAND COULEE WATER TANK
CUSTOMER
ED BOLAND CONSTRUCTION
DESCRIPTION

RELEASE/LOAD SYMBOL

Printed 09/16/14 12:10 PM

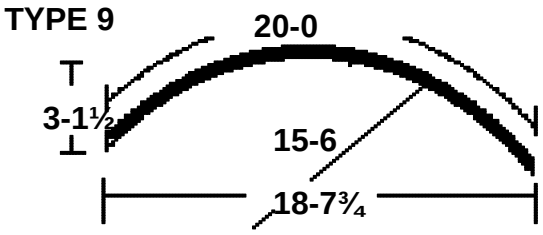

SAC

JOB #	RELEASE	MARK	CUSTOMER PO
302775	1		

TAG NO	TOTAL PIECES	TOTAL BUNDLES	COMMENTS	CUSTOMER JOB NO
1	5	1		

QUANTITY	SIZE	LENGTH	GRADE	WEIGHT
5	#6	20-00	60	150LB

TAG NO 1
QUANTITY 5
SIZE #6
GRADE 60
LENGTH 20-00
CUT LENGTH 20-00
MARK
JOB-REL 302775-1
WEIGHT 150LB

Anderson Steel

JOB NAME
SAND COULEE WATER TANK
CUSTOMER
ED BOLAND CONSTRUCTION
DESCRIPTION

RELEASE/LOAD SYMBOL

Printed 09/16/14 12:10 PM

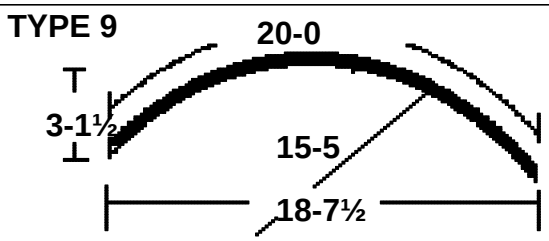

SAC

JOB #	RELEASE	MARK	CUSTOMER PO
302775	1		

TAG NO	TOTAL PIECES	TOTAL BUNDLES	COMMENTS	CUSTOMER JOB NO
2	5	1		

QUANTITY	SIZE	LENGTH	GRADE	WEIGHT
5	#6	20-00	60	150LB

TAG NO 2
QUANTITY 5
SIZE #6
GRADE 60
LENGTH 20-00
CUT LENGTH 20-00
MARK
JOB-REL 302775-1
WEIGHT 150LB

Anderson Steel

JOB NAME
SAND COULEE WATER TANK
CUSTOMER
ED BOLAND CONSTRUCTION
DESCRIPTION

RELEASE/LOAD SYMBOL

Printed 09/16/14 12:10 PM

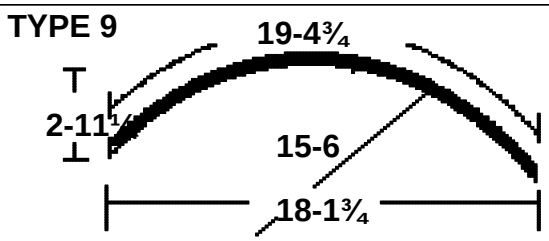

SAC

JOB #	RELEASE	MARK	CUSTOMER PO
302775	1		

TAG NO	TOTAL PIECES	TOTAL BUNDLES	COMMENTS	CUSTOMER JOB NO
3	1	1		

QUANTITY	SIZE	LENGTH	GRADE	WEIGHT
1	#6	19-05	60	29LB

TAG NO 3
QUANTITY 1
SIZE #6
GRADE 60
LENGTH 19-05
CUT LENGTH 19-05
MARK
JOB-REL 302775-1
WEIGHT 29LB

Anderson Steel

JOB NAME
SAND COULEE WATER TANK
CUSTOMER
ED BOLAND CONSTRUCTION
DESCRIPTION

RELEASE/LOAD SYMBOL

Printed 09/16/14 12:10 PM

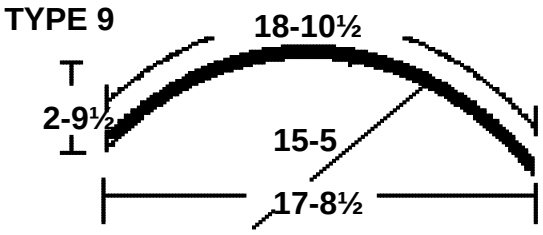

SAC

JOB #	RELEASE	MARK	CUSTOMER PO
302775	1		

TAG NO	TOTAL PIECES	TOTAL BUNDLES	COMMENTS	CUSTOMER JOB NO
4	1	1		

QUANTITY	SIZE	LENGTH	GRADE	WEIGHT
1	#6	18-11	60	28LB

TAG NO 4
QUANTITY 1
SIZE #6
GRADE 60
LENGTH 18-11
CUT LENGTH 18-11
MARK
JOB-REL 302775-1
WEIGHT 28LB

Anderson Steel

JOB NAME
SAND COULEE WATER TANK
CUSTOMER
ED BOLAND CONSTRUCTION
DESCRIPTION

RELEASE/LOAD SYMBOL

Printed 09/16/14 12:10 PM

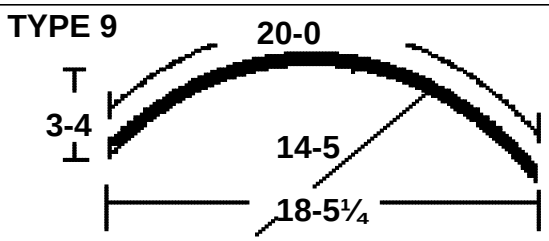

SAC

JOB #	RELEASE	MARK	CUSTOMER PO
302775	1		

TAG NO	TOTAL PIECES	TOTAL BUNDLES	COMMENTS	CUSTOMER JOB NO
5	45	1		

QUANTITY	SIZE	LENGTH	GRADE	WEIGHT
45	#4	20-00	60	601LB

TAG NO 5
QUANTITY 45
SIZE #4
GRADE 60
LENGTH 20-00
CUT LENGTH 20-00
MARK
JOB-REL 302775-1
WEIGHT 601LB

Anderson Steel

JOB NAME
SAND COULEE WATER TANK
CUSTOMER
ED BOLAND CONSTRUCTION
DESCRIPTION

RELEASE/LOAD SYMBOL

Printed 09/16/14 12:10 PM

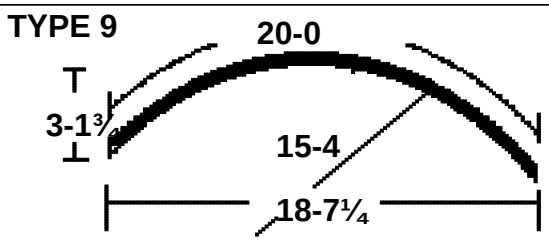

SAC

JOB #	RELEASE	MARK	CUSTOMER PO
302775	1		

TAG NO	TOTAL PIECES	TOTAL BUNDLES	COMMENTS	CUSTOMER JOB NO
6	45	1		

QUANTITY	SIZE	LENGTH	GRADE	WEIGHT
45	#4	20-00	60	601LB

TAG NO 6
QUANTITY 45
SIZE #4
GRADE 60
LENGTH 20-00
CUT LENGTH 20-00
MARK
JOB-REL 302775-1
WEIGHT 601LB

Anderson Steel

JOB NAME
SAND COULEE WATER TANK
CUSTOMER
ED BOLAND CONSTRUCTION
DESCRIPTION

RELEASE/LOAD SYMBOL

Printed 09/16/14 12:10 PM

TYPE S4

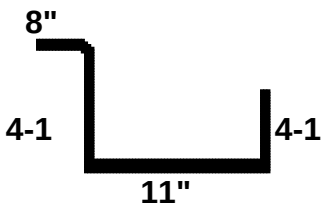

Angles 90-90-90

SAC

JOB #	RELEASE	MARK	CUSTOMER PO
302775	1		

TAG NO	TOTAL PIECES	TOTAL BUNDLES	COMMENTS	CUSTOMER JOB NO
7	66	1		

QUANTITY	SIZE	LENGTH	GRADE	WEIGHT
66	#4	9-05	60	430LB

TAG NO	QUANTITY	SIZE	GRADE	LENGTH	CUT LENGTH	MARK	JOB-REL	WEIGHT
7	66	#4	60	9-09	9-05		302775-1	430LB

Anderson Steel

JOB NAME
SAND COULEE WATER TANK
CUSTOMER
ED BOLAND CONSTRUCTION
DESCRIPTION

RELEASE/LOAD SYMBOL

Printed 09/16/14 12:10 PM

TYPE 9

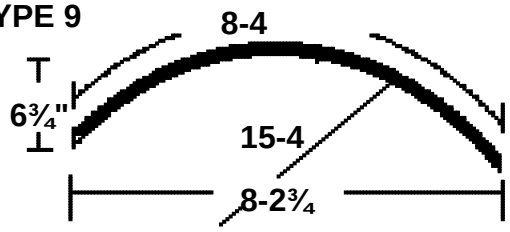

SAC

JOB #	RELEASE	MARK	CUSTOMER PO
302775	1		

TAG NO	TOTAL PIECES	TOTAL BUNDLES	COMMENTS	CUSTOMER JOB NO
8	9	1		

QUANTITY	SIZE	LENGTH	GRADE	WEIGHT
9	#4	8-04	60	50LB

TAG NO	QUANTITY	SIZE	GRADE	LENGTH	CUT LENGTH	MARK	JOB-REL	WEIGHT
8	9	#4	60	8-04	8-04		302775-1	50LB

Anderson Steel

JOB NAME
SAND COULEE WATER TANK
CUSTOMER
ED BOLAND CONSTRUCTION
DESCRIPTION

RELEASE/LOAD SYMBOL

Printed 09/16/14 12:10 PM

TYPE 9

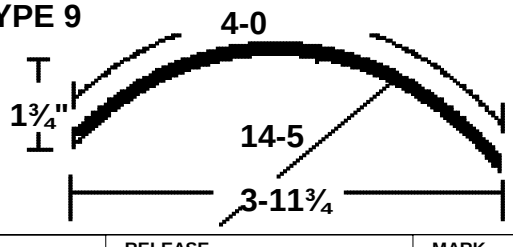

SAC

JOB #	RELEASE	MARK	CUSTOMER PO
302775	1		

TAG NO	TOTAL PIECES	TOTAL BUNDLES	COMMENTS	CUSTOMER JOB NO
9	9	1		

QUANTITY	SIZE	LENGTH	GRADE	WEIGHT
9	#4	4-00	60	24LB

TAG NO	QUANTITY	SIZE	GRADE	LENGTH	CUT LENGTH	MARK	JOB-REL	WEIGHT
9	9	#4	60	4-00	4-00		302775-1	24LB

Anderson Steel

JOB NAME
SAND COULEE WATER TANK
CUSTOMER
ED BOLAND CONSTRUCTION
DESCRIPTION

RELEASE/LOAD SYMBOL

Printed 09/16/14 12:10 PM

7-00

SAC

JOB #	RELEASE	MARK	CUSTOMER PO
302775	1		

TAG NO	TOTAL PIECES	TOTAL BUNDLES	COMMENTS	CUSTOMER JOB NO
10	12	1		

QUANTITY	SIZE	LENGTH	GRADE	WEIGHT
12	#6	7-00	60	126LB

TAG NO 10
QUANTITY 12
SIZE #6
GRADE 60
LENGTH 7-00
CUT LENGTH 7-00
MARK
JOB-REL 302775-1
WEIGHT 126LB

Anderson Steel

JOB NAME
SAND COULEE WATER TANK
CUSTOMER
ED BOLAND CONSTRUCTION
DESCRIPTION

RELEASE/LOAD SYMBOL

Printed 09/16/14 12:10 PM

20-00

SAC

JOB #	RELEASE	MARK	CUSTOMER PO
302775	1		

TAG NO	TOTAL PIECES	TOTAL BUNDLES	COMMENTS	CUSTOMER JOB NO
11	44	1		

QUANTITY	SIZE	LENGTH	GRADE	WEIGHT
44	#4	20-00	60	588LB

TAG NO 11
QUANTITY 44
SIZE #4
GRADE 60
LENGTH 20-00
CUT LENGTH 20-00
MARK
JOB-REL 302775-1
WEIGHT 588LB

Anderson Steel

JOB NAME
SAND COULEE WATER TANK
CUSTOMER
ED BOLAND CONSTRUCTION
DESCRIPTION

RELEASE/LOAD SYMBOL

Printed 09/16/14 12:10 PM

17-08

SAC

JOB #	RELEASE	MARK	CUSTOMER PO
302775	1		

TAG NO	TOTAL PIECES	TOTAL BUNDLES	COMMENTS	CUSTOMER JOB NO
12	4	1		

QUANTITY	SIZE	LENGTH	GRADE	WEIGHT
4	#4	17-08	60	47LB

TAG NO 12
QUANTITY 4
SIZE #4
GRADE 60
LENGTH 17-08
CUT LENGTH 17-08
MARK
JOB-REL 302775-1
WEIGHT 47LB

Anderson Steel

JOB NAME
SAND COULEE WATER TANK
CUSTOMER
ED BOLAND CONSTRUCTION
DESCRIPTION

RELEASE/LOAD SYMBOL

Printed 09/16/14 12:10 PM

14-08

SAC

JOB #	RELEASE	MARK	CUSTOMER PO
302775	1		

TAG NO	TOTAL PIECES	TOTAL BUNDLES	COMMENTS	CUSTOMER JOB NO
13	4	1		

QUANTITY	SIZE	LENGTH	GRADE	WEIGHT
4	#4	14-08	60	39LB

TAG NO 13
QUANTITY 4
SIZE #4
GRADE 60
LENGTH 14-08
CUT LENGTH 14-08
MARK
JOB-REL 302775-1
WEIGHT 39LB

Anderson Steel

JOB NAME
SAND COULEE WATER TANK
CUSTOMER
ED BOLAND CONSTRUCTION
DESCRIPTION

RELEASE/LOAD SYMBOL

Printed 09/16/14 12:10 PM

11-00

SAC

JOB #	RELEASE	MARK	CUSTOMER PO
302775	1		

TAG NO	TOTAL PIECES	TOTAL BUNDLES	COMMENTS	CUSTOMER JOB NO
14	4	1		

QUANTITY	SIZE	LENGTH	GRADE	WEIGHT
4	#4	11-00	60	29LB

TAG NO 14
QUANTITY 4
SIZE #4
GRADE 60
LENGTH 11-00
CUT LENGTH 11-00
MARK
JOB-REL 302775-1
WEIGHT 29LB

Anderson Steel

JOB NAME
SAND COULEE WATER TANK
CUSTOMER
ED BOLAND CONSTRUCTION
DESCRIPTION

RELEASE/LOAD SYMBOL

Printed 09/16/14 12:10 PM

10-10

SAC

JOB #	RELEASE	MARK	CUSTOMER PO
302775	1		

TAG NO	TOTAL PIECES	TOTAL BUNDLES	COMMENTS	CUSTOMER JOB NO
15	4	1		

QUANTITY	SIZE	LENGTH	GRADE	WEIGHT
4	#4	10-10	60	29LB

TAG NO 15
QUANTITY 4
SIZE #4
GRADE 60
LENGTH 10-10
CUT LENGTH 10-10
MARK
JOB-REL 302775-1
WEIGHT 29LB

Anderson Steel

JOB NAME
SAND COULEE WATER TANK
CUSTOMER
ED BOLAND CONSTRUCTION
DESCRIPTION

RELEASE/LOAD SYMBOL

Printed 09/16/14 12:10 PM

10-07

SAC

JOB #	RELEASE	MARK	CUSTOMER PO
302775	1		

TAG NO	TOTAL PIECES	TOTAL BUNDLES	COMMENTS	CUSTOMER JOB NO
16	8	1		

QUANTITY	SIZE	LENGTH	GRADE	WEIGHT
8	#4	10-07	60	57LB

TAG NO 16
QUANTITY 8
SIZE #4
GRADE 60
LENGTH 10-07
CUT LENGTH 10-07
MARK
JOB-REL 302775-1
WEIGHT 57LB

Anderson Steel

JOB NAME
SAND COULEE WATER TANK
CUSTOMER
ED BOLAND CONSTRUCTION
DESCRIPTION

RELEASE/LOAD SYMBOL

Printed 09/16/14 12:10 PM

10-02

SAC

JOB #	RELEASE	MARK	CUSTOMER PO
302775	1		

TAG NO	TOTAL PIECES	TOTAL BUNDLES	COMMENTS	CUSTOMER JOB NO
17	4	1		

QUANTITY	SIZE	LENGTH	GRADE	WEIGHT
4	#4	10-02	60	27LB

TAG NO 17
QUANTITY 4
SIZE #4
GRADE 60
LENGTH 10-02
CUT LENGTH 10-02
MARK
JOB-REL 302775-1
WEIGHT 27LB

Anderson Steel

JOB NAME
SAND COULEE WATER TANK
CUSTOMER
ED BOLAND CONSTRUCTION
DESCRIPTION

RELEASE/LOAD SYMBOL

Printed 09/16/14 12:10 PM

9-07

SAC

JOB #	RELEASE	MARK	CUSTOMER PO
302775	1		

TAG NO	TOTAL PIECES	TOTAL BUNDLES	COMMENTS	CUSTOMER JOB NO
18	4	1		

QUANTITY	SIZE	LENGTH	GRADE	WEIGHT
4	#4	9-07	60	26LB

TAG NO 18
QUANTITY 4
SIZE #4
GRADE 60
LENGTH 9-07
CUT LENGTH 9-07
MARK
JOB-REL 302775-1
WEIGHT 26LB

Anderson Steel

JOB NAME
SAND COULEE WATER TANK
CUSTOMER
ED BOLAND CONSTRUCTION
DESCRIPTION

RELEASE/LOAD SYMBOL

Printed 09/16/14 12:10 PM

8-10

SAC

JOB #	RELEASE	MARK	CUSTOMER PO
302775	1		

TAG NO	TOTAL PIECES	TOTAL BUNDLES	COMMENTS	CUSTOMER JOB NO
19	4	1		

QUANTITY	SIZE	LENGTH	GRADE	WEIGHT
4	#4	8-10	60	24LB

TAG NO 19
QUANTITY 4
SIZE #4
GRADE 60
LENGTH 8-10
CUT LENGTH 8-10
MARK
JOB-REL 302775-1
WEIGHT 24LB

Anderson Steel

JOB NAME
SAND COULEE WATER TANK
CUSTOMER
ED BOLAND CONSTRUCTION
DESCRIPTION

RELEASE/LOAD SYMBOL

Printed 09/16/14 12:10 PM

7-11

SAC

JOB #	RELEASE	MARK	CUSTOMER PO
302775	1		

TAG NO	TOTAL PIECES	TOTAL BUNDLES	COMMENTS	CUSTOMER JOB NO
20	4	1		

QUANTITY	SIZE	LENGTH	GRADE	WEIGHT
4	#4	7-11	60	21LB

TAG NO 20
QUANTITY 4
SIZE #4
GRADE 60
LENGTH 7-11
CUT LENGTH 7-11
MARK
JOB-REL 302775-1
WEIGHT 21LB

Anderson Steel

JOB NAME
SAND COULEE WATER TANK
CUSTOMER
ED BOLAND CONSTRUCTION
DESCRIPTION

RELEASE/LOAD SYMBOL

Printed 09/16/14 12:10 PM

6-10

SAC

JOB #	RELEASE	MARK	CUSTOMER PO
302775	1		

TAG NO	TOTAL PIECES	TOTAL BUNDLES	COMMENTS	CUSTOMER JOB NO
21	4	1		

QUANTITY	SIZE	LENGTH	GRADE	WEIGHT
4	#4	6-10	60	18LB

TAG NO 21
QUANTITY 4
SIZE #4
GRADE 60
LENGTH 6-10
CUT LENGTH 6-10
MARK
JOB-REL 302775-1
WEIGHT 18LB

Anderson Steel

JOB NAME
SAND COULEE WATER TANK

CUSTOMER
ED BOLAND CONSTRUCTION

DESCRIPTION

RELEASE/LOAD SYMBOL

Printed 09/16/14 12:10 PM

5-06

SAC

JOB #	RELEASE	MARK	CUSTOMER PO
302775	1		

TAG NO	TOTAL PIECES	TOTAL BUNDLES	COMMENTS	CUSTOMER JOB NO
22	4	1		

QUANTITY	SIZE	LENGTH	GRADE	WEIGHT
4	#4	5-06	60	15LB

TAG NO 22
QUANTITY 4
SIZE #4
GRADE 60
LENGTH 5-06
CUT LENGTH 5-06
MARK
JOB-REL 302775-1
WEIGHT 15LB

Anderson Steel

JOB NAME
SAND COULEE WATER TANK

CUSTOMER
ED BOLAND CONSTRUCTION

DESCRIPTION

RELEASE/LOAD SYMBOL

Printed 09/16/14 12:10 PM

3-11

SAC

JOB #	RELEASE	MARK	CUSTOMER PO
302775	1		

TAG NO	TOTAL PIECES	TOTAL BUNDLES	COMMENTS	CUSTOMER JOB NO
23	4	1		

QUANTITY	SIZE	LENGTH	GRADE	WEIGHT
4	#4	3-11	60	10LB

TAG NO 23
QUANTITY 4
SIZE #4
GRADE 60
LENGTH 3-11
CUT LENGTH 3-11
MARK
JOB-REL 302775-1
WEIGHT 10LB

ANDERSON STEEL SUPPLY
3811 RIVER DRIVE NORTH
GREAT FALLS, MT 59405
Ph. (406) 761-4354
Fax (406) 761-6441

Contractor: ED BOLAND CONSTRUCTION
Project: SAND COULEE WATER TANK
Location:
Material For:
Material:

Order No.:
Bar List No.: 302775-1
Bar List Date: 09/16/14
Job No.: 302775
Drawing No.:
Sheet No.: 1 of 2

D.O.T.:
D.O.T. ID#:
Delivery Date:

Inspector:
Contact:
Phone:

Input By:
Detailer: JFK
Phone:

WEIGHT SUMMARY (3119 LBS)

	HEAVY BENT		LIGHT BENT		STRAIGHT		STOCK		TOTAL	
SIZE	Qty	Weight	Qty	Weight	Qty	Weight	Qty	Weight	Qty	Weight
#4 Gr 60	108	1276	66	430	96	930			270	2636
#6 Gr 60	12	357			12	126			24	483
TOTALS	120	1633	66	430	108	1056			294	3119

Longest bar is: size 4, Straight, 20-00 Stock Rebar lbs = 0 Non-Stock Rebar lbs = 3119

QTY	SZ/GR	LENGTH	MARK	TYP	A	B	C	D	E	F/R	G	J	O	H	K	LB
5	#6 Gr60	20-00		9		20-00				15-06			18-07¾	3-01½		150
5	#6 Gr60	20-00		9		20-00				15-05			18-07½	3-01½		150
1	#6 Gr60	19-05		9		19-04¾				15-06			18-01¾	2-11¼		29
1	#6 Gr60	18-11		9		18-10½				15-05			17-08½	2-09½		28
45	#4 Gr60	20-00		9		20-00				14-05			18-05¼	3-04		601
45	#4 Gr60	20-00		9		20-00				15-04			18-07¼	3-01¾		601
66	#4 Gr60	9-09		S4	0-08	4-01	0-11	4-01								430
9	#4 Gr60	8-04		9		8-04				15-04			8-02¾	0-06¾		50
9	#4 Gr60	4-00		9		4-00				14-05			3-11¾	0-01¾		24

ANDERSON STEEL SUPPLY
3811 RIVER DRIVE NORTH
GREAT FALLS, MT 59405
Ph. (406) 761-4354
Fax (406) 761-6441

Contractor: ED BOLAND CONSTRUCTION
Project: SAND COULEE WATER TANK
Location:
Material For:
Material:

Order No.:
Bar List No.: 302775-1
Bar List Date: 09/16/14
Job No.: 302775
Drawing No.:
Sheet No.: 2 of 2

QTY	SIZE	LENGTH	MARK	LB
12	6	7-00		126
44	4	20-00		588
4	4	17-08		47
4	4	14-08		39

QTY	SIZE	LENGTH	MARK	LB
4	4	11-00		29
4	4	10-10		29
8	4	10-07		57
4	4	10-02		27
4	4	9-07		26

QTY	SIZE	LENGTH	MARK	LB
4	4	8-10		24
4	4	7-11		21
4	4	6-10		18
4	4	5-06		15
4	4	3-11		10

RECEIVED BY: _____ DATE: _____ Report Printed Tuesday, Sep 16 2014 12:56 PM

PETERSON COLORADO
10700 West 50th Ave.
Wheat Ridge, CO 80033
Phone: 303.388.6322
Fax: 303.399.0033

ENGINEERED EQUIPMENT

PETERSON COMPANY

PETERSON UTAH
3124 South Davis Drive (460W)
Salt Lake City, UT 84115
Phone: 801.972.3328
Fax: 801.974.5716

Sand Coulee
Water Tank
Rebar Layout
Plan 31'-0"
diameter

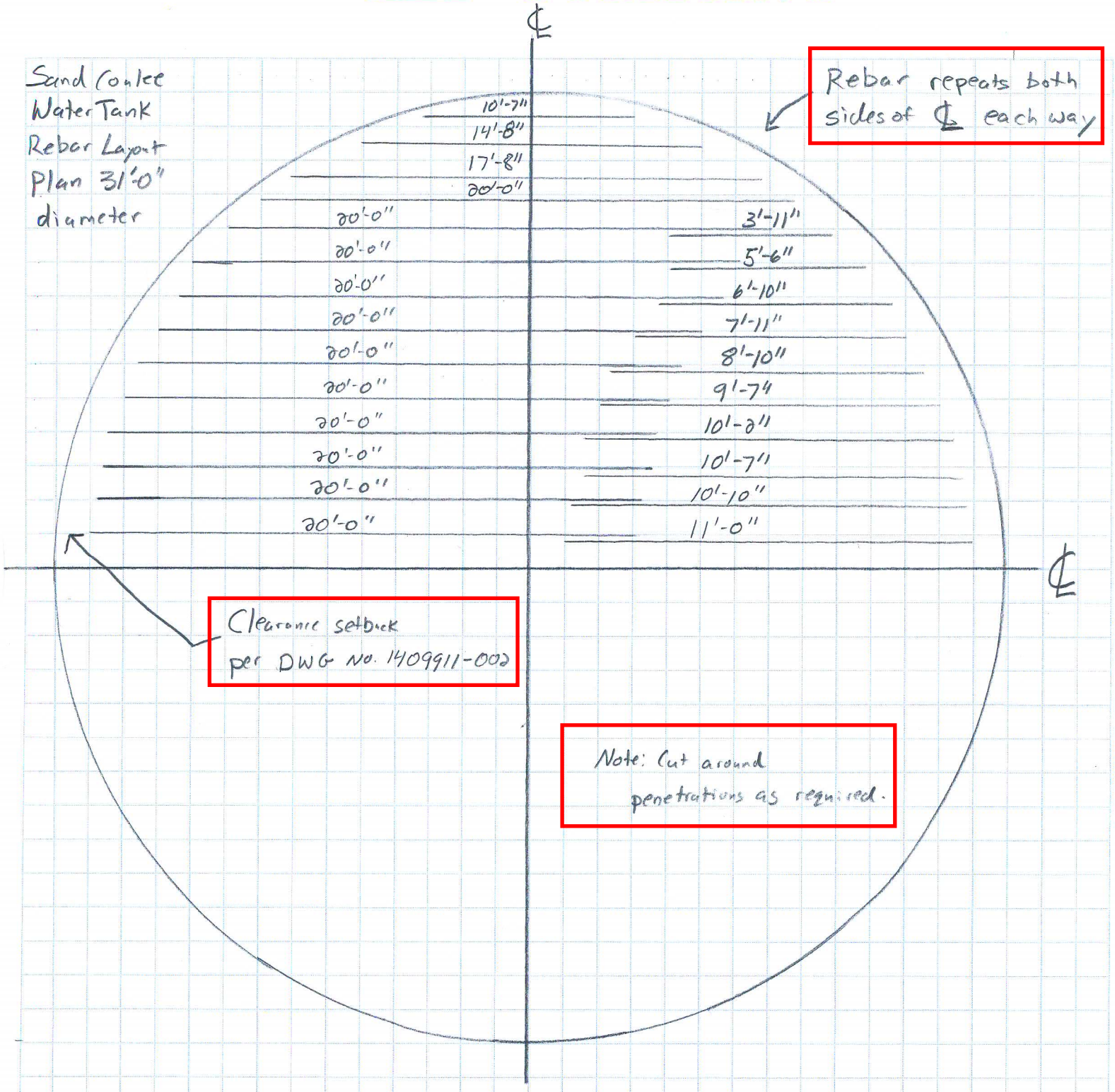

Rebar repeats both sides of ℄ each way

Clearance setback per DWG No. 1409911-002

Note: Cut around penetrations as required.

Large In-Stock Inventory • Fast Delivery • Complete Detailing & Fabrication Facilities

Vulcraft Roof Deck & Floor Deck • Verco Roof Deck & Floor Deck

Steel Bar Grating • Fiberglass Grating • Plank Grating • Expanded Metal • Perforated Sheet

Wire Cloth • Pre-engineered Stair Systems • Algrip™

www.peterson-co.com

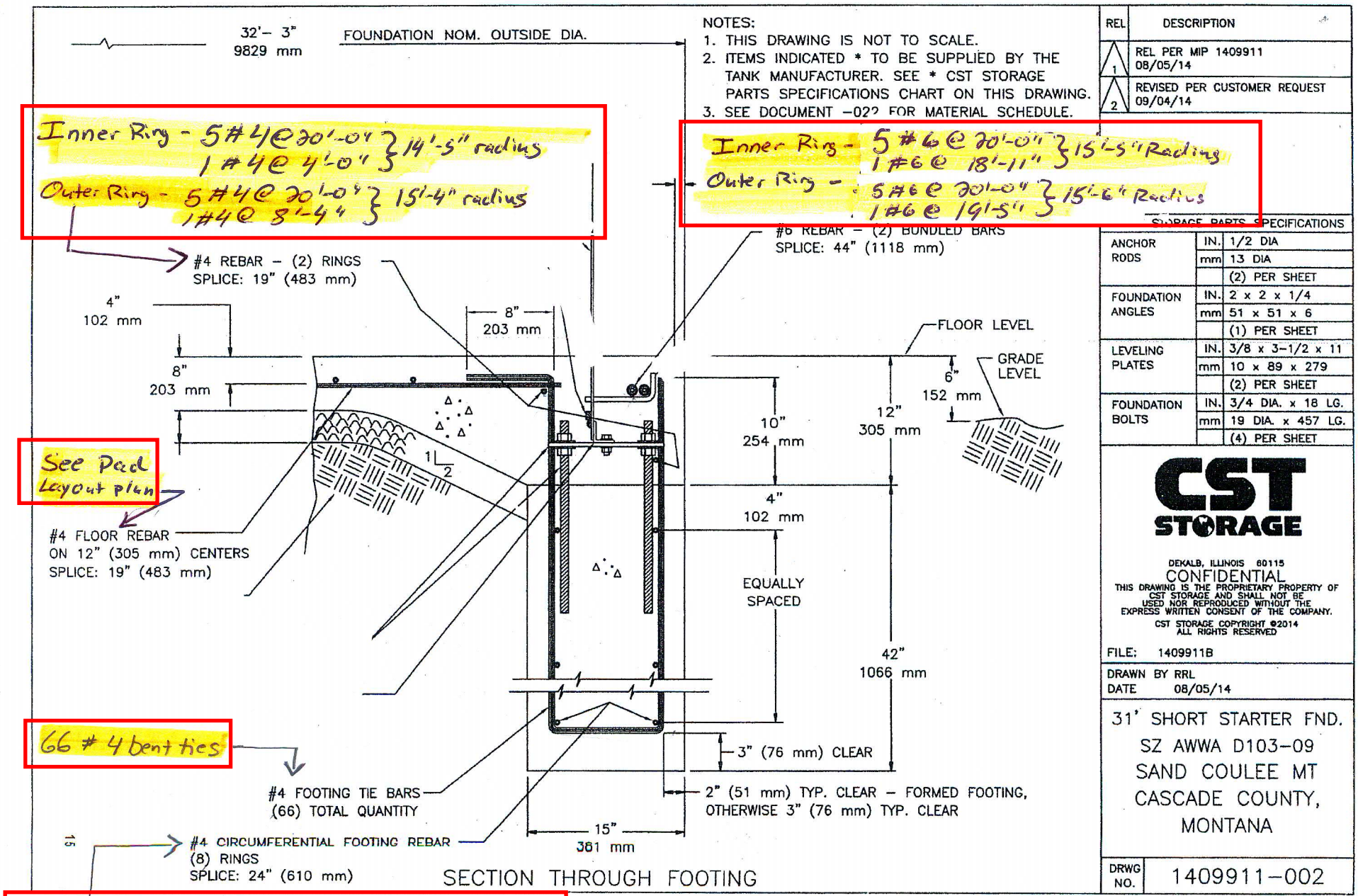

REL	DESCRIPTION
1	REL PER MIP 1409911 08/05/14
2	REVISED PER CUSTOMER REQUEST 09/04/14

STORAGE PARTS SPECIFICATIONS

ANCHOR RODS	IN.	1/2 DIA
	mm	13 DIA
		(2) PER SHEET
FOUNDATION ANGLES	IN.	2 x 2 x 1/4
	mm	51 x 51 x 6
		(1) PER SHEET
LEVELING PLATES	IN.	3/8 x 3-1/2 x 11
	mm	10 x 89 x 279
		(2) PER SHEET
FOUNDATION BOLTS	IN.	3/4 DIA. x 18 LG.
	mm	19 DIA. x 457 LG.
		(4) PER SHEET

CST STORAGE

DEKALB, ILLINOIS 60115

CONFIDENTIAL
THIS DRAWING IS THE PROPRIETARY PROPERTY OF CST STORAGE AND SHALL NOT BE USED NOR REPRODUCED WITHOUT THE EXPRESS WRITTEN CONSENT OF THE COMPANY.
CST STORAGE COPYRIGHT ©2014 ALL RIGHTS RESERVED

FILE: 1409911B

DRAWN BY RRL
DATE 08/05/14

31' SHORT STARTER FND.
SZ AWWA D103-09
SAND COULEE MT
CASCADE COUNTY,
MONTANA

DRWG NO. 1409911–002

12 #6 bars 7'-0" each

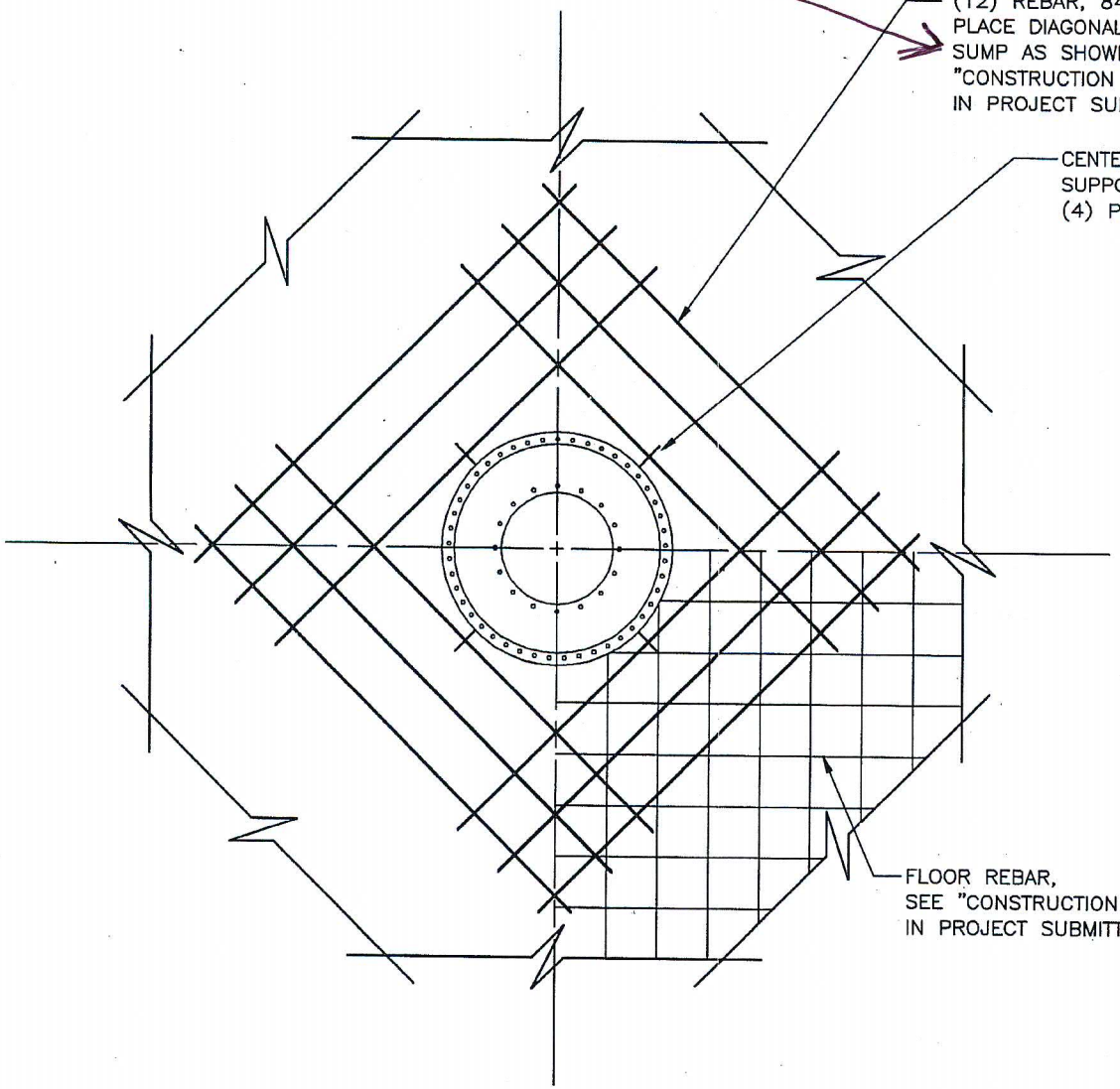

REL	DESCRIPTION	ECN DR. BY
1	RELEASED FOR PRODUCTION	90034 DMN
2	REVISED COPYRIGHT STATEMENT	91149 DMN

A.O. SMITH
ENGINEERED STORAGE PRODUCTS COMPANY
DEKALB, ILLINOIS 60115

CONFIDENTIAL
THIS DRAWING IS THE PROPRIETARY PROPERTY OF A.O. SMITH ENGINEERED STORAGE PRODUCTS COMPANY AND SHALL NOT BE USED NOR REPRODUCED WITHOUT THE EXPRESS WRITTEN CONSENT OF THE COMPANY.
AOSESPC COPYRIGHT © 1998
ALL RIGHTS RESERVED

DRAWN BY DMN
DATE 08/19/91

CONSTRUCTION DETAIL
CENTER SUMP
REBAR PLACEMENT
PLAN VIEW
CONCRETE FLOOR

DRWG NO. 261338

TWP LED
LED Wall Luminaire

Catalog Number

Notes

Type

Hit the Tab key or mouse over the page to see all interactive elements.

Specifications

Width: 16-1/8" *(41.0 cm)*

Height: 15-1/2" *(39.4 cm)*

Depth: 7-3/4" *(19.7 cm)*

Weight: 15 lbs *(6.8kg)*

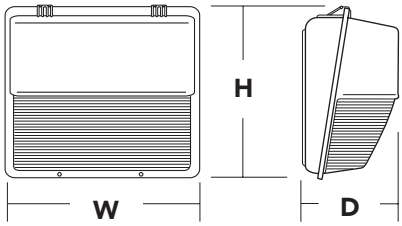

Introduction

The popular TWP luminaire is now available with LED technology. Cast in a traditional dayform, the TWP LED offers a classic appearance and is powered by advanced LEDs. A one-piece polycarbonate cover delivers enhanced durability and is vandal resistant, making the TWP LED ideal for lower mounting heights or high-traffic areas.

The new TWP LED luminaire is powerful yet energy efficient, capable of replacing up to a 250W metal halide luminaire while saving up to 77% in energy costs. Offering an expected service life of more than 20 years, the TWP LED eliminates frequent lamp and ballast replacements associated with traditional technologies.

Ordering Information

EXAMPLE: TWP LED 30C 700 50K T3M MVOLT DDBXD

TWP LED						
Series	**Performance Package**	**Distribution**	**Voltage**	**Control Options**	**Other Options**	**Finish** *(required)*
TWP LED	**LEDs** 10C 10 LEDs (one engine) 20C 20 LEDs (two engines) 30C 30 LEDs (one engine) **Drive current** 700 700 mA **Color temperature** 50K 5000K (standard) 40K 4000K (optional)	T3M Type III Medium	MVOLT [1] 120 [1] 208 [1] 240 [1] 277 [1] 347 [2] 480 [2]	**Shipped installed** DMG 0-10V dimming driver (no controls) PE Photoelectric cell, button type [3]	**Shipped installed** SF Single fuse (120, 277, 347V) [4] DF Double fuse (208, 240, 480V) [4] TP Tamper proof screws NOM NOM Certified SPD Separate surge protection [5] **Shipped separately** WG Wire guard [6]	DDBXD Dark bronze DBLXD Black DWHXD White DDBTXD Textured dark bronze DBLBXD Textured black DWHGXD Textured white

Stock configurations are offered for shorter lead times:

Standard Part Number	Stock Part Number
TWP LED 10C 700 50K T3M MVOLT DDBXD	**TWP LED 10C 50K**
TWP LED 20C 700 50K T3M MVOLT DDBXD	**TWP LED 20C 50K**
TWP LED 30C 700 50K T3M MVOLT DDBXD	**TWP LED 30C 50K**

Accessories

Ordered and shipped separately.

TWPWG U Wire guard accessory [7]

NOTES

1. MVOLT driver operates on any line voltage from 120-277V (50/60 Hz). Specify 120, 208, 240 or 277 options only when ordering with fusing (SF, DF options) or photocontrol (PE).
2. Not available with 10C option.
3. Must specify voltage; not available with MVOLT or 480 voltage options.
4. Single fuse (SF) requires 120, 277 or 347 voltage option. Double fuse (DF) requires 208, 240 or 480 voltage option.
5. See the electrical section on page 2 for more details.
6. Also available as a separate accessory; see Accessories information at left.
7. Requires field modification (only when ordered as a separate accessory).

LITHONIA LIGHTING

One Lithonia Way • Conyers, Georgia 30012 • Phone: 800.279.8041 • Fax: 770.918.1209 • www.lithonia.com
© 2012-2013 Acuity Brands Lighting, Inc. All rights reserved.

Performance Data

Lumen Output

Lumen values are from photometric tests performed in accordance with IESNA LM-79-08. Data is considered to be representative of the configurations shown, within the tolerances allowed by Lighting Facts. Actual wattage may differ by +/- 8% when operating between 120-480V +/- 10%. Contact factory for performance data on any configurations not shown here.

LEDs	Drive Current (mA)	Performance Package	System Watts	Dist. Type	40K (4000K, 70 CRI)					50K (5000K, 65 CRI)				
					Lumens	B	U	G	LPW	Lumens	B	U	G	LPW
10C (10 LEDs)	700	10C 700 --K	26 W	T3M	1478	0	3	2	57	1614	0	3	2	62
20C (20 LEDs)	700	20C 700 --K	45 W	T3M	2877	0	3	3	64	3149	0	3	3	70
30C (30 LEDs)	700	30C 700 --K	67 W	T3M	4157	0	3	3	62	4377	0	3	3	65

Lumen Ambient Temperature (LAT) Multipliers

Use these factors to determine relative lumen output for average ambient temperatures from 0-40°C (32-104°F).

Ambient		Lumen Multiplier
0°C	32°F	1.02
10°C	50°F	1.01
20°C	68°F	1.00
25°C	**77°F**	**1.00**
30°C	86°F	1.00
40°C	104°F	0.98

Projected LED Lumen Maintenance

Data references the extrapolated performance projections for the **TWP LED 30C 700** platform in a **25°C ambient**, based on 10,000 hours of LED testing (tested per IESNA LM-80-08 and projected per IESNA TM-21-11).

To calculate LLF, use the lumen maintenance factor that corresponds to the desired number of operating hours below. For other lumen maintenance values, contact factory.

Operating Hours	0	25,000	50,000	100,000
Lumen Maintenance Factor	1.0	0.97	0.96	0.94

Electrical Load

LEDs	Drive Current (mA)	System Watts	Current (A)					
			120	208	240	277	347	480
10C	700	26 W	0.24	0.14	0.12	0.10	-	-
20C	700	45 W	0.42	0.24	0.21	0.18	0.14	0.10
30C	700	67 W	0.62	0.36	0.31	0.27	0.21	0.16

Photometric Diagrams

To see complete photometric reports or download .ies files for this product, visit Lithonia Lighting's TWP LED homepage.

Isofootcandle plots for the TWP LED --- 700 50K T3M. Distances are in units of mounting height (15').

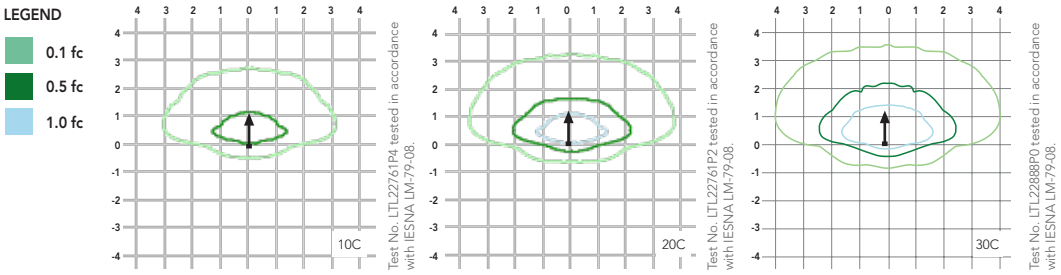

FEATURES & SPECIFICATIONS

INTENDED USE
The energy savings, long life and easy-to-install design of the TWP LED make it the smart choice for building-mounted doorway and pathway illumination for nearly any facility.

CONSTRUCTION
Die-cast aluminum rear housing has an impact-resistant, UV-stabilized polycarbonate front housing and refractor that is fully gasketed. Modular design allows for ease of maintenance. The LED driver is mounted to the front casting to thermally isolate it from the light engine for low operating temperature and long life. Housing is completely sealed against moisture and environmental contaminants.

FINISH
Exterior parts are protected by a zinc-infused Super Durable TGIC thermoset powder coat finish that provides superior resistance to corrosion and weathering. A tightly controlled multi-stage process ensures a minimum 3 mils thickness for a finish that can withstand extreme climate changes without cracking or peeling. Available in textured and non-textured finishes.

OPTICS
Protective polycarbonate lens covers the light engine's precision-molded proprietary acrylic lenses. Light engines are available in 5000K (65 min. CRI) configurations.

ELECTRICAL
Light engine(s) consist of 10 or 30 high-efficacy LEDs mounted to a metal-core circuit board and integral aluminum heat sink to maximize heat dissipation and promote long life (L94/100,000 hrs at 25°C). The electronic driver has a power factor of >90%, THD <20%, and a minimum 2.5 KV surge rating. When ordering the SPD option, a separate surge protection device is installed within the luminaire which meets a minimum Category C low operation (per ANSI/IEEE C62.41.2).

INSTALLATION
Top 3/4" threaded wiring access. Back access through removable 3/4" knockout. Feed-thru wiring can be achieved by using a condulet tee. Mount on any flat, vertical surface.

LISTINGS
CSA certified to U.S. and Canadian standards. Rated for -40°C minimum ambient.

WARRANTY
Five year limited warranty. Full warranty terms located at www.acuitybrands.com/CustomerResources/Terms_and_conditions.aspx.

Note: Specifications subject to change without notice.

© 2012-2013 Acuity Brands Lighting, Inc. All rights reserved.

RepublicConduit

Electrunite® Electrical Metallic Tubing

Simplify Installation, Save Time, Spend Less

Republic Conduit's Electrunite® Electrical Metallic Tubing (EMT) is the easiest electrical conduit to bend currently available in the marketplace. It is the thinnest and lightest of all of our products. Republic's EMT is manufactured from high quality, flat rolled steel and is produced using Republic Conduit's exclusive Electrogalvanizing process, which provides a protective surface coating of satin-smooth, corrosion-resistant zinc to the tube. A secondary treatment, following the zinc coating, extends the surface protection of Republic Conduit's EMT.

The finished Republic EMT is uniform in outside diameter (OD), wall thickness and ductility. Its structural strength ensures system integrity, as it doesn't sag or become brittle under extreme temperature, nor does it burn or decompose, producing harmful smoke or gases.

Large sizes of Republic's EMT offer an advantage for jobs where weight is a key factor in designing an electrical wiring system. Because of its thinner walls, large size EMT weighs approximately 40% less than Galvite® Electrical Rigid Metal Conduit-Steel (Galvite® ERMC-S). This, in turn, allows Republic Conduit's customers to save on shipping and overall installation costs. And because the walls of this product are thinner, there is approximately 22% more space on the inside of the conduit as compared to identically sized Galvite® ERMC-S.

Republic Conduit is committed to implementing effective quality management systems and processes. Our Georgia facility has maintained an ISO certification since 1995 and has been recertified in 2008. Also in 2008, the Kentucky facility has achieved its initial certification by successfully meeting the requirements for ISO 9001:2000.

Features and Benefits

Consistent Quality – Republic Conduit's entire production process is solely focused on manufacturing quality products made to our customers' specifications. Our products are also manufactured to the highest criteria of the American National Standards Institute (ANSI) and Underwriters Laboratories (UL). Because of its ductility and tight tolerances, our EMT promotes wrinkle-free bends, reduces kinking and minimizes splitting from repeated bending and straightening.

Cost-Effective Installations – Republic's EMT is a thin wall product with more inside wiring space, which means that less product is necessary to purchase.

- Easier wire pulling and pushing – diamond-shaped ID pattern* and protective, slick, inside coating (Silverslick®), reduce friction when pulling / pushing the wires. The Silverslick finish stays hard and smooth in various climate conditions, protecting your conduit and your investment.
- Accurate, time-efficient bending – Because 1/2", 3/4" and 1" sizes of Republic Conduit's EMT are Inch-Marked® and Guide-Lined®, the product is easier to cut and bend properly right away,** further reducing waste.
- Lower life-cycle costs – steel conduit is impact and fire resistant, chemically compatible with concrete and resists cracking, flaking and damage from severe bending. Its physical and mechanical properties ensure that the pipe has an extended shelf life, great for usage and storage without degradation in quality.

**Applies to 1/2", 3/4" and 1" EMT sizes.* ***When using an EMT bender.*

System Grounding and Electromagnetic Interference Shielding – Republic Conduit's EMT not only protects people from the harmful effects of faulty wiring, but also protects any nearby electric / electronic equipment from damage by the electromagnetic field.

Trade sizes range from 1/2" to 4".

Conduit is manufactured in the U.S.

Available Sizes

To easily identify the right size pipe for the job, simply look at our EMT's color coded ends (1/2" sizes use black tape, 3/4" sizes use red and 1" sizes use blue).

Inventories of our products are maintained by leading electrical distributors throughout North America. Contact our Agent in your area today or visit www.republicconduit.com for more information.

Weights and Dimensions*

Trade Size Designator		Outside Diameter (OD)		Nominal Inside Diameter (ID)		Nominal Wall Thickness		Nominal Weight per 100 Feet		Feet per Bundle	Standard Lifts Length		Weight		Color Code	Method
US	Metric	IN	mm	IN	mm	IN	mm	LBS	kg		FEET	m	LBS	kg		
1/2	16	0.706	17.93	0.622	15.80	0.042	1.07	30	13.6	100	7000	2135	2100	952.4	Black	Tape
3/4	21	0.922	23.42	0.824	21.00	0.049	1.25	46	20.9	100	5000	1525	2300	1043.1	Red	Tape
1	27	1.163	29.54	1.049	26.60	0.057	1.45	67	30.4	100	3000	915	2010	911.6	Blue	Tape
1 1/4	35	1.510	38.35	1.380	35.05	0.065	1.65	101	45.8	50	2000	610	2020	916.1	Red	Tape
1 1/2	41	1.740	44.20	1.610	40.89	0.065	1.65	116	52.6	50	1500	457.5	1740	789.1	Black	Tape
2	53	2.197	55.80	2.067	52.50	0.065	1.65	148	67.1	30	1200	366	1776	805.4	Blue	Tape
2 1/2	63	2.875	73.03	2.731	69.36	0.072	1.83	216	98.0		610	186.1	1318	597.7	Black	Tape
3	78	3.500	88.90	3.356	85.24	0.072	1.83	263	119.3		510	155.6	1341	608.2	Blue	Tape
3 1/2	91	4.000	101.6	3.834	97.38	0.083	2.11	349	158.3		370	112.9	1291	585.5	Black	Tape
4	103	4.500	114.3	4.334	110.08	0.083	2.11	393	178.2		300	91.5	1179	534.7	Blue	Tape

Outside Diameter		
For trade size through 2"	±0.005	±0.13 mm
For trade size 2 1/2"	±0.010	±0.25 mm
For trade size 3"	±0.015	±0.38 mm
For trade sizes 3 1/2" and 4"	±0.020	±0.51 mm

- The values in feet / pound units are standard. The metric equivalents may be approximate. Conduit is always identified by its English or Metric Trade Size Designator.
- 1/2", 3/4", and 1" sizes of Republic's EMT are furnished bearing the Inch-Marked® and Guide-Lined® trademarks and with diamond knurled inside finish for easier wire pull / push.
- All sizes furnished in 10' lengths.
- Applicable length tolerance = ±1/4"(±6.35mm) without a coupling.
- 2 1/2", 3", 3 1/2", and 4" OD sizes are the same as corresponding trade sizes of Galvite ERMC-S.

Specifications

Architects desiring to specify Republic Conduit EMT should include the following description:

Electrical conductors shall be enclosed in Electrunite EMT in accordance with the National Electrical Code (NEC). Electrical metallic tubing shall be mild steel, electrically-welded, galvanized and produced to the following specifications:

- UL Standard for Electrical Metallic tubing – Steel, UL797, File # E7465
- National Electric Code, 2002 Article 358 (1999 NEC, Article 348)
- Federal Specification WW-C-563

The above Federal Specification WW-C-563 may still be referenced; however, the federal government has canceled it and has adopted the Underwriters Laboratories 797 and American National Standards Institute C80.3 standards.

**All orders are subject to Republic Conduit's Terms and Conditions, a copy of which is available upon request.*

SIMpull THHN™ THWN

600 Volts. Copper Conductor
Thermoplastic Insulation/ SIM Nylon Sheath
Heat, Moisture, Gasoline, and Oil Resistant II
Also Rated MTW and THWN-2
SIM Technology® for Easier Pulling

APPLICATIONS

Southwire SIMpull THHN or THWN-2 conductors are primarily used in conduit and cable trays for services, feeders, and branch circuits in commercial or industrial applications as specified in the National Electrical Code. Voltage for all applications is 600 volts. SIMpull THHN conductors are designed to be used without application of pulling lubricant. Allowable temperatures are as follows:

- THHN or T90 Nylon- Dry locations not to exceed 90° C
- THWN-2- Wet or dry locations not to exceed 90° C or locations not to exceed 75° C when exposed to oil
- TWN75- Wet locations not to exceed 75° C
- MTW- Wet locations or when exposed to oil at temperatures not to exceed 60° C or dry locations not to exceed 90° C (with ampacity limited to that for 75° C conductor temperature per NFPA 79)
- AWM- Dry locations not to exceed 105° C when rated and used as appliance wiring material

SPECIFICATIONS

Southwire SIMpull THHN® or THWN-2 or MTW (also AWM) comply with:

· ASTM - B3, B8 (7,19, 37, 61 Strands), B 787 (19 Wire Combination Unilay Strand)
· UL Standard 83, 1581, and 1063(MTW)
· T90 Nylon/TWN75 sizes through 1000 kcmil CSA C22.2 No. 75
· NOM-ANCE 90° C · Federal Specification A-A-59544
· National Electrical Code, NFPA 70 · VW-1 - Sizes 14 through 1 AWG
· CT rated in sizes 1/0 AWG and larger
· FT1
· AWM - Sizes 14 through 6 AWG. MTW available in stranded only
· NEMA WC-70 Construction Requirements
· RoHS/REACH Compliant

Construction

Southwire SIMpull THHN or THWN-2 or MTW copper conductors are soft annealed copper. #14 - 4/0 AWG uses a combination unilay strand and 250 kcmil and larger uses a compressed copper strand. The wire is insulated with a tough heat and moisture resistant poly vinyl chloride (PVC), over which a SIM (SLIKQWIK® Infused Membrane) nylon (polyamide) or UL Recognized equal jacket is applied. Available in black, white, red, blue, purple, green, yellow, orange, brown and gray. Some colors are subject to economic order quantity.Marked sunlight resistant in sizes 2 AWG and larger.
THWN-2 available in sizes 8 AWG and larger .
Sizes 14 - 10 AWG are available with SIMpull Technology only in SIMpull Barrel or CoilPAK configurations.

Southwire
One Southwire Drive
Carrollton, Ga. 30119 USA

MADE IN THE USA

NoLube™

Copyright 2012 Southwire Company All Rights Reserved
Southwire is a registered trademark of Southwire Company

SIMpull THHN

Conductor		Insulation Thickness (mils)	Jacket Thickness (mils)	Nominal O.D. (mils)	Approx. Weight per 1000' (lbs)	Allowable Ampacities+			
Size (AWG or kcmil)	Number of Strands					60° C	75° C	90° C	Standard Package
14*	1	15	4	102	15	15	15	15	AC
12*	1	15	4	119	23	20	20	20	AC
10*	1	20	4	150	36	30	30	30	AC
14*	19	15	4	109	16	15	15	15	AC
12*	19	15	4	128	24	20	20	20	AC
10*	19	20	4	161	38	30	30	30	AC
8	19	30	5	213	63	40	50	55	ABCD
6	19	30	5	249	95	55	65	75	ABCD
4	19	40	6	318	152	70	85	100	ABCD
3	19	40	6	346	189	85	100	115	ABCD
2	19	40	6	378	234	95	115	130	ABCD
1	19	50	7	435	299	110	130	145	ABCD
1/0	19	50	7	474	372	125	150	170	ABCD
2/0	19	50	7	518	462	145	175	195	ABCD
3/0	19	50	7	568	575	165	200	225	ABCD
4/0	19	50	7	624	718	195	230	260	ABCD
250	37	60	8	694	851	215	255	290	ABCD
300	37	60	8	747	1012	240	285	320	ABC
350	37	60	8	797	1174	260	310	350	ABC
400	37	60	8	842	1334	280	335	380	ABC
500	37	60	8	926	1655	320	380	430	ABCD
600	61	70	9	1024	1987	350	420	475	ABC
750	61	70	9	1126	2464	400	475	535	BC
1000	61	70	9	1275	3257	455	545	615	C

* Sizes 14 - 10 AWG available with patented Sim Technology® No Lube® jacket only in SIMpull® Wire Barrel or CoilPAK configurations.
+Allowable ampacities shown are for general use as specified by the 2011 Edition

Standard Package:
A - 2500' Reel
B - 1000' Reel

Southwire
One Southwire Drive
Carrollton, Ga. 30119 USA

MADE IN THE USA

NoLube™

Copyright 2012 Southwire Company All Rights Reserved
Southwire is a registered trademark of Southwire Company

of the National Electrical Code Section 310.15 and 240.4(D). Unless the equipment is marked for use at higher temperatures the conductor shall be limited to the following per NEC 110.14(C). 60° C - When terminated to equipment for circuits rated 100 ampers or less or marked for 14 - 1 AWG conductors. 75° C - When terminated to equipment for circuits rated over 100 ampers or marked for conductors larger than1 AWG. 90° C - THHN dry locations and THWN wet or dry locations for ampacity adjustment purposes using NEC section 310.15.	C - 500' Spool D - 5000' Reel

Southwire
One Southwire Drive
Carrollton, Ga. 30119 USA

MADE IN THE USA

NoLube™

Copyright 2012 Southwire Company All Rights Reserved
Southwire is a registered trademark of Southwire Company

OUTDOOR SENSORS
TUFF DOME™

Vandal Resistant Tuff Dome Sensor can be used remotely or with floodlights.

Vandalproof Sensor:
- *Resists damage from balls & bonks*
- *Vandalproof Allen drive screws & tool provided*
- *Vandalproof close-up plugs*

Surge Protected

Controls up to 500 watts or 180 watts with Good NIGHT glow bright LIGHT

Glows dusk-to-dawn
Bright when motion occurs

Can be wired in parallel

Three 1/2" threaded holes for lighting fixtures

Die cast aluminum

Vandal resistant color matched lens removes to access controls and vertical adjustment

Fits round and rectangular boxes covering oversized openings

180º Detection Pattern

Small, unobtrusive design blends with building facades

Quick installation with 5 second Test Time and Auto Test Logic

LED "On Guard" indicator

Protected Manual Override with Auto Reset after 8 hours

White or Bronze finish

5 Year Warranty

Here's How Good NIGHT glow bright LIGHT Works!

Off-
During Daylight

Glow-
Good NightLight glows at 20% wattage from Dusk-to-Dawn

Bright-
100% Bright security light when motion occurs

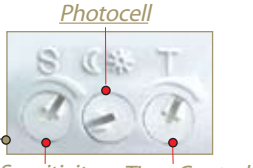

Lens removes for access to controls on sensor bottom.

Specifications

UL Listing:
Suitable for wet locations

Switching Capacity:
Relay On/Off Model:
500 watts Incandescent or
250 watts Fluorescent @ 120 volts

Good NightLight Model:
180 watt Incandescent @ 120V. Runs at 20% lamp wattage from dusk to dawn. Brightens to full wattage upon detection.

Voltage:
120 volts AC, 60Hz

Time Adjustment:
5 seconds to 15 minutes

Detection Zone:
Full 180 degrees by 25'

Quick Test Time:
5 second test time for fast installation. Works day or night.

"No Hands" Auto Testing:
Auto mode starts after 4 minutes of testing. No adjustment needed.

Vandal Resistant Lens:
Hard lens resists vandalism

Photoelectric Control:
Deactivates lights during daylight. Fully adjustable for 24 hour operation or custom applications.

Case Construction:
Die cast aluminum with polyethylene lens.

Manual Override:
Double flip wall switch logic prevents activation by brief power outages. Resets after 8 hours. No extra wiring needed.

Surge Protection:
Withstands up to 3000 volts

LED Detection Indicator:
LED glows red day & night for "on-guard" deterrence.

RF Immunity:
Circuits fully shielded for maximum radio frequency immunity.

Patents:
RAB sensor and fixture designs are protected under U.S. and international intellectual property laws.

Info Online 24/7

www.rabweb.com
Wiring Diagrams
Installation Instructions
Product Specifications

TUFF Dome

Controls up to 500 watts Incandescent or 240 watts Fluorescent of outdoor lighting from an unobtrusive sensor. Color matched Vandalproof Lens. Full 180° coverage.

Finish: ● Bronze ○ White

Good Night Light TUFF Dome

Good Night Light Hi/Lo Sensor. Runs lamps at 20% wattage dusk to dawn. Brightens to full power when sensor activates. 180 watt Incandescent maximum. Color matched Vandalproof Lens. Full 180º coverage.

Finish: ● Bronze ○ White

Good NIGHT LIGHT bright glow
Glows dusk-to-dawn
Bright when motion occurs

Tuff Dome won the NAED "Best of the Best" award.

Tuff Dome shown with QB1 Quartz Floods
See page 106.

Detection Pattern

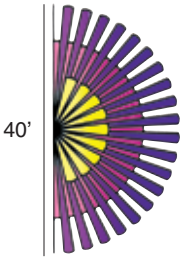

Double Look Down Lens

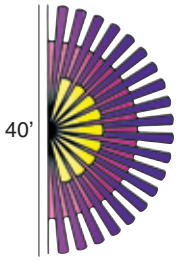

Double Look Down Lens

Catalog Numbers

Bronze	White	Bronze	White
STUFF500	STUFF500W	STUFF180HL	STUFF180HLW

Dimensions

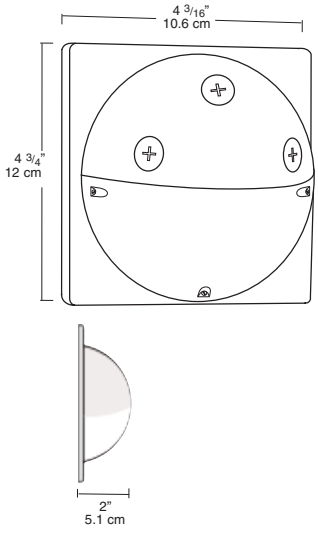

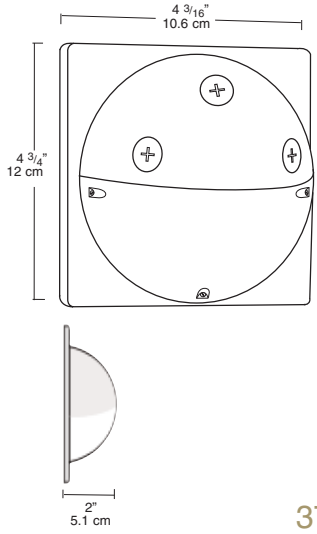

Small and durable Tuff Dome controls four lanterns on this home.

TEL 888 RAB 1000
FAX 888 RAB 1232
www.rabweb.com

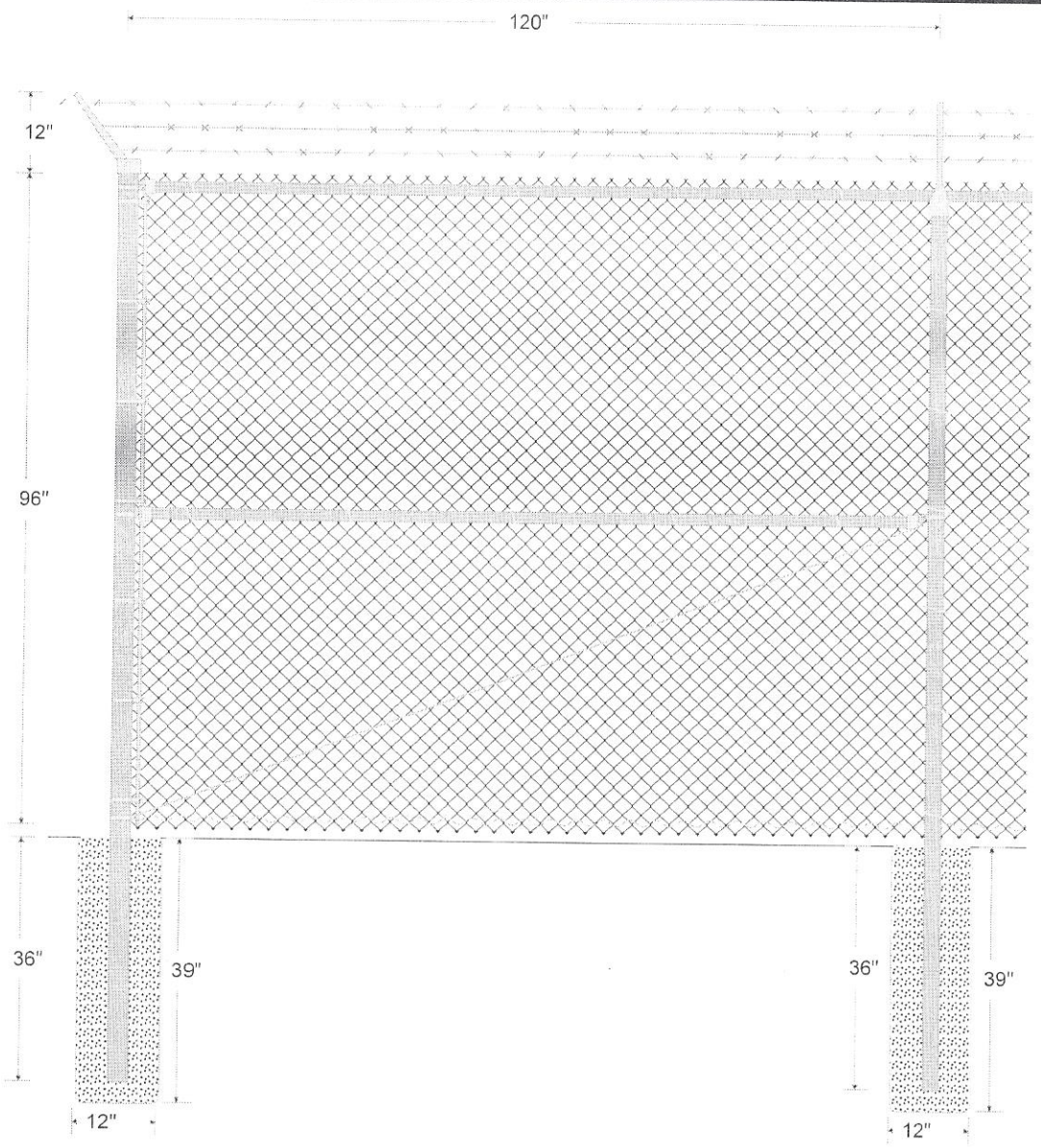

96" tall Chainlink Fabric with Barb / Knuckle Selvage and 2" Mesh Size.

1 32" tall, 2 7/8" diameter Terminal Post with 12" post footing diameter and 39" post footing depth.

1 32" tall, 2 3/8" diameter Line Post with 12" post footing diameter and 39" post footing depth.

Top of Fence has 1 5/8" diameter Top Rail.

Bottom of Fence has Coil Spring Tension Wire.

Fence is braced with 1 5/8" diameter Middle Brace & Truss.

3 Strands of Barb Wire with Corner Barb Wire Arms.

Line Post Spacing: 120"

Tie Wire Spacing is every 24" on Rails & Bracing.

MILD FENCE CO.
3465 Hwy 93 N.
Kalispell, MT 59901
406-755-7650

Sand Coulee Water System Improvements
Sand Coulee, MT

96" Chainlink Line of Fence w/Barbwire

Drawn: 11/3/2014
File:

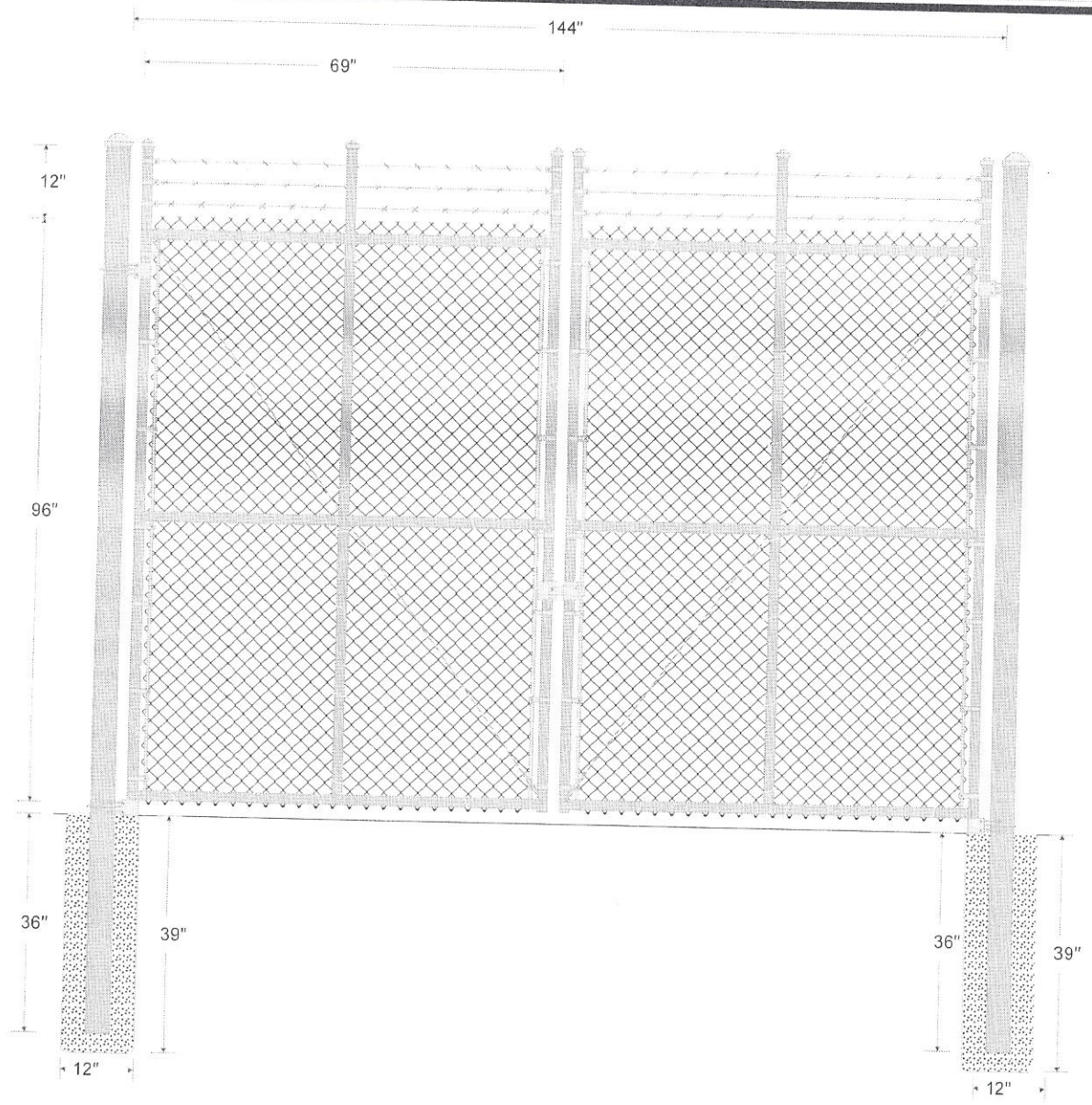

96" tall Chainlink Fabric with Barb / Knuckle Selvage and 2" Mesh Size.

144" tall. 4" diameter Gate Posts with 12" post footing diameter and 39" post footing depth.

The opening width of the Double Gate is 12'.

The gate frame is constructed with 1 5/8" pipe.

Gate is braced with 1 5/8" diameter Horizontal & Vertical Braces. Breaks are on Horizontals.

Gate is trussed with Truss Rod.. Trusses are braced per gate.

3 Strands of Barb Wire.

Gate is hung with Bulldog Hinges. Gate is secured with a Strong Arm Latch.

Tie Wire Spacing is every 24" on Rails.

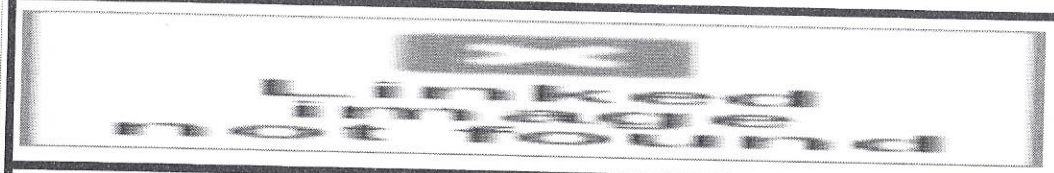

MILD FENCE CO.
3465 Hwy 93 N.
Kalispell, MT 59901
406-755-7650

Sand Coulee Water System Improvemet
Sand Coulee Montana, MT

96.5" X 12' Chainlink Double Drive Gate w/Barbwire

Drawn: 11/3/2014
File:

TMC SALES, INC.

21831 87th Avenue S.E.

Woodinville, WA 98072

Phone (425) 486-7473

Toll Free 1-800-447-7473

FAX (425) 486-8819

Certificate of Compliance

Chain Link Fence Fabric

GBW chain link fence fabric manufactured by TMC Sales, Inc. meets the following specification:

Chain Link Fence Fabric 9ga (0.148) and 11ga (.120)

ASTM Spec. - A-392 Class I (1.2oz zinc coating)
Fed. Spec. - RR-F-191/1D
AASHTO Spec. - M-181

Chain Link Fence Fabric 9ga (0.148)

ASTM Spec. - A-392 Class II (2.0oz zinc coating)
Fed. Spec. - RR-F-191/1D
AASHTO Spec. - M-181

Weaving Wire 9ga (0.148)

ASTM Spec. - A-817 Type II (hot-dipped zinc coated galvanizing)

Chain link fence manufactured by TMC Sales, Inc. meets DOT specifications for the following states:

California – Caltrans
Washington – WSDOT
Oregon – ODOT
Alaska – Alaska DOT

This material has been produced to the best industry practices and in all respects complies with industry standards. Manufactured in the U.S.A.

TMC SALES, INC.

Jay T. Zettervall
Vice President

COX FENCE FITTINGS

11324 RUSSELL RD
MESQUITE, TX
75180
972-288-7555
972-288-7577 FAX
cox.fence@yahoo.com

JUNE 02, 2014

LETTER OF CERTIFICATION

DEAR SIR OR MADAM:

THIS LETTER IS TO CERTIFY THAT THE FENCE FITTINGS WE PROVIDED FOR MERCHANTS METALS, COVERED BY THEIR PURCHASE ORDER/JOB NAME 1711569 ARE OF DOMESTIC ORIGIN, STAMPED FROM STEEL THAT WAS MELTED AND MANUFACTURED IN THE UNITED STATES, AND WILL MEET OR EXCEED THE FOLLOWING SPECIFICATION:

MADE IN THE U.S.A.

C. SCOTT HALEY

STATE OF TEXAS }{

}{

COUNTY OF DALLAS }{

SWORN TO AND SUBSCRIBED BEFORE ME AT MESQUITE, TEXAS, THIS 2ND DAY OF JUNE; 2014

LORRIE J. COOPER
MY COMMISSION EXPIRES
November 19, 2017

NOTARY PUBLIC IN AND FOR
DALLAS COUNTY, TEXAS

AMERISTAR®
FENCE PRODUCTS

Mild Fence
3465 Hwy 93 North
Kalispell, MT 59901

CERTIFICATE OF COMPLIANCE

All 1 5/8"O.D., 1 7/8"O.D, 2 3/8" O.D., and 2 7/8" O.D. GBR 40 framework shall be manufactured in accordance with commercial standards to meet the strength (50,000 psi minimum yield strength) and coating requirements of the following standards:

1) ASTM F1043, Group IC, Electric Resistance Welded Round Steel Pipe, heavy industrial weight.
2) M181, Type I, Grade 2, Electrical Resistance Welded Steel Pipe
3) RR-F-191/3, Class 1, Grade B, Electrical Resistance Welded Steel Pipe

All material is manufactured in Tulsa, Oklahoma, USA.

Please refer to the attached specification sheet for further detail.

Regards.

Beverly Murphy
Product / Sales Manager
Ameristar Fence Products

MASTER HALCO

5909 E. Sharp Ave.
Spokane, WA 99211

Tel: 509.535.0611
Fax: 509.534.2401

www.mhfence.com

Mild Fence Co.
3465 Hwy. 95 N
Kalispell, MT 59901

Re: 7ga Tension Wire

Gentlemen:

We hereby certify that the material we supply to you for stock is ordered to meet the following Federal and State specifications for Chain link fencing:

All Materials	RR-F-191J/Gen	ASTM Various
Tension Wire	RR-F-191/4C	ASTM A824

7ga Coil Spring 1.2 oz as manufactured by Deacero Wire

Sincerely,
MASTER HALCO, INC.

Christian Lundberg
Office Manager

BEKAERT
better together

Bekaert Corporation
1881 Bekaert Drive
Van Buren, AR 72956
T: (479) 474-5211
F: (479) 474-9075

Wutke, Llc Dba Mild Fence Co.
3465 Hwy. 93N
Kalispell, MT 59901

Date 7/15/2014

Subject: Product Code 701VB
SAP Number 118403 Represents 108 Rolls

Gentlemen:

This letter is to certify that the 12 ½ gauge, 4-Point Standard Class III Barbed Wire shipped on:

Delivery Number : 4060240985
Ship-To Number : 32522
Bill of Lading Number : N/A

was manufactured in the U.S.A. in accordance with ASTM A121 and has the following physical properties:

2/4/5 Std. Barb Wire	Line Wires
Diameter	.099" +/- .002"
Tensile	90 KSI Min.
Zinc Weight	.80 oz/sq. ft. Min.

Certified By,

BEKAERT CORPORATION

David Berta
Quality Engineer

Barbara A Capps
Notary Public

June 18, 2016
Commission Expires

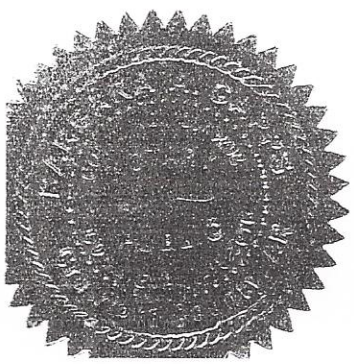

Detail Bill of Material

Project Name: Sand Coulee WTP
General Order No:
Negotiation No: D3841015X4K2
Alternate No: 0000

Item No.	Qty	Product	Description
	1	Dry Type Transformers	Transformer Type: General Purpose Encapsulated 1 Phase, 15 KVA, 1 K-Factor 240 X 480 Primary Volts 120/240 Secondary Volts 115C Temperature Rise Aluminum Winding Material OSHPD Compliant (verify mounting method in OSP) NEMA 3R Encapsulated Enclosure Type 60 HZ

Catalog No S20N11S15N
Designation

Qty	List of Materials
1	1 Phase, 15 KVA, 240 X 480 Primary Volts, 120/240 Secondary Volts, 115C Temperature Rise, Aluminum Winding Material, 60 HZ

Item No.	Qty	Product	Description
	1	Safety Switches	Safety Switches

Catalog No DH365URK
Designation 400A NF DISC

Qty	List of Materials
1	Ground Lug Kit : DS468GK (Field Installed)
1	Neutral / Ground Kit : DS400NK (Field Installed)
1	Heavy Duty Switch - Non-Fusible, 3-Pole, 600 VAC, 400 A, NEMA 3R

Item No.	Qty	Product	Description
	1	Safety Switches	Safety Switches

Catalog No DT365URK
Designation MTS

Qty	List of Materials
1	Ground Lug Kit : DS468GK (Field Installed)
1	Neutral / Ground Kit : DT400NK (Field Installed)
1	Double Throw Switch - Non-Fusible, 3-Pole, 600 VAC, 400 A, NEMA 3R

Item No.	Qty	Product	Description
	1	SPD	Side Mounted SPDs: CVX Series, 100 kA, 480Y, 277/480V Wye (4W+G), NEMA 4X Enclosure, Basic Package

Catalog No CVX100-480Y
Designation TVSS

Qty	List of Materials
1	CVX, 100 kA, 480Y, NEMA 4X Enclosure

Eaton Selling Policy 25-000 applies.

Project Name:	Sand Coulee WTP	**Negotiation No:**	D3841015X4K2
General Order No:		**Alternate No:**	0000

All orders must be released for manufacture within 90 days of date of order entry. If approval drawings are required, drawings must be returned approved for release within 60 days of mailing. If drawings are not returned accordingly, and/or if shipment is delayed for any reason, the price of the order will increase by 1.0% per month or fraction there of for the time the shipment is delayed.

Dry-Type Transformers General Information

- Standard Transformer Catalog Number: S20N11S15N
- Transformer Type: General Purpose Encapsulated
- Phase: 1
- kVA: 15
- Primary Volts: 240 X 480
- Secondary Volts: 120/240
- Temperature Rise: 115C
- Winding Material: Aluminum
- Enclosure Type: NEMA 3R Encapsulated
- Frequency (Hz): 60
- Easy Install: N
- Frame: 180
- Wiring Diagram: 3A
- Weight (lbs.): 210
- Impedance (%): 1.9
- UL Listed: Y
- OSHPD Compliant (verify mounting method in OSP): Y

Standard Values

- K-Factor: 1
- TAPS: None
- Sound Reduction (dB): 0
- NEMA ST20 Sound Level (dB): 50
- NEMA TP-1 Energy Efficient: N
- Infrared Viewing Window: None

Field-Installed Accessories Included

- Lug Kit: Not Included

The information on this document is created by Eaton. It is disclosed in confidence and it is only to be used for the purpose in which it is supplied.

	PREPARED BY: KENT BUTTERFIELD	DATE: 10/15/2014	**Eaton**		
	APPROVED BY	DATE	JOB NAME: Sand Coulee WTP		
			DESIGNATION		
	VERSION: 1.0.0.1		TYPE: Dry-Type Transformer	DRAWING TYPE: Customer Appr.	
NEG-ALT Number: D3841015X4K2-0000	REVISION: 0	DWG SIZE: A	G.O.	ITEM	SHEET: 1 of 1

REF.
DWG NO 7074C18H03

NOTES:
1. TYPE EP GENERAL PURPOSE TRANSFORMER.
2. SINGLE PHASE RESIN ENCAPSULATED.
3. SUITABLE FOR INDOOR/OUTDOOR APPLICATIONS.
4. COPPER OR ALUMINUM WINDINGS. 180°C INSULATION SYSTEM WITH 115°C RISE; OPTIONAL AS 80°C RISE.
5. ALL UNITS ARE DESIGNED IN ACCORDANCE WITH APPLICABLE NEMA, UL, CSA, ANSI AND IEEE STANDARDS.

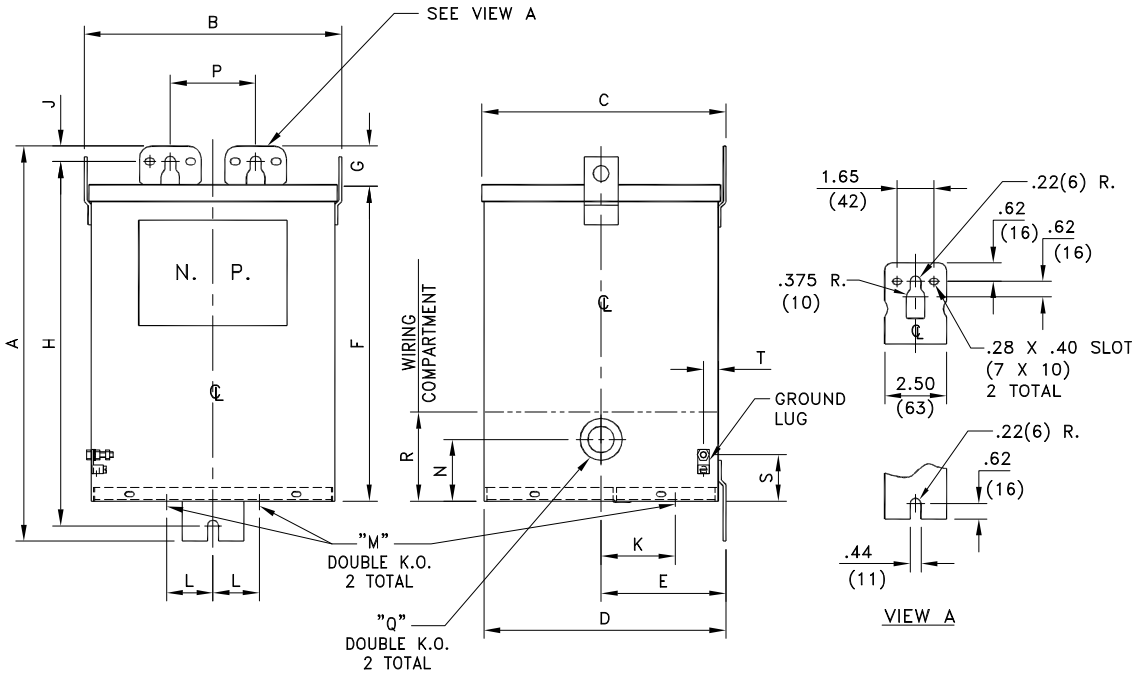

DIMENSIONS IN in(mm)

FRAME	APPROX. NET WT LBS(KG) ALUMINUM	COPPER	A	B	C	D	E	F	G	H	J
FR180	216(98)	237(108)	19.00(483)	13.38(340)	10.52(267)	10.46(266)	5.43(138)	15.82(402)	1.63(41)	17.75(451)	.63(16)
			K	L	M		N	P	Q		R
			3.38(86)	1.88(48)	.75, 1.25 (19, 32)		2.50(64)	3.46(88)	1.00, 1.50 (25, 38)		3.75(95)
										S	T
										2.00(51)	.65(17)

THIS DIMENSION DRAWING IS FOR REFERENCE ONLY. IT IS NOT TO BE REGARDED AS INDICATING THE EXACT DETAILS OF CONSTRUCTION.

Rev3 –MAY/08

THE INFORMATION ON THIS DOCUMENT IS CREATED BY CUTLER–HAMMER. IT IS DISCLOSED IN CONFIDENCE AND IS ONLY TO BE USED FOR THE PURPOSE IN WHICH IT IS SUPPLIED.

DFTR	DATE	Cutler–Hammer	Juarez, Mexico
JJF	08/14/00		
APPD	DATE	TITLE EPT DRY TYPE OUTLINE	
CS	08/17/00		
S.O.		TYPE TRANSFORMER	
FEDERAL ID NO 88725	PRODUCT CODE TRANSFORMER	REVISION 03 / DWG SIZE A	G.O. / DWG FR180 / SHEET 01 OF 01

GO/NEG-Alt-Date:	Job Name:
D3841015X4K2-0000-10/15/2014	Sand Coulee WTP
Item Number:	**Catalog Number:** S20N11S15N / **Designation:**

FIGURE 3A

WDG	VOLTS	CONNECT	LINE
PRI	480	H2–H3	H1–H4
	240	H1H3–H2H4	H1–H4
SEC	240	X2–X3	X1–X4
	120	X1X3–X2X4	X1–X4
	120/240	X2–X3 *	X1–X3–X4

*THREE WIRE OPERATION

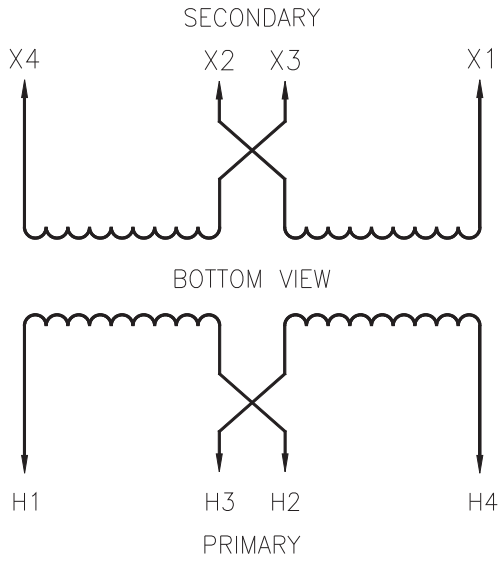

Cutler-Hammer

EATON

GO/NEG-Alt-Date:		Job Name:
D3841015X4K2-0000-10/15/2014		Sand Coulee WTP
Item Number:	**Catalog Number:** S20N11S15N	**Designation:**

Safety Switch General Information

Global Specifications

System Voltage	600 VAC
Switch Type	Single Throw - Heavy Duty
Poles/Blades	3-Pole
Amperage	400
Protection	Non-Fusible with No Neutral
Enclosure Type	NEMA 3R
Switch Lugs	Standard
Fungus Proof Treatment	N
Lock-On Provision	N
Fuse Pullers	N
Control Pole	N
Ground Lugs	N
316 Stainless	N
Stainless Mechanism	N
Mill Duty	N

Nameplate

Field Installed Kits

QUANTITY	DESCRIPTION
1	Neutral / Ground Kit : DS400NK (Field Installed)
1	~~Ground Lug Kit : DS468GK (Field Installed)~~

Safety Switch Catalog No.

DH365URK

The information on this document is created by Eaton Corporation. It is disclosed in confidence and it is only to be used for the purpose in which it is supplied.

PREPARED BY: KENT BUTTERFIELD	DATE: 10/15/2014	**Eaton**			
APPROVED BY:	DATE:	JOB NAME: Sand Coulee WTP			
		DESIGNATION: 400A NF DISC			
VERSION: 1.0.0.1		TYPE: Safety Switch General Information		DRAWING TYPE: Customer Appr.	
NEG-ALT Number: D3841015X4K2-0000	REVISION: 0	DWG SIZE: A	G.O.	ITEM	SHEET: 1 of 1

Date PDF Generated:9/25/2012 Page: 1 of 1

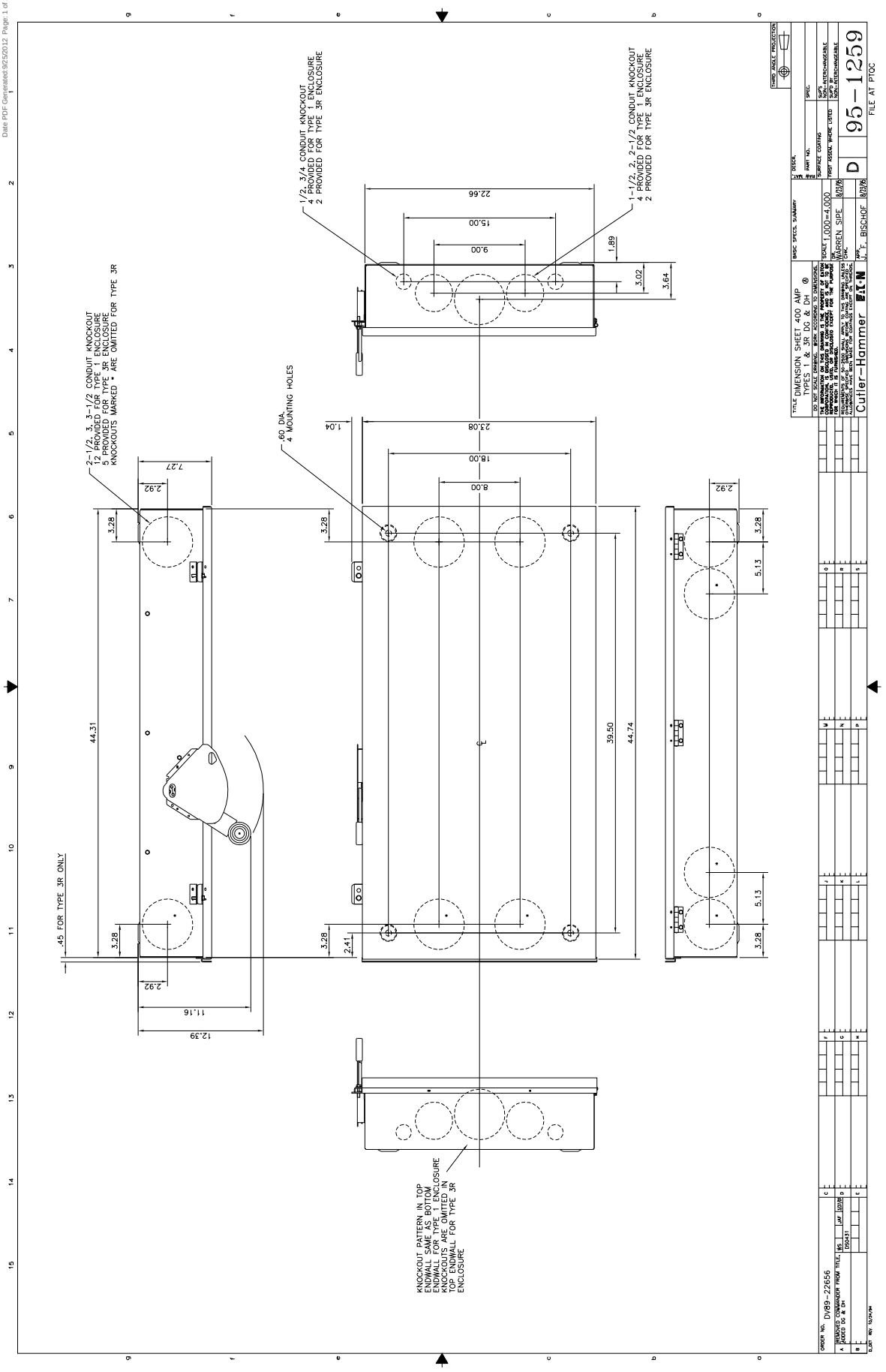

GO/NEG-Alt-Date:		Job Name:
D3841015X4K2-0000-10/15/2014		Sand Coulee WTP
Item Number:	**Catalog Number:**	**Designation:**
	DH365URK	400A NF DISC

Safety Switch General Information

Global Specifications

System Voltage	600 VAC
Switch Type	Double Throw - Heavy Duty
Poles/Blades	3-Pole
Amperage	400
Protection	Non-Fusible with No Neutral
Enclosure Type	NEMA 3R
Switch Lugs	Standard
Fungus Proof Treatment	N
Lock-On Provision	N
Fuse Pullers	N
Control Pole	N
Ground Lugs	N
316 Stainless	N
Stainless Mechanism	N
Mill Duty	N

Nameplate

Field Installed Kits

QUANTITY	DESCRIPTION
1	Neutral / Ground Kit : DT400NK (Field Installed)
1	~~Ground Lug Kit : DS468GK (Field Installed)~~

Safety Switch Catalog No.

DT365URK

The information on this document is created by Eaton Corporation. It is disclosed in confidence and it is only to be used for the purpose in which it is supplied.	PREPARED BY: KENT BUTTERFIELD	DATE: 10/15/2014	**Eaton**		
	APPROVED BY:	DATE:	JOB NAME: Sand Coulee WTP		
			DESIGNATION: MTS		
	VERSION: 1.0.0.1		TYPE: Safety Switch General Information	DRAWING TYPE: Customer Appr.	
NEG-ALT Number: D3841015X4K2-0000	REVISION: 0	DWG SIZE: A	G.O.	ITEM	SHEET: 1 of 1

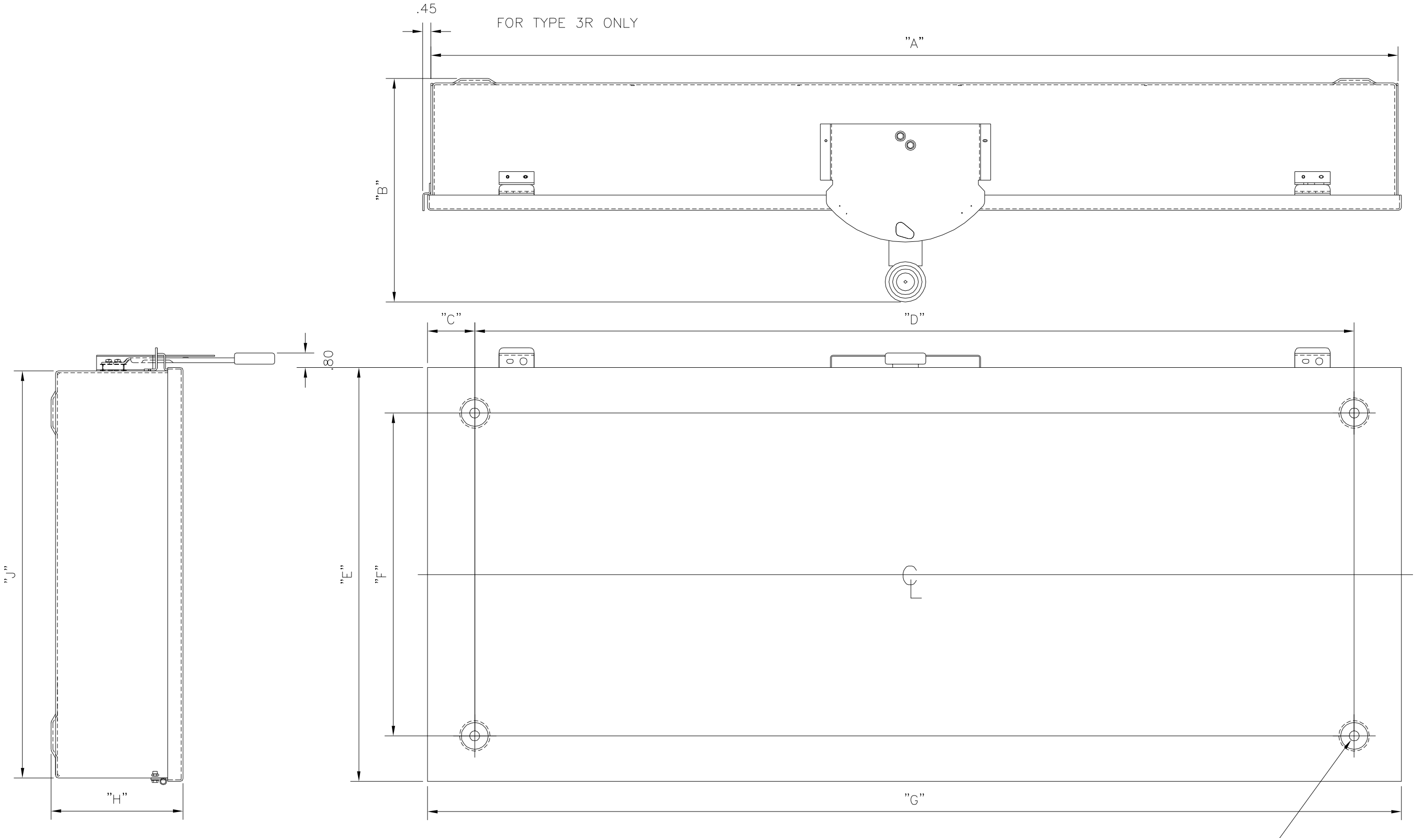

FIG. NO.	A	B	C	D	E	F	G	H	J	DESCRIPTION
5	63.31	14.12	2.38	58.50	27.44	22.25	63.75	8.88	27.00	400-600 AMP 4 POLE N.F., 800 AMP N.F., TYPE 1 & 3R
3	74.31	14.12	2.38	69.50	25.34	20.25	74.73	8.88	24.90	400 AMP, FUS., TYPE 1 & 3R
2	63.31	14.12	2.38	58.50	24.08	19.00	63.75	8.88	23.66	600 AMP, N.F., TYPE 1 & 3R
1	53.80	12.50	2.38	49.00	23.08	18.00	54.25	7.25	22.66	400 AMP, N.F., TYPE 1 & 3R

REVISION DV89-22585

Description	Rev	By	Chk	ECO	Date
REVISED DESCRIPTION OF FIG'S 2 & 5	D1	WCS	RP	DS1383	11/12/08
REVISED DESCRIPTION OF FIG. NO. 5	E1	WCS	RP	DS1417	1/30/09
ADDED "& 3R" TO FIG. 5 DESCRIPTION	F1	WCS	RP	DS1590	3/26/10
REMOVED FIG. NO. 4	G1	WCS	RP	ECO-054985	10/2/13

UNLESS OTHERWISE SPECIFIED
DIMENSIONS IN INCHES
ONE PLACE DEC ±0.1
TWO PLACE DEC ±0.02
THREE PLACE DEC ±0.005
ANGLES ±0.5
VOLTAGE ±5%
RESISTANCE ±10%
AMPERAGE ±2%
FORCE,TORQUE,SPEED ±10%
TIME ±1%
TEMPERATURE ±3°C/±5°F
DIMENSIONS TO BE INTERPRETED IN ACCORDANCE WITH ASME Y14.5M-1994
(XXXXX) SYMBOL DEFINITIONS PER DRAWING 65A2750
THIRD ANGLE PROJECTION

DRAFTER/DESIGNER: EDDIE CARSON DATE: 1/5/90
APPD: J.F. BISCHOF DATE: 1/12/90
APPD DATE
ENGR REF
NEXT ASSY
TOOL REF
DSPEC

EATON CORPORATION - CONFIDENTIAL AND PROPRIETARY

NOTICE TO PERSONS RECEIVING THIS DOCUMENT AND/OR TECHNICAL INFORMATION THIS DOCUMENT, INCLUDING THE DRAWING AND INFORMATION CONTAINED THEREON, IS CONFIDENTIAL AND IS THE EXCLUSIVE PROPERTY OF EATON CORPORATION, AND IS MERELY ON LOAN AND SUBJECT TO RECALL BY EATON AT ANY TIME. BY TAKING POSSESSION OF THIS DOCUMENT, THE RECIPIENT ACKNOWLEDGES AND AGREES THAT THIS DOCUMENT CANNOT BE USED IN ANY MANNER ADVERSE TO THE INTERESTS OF EATON AND THAT NO PORTION OF THIS DOCUMENT MAY BE COPIED OR OTHERWISE REPRODUCED WITHOUT THE PRIOR WRITTEN CONSENT OF EATON. IN THE CASE OF CONFLICTING CONTRACTUAL PROVISIONS, THIS NOTICE SHALL GOVERN THE STATUS OF THIS DOCUMENT.

EATON

TITLE: SAFETY SWITCHES
DT TYPE 1 & 3R 400, 600, & 800 AMP
DIMENSION SHEET

SIZE: C FILENAME: 95-1065.DWG DWG NO: 95-1065
SCALE: 1=4 PARTS LIST PRODUCT: B090 SHEET NO: 1 OF 1 REV: G1

© 2008 Eaton Corporation, All Rights Reserved

EAD_ACAD_FRMC1
REV. 06/04/08

GO/NEG-Alt-Date:		Job Name:
D3841015X4K2-0000-10/15/2014		Sand Coulee WTP
Item Number:	Catalog Number: DT365URK	Designation: MTS

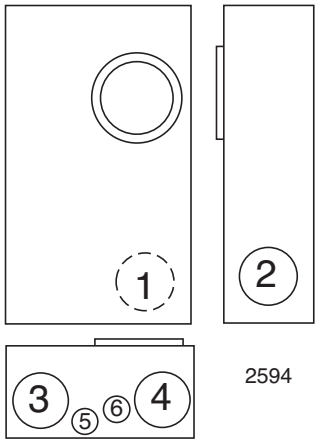

2594

320 AMP—7 TERMINAL—SIDE WIREWAY—RINGLESS

AMP	SERVICE	CATALOG NUMBER	HUB	CONNECTORS CU/AL	BY-PASS	DIMENSIONS			CONCENTRIC K.O.'S					
						D"	W"	H"	1	2	3	4	5	6
320	OH/UG	**U2594-X**	C.P.	3/8"-16 STUDS	LEVER	6 1/2	19	34 1/8	—	3	4	4	1/4	1/2,3/4,1

HUBS: For proper hub selection see the hub suffix chart on the accessory page.

CONNECTORS: Extruded aluminum connectors are tin plated. For single lug connector kit order as extra: **K1539** (350 kcmil) or **K1540** (600 kcmil). For twin lug connectors: **K1350** (350 kcmil). Order two kits to cover both line and load on sockets not supplied with line connectors. **NOTE**: For single lug connector kits for the **U2594** unit, order as extra **K3082** (350 kcmil) or **K3441** (600 kcmil). For twin lug connectors order as extra: **K3442** (350 kcmil). Separate kits are required for both line and load.

Utility requirements for this equipment may vary. Always consult the serving utility for their requirements before ordering or installing equipment in this catalog.

INTERCHANGEABLE UNIT HUBS

LARGE "R" OPENING (HEAVY DUTY)

SUFFIX	SIZE	MILBANK NO.
F	3″	**A8110**
G	3½″	**A8111**
H	4″	**A8112**

SMALL "RL" OPENING (STANDARD)

SUFFIX	SIZE	MILBANK NO.
WL	1″	**A7514**
YL	1¼″	**A7515**
ZL	1½″	**A7516**
DL	2″	**A7517**
EL	2½″	**A7518**

HUB ADAPTER PLATE
(Converts 4″ opening to 2½″)
S8324

REMOVABLE HUB CLOSING PLATE

DESCRIPTION	SUFFIX	CAT. #
STANDARD (for -RL opening)	**-XL**	**A7551**
LARGE (for -R opening)	**-X**	**A9064**

ANTI-INVERSION CLIP

K4802

BYPASS LINK

K8180
(Bypass links sold in pairs)

ISOLATED NEUTRAL KIT

K1047

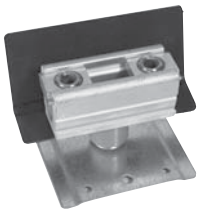

CONNECTOR KITS

For use with 3/8"-16 stud type units only

SINGLE

SUFFIX	CATALOG #	(3 per set) – 1 Ø
K1	**K1539**	6-350 kcmil
K3	**K1540**	4-600 kcmil or (2) 1/0-250 kcmil
K3L	**K1540L**	4-600 kcmil or (2) 1/0-250 kcmil Non-rotating

SUFFIX	CATALOG #	(4 per set) – 3 Ø
K5	**K3082**	6-350 kcmil
K7	**K3441**	4-600 kcmil or (2) 1/0-250 kcmil

TWIN

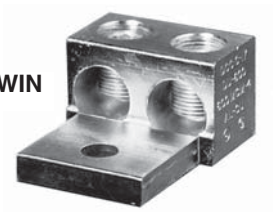

SUFFIX	CATALOG #	(3 per set) – 1 Ø
K2	**K1350**	6-350 kcmil
K2L	**K1350L**	6-350 kcmil Non-rotating
K4	**K1541**	4-600 kcmil

SUFFIX	CATALOG #	(4 per set) – 3 Ø
K6	**K3442**	6-350 kcmil
K8	**K3083**	4-600 kcmil

LOAD TAP CONNECTORS (3 per set)

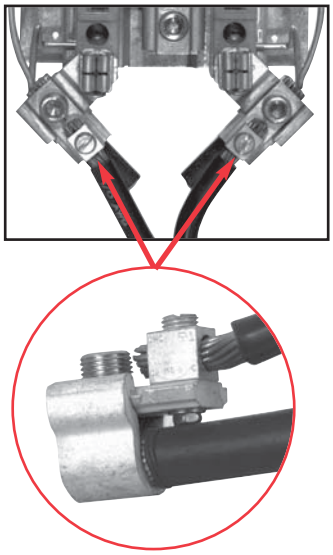

Replaces the **load side** slide-in nut assembly on Milbank 200 amp sockets. Allows for a 100 amp tap location in addition to the #6-350 kcmil load-side connector. **K5022** Includes Safety Barrier Extensions– for applications over 300 VAC.

K4977-INT
INTERNAL HEX
K5022-INT
INTERNAL HEX

Utility requirements for this equipment may vary. Always consult the serving utility for their requirements before ordering or installing equipment in this catalog.

www.king-electric.com

unit heater

KB SERIES

LARGE AREA / 2000 - 66,000 WATTS / CEILINGS UNDER 12 FT

E41422 LR43323-2

All New Design!

FEATURES:

- Spiral Steel Fin Element
- Cast Iron Motor
- Aluminum Fan Blade

- Heavy gauge Steel enclosure
- Adjustable discharge louvers
- Totally enclosed motor
- Control options
- Auto-reset thermal cutout
- Tested under UL1278

OPTIONS:

- 1-Pole or 2-Pole thermostat
- Two stage thermostat (single phase only)
- Summer fan switch
- 3-Position switch (Heat-Off-Fan)
- Pilot light (power On indication)
- Door interlocking disconnect
- Wall mounted thermostat
- Stainless Steel (refer to index)

Convenient, small and powerful are great words that describe our unit heaters. They have been standard equipment in highrise buildings, garages, water treatment and fire room vaults to prevent freezing. Other applications are residential garages and warehouse heating. High-mass steel elements and high CFM keep outlet temperatures low for long life.

Under 6kW use the KBP Series for higher outlet temperatures where needed. Long life comes standard with the highest quality components custom designed for use in the KB Series unit heater.

Freeze/moisture protection in a generator vault

ENGINEERING SPECIFICATIONS:

Contractor shall supply and install KB Series unit heaters manufactured by King Electrical Mfg. Company. Heaters shall be of the wattage and voltage as indicated on the plans.

Construction: All exterior and interior metal enclosure parts are made from 20 gauge electrogalvanized Steel with a rust inhibiting baked enamel finish. Smooth rounded corners and protective edge trim give an attractive modern appearance.

Adjustable Outlet Louver: Louvers direct air up or down as needed for the heating application.

Rear Intake Screen: Heavy gauge steel screen protects against foreign objects making accidental contact with the rotating fan blade.

Spiral Fin Elements: The metal sheath element is brazed with spiral fins then molded in to a coil configuration. This combination produces the best heat transfer while eliminating the potential for hot spots by positioning the element in the maximum airflow stream.

Totally Enclosed Fan Motor: Permanently lubricated cast iron with 20cc of oil. Epoxy-coated motor with enclosed rotor resists moisture and corrosion for long-lasting, trouble-free operation.

Aluminum Fan Blade: Axial flow-type fan mounted directly to the motor shaft for maximum efficiency.

Auto-Reset Thermal Cutout: Power is disconnected from the element if an overheated condition occurs. The fan continues to run to dissipate excess heat from the element. The element is re-energized automatically when the normal operating temperature returns.

Internal Controls: Magnetic contactors are standard on all 480V heaters, all 208V/1-Phase, 240V/1-Phase, 277V/1-Phase heaters above 6kW, and all 3-Phase heaters. The control voltage is equal to the line voltage (208, 240 or 277) except for 480V models where a transformer is provided for 24V control. Over 5kW the line voltage control is operating the contactor coil only and will draw only 1 Amp. See page 64 for control voltages.

Fusing: Internal circuit fusing is provided when the heater ampacity exceeds 48 Amps to comply with N.E.C. standards. A fan delay is provided standard on models 12.5-kW and above to dissipate residual heat from the heating elements.

Easy Installation: A quick access panel located on the bottom of the heater allows for quick wiring and easy maintenance for the life of the heater.

Approvals: UL (E41422), cCSAus (LR43323-2)

FACTORY INSTALLED OPTIONS:

Power Contactor: Standard on heaters above 5kW and on all 3-Phase models; optional on 2 to 5kW 1-Phase heaters.

24 Volt Control: Standard on 480V heaters; optional on all other heaters.

Mounting: Available universal or low profile ceiling bracket made from heavy gauge Steel.

Rough Service: 5 lugs are provided to securely mount heater in heavy industrial applications or marine vessels where vibration and movement are a concern. Includes 5-hole bracket.

Other Control Options:

- 1-Pole or 2-Pole thermostat temperature indicated label with 44°F energy code setting
- Built-in two-stage thermostat on single phase heaters
- Summer fan switch
- 3-position switch (Heat-Off-Fan)
- Pilot light (power On indication)
- Door interlocking disconnect
- Wall-mounted thermostat line or low voltage

NOTE: Multiple heaters can be controlled by a single thermostat if phasing is coordinated in the control wiring.

MODEL CODE:

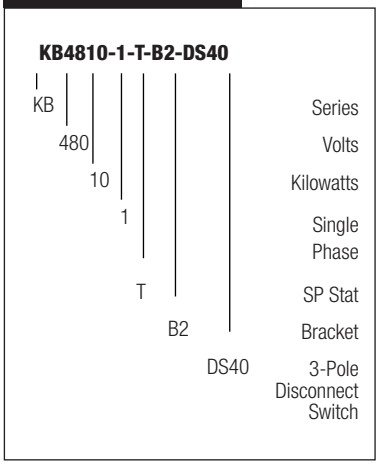

QUICK SELECTION CHART:

KILOWATTS	PHASE	208V		240V		277V		480V	
		MODEL	UPC #093319 PART #	MODEL	UPC #093319 PART #	MODEL	UPC #093319 PART #	MODEL	UPC #093319 PART #
4	1	KB2004-1	15012	KB2404-1	15010	KB2704-1	15204	KB4804-1	15015
5	1	KB2005-1	15224	KB2405-1	15018	KB2705-1	15206	KB4805-1	15021
	3	KB2005-3MP	15228	KB2405-3MP	15075			KB4805-3MP	15105
6	1			KB2406-1	15024	KB2706-1	15208	KB4806-1	15027
	3			KB2406-3MP	15078			KB4806-3MP	15108
7.5	1	KB2007-1	15029	KB2407-1	15030	KB2707-1	15209	KB4807-1	15033
	3	KB2007-3MP	15233	KB2407-3MP	15079			KB4807-3MP	15109
9	1					KB2709-1	15212		
	3			KB2409-3MP	15081			KB4809-3MP	15111
10	1	KB2010-1	15226	KB2410-1	15042	KB2710-1	15214	KB4810-1	15045
	3	KB2010-3MP	15230	KB2410-3MP	15082			KB4810-3MP	15113
12.5	1	KB2012-1	15227	KB2412-1	15054	KB2712-1	15216	KB4812-1	15057
	3	KB2012-3MP	15235	KB2412-3MP	15087			KB4812-3MP	15117
15	1	KB2015-1	15229	KB2415-1	15064	KB2715-1	15221	KB4815-1	15065
	3	KB2015-3MP	15232	KB2415-3MP	15090			KB4815-3MP	15120
18	3			KB2418-3	15093			KB4818-3MP	15123
20	3	KB2020-3	15237	KB2420-3	15094			KB4820-3MP	15122
25	3	KB2025-3	15239	KB2425-3	15100			KB4825-3	15130
30	3	KB2030-3	15223	KB2430-3	15101			KB4830-3	15162
33	3			KB2433-3	15138			KB4833-3	15165
40	3	KB2040-3	15225	KB2440-3	15103			KB4840-3	15169
50	3	KB2050-3	15241	KB2450-3	15148			KB4850-3	15175
60	3	KB2060-3	15243	KB2460-3	15153			KB4860-3	15180

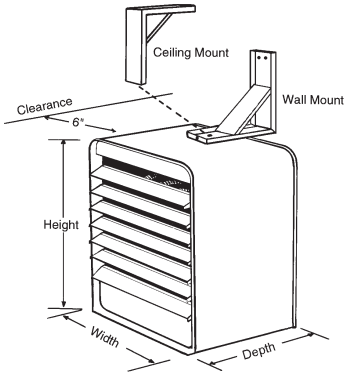

HEATER SIZE	DIMENSIONS		
	HEIGHT	DEPTH	WIDTH
A	16.5"	11"	15"
B	16.5"	18"	15"
C	18.5"	11"	15"
D	18.5"	18"	15"
E	20.5"	18"	15"
F	18.5"	18"	30"
G	20.5"	18"	30"

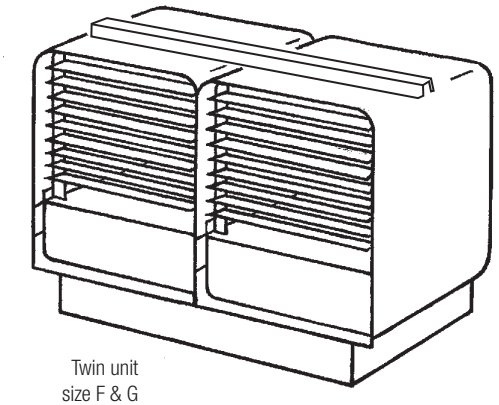

Twin unit
size F & G

SINGLE PHASE TECHNICAL DATA

380V-3Ø heaters are available in most kW ratings

CATALOG #	UPC #093319 PART #	KILOWATTS	BTUH (000)	PHASE	VOLTS	AMPS	**THERMOSTAT CONTROL VOLTAGE	MOTOR HP	CFM	TEMP. RISE (°F)	AIR THROW	MAXIMUM MOUNTING HEIGHT	*SIZE	WT. (lbs.)
KB2004-1 KB2404-1 KB2704-1 KB4804-1	15012 15010 15204 15015	4	13.5	1	208 240/208 277 480	19.2 16.6/14.4 14.4 8.3	208 240 277 24	5 Watt	400	38°	15 ft.	8 ft.	A	28.5 28.5 25 28
KB2005-1 KB2405-1 KB2705-1 KB4805-1	15224 15018 15206 15021	5 / 3.3	17	1	208 240/208 277 480	24 20.8/18 18.1 10.4	208 240 277 24	9 Watt	400	40°	16 ft.	8 ft.	A	28.5 28.5 25 28
KB2406-1 KB2706-1 KB4806-1	15024 15208 15027	6	20.5	1	240/208 277 480	25/21.6 21.6 12.5	240 277 24	9 Watt	400	45°	16 ft.	8 ft.	B	28.5 29 32
KB2007-1 KB2407-1 KB2707-1 KB4807-1	15029 15030 15209 15033	7.5	25.6	1	208 240/208 277 480	36.1 31.2/27 27 15.6	208 240 277 24	16 Watt	600	40°	20 ft.	9 ft.	C C D C	29 28.5 29 32
KB2010-1 KB2410-1 KB2710-1 KB4810-1	15226 15042 15214 15045	10	34.1	1	208 240/208 277 480	48.1 41.6/36.1 36.1 20.8	208 240 277 24	25 Watt	725	44°	24 ft.	10 ft.	B	34 42 42 35
KB2012-1 KB2412-1 KB2712-1 KB4812-1	15227 15054 15216 15057	12.5	42.7	1	208 240/208 277 480	60.1 52/45.1 45.1 26	208 240 277 24	35 Watt	825	48°	30 ft.	11 ft.	B	32 32 42 35
KB2015-1 KB2415-1 KB2715-1 KB4815-1	15229 15064 15221 15065	15	51.2	1	208 240/208 277 480	72.1 62.5/54.1 54.2 31.3	208 240 277 24	35 Watt	925	51°	33 ft.	12 ft.	B	37 37 37 40

*Refer to DIMENSIONS Chart

Dual rated heaters will draw 13% less amps 25% less wattage when operated on 208 Volts.

Note: Consult factory for special wattages and/or voltages.

Rated kW load tolerance of plus 5% minus 10%.

****Over 5 kW line voltage control is operating the contactor coil only, and will draw under 1 Amp.**

3-PHASE TECHNICAL DATA CHART:

380V-3Ø heaters are available in most kW ratings

CATALOG #	UPC #093319 PART #	KILOWATTS	BTUH (000)	PHASE	VOLTS	AMPS		**THERMO-STAT CONTROL VOLTAGE	MOTOR HP	CFM	TEMP. RISE (°F)	AIR THROW	MAXIMUM MOUNTING HEIGHT	*SIZE	WT. (lbs.)
						1-PH	3-PH								
KB2005-3MP KB2405-3MP KB4805-3MP	15228 15075 15105	5	17.1	1-3	208 240/208 480	24 20.8/18 10.4	13.9 12/10.4 6	208 240 24	9 Watt	400	40°	16 ft.	8 ft.	B	32 32 46.5
KB2007-3MP KB2407-3MP KB4807-3MP	15233 15079 15109	7.5	25.6	1-3	208 240/208 480	36.1 31.2/27 15.6	20.8 18/15.6 9	208 240 24	16 Watt	600	40°	20 ft.	9 ft.	B	42 42 46
KB2009-3MP KB2409-3MP KB4809-3MP	15135 15081 15111	9	30.7	1-3	208 240-208 480	43.2 37.5/32.5 18.7	24.9 21.6/18.7 10.8	208 240 24	25 Watt	725	42°	24 ft.	9 ft.	B	42 42 45
KB2010-3MP KB2410-3MP KB4810-3MP	15230 15082 15113	10	34.1	3 1-3 1-3	208 240/208 480	41.6/36.1 20.8	27.7 24/20.8 12	208 240 24	25 Watt	725	44°	24 ft.	10 ft.	B	42 42 45
KB2012-3MP KB2412-3MP KB4812-3MP	15235 15087 15117	12.5	42.7	3 3 1-3	208 240/208 480	 26	34.6 30/26 15	208 240 24	35 Watt	825	48°	30 ft.	11 ft.	B	42 42 45
KB2015-3MP KB2415-3MP KB4815-3MP	15232 15090 15120	15	51.2	3 3 1-3	208 240/208 480	 31.2	41.6 36/31.2 18	208 240 24	35 Watt	925	51°	33 ft.	12 ft.	B	46 46 49
KB2418-3 KB4818-3MP	15093 15123	18	61.4	3 1-3	240/208 480	 37.5	43.3/37.5 21.6	240 24	35 Watt	925	55°	33 ft.	12 ft.	B	46 49
KB2020-3 KB2420-3 KB4820-3MP	15237 15094 15122	20	68.3	3 3 1-3	208 240/208 480	 41.6	55.5 48.1/41.6 24	208 240 24	50 Watt	1100	57°	37 ft.	13 ft.	D	46 46 49
KB2025-3 KB2425-3 KB4825-3	15239 15100 15130	25	85.3	3	208 240/208 480		69.4 60.1/52.1 30.1	208 240 24	¼ hp 50 Watt	1350	58°	41 ft.	14 ft.	E D	48 48 51
KB2030-3 KB2430-3 KB4830-3	15223 15101 15162	30	102.4	3	208 240/208 480		83.3 72.1/62.5 36.1	208 240 24	¼ hp	1800	53°	48 ft.	15 ft.	E	49 49 64
KB2433-3 KB4833-3	15138 15165	33	113	3	240/208 480		79.3/68.8 39.7	240 24	¼ hp	1800	53°	48 ft.	15 ft.	E	49 52
KB2040-3 KB2440-3 KB4840-3	15225 15103 15169	40	136.5	3	208 240/208 480		111 96.2/83.3 48.1	208 240 24	(2) 50 Watt	2200	57°	53 ft.	15 ft.	F	100 100 110
KB2050-3 KB2450-3 KB4850-3	15241 15148 15175	50	170.6	3	208 240/208 480		138.8 120.2/104.2 60.1	208 240 24	(2) 50 Watt	2400	65°	58 ft.	15 ft.	F	103 103 113
KB2460-3 KB4860-3	15153 15180	60	204.8	3	240/208 480		144.3/125 72.2	240 24	(2) ¼ hp	2700	70°	65 ft.	18 ft.	G	105 115
KB2466-3 KB4866-3	15156 15183	66	225	3	240/208 480		158.7/137.6 79.5	240 24	(2) ¼ hp	2700	70°	65 ft.	18 ft.	G	105 115

*Refer to DIMENSIONS Chart

Heater will draw 13% less Amps 25% less wattage.

Note: Consult factory for special wattages and/or voltages.

Rated kW load tolerance of plus 5% minus 10%.

****Over 5 kW line voltage control is operating the contactor coil only, and will draw under 1 Amp.**

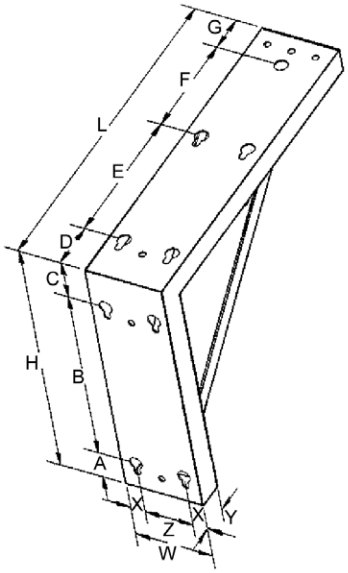

KBB-1 & KBB-2 - Unit heater brackets can be used for mounting on ceiling or wall. 3/8" threaded hole on top of unit heater can also be used with threaded rod to drop unit closer to floor.

BRACKET SELECTION CHART:

BRACKET #	HEATER KW SIZE USED WITH	BRACKET DIMENSIONS												
		L	W	H	A	B	C	D	E	F	G	X	Y	Z
KBB-1	3 to 7.5 kW (1 phase)	12½"	3"	10"	1¼"	7¼"	1½"	1¾"	5½"	4"	1¼"	½"	1"	2"
KBB-2	10 to 15 kW (1 phase) 3 to 30 kW (3 phase)	17"	3"	10"	1¼"	7¼"	1½"	2"	8½"	5¼"	1¼"	½"	1"	2"

FIELD MOUNT ACCESSORIES:

MODEL	UPC #093319 PART #	DESCRIPTION	WT. (lbs.)
KBB-1	15192	Universal Wall/Ceiling Small Mounting Bracket (for heaters with size A and C)*	3
KBB-2	15195	Universal Wall/Ceiling Large Mounting Bracket (for heaters with size B, D and E) (Use 2 brackets for size F&G)	4
KBB-4	15351	Rough Service or Low Profile Mounting Bracket for any heater (2 each required for size F and G)*	4
KBT	15189	Capillary Bulb-Style Thermostat Kit (single pole single throw) 25 Amp	.5
KBT-2	18209	Capillary Bulb-Style Thermostat Kit (double pole single throw) 25 Amp	.5

* see BRACKET SELECTION CHART

Rough Service / Low Profile • KBB-4 Mounting Bracket

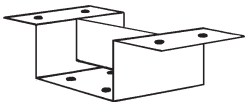

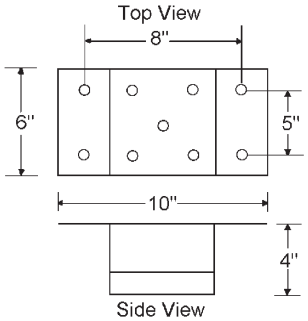

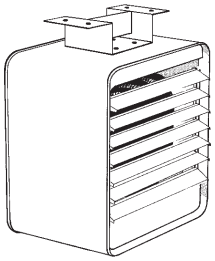

This bracket is manufactured in a Low Profile design with 5 mounting holes. *When using this bracket for Low Ceiling Profile installation use center hole only.*

Option **(-5MT)** is for *rough service support.* Request this option at the time of order placement. The heater will have four mounting holes fabricated into top.

Attach bracket using the four outside mounting holes to provide a rigid mount. The price of option **(-5MT)** *includes the KBB-4 bracket.* This is ideal for use on ships, containers or any application where the heater will experience vibration.

A unit heater being installed in a Chicago high rise electrical room for humidity and freeze protection

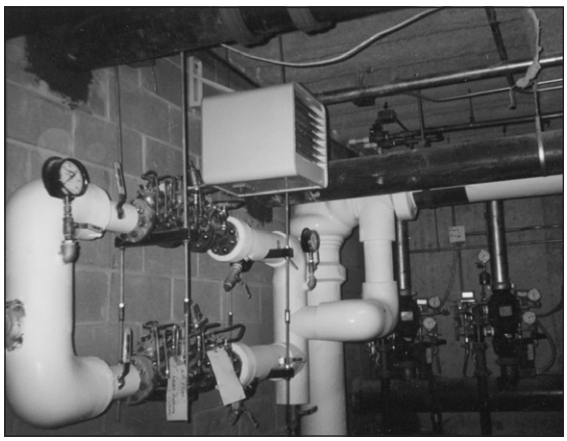

Water pumping and treatment room, protected from freezing and humidity with King KB unit heater

KBT - Capillary bulb-style thermostat senses intake air for accurate temperature control. Label calibrated from 40° - 75°F with a 44°F setting for unoccupied space as some energy codes require. 25 Amp rating.

Disconnects can be specified in 30, 40, 60, 80 or 100 Amp ratings with door interlock and padlock provision. Standard non-fused interlocking disconnect.

FACTORY INSTALLED OPTIONS:

ADD SUFFIX:	DESCRIPTION
-T	1-Pole Unit Mounted Thermostat (temperature range 40°F - 100°F)
-T2	2-Pole Unit Mounted Thermostat (temperature range 40°F - 100°F) 6kW and higher
-TP	Tamperproof Thermostat with Slotted Shaft
-B1	Mounting Bracket KBB-1 (included with heater size A and C)
-B2	Mounting Bracket KBB-2 (included with heater size B, D and E)
-SF	Summer Fan Switch
-SFR	Control Relay and 24V Transformer for Remote Summer Fan Operation
-3PS	3-Position Switch (Heat / Fan / Off)
-PL	Pilot Light (power ON indication)
-CX	Power Contactor for 3 kW - 5kW 1-Phase Models (Line Voltage Coil)
-CT24	Transformer that Converts 208, 240 and 277 Volts to 24 Volt Control Circuit {add power contactor (-CX) for 3 kW - 5kW 1-Phase models}
-CT120	Same as (-CT24) except 120 Volt Control Components {add power contactor (-CX) for 3kW - 5kW 1-Phase models}
-DS30	30 Amp, 3-Pole Disconnect Switch w/ Door Interlock and Padlock Provision
-DS40	40 Amp, 3-Pole Disconnect Switch w/ Door Interlock and Padlock Provision
-DS60	60 Amp, 3-Pole Disconnect Switch w/ Door Interlock and Padlock Provision
-DS80	80 Amp, 3-Pole Disconnect Switch w/ Door Interlock and Padlock Provision
-DS100	100 Amp, 3-Pole Disconnect Switch w/ Door Interlock and Padlock Provision
-2S1	2-Stage Control for Single Phase Models
-5MT	5 Mounting Weld Nuts Provided on Heater for Rough Service Use (includes KBB-4 5 hole bracket)
-5MT2	Rough Service Mounting Holes (4 each) fabricated into top of each heater to accept KBB-4 Mounting Brackets (2 each KBB-4 included)

Print

T87K1007/U

Thermostat, Round™, Mercury Free, Manual

Wall mount stat for unit heaters

Overview

The Round® thermostats provide electronic control of 24Vac heating and cooling systems with the classic twist to set dial.

Features

- Mercury Free
- Classic Styling
- Premier White®
- The T87K heat only works with 2 or 3 wire heat-only systems

Product Specifications

Hazmat Information	UN 3091 Lithium metal batteries packed in/with equipment
Application	Heat Only
Dimensions (in.)	3 11/16 in. diameter x 1 3/4 in. deep
Dimensions (mm)	94 mm diameter x 45 mm deep
Item Type	Product
Mounting	Round
Electrical Ratings	20 to 30 Vac
Frequency	50 Hz; 60 Hz
Stages	1 Heat
Operating Humidity Range (% RH)	5 to 90% RH (non-condensing)
Supply Voltage	20 to 30 Vac
Sensor Element	Thermistor
Accuracy (F)	± 2 F
Accuracy (C)	± 1 C
Color	Premier White®
Switch Type	Relay
Power Method	Battery assisted power stealing
Terminal Designations	R, W, Y
Setting Temperature Range (F)	40 F to 90 F
Cycles per Hour	Adjustable 1, 3, 5, 9
Heat Current	0.02A to 1.0A running

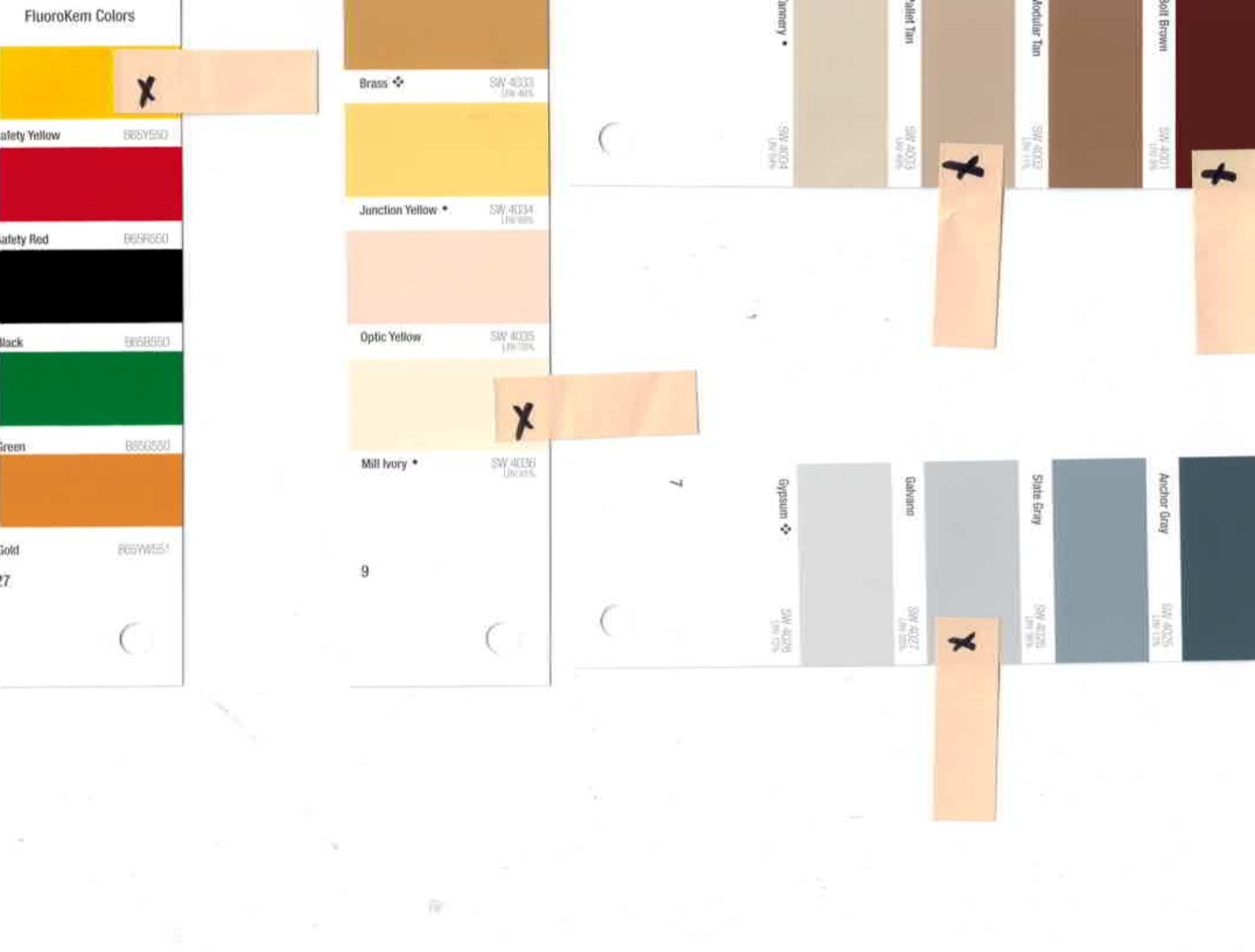
FluoroKem Colors
afety Yellow B65Y550
afety Red B65R550
Black B65B550
Green B65G550
Gold B65W551
27
Brass
SW 4033
Junction Yellow •
SW 4034
Optic Yellow
SW 4035
Mill Ivory •
SW 4036
9
Gypsum
SW 4044
Galvana
SW 4027
Slate Gray
SW 4015
Anchor Gray
SW 4055
Modular Tan
SW 4002
Bott Brown
SW 4001

SHERWIN-WILLIAMS
211 NW BYPASS ROAD
GREAT FALLS, MT 59404 4120
(406) 761-6174

12/19/2014

ED BOLAND CONSTRUCTION
PO BOX 7107
GREAT FALLS MT 594067107

Re: Submittal for Sand Coulee Water System Replacement Project

Dear Scott :

Thank you for considering Sherwin-Williams products for the Sand Coulee Water System Replacement Project project. Included in this package is the Sherwin-Williams submittal for the above referenced project.

Should you require assistance or have any questions or concerns, please contact me at (406) 453-5421 or e-mail me at sw3539@sherwin.com.

Sincerely,

Kevin Voytoski
Sherwin-Williams
Sales Representative

SCHEDULE

System # 1

Steel / Exposed Metal-Mildly Corrosive

Primer: B50AZ0006 - Kem Kromik® Universal Metal Primer Gray Gray

Prime raw steel with 1 coat of Kem Kromic Primer.

Finish: B54W00151 - Pro Industrial Urethane Alkyd Enamel Extra White or colors

Pre-primed metal (FBE) needs to be scarified with 100 grit sand paper, removing the sanding fines. Then apply 2 coats of finish. See System # 1 A, For two part systems.

System #2

Metal Trim, structural steel, copper tubing, Electrical Pannels.

Primer: B50AZ0006 - Kem Kromik® Universal Metal Primer Gray Gray

Apply 1 coat of primer.

Finish: B54W00151 - Pro Industrial Urethane Alkyd Enamel Extra White or colors

Pre-primed metal needs to be scarified with 100 grit sand paper, removing the sanding fines. Then apply 2 coats of finish.

System #3

Galvanized and Plain Steel Metal

Primer: B71Y00001 - DTM Wash Primer Yellow-Green Yellow-Green

Direct to Metal Wash primer 1 coat.

Finish: B58W00610 - Macropoxy® 646 Fast Cure Epoxy Part A Mill White or colored

2 coats @ 8 mils per coat DFT

System #4

Concrete/Cement Floors

Primer: B58W00610 - Macropoxy® 646 Fast Cure Epoxy Part A Mill White or colored

Apply 2 coats @ 8 mils DFT per coat.

System #5

Masonry Interior

Primer: B25W00025 - PrepRite® Interior/Exterior Latex Block Filler White

Apply 1 coat of Block Filler.

Finish: K46W00151 - Pro Industrial PreCatalyzed Waterbased Semi-Gloss Epoxy Extra White

Apply 2 coats of Water Based Epoxy, PreCatalyzed.

System #6

PVC Pipping

Primer: .01550235 - XIM® 400 Primer Sealer White

Primer for PVC Pipping 1 coat.

Finish: B54W00151 - Pro Industrial Urethane Alkyd Enamel Extra White

Apply 2 finish coats.

System # 1 A

Steel / Exposed Metal-Mildly Corrosive

Primer: B67A00005 - Recoatable Epoxy Primer Gray

Primer for raw sand blasted steel. This is a two part epoxy.

Steel

Finish: B65W00311 - Hi-Solids Polyurethane Gloss (Part S) Extra White/Tint Base Part S

This is the finish over the epoxy primer. Two part systems are more corrosion resistant.

END OF SECTION

Data Pages

Protective & Marine Coatings

KEM KROMIK® UNIVERSAL METAL PRIMER

B50NZ6 Brown
B50WZ1 Off White
B50AZ6 Gray

Revised 12/11

PRODUCT INFORMATION

2.11

PRODUCT DESCRIPTION

KEM KROMIK UNIVERSAL METAL PRIMER is a rust inhibiting, low VOC, modified phenolic alkyd resin primer designed for use over iron and steel substrates. Can be used as a universal primer under high performance topcoats. Suitable as a barrier coat over conventional coatings which would normally be attacked by strong solvents in high performance coatings.

- High film build to protect sand blasted steel
- Corrosion resistant
- Can be topcoated with epoxies and urethanes
- Low temperature application

PRODUCT CHARACTERISTICS

Finish:	Flat
Color:	Brown (Red Oxide), Off White, Gray
Volume Solids:	53% ± 2%
Weight Solids:	73% ± 2%
VOC (EPA Method 24):	<420 g/L, 3.5 lb/gal

Recommended Spreading Rate per coat:

	Minimum	Maximum
Wet mils (microns)	**6.0** (150)	**8.0** (200)
Dry mils (microns)	**3.0** (75)	**4.0** (100)
~Coverage sq ft/gal (m^2/L)	**212** (5.2)	**283** (7.0)
Theoretical coverage sq ft/gal (m^2/L) @ 1 mil / 25 microns dft	**848** (20.8)	

NOTE: Brush or roll application may require multiple coats to achieve maximum film thickness and uniformity of appearance.

Drying Schedule @ 6.0 mils wet (150 microns):

	@ 40°F/4.5°C	@ 77°F/25°C *50% RH*	@ 110°F/43°C
To touch:	2 hours	30 minutes	15 minutes
To handle:	2.5 hours	1 hour	20 minutes
To recoat:			
itself & alkyds	2.5 hours	1 hour	45 minutes
high performance/ hot solvent topcoats	36 hours	16 hours	16 hours
To cure:	7 days	7 days	7 days

Note: For maximum adhesion, acrylic topcoats require 48 - 72 hours drying of primer.

Drying time is temperature, humidity, and film thickness dependent.

Shelf Life:	36 months, unopened Store indoors at 40°F (4.5°C) to 100°F (38°C).
Flash Point:	80°F (27°C), PMCC
Reducer:	Not recommended
Clean Up:	Xylene R2K4

RECOMMENDED USES

For use over prepared steel.

- Universal primer
- Shopcoat primer
- Barrier coating
- Maintenance primer
- Interior / exterior metal primer
- Structural steel
- Equipment / machinery
- Marine vessels
- Hand rails
- Conforms to AWWA D102, OCS #1
- Suitable for use in USDA inspected facilities
- Conforms to MPI #'s 69, 79, & 95

According to AISC, shop coat primers are intended for protection for only a short period of exposure in ordinary atmospheric conditions, and is considered a temporary and provisional coating.

Not recommended for immersion service or exposure to acids, alkalis, or strong solvents.

PERFORMANCE CHARACTERISTICS

Substrate*: Steel
Surface Preparation*: SSPC-SP6
System Tested*:
1 ct. Kem Kromik Universal @ 3.0 mils (75 microns) dft
*unless otherwise noted below

Test Name	Test Method	Results
Abrasion Resistance	ASTM D4060, CS17 wheel, 1000 cycles, 1 kg load	250 mg loss
Adhesion	ASTM D4541	260 psi
Direct Impact Resistance	ASTM D2794	70 in. lbs.
Dry Heat Resistance	ASTM D2485	200°F (93°C)
Flexibility	ASTM D522, 180° bend, 1/4" mandrel	Passes
Moisture Condensation Resistance	ASTM D4585, 100°F (38°C), 500 hours	Good
Pencil Hardness	ASTM D3363	H
Salt Fog Resistance	ASTM B117, 500 hours	Good
Thermal Shock	ASTM D2246, 5 cycles	Passes

Provides performance comparable to products formulated to federal specifications: TT-P-664D.

continued on back

Protective & Marine Coatings

KEM KROMIK® UNIVERSAL METAL PRIMER

B50NZ6	Brown
B50WZ1	Off White
B50AZ6	Gray

Product Information

2.11

Recommended Systems

		Dry Film Thickness / ct. Mils	(Microns)
Steel, Alkyd Topcoat:			
1 ct.	Kem Kromik Universal Metal Primer	3.0-4.0	(75-100)
1-2 cts.	Industrial Enamel HS	2.0-4.0	(50-100)
or	WB Industrial Enamel	1.5-3.0	(40-75)
or	Steel Spec Fast Dry Alkyd	3.0-5.0	(75-125)
Steel, Aluminum Finish:			
1 ct.	Kem Kromik Universal Metal Primer	3.0-4.0	(75-100)
1-2 cts.	Silver-Brite Aluminum	1.0-1.5	(25-40)
Steel, Acrylic Topcoat:			
1 ct.	Kem Kromik Universal Metal Primer	3.0-4.0	(75-100)
1-2 cts.	DTM Acrylic Coating	2.5-4.0	(63-100)
or	Sher-Cryl HPA	2.5-4.0	(63-100)
Steel, Epoxy Topcoat:			
1 ct.	Kem Kromik Universal Metal Primer	3.0-4.0	(75-100)
1-2 cts.	Tile-Clad HS Epoxy	2.5-4.0	(63-100)
Steel, Polyurethane Topcoat:			
1 ct.	Kem Kromik Universal Metal Primer	3.0-4.0	(75-100)
1-2 cts.	Hi-Solids Polyurethane	3.0-4.0	(75-100)
or	Polylon HP Polyurethane	2.0-3.0	(50-75)
Steel, Silicone Alkyd Topcoat:			
1 ct.	Kem Kromik Universal Metal Primer	3.0-4.0	(75-100)
1-2 cts.	Steel Master 9500	2.5-4.0	(63-100)
Steel, Water Based Epoxy Topcoat:			
1 ct.	Kem Kromik Universal Metal Primer	3.0-4.0	(75-100)
1-2 cts.	Water Based Catalyzed Epoxy	2.5-4.0	(63-100)
or	Waterbased Tile Clad Epoxy	2.0-4.0	(50-100)

The systems listed above are representative of the product's use, other systems may be appropriate.

Disclaimer

The information and recommendations set forth in this Product Data Sheet are based upon tests conducted by or on behalf of The Sherwin-Williams Company. Such information and recommendations set forth herein are subject to change and pertain to the product offered at the time of publication. Consult your Sherwin-Williams representative to obtain the most recent Product Data Information and Application Bulletin.

Surface Preparation

Surface must be clean, dry, and in sound condition. Remove all oil, dust, grease, dirt, loose rust, and other foreign material to ensure adequate adhesion.

Refer to product Application Bulletin for detailed surface preparation information.

Minimum recommended surface preparation:
Iron & Steel: SSPC-SP2

Surface Preparation Standards

	Condition of Surface	ISO 8501-1 BS7079:A1	Swedish Std. SIS055900	SSPC	NACE
White Metal		Sa 3	Sa 3	SP 5	1
Near White Metal		Sa 2.5	Sa 2.5	SP 10	2
Commercial Blast		Sa 2	Sa 2	SP 6	3
Brush-Off Blast		Sa 1	Sa 1	SP 7	4
Hand Tool Cleaning	Rusted	C St 2	C St 2	SP 2	-
	Pitted & Rusted	D St 2	D St 2	SP 2	-
Power Tool Cleaning	Rusted	C St 3	C St 3	SP 3	-
	Pitted & Rusted	D St 3	D St 3	SP 3	-

Tinting

Do not tint.

Application Conditions

Temperature: 40°F (4.5°C) minimum, 120°F (49°C) maximum
(air, surface, and material)
At least 5°F (2.8°C) above dew point

Relative humidity: 85% maximum

Refer to product Application Bulletin for detailed application information.

Ordering Information

Packaging: 1 gallon (3.78L) and 5 gallon (18.9L) containers

Weight: 12.5 ± 0.35 lb/gl 1.5 Kg/L

Safety Precautions

Refer to the MSDS sheet before use.

Published technical data and instructions are subject to change without notice. Contact your Sherwin-Williams representative for additional technical data and instructions.

Warranty

The Sherwin-Williams Company warrants our products to be free of manufacturing defects in accord with applicable Sherwin-Williams quality control procedures. Liability for products proven defective, if any, is limited to replacement of the defective product or the refund of the purchase price paid for the defective product as determined by Sherwin-Williams. NO OTHER WARRANTY OR GUARANTEE OF ANY KIND IS MADE BY SHERWIN-WILLIAMS, EXPRESSED OR IMPLIED, STATUTORY, BY OPERATION OF LAW OR OTHERWISE, INCLUDING MERCHANTABILITY AND FITNESS FOR A PARTICULAR PURPOSE.

Protective & Marine Coatings

KEM KROMIK® UNIVERSAL METAL PRIMER

B50NZ6	Brown
B50WZ1	Off White
B50AZ6	Gray

Revised 12/11

Application Bulletin

2.11

Surface Preparations

Surface must be clean, dry, and in sound condition. Remove all oil, dust, grease, dirt, loose rust, and other foreign material to ensure adequate adhesion.

Iron & Steel
Minimum surface preparation is Hand Tool Clean per SSPC-SP2. Remove all oil and grease from surface by Solvent Cleaning per SSPC-SP1. For better performance, use Commercial Blast Cleaning per SSPC-SP6/NACE 3, blast clean all surfaces using a sharp, angular abrasive for optimum surface profile (2 mils / 50 microns). Prime any bare steel within 8 hours or before flash rusting occurs.

Previously Painted Surfaces
If in sound condition, clean the surface of all foreign material. Smooth, hard, or glossy coatings and surfaces should be dulled by abrading the surface. Apply a test area, allowing paint to dry one week before testing adhesion. If adhesion is poor, or if this product attacks the previous finish, removal of the previous coating may be necessary. If paint is peeling or badly weathered, clean surface to sound substrate and treat as a new surface as above.

As a "Barrier" Coat:
If it is necessary to topcoat a previously painted surface with chemically resistant or strong solvent topcoats, Kem Kromik Universal Metal Primer can be used as a barrier coat to prevent lifting. Apply a coat of Kem Kromik Universal Metal Primer to a small area to test for adhesion or bleeding. If there is evidence of either poor adhesion or bleeding, clean surface to bare substrate and apply recommended system.

Surface Preparation Standards

	Condition of Surface	ISO 8501-1 BS7079:A1	Swedish Std. SIS055900	SSPC	NACE
White Metal		Sa 3	Sa 3	SP 5	1
Near White Metal		Sa 2.5	Sa 2.5	SP 10	2
Commercial Blast		Sa 2	Sa 2	SP 6	3
Brush-Off Blast		Sa 1	Sa 1	SP 7	4
Hand Tool Cleaning	Rusted	C St 2	C St 2	SP 2	-
	Pitted & Rusted	D St 2	D St 2	SP 2	-
Power Tool Cleaning	Rusted	C St 3	C St 3	SP 3	-
	Pitted & Rusted	D St 3	D St 3	SP 3	-

Application Conditions

Temperature:	40°F (4.5°C) minimum, 120°F (49°C) maximum (air, surface, and material) At least 5°F (2.8°C) above dew point
Relative humidity:	85% maximum

Application Equipment

The following is a guide. Changes in pressures and tip sizes may be needed for proper spray characteristics. Always purge spray equipment before use with listed reducer. Any reduction must be compliant with existing VOC regulations and compatible with the existing environmental and application conditions.

Reducer .....Not recommended

Clean Up .....Xylene, R2K4

Airless Spray
Pressure.....1800-3000 psi
Hose.....1/4" ID
Tip .....015" - .019"
Filter.....60 mesh

Conventional Spray
Gun .....Binks 95
Fluid Nozzle 63C
Air Nozzle.....63PB
Atomization Pressure.....50 psi
Fluid Pressure.....15-20 psi

Brush
Brush.....Natural Bristle

Roller
Cover .....3/8" woven solvent resistant core

If specific application equipment is not listed above, equivalent equipment may be substituted.

continued on back

Protective & Marine Coatings

KEM KROMIK® UNIVERSAL METAL PRIMER

B50NZ6	Brown
B50WZ1	Off White
B50AZ6	Gray

Application Bulletin

2.11

Application Procedures

Surface preparation must be completed as indicated.

Mixing Instructions: Mix paint thoroughly to a uniform consistency with low speed power agitation prior to use.

Apply paint at the recommended film thickness and spreading rate as indicated below:

Recommended Spreading Rate per coat:

	Minimum	Maximum
Wet mils (microns)	**6.0** (150)	**8.0** (200)
Dry mils (microns)	**3.0** (75)	**4.0** (100)
~Coverage sq ft/gal (m^2/L)	**212** (5.2)	**283** (7.0)
Theoretical coverage sq ft/gal (m^2/L) @ 1 mil / 25 microns dft	**848** (20.8)	

NOTE: Brush or roll application may require multiple coats to achieve maximum film thickness and uniformity of appearance.

Drying Schedule @ 6.0 mils wet (150 microns):

	@ 40°F/4.5°C	@ 77°F/25°C *50% RH*	@ 110°F/43°C
To touch:	2 hours	30 minutes	15 minutes
To handle:	2.5 hours	1 hour	20 minutes
To recoat:			
itself & alkyds	2.5 hours	1 hour	45 minutes
high performance/ hot solvent topcoats	36 hours	16 hours	16 hours
To cure:	7 days	7 days	7 days

Note: For maximum adhesion, acrylic topcoats require 48 - 72 hours drying of primer.

Drying time is temperature, humidity, and film thickness dependent.

Application of coating above maximum or below minimum recommended spreading rate may adversely affect coating performance.

Clean Up Instructions

Clean spills and spatters immediately with Xylene, R2K4. Clean tools immediately after use with Xylene, R2K4. Follow manufacturer's safety recommendations when using any solvent.

Disclaimer

The information and recommendations set forth in this Product Data Sheet are based upon tests conducted by or on behalf of The Sherwin-Williams Company. Such information and recommendations set forth herein are subject to change and pertain to the product offered at the time of publication. Consult your Sherwin-Williams representative to obtain the most recent Product Data Information and Application Bulletin.

Performance Tips

Stripe coat all crevices, welds, and sharp angles to prevent early failure in these areas.

When using spray application, use a 50% overlap with each pass of the gun to avoid holidays, bare areas, and pinholes. If necessary, cross spray at a right angle.

Spreading rates are calculated on volume solids and do not include an application loss factor due to surface profile, roughness or porosity of the surface, skill and technique of the applicator, method of application, various surface irregularities, material lost during mixing, spillage, overthinning, climatic conditions, and excessive film build.

No reduction of material is recommended as it can affect film build, appearance, and adhesion.

Intimate contact with the steel surface and primer is necessary for adequate rust inhibition and adhesion.

Refer to Product Information sheet for additional performance characteristics and properties.

Safety Precautions

Refer to the MSDS sheet before use.

Published technical data and instructions are subject to change without notice. Contact your Sherwin-Williams representative for additional technical data and instructions.

Warranty

The Sherwin-Williams Company warrants our products to be free of manufacturing defects in accord with applicable Sherwin-Williams quality control procedures. Liability for products proven defective, if any, is limited to replacement of the defective product or the refund of the purchase price paid for the defective product as determined by Sherwin-Williams. NO OTHER WARRANTY OR GUARANTEE OF ANY KIND IS MADE BY SHERWIN-WILLIAMS, EXPRESSED OR IMPLIED, STATUTORY, BY OPERATION OF LAW OR OTHERWISE, INCLUDING MERCHANTABILITY AND FITNESS FOR A PARTICULAR PURPOSE.

PRO INDUSTRIAL™

113.11

URETHANE ALKYD ENAMEL

B54-150 SERIES

As of 03/01/2013, Complies with:			
OTC	Yes	LEED® 09 CI	No
SCAQMD	No	LEED® 09 NC	No
CARB	No	LEED® 09 CS	No
CARB SCM 2007	No	LEED® 09 S	No
MPI Spec #	No	NGBS	No

CHARACTERISTICS

Pro Industrial Urethane Alkyd Enamel is a high solids, high gloss coating intended for interior/exterior use in industrial environments. It is easy to brush, roll or spray. Provides performance comparable to silicone alkyds.

- Modified with urethane resin for increased exterior durability
- Resistant to chipping and flaking
- Resists premature yellowing
- Abrasion resistant
- Appropriate for interior and exterior applications
- Very good gloss and color retention
- Excellent application characteristics
- Suitable for use in USDA inspected facilities

Color: Most Colors

Recommended Spread Rate per coat:

Wet mils:	3.5 - 7.0
Dry mils:	2.0 - 4.0
Coverage:	231 - 462 sq ft/gal approximate

Note: Brush or roll application may require multiple coats to achieve maximum film thickness and uniformity of appearance.

Drying Time @ 4.0 mils wet 50% RH:

	45°F	77°F	120°F
To touch:	4 hrs	2½ hrs	30 min
Tack free:	10 hrs	4 hrs	2 hrs
To recoat:	36 hrs	18 hrs	8 hrs
To cure:	7 days	7 days	5 days

Drying time is temperature, humidity, and film thickness dependent.

Finish: Gloss

Flash Point: 103°F, PMCC

Shelf Life: 36 months, unopened
Store indoors at 40°F to 100°F.

Tinting with Blend-A-Color or MaxiToner:

Base	oz/gal	Strength
Extra White	0-6	100%
Ultradeep	4-12	100%

B54W00151 (may vary by color)

VOC (EPA Method 24): Unreduced: <330g/L; <2.75 lb/gal

Volume Solids: 58% ± 2%

Weight Solids: 72% ± 2%

Weight per Gallon: 9.8 lb

RECOMMENDED SYSTEMS

Steel (alkyd primer):
1 ct. Kem Bond HS Primer
1-2 cts. Pro Industrial Urethane Alkyd Enamel

Aluminum:
1 ct. DTM Wash Primer
1-2 cts. Pro Industrial Urethane Alkyd Enamel

Galvanized Metal:
1 ct. Galvite HS
1-2 cts. Pro Industrial Urethane Alkyd Enamel

Concrete Block:
1 ct. Heavy Duty Block Filler
1-2 cts. Pro Industrial Urethane Alkyd Enamel

Interior Plaster and Poured Concrete:
1 ct. Loxon Masonry Primer
1-2 cts. Pro Industrial Urethane Alkyd Enamel

Drywall:
1 ct. ProMar 200 Latex Primer
1-2 cts. Pro Industrial Urethane Alkyd Enamel

Wood Floors (Foot Traffic):
1-2 cts. Pro Industrial Urethane Alkyd Enamel

System Tested: (unless otherwise indicated)
Substrate: Steel
Surface Preparation: SSPC-SP10
1 ct. Kem Bond HS Primer
1 ct. Pro Industrial Urethane Alkyd Enamel

Abrasion
Method: ASTM D4060, C517 wheel, 1000 cycles,1 kg load
Result: 175 mg loss

Adhesion
Method: ASTM D4541
Result: 392 psi

Direct Impact Resistance
Method: ASTM D2794
Result: 60 in. lbs.

Dry Heat Resistance
Method: ASTM D2485
Result: 200°F (93°C) (discolors)

Flexibility
Method: ASTM D522, 180° bend, 1/4" mandrel
Result: Passes

Humidity Resistance
Method: ASTM D4548, 500 hours
Result: Rating 10 per ASTM D610 for Rusting; Rating 10 per ASTM D714 for Blistering

Pencil Hardness
Method: ASTM D3363
Result: B

Salt Fog Resistance
Method: ASTM B117, 500 hours
Result: Rating 10 per ASTM D610 for Rusting; Rating 10 per ASTM D714 for Blistering

continued on back

PRO INDUSTRIAL™
URETHANE ALKYD ENAMEL

SHERWIN-WILLIAMS®

SURFACE PREPARATION

WARNING! Removal of old paint by sanding, scraping or other means may generate dust or fumes that contain lead. Exposure to lead dust or fumes may cause brain damage or other adverse health effects, especially in children or pregnant women. Controlling exposure to lead or other hazardous substances requires the use of proper protective equipment, such as a properly fitted respirator (NIOSH approved) and proper containment and cleanup. For more information, call the National Lead Information Center at 1-800-424-LEAD (in US) or contact your local health authority.

Surface must be clean, dry, and in sound condition. Remove all oil, dust, grease, dirt, loose rust, and other foreign material to ensure adequate adhesion.

Iron & Steel
Remove all oil and grease from surface by Solvent Cleaning per SSPC-SP1. Minimum surface preparation is Hand Tool Clean per SSPC-SP2. For better performance, use Commercial Blast Cleaning per SSPC-SP6/NACE 3, blast clean all surfaces using a sharp, angular abrasive for optimum surface profile (2 mils / 50 microns). Prime any bare steel within 8 hours or before flash rusting occurs.

Aluminum
Remove all oil, grease, dirt, oxide and other foreign material by Solvent Cleaning per SSPC-SP1. Primer required.

Galvanized Steel
Allow to weather a minimum of six months prior to coating. Solvent Clean per SSPC-SP1. When weathering is not possible, or the surface has been treated with chromates or silicates, first Solvent Clean per SSPC-SP1 and apply a test patch. Allow paint to dry at least one week before testing adhesion. If adhesion is poor, brush blasting per SSPC-SP7 is necessary to remove these treatments. Primer required. Rusty galvanizing requires a minimum of Hand Tool Cleaning per SSPC-SP2, prime the area the same day as cleaned.

Masonry and Concrete
For surface preparation, refer to SSPC-SP13/NACE 6 or ICRI No. 310.2, CSP 1-3. Surfaces should be thoroughly clean and dry. Concrete and mortar must be cured at least 28 days @ 75°F (24°C). Remove all loose mortar and foreign material. Surface must be free of laitance, concrete dust, dirt, form release agents, moisture curing membranes, loose cement and hardeners. Fill bug holes, air pockets and other voids with ArmorSeal Crack Filler. Weathered masonry and soft or porous cement board must be brush blasted or power tool cleaned to remove loosely adhering contamination and to get to a hard, firm surface. Laitance must be removed. Brick must be allowed to weather for one year prior to surface preparation and painting. Primer required.

Wood
Surface must be clean, dry, and sound. Paint as soon as possible. No painting should be done immediately after a rain or during foggy weather. Knots and pitch streaks must be scraped, sanded and spot primed. All nail holes or small openings must be properly caulked. Sand to remove any loose or deteriorated surface wood and to obtain a proper surface profile. Self priming.

Previously Painted Surfaces
If in sound condition, clean the surface of all foreign material. Smooth, hard or glossy coatings and surfaces should be dulled by abrading the surface. Apply a test area, allowing paint to dry one week before testing adhesion. If adhesion is poor, or if this product attacks the previous finish, removal of the previous coating may be necessary. If paint is peeling or badly weathered, clean surface to sound substrate and treat as a new surface as above.

APPLICATION

Refer to the MSDS before using
Temperature: 40°F minimum
120°F maximum
(air, surface, and material)
At least 5°F above dew point
Relative humidity: 85% maximum

The following is a guide. Changes in pressures and tip sizes may be needed for proper spray characteristics. Always purge spray equipment before use with listed reducer. Any reduction must be compatible with the existing environmental and application conditions.

Reducer/Clean Up
Mineral Spirits, R1K4* or Xylene, R2K4

Airless Spray
Pressure ..... 1800 psi minimum
Hose ..... 3/8" ID
Tip ..... .017" - .019"
Filter ..... 60 - 100 mesh
Reduction..... As needed up to 10% by volume

Conventional Spray
Gun ..... Binks 95
Fluid Nozzle..... 66
Air Nozzle 63PB
Atomization Pressure .....50 psi
Fluid Pressure ..... 20-25 psi
Reduction..... As needed up to 10% by volume

Brush
Brush.....Nylon/polyester or natural bristle
Reduction..... As needed up to 10% by volume

Roller
Cover
1/4 - 3/8" lambswool or synthetic cover
Reduction..... As needed up to 10% by volume

* To maintain VOC compliance of 340 g/l, only a 2% reduction of Mineral Spirits, R1K4 is allowed.

CLEANUP INFORMATION

Clean spills, spatters, and tools immediately after use with mineral spirits. Follow manufacturer's safety recommendations when using mineral spirits.

The information and recommendations set forth in this Product Data Sheet are based upon tests conducted by or on behalf of The Sherwin-Williams Company. Such information and recommendations set forth herein are subject to change and pertain to the product offered at the time of publication. Consult your Sherwin-Williams representative to obtain the most recent Product Data Information and Application Bulletin. The Sherwin-Williams Company warrants our products to be free of manufacturing defects in accord with applicable Sherwin-Williams quality control procedures. Liability for products proven defective, if any, is limited to replacement of the defective product or the refund of the purchase price paid for the defective product as determined by Sherwin-Williams. NO OTHER WARRANTY OR GUARANTEE OF ANY KIND IS MADE BY SHERWIN-WILLIAMS, EXPRESSED OR IMPLIED, STATUTORY, BY OPERATION OF LAW OR OTHERWISE, INCLUDING MERCHANTABILITY AND FITNESS FOR A PARTICULAR PURPOSE.

Protective & Marine Coatings

DTM WASH PRIMER

B71Y1

Revised: March 27, 2014

PRODUCT INFORMATION

1.20

PRODUCT DESCRIPTION

DTM WASH PRIMER is a low VOC, water based wash primer free of heavy metals and mineral acids. Designed to be applied over aluminum and galvanizing, or used as a tie-coat over zinc rich primers. Accepts high performance "hot" solvent topcoats directly, such as epoxies and urethanes.

- Fast dry
- Flash rust/early rust resistant
- No "critical" film thickness
- Low odor
- Extended recoat time

PRODUCT CHARACTERISTICS

Finish:	Flat
Color:	Yellow-Green
Volume Solids:	21% ± 2%
Weight Solids:	29% ± 2%
VOC (EPA Method 24):	<100 g/L; .83 lb/gal

Recommended Spreading Rate per coat:

	Minimum	Maximum
Wet mils (microns)	**3.4** (85)	**6.4** (160)
Dry mils (microns)	**0.7** (18)	**1.3** (32)
~Coverage sq ft/gal (m^2/L)	**250** (6.1)	**470** (11.5)
Theoretical coverage sq ft/gal (m^2/L) @ 1 mil / 25 microns dft	**336** (8.2)	

NOTE: Brush or roll application may require multiple coats to achieve maximum film thickness and uniformity of appearance.

Drying Schedule @ 6.0 mils wet (150 microns):

	@ 50°F/10°C	@ 77°F/25°C *50% RH*	@ 110°F/43°C
To touch:	3 hours	2 hours	1 hour
To handle:	3 hours	2 hours	1 hour
To recoat:	8 hours	2 hours	1 hour
To cure:	7 days	5 days	3 days

Drying time is temperature, humidity, and film thickness dependent.

Shelf Life:	36 months, unopened Store indoors at 50°F (10°C) to 100°F (38°C)
Flash Point:	>200°F (93°C), PMCC, mixed
Reducer:	Not Recommended
Clean Up:	Water

RECOMMENDED USES

For use over prepared:

- Aluminum
- Galvanizing
- Stainless steel
- Zinc rich primers
- Must be topcoated
- Suitable for use in USDA inspected facilities

PERFORMANCE CHARACTERISTICS

Substrate*: Aluminum

Surface Preparation*: SSPC-SP1

System Tested*:

1 ct. DTM Wash Primer @ 1.0 mils (25 microns) dft

*unless otherwise noted below

Test Name	Test Method	Results
Adhesion	ASTM D3359	5B
Direct Impact	ASTM D2794	160 in. lbs.
Flexibility	ASTM D522, 180° bend, 1/8" mandrel	Passes
Pencil Hardness	ASTM D3363	F

continued on back

Protective & Marine Coatings

DTM WASH PRIMER

B71Y1

PRODUCT INFORMATION

1.20

RECOMMENDED SYSTEMS

		Dry Film Thickness / ct. Mils	(Microns)
Aluminum:			
1 ct.	DTM Wash Primer	0.7-1.3	(18-32)
2 cts.	DTM Acrylic Coating	2.5-4.0	(63-100)
Galvanizing:			
1 ct.	DTM Wash Primer	0.7-1.3	(18-32)
2 cts.	DTM Acrylic Coating	2.5-4.0	(63-100)
Steel:			
1 ct.	Zinc Clad Primer	3.0-5.0	(75-125)
1 ct.	DTM Wash Primer	0.7-1.3	(18-32)
2 cts.	DTM Acrylic Coating	2.5-4.0	(63-100)
Stainless Steel:			
1 ct.	DTM Wash Primer	0.7-1.3	(18-32)
2 cts.	DTM Acrylic Coating	2.5-4.0	(63-100)

Other Acceptable Topcoats:

Acrolon 218 HS Polyurethane
Fast Clad DTM Urethane
Hi-Solids Polyurethane
Hydrogloss
Industrial Enamel HS
Macropoxy HS Epoxy
Metalatex Semi-Gloss Enamel
Pro Industrial Acrylic
Sher-Cryl HPA
Sherthane 2K Urethane
Tile-Clad HS Epoxy
Waterbased Tile Clad Epoxy
Waterbased Industrial Enamel

The systems listed above are representative of the product's use, other systems may be appropriate.

DISCLAIMER

The information and recommendations set forth in this Product Data Sheet are based upon tests conducted by or on behalf of The Sherwin-Williams Company. Such information and recommendations set forth herein are subject to change and pertain to the product offered at the time of publication. Consult your Sherwin-Williams representative to obtain the most recent Product Data Information and Application Bulletin.

SURFACE PREPARATION

Surface must be clean, dry, and in sound condition. Remove all oil, dust, grease, dirt, loose rust, and other foreign material to ensure adequate adhesion.
Do not use hydrocarbon solvents for cleaning.

Refer to product Application Bulletin for detailed surface preparation information.

Minimum recommended surface preparation:

Aluminum:	SSPC-SP1
Galvanizing:	SSPC-SP1
Zinc Rich Coatings:	SSPC-SP1
Stainless Steel	SSPC-SP1

Surface Preparation Standards

	Condition of Surface	ISO 8501-1 BS7079:A1	Swedish Std. SIS055900	SSPC	NACE
White Metal		Sa 3	Sa 3	SP 5	1
Near White Metal		Sa 2.5	Sa 2.5	SP 10	2
Commercial Blast		Sa 2	Sa 2	SP 6	3
Brush-Off Blast		Sa 1	Sa 1	SP 7	4
Hand Tool Cleaning	Rusted	C St 2	C St 2	SP 2	-
	Pitted & Rusted	D St 2	D St 2	SP 2	-
Power Tool Cleaning	Rusted	C St 3	C St 3	SP 3	-
	Pitted & Rusted	D St 3	D St 3	SP 3	-

TINTING

Do not tint.

APPLICATION CONDITIONS

Temperature:	50°F (10°C) minimum, 110°F (43°C) maximum (air, surface, and material) At least 5°F (2.8°C) above dew point
Relative humidity:	85% maximum

Refer to product Application Bulletin for detailed application information.

ORDERING INFORMATION

Packaging:	1 (3.78L) and 5 (18.9L) gallon containers
Weight per gallon:	9.23 ± 0.2 lb 1.1Kg/L

SAFETY PRECAUTIONS

Refer to the MSDS sheet before use.

Published technical data and instructions are subject to change without notice. Contact your Sherwin-Williams representative for additional technical data and instructions.

WARRANTY

The Sherwin-Williams Company warrants our products to be free of manufacturing defects in accord with applicable Sherwin-Williams quality control procedures. Liability for products proven defective, if any, is limited to replacement of the defective product or the refund of the purchase price paid for the defective product as determined by Sherwin-Williams. NO OTHER WARRANTY OR GUARANTEE OF ANY KIND IS MADE BY SHERWIN-WILLIAMS, EXPRESSED OR IMPLIED, STATUTORY, BY OPERATION OF LAW OR OTHERWISE, INCLUDING MERCHANTABILITY AND FITNESS FOR A PARTICULAR PURPOSE.

Protective & Marine Coatings

DTM WASH PRIMER

B71Y1

Revised: March 27, 2014

APPLICATION BULLETIN

1.20

SURFACE PREPARATIONS

Surface must be clean, dry, and in sound condition. Remove all oil, dust, grease, dirt, loose rust, and other foreign material to ensure adequate adhesion.

Do not use hydrocarbon solvents for cleaning.

Aluminum
Remove all oil, grease, dirt, oxide and other foreign material by Solvent Cleaning per SSPC-SP1.

Galvanized Steel
Allow to weather a minimum of six months prior to coating. Solvent Clean per SSPC-SP1. When weathering is not possible, or the surface has been treated with chromates or silicates, first Solvent Clean per SSPC-SP1 and apply a test patch. Allow paint to dry at least one week before testing adhesion. If adhesion is poor, brush blasting per SSPC-SP7 is necessary to remove these treatments. Rusty galvanizing requires a minimum of Hand Tool Cleaning per SSPC-SP2, prime the area the same day as cleaned with Procryl Primer.

Zinc Rich Coatings
Remove all oil, dust, grease, dirt, loose rust, and other foreign material by cleaning per SSPC-SP1 or water blast per NACE Standard RP-01-72. For weathered zinc coatings, remove zinc salts by either high pressure water washing and scrubbing with a stiff bristle brush or sweep blast followed by a water flush. Allow to dry thoroughly before coating.

Stainless Steel
Remove all oil, grease, dirt, oxide and other foreign material by Solvent Cleaning per SSPC-SP1.

Surface Preparation Standards

	Condition of Surface	ISO 8501-1 BS7079:A1	Swedish Std. SIS055900	SSPC	NACE
White Metal		Sa 3	Sa 3	SP 5	1
Near White Metal		Sa 2.5	Sa 2.5	SP 10	2
Commercial Blast		Sa 2	Sa 2	SP 6	3
Brush-Off Blast		Sa 1	Sa 1	SP 7	4
Hand Tool Cleaning	Rusted	C St 2	C St 2	SP 2	-
	Pitted & Rusted	D St 2	D St 2	SP 2	-
Power Tool Cleaning	Rusted	C St 3	C St 3	SP 3	-
	Pitted & Rusted	D St 3	D St 3	SP 3	-

APPLICATION CONDITIONS

Temperature:	50°F (10°C) minimum, 110°F (43°C) maximum (air, surface, and material) At least 5°F (2.8°C) above dew point
Relative humidity:	85% maximum

APPLICATION EQUIPMENT

The following is a guide. Changes in pressures and tip sizes may be needed for proper spray characteristics. Always purge spray equipment before use with listed reducer. Any reduction must be compliant with existing VOC regulations and compatible with the existing environmental and application conditions.

Reducer .....Not recommended

Clean Up .....Water

Airless Spray
Pressure.....1500 psi
Hose.....1/4" ID
Tip .....015" - .017"
Filter.....80 mesh

Conventional Spray
Gun .....Binks 95
Fluid Nozzle 66
Air Nozzle.....63PB
Atomization Pressure.....50 psi
Fluid Pressure.....15-20 psi

Brush
Not recommended except for touch-up work.

Roller
Not recommended except for touch-up work.

If specific application equipment is not listed above, equivalent equipment may be substituted.

continued on back

Protective & Marine Coatings

DTM WASH PRIMER

B71Y1

APPLICATION BULLETIN

1.20

APPLICATION PROCEDURES

Surface preparation must be completed as indicated.

Mixing Instructions: Mix paint thoroughly by boxing and stirring before use. Avoid unnecessary entrapment of air. Mix with a power mixer at low speed.

Apply paint at the recommended film thickness and spreading rate as indicated below:

Recommended Spreading Rate per coat:

	Minimum	Maximum
Wet mils (microns)	**3.4** (85)	**6.4** (160)
Dry mils (microns)	**0.7** (18)	**1.3** (32)
~Coverage sq ft/gal (m^2/L)	**250** (6.1)	**470** (11.5)
Theoretical coverage sq ft/gal (m^2/L) @ 1 mil / 25 microns dft	**336** (8.2)	

NOTE: Brush or roll application may require multiple coats to achieve maximum film thickness and uniformity of appearance.

Drying Schedule @ 6.0 mils wet (150 microns):

	@ 50°F/10°C	@ 77°F/25°C *50% RH*	@ 110°F/43°C
To touch:	3 hours	2 hours	1 hour
To handle:	3 hours	2 hours	1 hour
To recoat:	8 hours	2 hours	1 hour
To cure:	7 days	5 days	3 days

Drying time is temperature, humidity, and film thickness dependent.

Application of coating above maximum or below minimum recommended spreading rate may adversely affect coating performance.

CLEAN UP INSTRUCTIONS

Clean spills and spatters immediately with soap and warm water. Clean hands and tools immediately after use with soap and warm water. After cleaning, flush spray equipment with Mineral Spirits to prevent rusting of the equipment. Follow manufacturer's safety recommendations when using Mineral Spirits.

DISCLAIMER

The information and recommendations set forth in this Product Data Sheet are based upon tests conducted by or on behalf of The Sherwin-Williams Company. Such information and recommendations set forth herein are subject to change and pertain to the product offered at the time of publication. Consult your Sherwin-Williams representative to obtain the most recent Product Data Information and Application Bulletin.

PERFORMANCE TIPS

When using spray application, use a 50% overlap with each pass of the gun to avoid holidays, bare areas, and pinholes. If necessary, cross spray at a right angle.

Spreading rates are calculated on volume solids and do not include an application loss factor due to surface profile, roughness or porosity of the surface, skill and technique of the applicator, method of application, various surface irregularities, material lost during mixing, spillage, overthinning, climatic conditions, and excessive film build.

Flush equipment thoroughly with water before using.

Do not apply to rusty galvanizing.

Do not reduce.

Must be topcoated.

Do not use hydrocarbon solvents for cleaning.

Refer to Product Information sheet for additional performance characteristics and properties.

SAFETY PRECAUTIONS

Refer to the MSDS sheet before use.

Published technical data and instructions are subject to change without notice. Contact your Sherwin-Williams representative for additional technical data and instructions.

WARRANTY

The Sherwin-Williams Company warrants our products to be free of manufacturing defects in accord with applicable Sherwin-Williams quality control procedures. Liability for products proven defective, if any, is limited to replacement of the defective product or the refund of the purchase price paid for the defective product as determined by Sherwin-Williams. NO OTHER WARRANTY OR GUARANTEE OF ANY KIND IS MADE BY SHERWIN-WILLIAMS, EXPRESSED OR IMPLIED, STATUTORY, BY OPERATION OF LAW OR OTHERWISE, INCLUDING MERCHANTABILITY AND FITNESS FOR A PARTICULAR PURPOSE.

Protective & Marine Coatings

MACROPOXY® 646 FAST CURE EPOXY

PART A	B58-600	SERIES
PART B	B58V600	HARDENER

Revised: October 8, 2014

PRODUCT INFORMATION

4.53

PRODUCT DESCRIPTION

MACROPOXY 646 FAST CURE EPOXY is a high solids, high build, fast drying, polyamide epoxy designed to protect steel and concrete in industrial exposures. Ideal for maintenance painting and fabrication shop applications. The high solids content ensures adequate protection of sharp edges, corners, and welds. This product can be applied directly to marginally prepared steel surfaces.

- Low VOC
- Low odor
- Chemical resistant
- Abrasion resistant
- Outstanding application properties
- Meets Class A requirements for Slip Coefficient, 0.36 @ 6 mils / 150 microns dft (Mill White only)

PRODUCT CHARACTERISTICS

Finish:	Semi-Gloss
Color:	Mill White, Black and a wide range of colors available through tinting
Volume Solids:	72% ± 2%, mixed, Mill White
Weight Solids:	85% ± 2%, mixed, Mill White
VOC (EPA Method 24): mixed	Unreduced: <250 g/L; 2.08 lb/gal Reduced 10%: <300 g/L; 2.50 lb/gal
Mix Ratio:	1:1 by volume

Recommended Spreading Rate per coat:

	Minimum	Maximum
Wet mils (microns)	**7.0** (175)	**13.5** (338)
Dry mils (microns)	**5.0*** (125)	**10.0*** (250)
~Coverage sq ft/gal (m^2/L)	**116** (2.8)	**232** (5.7)
Theoretical coverage **sq ft/gal** (m^2/L) @ 1 mil / 25 microns dft	**1152** (28.2)	

***May be applied at 3.0-10.0 mils (75-250 microns) dft as an intermediate coat in a multi-coat system. Refer to Recommended Systems (page 2). See Performance Tips section also.**

NOTE: Brush or roll application may require multiple coats to achieve maximum film thickness and uniformity of appearance.

Drying Schedule @ 7.0 mils wet (175 microns):

	@ 35°F/1.7°C	@ 77°F/25°C *50% RH*	@ 100°F/38°C
To touch:	4-5 hours	2 hours	1.5 hours
To handle:	48 hours	8 hours	4.5 hours
To recoat:			
minimum:	48 hours	8 hours	4.5 hours
maximum:	1 year	1 year	1 year
To cure:			
Service:	10 days	7 days	4 days
Immersion:	14 days	7 days	4 days
Pot Life:	10 hours	4 hours	2 hours
Sweat-in-time:	30 minutes	30 minutes	15 minutes

If maximum recoat time is exceeded, abrade surface before recoating.
Drying time is temperature, humidity, and film thickness dependent.
Paint temperature must be at least 40°F (4.5°C) minimum.

When used as an intermediate coat as part of a multi-coat system:

Drying Schedule @ 5.0 mils wet (125 microns):

	@ 35°F/1.7°C	@ 77°F/25°C *50% RH*	@ 100°F/38°C
To touch:	3 hours	1 hour	1 hour
To handle:	48 hours	4 hours	2 hours
To recoat:			
minimum:	16 hours	4 hours	2 hours
maximum:	1 year	1 year	1 year

PRODUCT CHARACTERISTICS (CONT'D)

Shelf Life:	36 months, unopened Store indoors at 40°F (4.5°C) to 110°F (43°C).
Flash Point:	91°F (33°C), TCC, mixed
Reducer/Clean Up:	Reducer, R7K15
In California:	Reducer R7K111 or Oxsol 100

PERFORMANCE CHARACTERISTICS

Substrate*: Steel
Surface Preparation*: SSPC-SP10/NACE 2
System Tested*:
1 ct. Macropoxy 646 Fast Cure @ 6.0 mils (150 microns) dft
*unless otherwise noted below

Test Name	Test Method	Results
Abrasion Resistance	ASTM D4060, CS17 wheel, 1000 cycles, 1 kg load	84 mg loss
Accelerated Weathering-QUV[1]	ASTM D4587, QUV-A, 12,000 hours	Passes
Adhesion	ASTM D4541	1,037 psi
Corrosion Weathering[1]	ASTM D5894, 36 cycles, 12,000 hours	Rating 10 per ASTM D714 for blistering; Rating 9 per ASTM D610 per rusting
Nuclear Decontamination	ASTM D4256/ANSI N 5.12	99% Water Wash; 95% Overall
Direct Impact Resistance[2]	ASTM D2794	120 in. lb.
Dry Heat Resistance	ASTM D2485	250°F (121°C)
Exterior Durability	1 year at 45° South	Excellent, chalks
Flexibility	ASTM D522, 180° bend, 3/4" mandrel	Passes
Fuel Contribution	NFPA 259	5764 btu/lb
Humidity Resistance	ASTM D4585, 6000 hours	No blistering, cracking, or rusting
Immersion	1 year fresh and salt water	Passes, no rusting, blistering, or loss of adhesion
Radiation Tolerance	ASTM D4082 / ANSI 5.12	Pass at 21 mils (525 microns)
Pencil Hardness	ASTM D3363	3H
Salt Fog Resistance[1]	ASTM B117, 6,500 hours	Rating 10 per ASTM D610 for rusting; Rating 9 per ASTM D1654 for corrosion
Slip Coefficient, Mill White*	AISC Specification for Structural Joints Using ASTM A325 or ASTM A490 Bolts	Class A, 0.36
Surface Burning	ASTM E84/NFPA 255	Flame Spread Index 20; Smoke Development Index 35 (at 18 mils or 450 microns)
Water Vapor Permeance	ASTM D1653, Method B	1.16 US perms

Epoxy coatings may darken or discolor following application and curing.

*Refer to Slip Certification document

Footnotes:
[1] *Zinc Clad II Plus Primer*
[2] *Two coats of* Macropoxy 646 Fast Cure Epoxy

DISCLAIMER

The information and recommendations set forth in this Product Data Sheet are based upon tests conducted by or on behalf of The Sherwin-Williams Company. Such information and recommendations set forth herein are subject to change and pertain to the product offered at the time of publication. Consult your Sherwin-Williams representative to obtain the most recent Product Data Information and Application Bulletin.

continued on back

Protective & Marine Coatings

MACROPOXY® 646 FAST CURE EPOXY

PART A B58-600 SERIES
PART B B58V600 HARDENER

Revised: October 8, 2014

PRODUCT INFORMATION

4.53

RECOMMENDED USES

- Marine applications
- Fabrication shops
- Pulp and paper mills
- Power plants
- Offshore platforms
- Nuclear Power Plants
- Nuclear fabrication shops
- Refineries
- Chemical plants
- Tank exteriors
- Water treatment plants
- DOE Nuclear Fuel Facilities
- DOE Nuclear Weapons Facilities
- Mill White and Black are acceptable for immersion use for salt water and fresh water, not acceptable for potable water
- Suitable for use in USDA inspected facilities
- Conforms to AWWA D102 OCS #5
- Conforms to MPI # 108
- This product meets specific design requirements for non-safety related nuclear plant applications in Level II, III and Balance of Plant, and DOE nuclear facilities*.

* Nuclear qualifications are NRC license specific to the facility.

- Suitable for use in the Mining & Minerals Industry

RECOMMENDED SYSTEMS

		Dry Film Thickness / ct. Mils	(Microns)
Immersion and atmospheric:			
Steel:			
2 cts.	Macropoxy 646 Fast Cure Epoxy	5.0-10.0	(125-250)
Concrete/Masonry, smooth:			
2 cts.	Macropoxy 646 Fast Cure Epoxy	5.0-10.0	(125-250)
Concrete Block:			
1 ct.	Kem Cati-Coat HS Epoxy Filler/Sealer	10.0-20.0	(250-500)
	as needed to fill voids and provide a continuous substrate.		
2 cts.	Macropoxy 646 Fast Cure Epoxy	5.0-10.0	(125-250)
Atmospheric:			
Steel:			
(Shop applied system, new construction, AWWA D102, can also be used at 3 mils / 75 microns minimum dft when used as an intermediate coat as part of a multi-coat system)			
1 ct.	Macropoxy 646 Fast Cure Epoxy	3.0-6.0	(75-150)
1-2 cts.	of recommended topcoat		
Steel:			
1 ct.	Recoatable Epoxy Primer	4.0-6.0	(100-150)
2 cts.	Macropoxy 646 Fast Cure Epoxy	5.0-10.0	(125-250)
Steel:			
1 ct.	Macropoxy 646 Fast Cure Epoxy	5.0-10.0	(125-250)
1-2 cts.	Acrolon 218 Polyurethane	3.0-6.0	(75-150)
or	Hi-Solids Polyurethane	3.0-5.0	(75-125)
or	SherThane 2K Urethane	2.0-4.0	(50-100)
or	Hydrogloss	2.0-4.0	(50-100)
Steel:			
2 cts.	Macropoxy 646 Fast Cure Epoxy	5.0-10.0	(125-250)
1-2 cts.	Tile-Clad HS Epoxy	2.5-4.0	(63-100)
Steel:			
1 ct.	Zinc Clad II Plus	2.0-4.0	(50-100)
1 ct.	Macropoxy 646 Fast Cure Epoxy	5.0-10.0	(125-250)
1-2 cts.	Acrolon 218 Polyurethane	3.0-6.0	(75-150)
Steel:			
1 ct.	Zinc Clad III HS	3.0-5.0	(75-125)
or	Zinc Clad IV	3.0-5.0	(75-125)
1 ct.	Macropoxy 646 Fast Cure Epoxy	3.0-10.0	(75-250)
1-2 cts.	Acrolon 218 Polyurethane	3.0-6.0	(75-150)
Aluminum:			
2 cts.	Macropoxy 646 Fast Cure Epoxy	5.0-10.0	(125-250)
Galvanizing:			
2 cts.	Macropoxy 646 Fast Cure Epoxy	5.0-10.0	(125-250)
FIRETEX ONLY:			
Steel & Galvanized Substrates being primed for FIRETEX only:			
1 ct.	Macropoxy 646 Fast Cure Epoxy	2.0-5.0	(50-125)

The systems listed above are representative of the product's use, other systems may be appropriate.

SURFACE PREPARATION

Surface must be clean, dry, and in sound condition. Remove all oil, dust, grease, dirt, loose rust, and other foreign material to ensure adequate adhesion.

Refer to product Application Bulletin for detailed surface preparation information.

Minimum recommended surface preparation:

Iron & Steel

Atmospheric:	SSPC-SP2/3
Immersion:	SSPC-SP10/NACE 2, 2-3 mil (50-75 micron) profile
Aluminum:	SSPC-SP1
Galvanizing:	SSPC-SP1; See Surface Preparations section on page 3 for application of FIRETEX intumescent coating systems

Concrete & Masonry

Atmospheric:	SSPC-SP13/NACE 6, or ICRI No. 310.2R, CSP 1-3
Immersion:	SSPC-SP13/NACE 6-4.3.1 or 4.3.2, or ICRI No. 310.2R, CSP 2-4

Surface Preparation Standards

	Condition of Surface	ISO 8501-1 BS7079:A1	Swedish Std. SIS055900	SSPC	NACE
White Metal		Sa 3	Sa 3	SP 5	1
Near White Metal		Sa 2.5	Sa 2.5	SP 10	2
Commercial Blast		Sa 2	Sa 2	SP 6	3
Brush-Off Blast		Sa 1	Sa 1	SP 7	4
Hand Tool Cleaning	Rusted	C St 2	C St 2	SP 2	-
	Pitted & Rusted	D St 2	D St 2	SP 2	-
Power Tool Cleaning	Rusted	C St 3	C St 3	SP 3	-
	Pitted & Rusted	D St 3	D St 3	SP 3	-

TINTING

Tint Part A with Maxitoners at 150% strength. Five minutes minimum mixing on a mechanical shaker is required for complete mixing of color.

Tinting is not recommended for immersion service.

APPLICATION CONDITIONS

Temperature:	35°F (1.7°C) minimum, 120°F (49°C) maximum (air and surface) 40°F (4.5°C) minimum, 120°F (49°C) maximum (material) At least 5°F (2.8°C) above dew point
Relative humidity:	85% maximum

Refer to product Application Bulletin for detailed application information.

ORDERING INFORMATION

Packaging:

Part A:	1 gallon (3.78L) and 5 gallon (18.9L) containers
Part B:	1 gallon (3.78L) and 5 gallon (18.9L) containers

Weight: 12.9 ± 0.2 lb/gal ; 1.55 Kg/L mixed, may vary by color

SAFETY PRECAUTIONS

Refer to the MSDS sheet before use.

Published technical data and instructions are subject to change without notice. Contact your Sherwin-Williams representative for additional technical data and instructions.

WARRANTY

The Sherwin-Williams Company warrants our products to be free of manufacturing defects in accord with applicable Sherwin-Williams quality control procedures. Liability for products proven defective, if any, is limited to replacement of the defective product or the refund of the purchase price paid for the defective product as determined by Sherwin-Williams. NO OTHER WARRANTY OR GUARANTEE OF ANY KIND IS MADE BY SHERWIN-WILLIAMS, EXPRESSED OR IMPLIED, STATUTORY, BY OPERATION OF LAW OR OTHERWISE, INCLUDING MERCHANTABILITY AND FITNESS FOR A PARTICULAR PURPOSE.

Protective & Marine Coatings

MACROPOXY® 646 FAST CURE EPOXY

PART A	B58-600	SERIES
PART B	B58V600	HARDENER

Revised: October 8, 2014

APPLICATION BULLETIN

4.53

SURFACE PREPARATIONS

Surface must be clean, dry, and in sound condition. Remove all oil, dust, grease, dirt, loose rust, and other foreign material to ensure adequate adhesion.

Iron & Steel, Atmospheric Service:
Minimum surface preparation is Hand Tool Clean per SSPC-SP2. Remove all oil and grease from surface by Solvent Cleaning per SSPC-SP1. For better performance, use Commercial Blast Cleaning per SSPC-SP6/NACE 3, blast clean all surfaces using a sharp, angular abrasive for optimum surface profile (2 mils / 50 microns). Prime any bare steel within 8 hours or before flash rusting occurs.

Iron & Steel, Immersion Service:
Remove all oil and grease from surface by Solvent Cleaning per SSPC-SP1. Minimum surface preparation is Near White Metal Blast Cleaning per SSPC-SP10/NACE 2. Blast clean all surfaces using a sharp, angular abrasive for optimum surface profile (2-3 mils / 50-75 microns). Remove all weld spatter and round all sharp edges by grinding. Prime any bare steel the same day as it is cleaned.

Aluminum
Remove all oil, grease, dirt, oxide and other foreign material by Solvent Cleaning per SSPC-SP1.

Galvanized Steel
Allow to weather a minimum of six months prior to coating. Solvent Clean per SSPC-SP1 (recommended solvent is VM&P Naphtha). When weathering is not possible, or the surface has been treated with chromates or silicates, first Solvent Clean per SSPC-SP1 and apply a test patch. Allow paint to dry at least one week before testing adhesion. If adhesion is poor, brush blasting per SSPC-SP7 is necessary to remove these treatments. Rusty galvanizing requires a minimum of Hand Tool Cleaning per SSPC-SP2, prime the area the same day as cleaned.
In preparing galvanized steel substrates for the application of FIRETEX intumescent coating systems, Surface Preparation Specification SSPC-SP 16 must be followed obtaining a surface profile of minimum 1.5 mils (38 microns). Optimum surface profile will not exceed 2.0 mils (50 microns).

Concrete and Masonry
For surface preparation, refer to SSPC-SP13/NACE 6, or ICRI No. 310.2R, CSP 1-3. Surfaces should be thoroughly clean and dry. Concrete and mortar must be cured at least 28 days @ 75°F (24°C). Remove all loose mortar and foreign material. Surface must be free of laitance, concrete dust, dirt, form release agents, moisture curing membranes, loose cement and hardeners. Fill bug holes, air pockets and other voids with Steel-Seam FT910.

Concrete, Immersion Service:
For surface preparation, refer to SSPC-SP13/NACE 6, Section 4.3.1 or 1.3.2 or ICRI No. 310.2R, CSP 2-4.

Follow the standard methods listed below when applicable:
ASTM D4258 Standard Practice for Cleaning Concrete.
ASTM D4259 Standard Practice for Abrading Concrete.
ASTM D4260 Standard Practice for Etching Concrete.
ASTM F1869 Standard Test Method for Measuring Moisture Vapor Emission Rate of Concrete.
SSPC-SP 13/Nace 6 Surface Preparation of Concrete.
ICRI No. 310.2R Concrete Surface Preparation.

Previously Painted Surfaces
If in sound condition, clean the surface of all foreign material. Smooth, hard or glossy coatings and surfaces should be dulled by abrading the surface. Apply a test area, allowing paint to dry one week before testing adhesion. If adhesion is poor, or if this product attacks the previous finish, removal of the previous coating may be necessary. If paint is peeling or badly weathered, clean surface to sound substrate and treat as a new surface as above.

Surface Preparation Standards

	Condition of Surface	ISO 8501-1 BS7079:A1	Swedish Std. SIS055900	SSPC	NACE
White Metal		Sa 3	Sa 3	SP 5	1
Near White Metal		Sa 2.5	Sa 2.5	SP 10	2
Commercial Blast		Sa 2	Sa 2	SP 6	3
Brush-Off Blast		Sa 1	Sa 1	SP 7	4
Hand Tool Cleaning	Rusted	C St 2	C St 2	SP 2	-
	Pitted & Rusted	D St 2	D St 2	SP 2	-
Power Tool Cleaning	Rusted	C St 3	C St 3	SP 3	-
	Pitted & Rusted	D St 3	D St 3	SP 3	-

APPLICATION CONDITIONS

Temperature:	35°F (1.7°C) minimum, 120°F (49°C) maximum (air and surface) 40°F (4.5°C) minimum, 120°F (49°C) maximum (material) At least 5°F (2.8°C) above dew point
Relative humidity:	85% maximum

APPLICATION EQUIPMENT

The following is a guide. Changes in pressures and tip sizes may be needed for proper spray characteristics. Always purge spray equipment before use with listed reducer. Any reduction must be compliant with existing VOC regulations and compatible with the existing environmental and application conditions.

Reducer/Clean Up .....Reducer R7K15
In California.....Reducer R7K111

Airless Spray
Pump.....30:1
Pressure.....2800 - 3000 psi
Hose.....1/4" ID
Tip .....017" - .023"
Filter .....60 mesh
Reduction.....As needed up to 10% by volume

Conventional Spray
Gun .....DeVilbiss MBC-510
Fluid Tip .....E
Air Nozzle.....704
Atomization Pressure.....60-65 psi
Fluid Pressure.....10-20 psi
Reduction.....As needed up to 10% by volume
Requires oil and moisture separators

Brush
Brush.....Nylon/Polyester or Natural Bristle
Reduction.....Not recommended

Roller
Cover .....3/8" woven with solvent resistant core
Reduction.....Not recommended

Plural Component Spray ...Acceptable
Refer to April 2010 Technical Bulletin - "Application Guidelines for Macropoxy 646 Fast Cure Epoxy & Recoatable Epoxy Primer Utilizing Plural Component Equipment"
If specific application equipment is not listed above, equivalent equipment may be substituted.

continued on back

Protective & Marine Coatings

MACROPOXY® 646 FAST CURE EPOXY

PART A	B58-600	SERIES
PART B	B58V600	HARDENER

Revised: October 8, 2014

APPLICATION BULLETIN

4.53

APPLICATION PROCEDURES

Surface preparation must be completed as indicated.

Mix contents of each component thoroughly with low speed power agitation. Make certain no pigment remains on the bottom of the can. Then combine one part by volume of Part A with one part by volume of Part B. Thoroughly agitate the mixture with power agitation. Allow the material to sweat-in as indicated prior to application. Re-stir before using.

If reducer solvent is used, add only after both components have been thoroughly mixed, after sweat-in.

Apply paint at the recommended film thickness and spreading rate as indicated below:

Recommended Spreading Rate per coat:

	Minimum	Maximum
Wet mils (microns)	**7.0** (175)	**13.5** (338)
Dry mils (microns)	**5.0*** (125)	**10.0*** (250)
~Coverage sq ft/gal (m^2/L)	**116** (2.8)	**232** (5.7)
Theoretical coverage **sq ft/gal** (m^2/L) @ 1 mil / 25 microns dft	**1152** (28.2)	

***May be applied at 3.0-10.0 mils (75-250 microns) dft in atmospheric conditions. Refer to Recommended Systems (page 2). See Performance Tips section also.**

NOTE: Brush or roll application may require multiple coats to achieve maximum film thickness and uniformity of appearance.

Drying Schedule @ 7.0 mils wet (175 microns):

	@ 35°F/1.7°C	@ 77°F/25°C *50% RH*	@ 100°F/38°C
To touch:	4-5 hours	2 hours	1.5 hours
To handle:	48 hours	8 hours	4.5 hours
To recoat:			
minimum:	48 hours	8 hours	4.5 hours
maximum:	1 year	1 year	1 year
To cure:			
Service:	10 days	7 days	4 days
Immersion:	14 days	7 days	4 days

If maximum recoat time is exceeded, abrade surface before recoating.

Drying time is temperature, humidity, and film thickness dependent.

Paint temperature must be at least 40°F (4.5°C) minimum.

Pot Life:	10 hours	4 hours	2 hours
Sweat-in-time:	30 minutes	30 minutes	15 minutes

When used as an intermediate coat as part of a multi-coat system:

Drying Schedule @ 5.0 mils wet (125 microns):

	@ 35°F/1.7°C	@ 77°F/25°C *50% RH*	@ 100°F/38°C
To touch:	3 hours	1 hour	1 hour
To handle:	48 hours	4 hours	2 hours
To recoat:			
minimum:	16 hours	4 hours	2 hours
maximum:	1 year	1 year	1 year

Application of coating above maximum or below minimum recommended spreading rate may adversely affect coating performance.

CLEAN UP INSTRUCTIONS

Clean spills and spatters immediately with Reducer R7K15. Clean tools immediately after use with Reducer R7K15. In California use Reducer R7K111. Follow manufacturer's safety recommendations when using any solvent.

PERFORMANCE TIPS

Stripe coat all crevices, welds, and sharp angles to prevent early failure in these areas.

When using spray application, use a 50% overlap with each pass of the gun to avoid holidays, bare areas, and pinholes. If necessary, cross spray at a right angle

Spreading rates are calculated on volume solids and do not include an application loss factor due to surface profile, roughness or porosity of the surface, skill and technique of the applicator, method of application, various surface irregularities, material lost during mixing, spillage, overthinning, climatic conditions, and excessive film build.

Excessive reduction of material can affect film build, appearance, and adhesion.

Do not mix previously catalyzed material with new.

Do not apply the material beyond recommended pot life.

In order to avoid blockage of spray equipment, clean equipment before use or before periods of extended downtime with Reducer R7K15. In California use Reducer R7K111.

Tinting is not recommended for immersion service.

Use only Mill White and Black for immersion service.

Insufficient ventilation, incomplete mixing, miscatalyzation, and external heaters may cause premature yellowing.

Excessive film build, poor ventilation, and cool temperatures may cause solvent entrapment and premature coating failure.

Quik-Kick Epoxy Accelerator is acceptable for use. See data page 4.99 for details.

When coating over aluminum and galvanizing, recommended dft is 2-4 mils (50-100 microns).

Acceptable for Concrete Floors.

Can be used as a metalizing sealer. Consult Technical Bulletin - Sealers for Thermal Spray Metalizing, or your local Sherwin-Williams representative.

Refer to Product Information sheet for additional performance characteristics and properties.

SAFETY PRECAUTIONS

Refer to the MSDS sheet before use.

Published technical data and instructions are subject to change without notice. Contact your Sherwin-Williams representative for additional technical data and instructions.

DISCLAIMER

The information and recommendations set forth in this Product Data Sheet are based upon tests conducted by or on behalf of The Sherwin-Williams Company. Such information and recommendations set forth herein are subject to change and pertain to the product offered at the time of publication. Consult your Sherwin-Williams representative to obtain the most recent Product Data Information and Application Bulletin.

WARRANTY

The Sherwin-Williams Company warrants our products to be free of manufacturing defects in accord with applicable Sherwin-Williams quality control procedures. Liability for products proven defective, if any, is limited to replacement of the defective product or the refund of the purchase price paid for the defective product as determined by Sherwin-Williams. NO OTHER WARRANTY OR GUARANTEE OF ANY KIND IS MADE BY SHERWIN-WILLIAMS, EXPRESSED OR IMPLIED, STATUTORY, BY OPERATION OF LAW OR OTHERWISE, INCLUDING MERCHANTABILITY AND FITNESS FOR A PARTICULAR PURPOSE.

107.10

PREPRITE®
Interior/Exterior Latex Block Filler
B25W25

GREENGUARD
PRODUCT CERTIFIED FOR LOW CHEMICAL EMISSIONS
UL.COM/GG
UL 2818
GOLD

As of 08/01/2013, Complies with:			
OTC	Yes	LEED® 09CI	Yes
SCAQMD	Yes	LEED® 09NC	Yes
CARB	Yes	LEED® 09CS	Yes
CARB	Yes	LEED® H & S	Yes
MPI Spec #	4	NGBS	Yes

CHARACTERISTICS

- Allows topcoat on **concrete block** to be smooth and uniform
- Effective on above-grade, unpainted masonry surfaces

Use on unpainted:
- Masonry
- Concrete
- Cement
- Flat Surfaced Concrete Block

Color: Off White
Coverage: 75-125 sq ft/gal @ 16 mils wet; 8 mils dry
Drying Time, @ 77°F, 50% RH:
temperature and humidity dependent
Touch: 2 hours
Recoat with latex based: 18 hours
Recoat with solvent based: 48 hours
Flash Point: N/A
Finish: 0-5 units @ 85°
Vehicle Type: Vinyl Acrylic
B25W00025
VOC (less exempt solvents):
<50 g/L; <0.42 lb/gal
As per 40 CFR 59.406 and SOR/2009-264, s.12
Volume Solids: 48 ± 2%
Weight Solids: 68 ± 2%
Weight per Gallon: 13.5 lb
WVP Perms (US) 35.5
grains/(hr ft^2 in Hg)

SPECIFICATION

Masonry, Concrete, Cement, Block
1 ct. PrepRite Block Filler
2 cts. Appropriate topcoat

Recommended Architectural Topcoats
A-100 Exterior Latex
Loxon Masonry Coating
SuperPaint Exterior
Duration Exterior

Duration Home
ProClassic Interior
ProMar Interior
SuperPaint Interior

Recommended Industrial Topcoats
DTM Acrylic Enamel
Industrial Enamel
Metalatex Semi-Gloss
Water Based Catalyzed Epoxy

Other topcoats may be appropriate.

Industrial topcoats have been tested for interior use only. PrepRite Block Filler has not been tested in environments subject to chemical attack. Any recommendations for use in such areas must follow a thorough evaluation of the effects of the environment on the PrepRite Block Filler and topcoat system.

SURFACE PREPARATION

WARNING! Removal of old paint by sanding, scraping or other means may generate dust or fumes that contain lead. Exposure to lead dust or fumes may cause brain damage or other adverse health effects, especially in children or pregnant women. Controlling exposure to lead or other hazardous substances requires the use of proper protective equipment, such as a properly fitted respirator (NIOSH approved) and proper containment and cleanup. For more information, call the National Lead Information Center at 1-800-424-LEAD (in US) or contact your local health authority.

Masonry, Concrete, Cement, Block
Remove all surface contamination, form release agents, moisture curing membranes, etc. by washing with an appropriate cleaner, rinse and allow to dry. Pressure wash the surface if needed. Remove existing peeled or checked paint to a sound surface. Concrete and mortar must be cured, generally 30 days, at 75°F before painting.

Complete removal of sealers, release compounds, and to provide a profile, tilt-up and poured-in-place concrete could require sandblasting or cleaning with commercial detergents. **Do not apply to smooth, slick surfaces, peeling may result.**

Masonry surfaces must be dry before priming. Moisture content must be 15% or lower, and the pH between 6 and 9. If the pH is greater than 9, use Loxon Block Surfacer in place of PrepRite Block Filler.

For repairing **exterior** cracks, bugholes, air pockets, and other voids use an elastomeric patch or seal..

continued on back

107.10

PREPRITE®

Interior/Exterior Latex Block Filler B25W25

SURFACE PREPARATION

Mildew
Remove before painting by washing with a solution of 1 part liquid bleach and 3 parts water. Apply the solution and scrub the mildewed area. Allow the solution to remain on the surface for 10 minutes. Rinse thoroughly with water and allow the surface to dry before painting. Wear protective eyewear, waterproof gloves, and protective clothing. Quickly wash off any of the mixture that comes in contact with your skin. Do not add detergents or ammonia to the bleach/water solution.

APPLICATION

Apply at temperatures above 50°F.
No reduction necessary.

Brush - Use a nylon/polyester brush.
Roller - Use a 3/8" to 1-1/2" nap cover.
Spray - Airless
Pressure.....2300 psi
Tip.....028"
Reduction.....as needed up to 1 pt/gal
Remove all in-line and gun filters

Spray application may be backrolled to work material into the surface. All application methods may be squeegeed to provide a very smooth surface.

CLEANUP INFORMATION

Clean spills and spatters immediately with soap and warm water. Clean hands and tools immediately after use with soap and warm water. After cleaning, flush spray equipment with mineral spirits to prevent rusting of the equipment. Follow manufacturer's safety recommendations when using mineral spirits.

CAUTIONS

For interior and exterior use.
Must be topcoated for exterior use.
Protect from freezing.
Do not apply to damp or wet surfaces.

CAUTION contains CRYSTALLINE SILICA. Use only with adequate ventilation. To avoid overexposure, open windows and doors or use other means to ensure fresh air entry during application and drying. If you experience eye watering, headaches, or dizziness, increase fresh air, or wear respiratory protection (NIOSH approved) or leave the area. Adequate ventilation required when sanding or abrading the dried film. If adequate ventilation cannot be provided wear an approved particulate respirator (NIOSH approved). Follow respirator manufacturer's directions for respirator use. Avoid contact with eyes and skin. Wash hands after using. Keep container closed when not in use. Do not transfer contents to other containers for storage. FIRST AID: In case of eye contact, flush thoroughly with large amounts of water. Get medical attention if irritation persists. If swallowed, call Poison Control Center, hospital emergency room, or physician immediately. DELAYED EFFECTS FROM LONG TERM OVEREXPOSURE. Abrading or sanding of the dry film may release crystalline silica which has been shown to cause lung damage and cancer under long term exposure. WARNING: This product contains chemicals known to the State of California to cause cancer and birth defects or other reproductive harm. DO NOT TAKE INTERNALLY. KEEP OUT OF THE REACH OF CHILDREN.

HOTW 09/22/2008 B25W00025 25 00

The information and recommendations set forth in this Product Data Sheet are based upon tests conducted by or on behalf of The Sherwin-Williams Company. Such information and recommendations set forth herein are subject to change and pertain to the product offered at the time of publication. Consult your Sherwin-Williams representative to obtain the most recent Product Data Sheet.

PRO INDUSTRIAL™

113.01

PRE-CATALYZED WATERBASED EPOXY

K45-150 SERIES EG-SHEL
K46-150 SERIES SEMI-GLOSS

As of 03/01/2013, Complies with:			
OTC	Yes	LEED® 09 CI	Yes
SCAQMD	No	LEED® 09 NC	Yes
CARB	Yes	LEED® 09 CS	Yes
CARB SCM 2007	Yes	LEED® 09 S	Yes
NGBS	Yes		
MPI # Eg-Shel-139.151;Semi-Gloss - 141.153			

CHARACTERISTICS

Pro Industrial Pre-Catalyzed Water-based Epoxies are revolutionary, single-component pre-catalyzed waterborne acrylic epoxies that offers the adhesion, durability and resistance to stains and most cleaning solvents usually characteristic of two-component waterborne acrylic epoxy products.

These products can be applied over a wide variety of primers on properly prepared **interior** metal, wood, masonry, plaster and drywall.

- Interior institutional/commercial high maintenance areas
- Upgrade surfaces painted with conventional coatings with a high performance protection system with excellent adhesion
- Corrosion and Chemical resistant
- Hospitals and Schools
- Institutional dining and kitchen areas
- Suitable for use in USDA inspected facilities

Color: most colors

Recommended Spread Rate per coat:
4.0 mils wet; 1.5 mils dry
350 - 400 sq ft/gal

NOTE: Brush or roll application may require multiple coats to achieve maximum film thickness and uniformity of appearance.

Drying Time @ 4.0 mils wet, 50% RH, 77°F: temperature and humidity dependent

Touch: 1 hour
Recoat: 8 hours

Drying time is temperature, humidity, and film thickness dependent.

Finish:
Eg-Shel 20 - 30 units @ 85°
Semi-Gloss 55 - 65 units @ 60°

Flash Point: N/A

Shelf Life: 36 months, unopened
Store indoors at 40°F to 100°F.

Tinting with CCE or BAC:
Use SherCOLOR Formulation System
K45W00151

VOC (less exempt solvents):
<150 g/L; 1.25 lb/gal

Volume Solids: 37 ± 2%

Weight Solids: 51 ± 2%

Weight per Gallon: 10.6 lb ± 0.2 lb

RECOMMENDED SYSTEMS

Block
1 ct. Loxon Block Surfacer
2 cts. Pro Industrial Pre-Catalyzed Epoxy

Drywall
1 ct. ProMar 200 Primer
2 cts. Pro Industrial Pre-Catalyzed Epoxy

Masonry
1 ct. Loxon Masonry Primer
2 cts. Pro Industrial Pre-Catalyzed Epoxy

Steel, Aluminum, Galvanized
1 ct. Pro Industrial Pro-Cryl Primer
2 cts. Pro Industrial Pre-Catalyzed Epoxy

Wood
1 ct. Premium Wall and Wood Primer
2 cts. Pro Industrial Pre-Catalyzed Epoxy

System Tested:
Substrate: Steel
Surface Preparation: SSPC-SP6
Primer: 1 ct. DTM Acrylic Primer
Finish: 1 ct. Pro Industrial Pre-Catalyzed Epoxy Eg-Shel

Adhesion
Method: ASTM D3359
Result: 5B
100% Adhesion for light colors; Darker colors require longer cure time for same level of adhesion

Block Resistance
Lab Assessment Excellent

Pencil Hardness:
Method: ASTM D3363
Result: 2B

Scrub Resistance
Method: ASTM D 2486
Result: 500 - 600cycles
with Stiff Bristle Brush and Pumice Scrub Media

Chemical Resistance
ASTM D 1308 Rating:

Excellent Resistance	•
Limited Resistance	x

Distilled Water
(Hot and at Room Temperature) ..... •
Ethyl Alcohol ..... •
Vinegar (3% acetic acid) ..... •
Alkali (10% Sodium Hydroxide) ..... •
Acid (10% Sulfuric Acid) ..... •
Soap (10% Fantastik®) ..... •
50/50 Xylene/Mineral Spirits ..... •

Stain Resistance
ASTM D 3023 Rating:

Excellent Resistance	•
Limited Resistance	x

Mustard ..... •
Grape Juice ..... •
Red Crayon x
Lipstick, Red ..... •
Permanent Ink x
Coffee ..... •
10% Sodium Hydroxide (alkali) ..... •
Acetic Acid ..... •

PRO INDUSTRIAL™
PRE-CATALYZED WATERBASED EPOXY

SURFACE PREPARATION

WARNING! Removal of old paint by sanding, scraping or other means may generate dust or fumes that contain lead. Exposure to lead dust or fumes may cause brain damage or other adverse health effects, especially in children or pregnant women. Controlling exposure to lead or other hazardous substances requires the use of proper protective equipment, such as a properly fitted respirator (NIOSH approved) and proper containment and cleanup. For more information, call the National Lead Information Center at 1-800-424-LEAD (in US) or contact your local health authority.

Remove all surface contamination including mildew by washing with an appropriate cleaner, rinse thoroughly and allow to dry. Scrape and sand peeled or checked paint to a sound surface. Sand glossy surfaces dull. Seal stains from water, smoke, ink, pencil, grease, etc. with an appropriate primer/sealer.

Iron & Steel - Minimum surface preparation is Hand Tool Clean per SSPC-SP2. Remove all oil and grease from surface per SSPC-SP1. For better performance, use Commercial Blast Cleaning per SSPC-SP6. Primer recommended for best performance.

Aluminum - Remove all oil, grease, dirt, oxide and other foreign material per SSPC-SP1.

Galvanizing - Allow to weather a minimum of six months prior to coating. Solvent Clean per SSPC-SP1. When weathering is not possible, or the surface has been treated with chromates or silicates, first Solvent Clean per SSPC-SP1 and apply a test patch. Allow paint to dry at least one week before testing adhesion. If adhesion is poor, brush blasting per SSPC-SP7 is necessary to remove these treatments. Rusty galvanizing requires a minimum of Hand Tool Cleaning per SSPC-SP2, prime the area the same day as cleaned.

Concrete and Masonry - For surface preparation, refer to SSPC-SP13/NACE 6 or ICRI 03732, CSP 1-3. Surfaces should be thoroughly cleaned and dry. Surface temperatures must be at least 55°F before filling. If required for a smoother finish, use the recommended filler/surfacer. The filler/surfacer must be thoroughly dry before topcoating per manufacturer's recommendations.
Weathered masonry and soft or porous cement board must be brush blasted or power tool cleaned to remove loosely adhering contamination and to get to a hard, firm surface. Apply one coat Loxon Conditioner, following label recommendations.

Drywall - Fill cracks and holes with patching paste/spackle and sand smooth. Joint compounds must be cured and sanded smooth. Remove all sanding dust.

Wood - Sand any exposed wood to a fresh surface. Patch all holes and imperfections with a wood filler or putty and sand smooth.

Previously Painted Surfaces - If in sound condition, clean the surface of all foreign material. Smooth, hard or glossy coatings and surfaces should be dulled by abrading the surface. Apply a test area, allowing paint to dry one week before testing adhesion. If adhesion is poor, additional abrasion of the surface and/or removal of the previous coating may be necessary. Retest surface for adhesion. If paint is peeling or badly weathered, clean surface to sound substrate and treat as a new surface as above.

APPLICATION

Refer to the MSDS before use.
Temperature: 50°F minimum
120°F maximum
(Air, surface, and material)
At least 5°F above dew point
Relative humidity: 85% maximum

The following is a guide. Changes in pressures and tip sizes may be needed for proper spray characteristics. Always purge spray equipment before use with listed reducer. Any reduction must be compatible with the existing environmental and application conditions.

Airless Spray
Pressure ..... 1800 - 2700 psi
Hose ..... 1/4" ID
Tip ..... .015" - .021"
Filter ..... 60 mesh
Reduction .....Not recommended

Brush ..... Nylon / polyester
Reduction .....Not recommended

Roller ..... 1/4 - 1/2" woven
Reduction .....Not recommended

If specific application equipment is listed above, equivalent equipment may be substituted.

CLEANUP INFORMATION

Clean spills, spatters, hands and tools immediately after use with soap and warm water. After cleaning, flush spray equipment with mineral spirits to prevent rusting of the equipment. Follow manufacturer's safety recommendations when using mineral spirits.

CAUTION

Not for use on surfaces continuously wet or under water, such as bath tubs, sinks, showers, or countertops.

The information and recommendations set forth in this Product Data Sheet are based upon tests conducted by or on behalf of The Sherwin-Williams Company. Such information and recommendations set forth herein are subject to change and pertain to the product offered at the time of publication. Consult your Sherwin-Williams representative to obtain the most recent Product Data Information and Application Bulletin. The Sherwin-Williams Company warrants our products to be free of manufacturing defects in accord with applicable Sherwin-Williams quality control procedures. Liability for products proven defective, if any, is limited to replacement of the defective product or the refund of the purchase price paid for the defective product as determined by Sherwin-Williams. NO OTHER WARRANTY OR GUARANTEE OF ANY KIND IS MADE BY SHERWIN-WILLIAMS, EXPRESSED OR IMPLIED, STATUTORY, BY OPERATION OF LAW OR OTHERWISE, INCLUDING MERCHANTABILITY AND FITNESS FOR A PARTICULAR PURPOSE.

Protective & Marine Coatings

RECOATABLE EPOXY PRIMER

PART G	B67A5	LIGHT GRAY
PART G	B67H5	TAN
PART G	B67R5	RED OXIDE
PART H	B67V5	HARDENER

Revised: February 11, 2013

PRODUCT INFORMATION

4.45

PRODUCT DESCRIPTION

RECOATABLE EPOXY PRIMER is a rust inhibitive high build catalyzed polyamide/bisphenol A epoxy primer designed for fast dry and quick or extended recoatability.

- Meets Class A requirements for Slip Coefficient, .50 (Red Oxide only)
- Long pot life
- High build coating for economical application
- One year recoatability
- Low temperature application - down to 35°F (1.5°C)
- Corrosion resistant (contains zinc phosphate)
- Outstanding application properties

PRODUCT CHARACTERISTICS

Finish:	Flat
Color:	Red Oxide, Tan, Light Gray
Volume Solids:	65% ± 2%, mixed
Weight Solids:	81% ± 2%, mixed
VOC (EPA Method 24): mixed	Unreduced: <320 g/L; 2.67 lb/gal Reduced 5%: <340 g/L; 2.88 lb/gal
Mix Ratio:	1:1 by volume

Recommended Spreading Rate per coat:

	Minimum	Maximum
Wet mils (microns)	**6.0** (150)	**9.0** (225)
Dry mils (microns)	**4.0*** (100)	**6.0*** (150)
~Coverage sq ft/gal (m^2/L)	**175** (4.3)	**260** (6.4)
Theoretical coverage **sq ft/gal** (m^2/L) @ 1 mil / 25 microns dft	**1040** (25.5)	

*See Performance Tips section

NOTE: Brush or roll application may require multiple coats to achieve maximum film thickness and uniformity of appearance.

Drying Schedule @ 6.0 mils wet (150 microns):

	@ 35°F/1.5°C	@ 77°F/25°C *50% RH*	@ 120°F/49°C
To touch:	1 hour	15 minutes	10 minutes
Tack free:	2 hours	30 minutes	15 minutes
To recoat:			
minimum:	6 hours	2 hours	30 minutes
maximum:	1 year	1 year	1 year
To cure:	14 days	14 days	2 days
Pot Life:	8+ hours	8 hours	3 hours
Sweat-in-time:	1 hour	30 minutes	10 minutes

If maximum recoat time is exceeded, abrade surface before recoating.

Drying time is temperature, humidity, and film thickness dependent.

Shelf Life:	36 months, unopened Store indoors at 40°F (4.5°C) to 100°F (38°C).
Flash Point:	80°F (27°C), PMCC, mixed
Reducer/Clean Up:	
Below 80°F (27°C):	Reducer #54, R7K54
Above 80°F (27°C):	Reducer #100, R7K100 or R7K104
In California:	Reducer R7K111

RECOMMENDED USES

For use as a shop or field applied epoxy primer where a variable recoat window is required due to construction schedules, distribution logistics and environmental considerations. Affords flexibility in projects when completion schedules cannot be specified.

- Primer for structural steel
- Paper mills
- Power plants
- Suitable for use in USDA inspected facilities
- Nuclear Power Plants
- Nuclear fabrication shops
- This product meets specific design requirements for non-safety related nuclear plant applications in Level II, III and Balance of Plant, and DOE nuclear facilities*.
- Marine applications
- Storage tanks
- DOE Nuclear Fuel Facilities
- DOE Nuclear Weapons Facilities

* Nuclear qualifications are NRC license specific to the facility.

PERFORMANCE CHARACTERISTICS

Substrate*: Steel

Surface Preparation*: SSPC-SP6/NACE 3

System Tested*:

1 ct. Recoatable Epoxy Primer @ 5.0 mils (125 microns) dft

*unless otherwise noted below

Test Name	Test Method	Results
Abrasion Resistance	ASTM D4060, CS17 wheel, 1000 cycles, 1 kg load	200 mg loss
Accelerated Weathering - QUV[1]	ASTM D4587, QUV-A, 5,000 hours	Passes
Adhesion	ASTM D4541	1050 psi
Corrosion Weathering	ASTM D5894, 13 cycles, 4,368 hours	Rating 10 per ASTM D714 for Blistering; Rating 7 per ASTM D610 for Rusting
Direct Impact Resistance	ASTM D2794	160 in. lbs.
Dry Heat Resistance	ASTM D2485	250°F (121°C) (discolors)
Flexibility	ASTM D522, 180° bend, 1" mandrel	Passes
Moisture Condensation Resistance	ASTM D4585, 100°F (38°C), 2000 hours	Passes, no cracking or delamination
Pencil Hardness	ASTM D3363	3H
Salt Fog Resistance[1]	ASTM B117, 5,600 hours	Passes, no cracking or delamination
Slip Coefficient, Red Oxide**	AISC Specification for Structural Joints Using ASTM A325 or ASTM A490 Bolts	Class A, 0.50
Surface Burning*	ASTM E84/NFPA 255	Flame Spread Index 15; Smoke Development Index 30

*System tested (Report No. IM54.1157-02-01):
Recoatable Epoxy Primer @ 4.6 mils (115 microns) dft
Macropoxy 646 @ 5.0 mils (125 microns) dft

**Refer to Slip Certification document

Epoxy coatings may darken or yellow following application and curing.

Provides performance comparable to products formulated to federal specifications: Mil-P-23377, Mil-P-53022

Footnotes:
[1] Acrolon 218 HS topcoat

continued on back

Protective & Marine Coatings RECOATABLE EPOXY PRIMER

PART G	B67A5	LIGHT GRAY
PART G	B67H5	TAN
PART G	B67R5	RED OXIDE
PART H	B67V5	HARDENER

PRODUCT INFORMATION

4.45

RECOMMENDED SYSTEMS

		Dry Film Thickness / ct. Mils	(Microns)
Steel, catalyzed epoxy topcoat:			
1 ct.	Recoatable Epoxy Primer	4.0-6.0	(100-150)
2 cts.	Tile-Clad HS Epoxy	2.5-4.0	(63-100)
Steel, polyurethane topcoat:			
1 ct.	Recoatable Epoxy Primer	4.0-6.0	(100-150)
1-2 cts.	Hi-Solids Polyurethane	3.0-4.0	(75-100)
Steel, acrylic epoxy topcoat:			
1 ct.	Recoatable Epoxy Primer	4.0-6.0	(100-150)
2 cts.	Water Based Catalyzed Epoxy	2.5-3.0	(63-75)
Steel, acrylic topcoat:			
1 ct.	Recoatable Epoxy Primer	4.0-6.0	(100-150)
2 cts.	DTM Acrylic Coating	2.5-4.0	(63-100)
Galvanized:			
1 ct.	Recoatable Epoxy Primer	4.0-6.0	(100-150)
2 cts.	Tile-Clad HS Epoxy	2.5-4.0	(63-100)
FIRETEX ONLY:			
Steel & Galvanized Substrates being primed for FIRETEX only:			
1 ct.	Recoatable Epoxy Primer	2.0-5.0	(50-125)

The systems listed above are representative of the product's use, other systems may be appropriate.

DISCLAIMER

The information and recommendations set forth in this Product Data Sheet are based upon tests conducted by or on behalf of The Sherwin-Williams Company. Such information and recommendations set forth herein are subject to change and pertain to the product offered at the time of publication. Consult your Sherwin-Williams representative to obtain the most recent Product Data Information and Application Bulletin.

SURFACE PREPARATION

Surface must be clean, dry, and in sound condition. Remove all oil, dust, grease, dirt, loose rust, and other foreign material to ensure adequate adhesion.

Refer to product Application Bulletin for detailed surface preparation information.

Minimum recommended surface preparation:

Iron & Steel: SSPC-SP6/NACE 3, 2 mil (50 micron) profile

Galvanizing*: SSPC-SP1

*See Surface Preparations section on page 3 for application of FIRETEX intumescent coating systems

Surface Preparation Standards

	Condition of Surface	ISO 8501-1 BS7079:A1	Swedish Std. SIS055900	SSPC	NACE
White Metal		Sa 3	Sa 3	SP 5	1
Near White Metal		Sa 2.5	Sa 2.5	SP 10	2
Commercial Blast		Sa 2	Sa 2	SP 6	3
Brush-Off Blast		Sa 1	Sa 1	SP 7	4
Hand Tool Cleaning	Rusted	C St 2	C St 2	SP 2	-
	Pitted & Rusted	D St 2	D St 2	SP 2	-
Power Tool Cleaning	Rusted	C St 3	C St 3	SP 3	-
	Pitted & Rusted	D St 3	D St 3	SP 3	-

TINTING

Do not tint.

APPLICATION CONDITIONS

Temperature:

air and surface: 35°F (1.6°C) minimum, 140°F (60°C) maximum

material: 50°F (10°C) minimum
At least 5°F (2.8°C) above dew point

Relative humidity: 85% maximum

Refer to product Application Bulletin for detailed application information.

ORDERING INFORMATION

Packaging:

Part G: 1 gallon (3.78L) and 5 gallon (18.9L) containers

Part H: 1 gallon (3.78L) and 5 gallon (18.9L) containers

Weight: 13.26 ± 0.2 lb/gal ; 1.6 Kg/L, mixed

SAFETY PRECAUTIONS

Refer to the MSDS sheet before use.

Published technical data and instructions are subject to change without notice. Contact your Sherwin-Williams representative for additional technical data and instructions.

WARRANTY

The Sherwin-Williams Company warrants our products to be free of manufacturing defects in accord with applicable Sherwin-Williams quality control procedures. Liability for products proven defective, if any, is limited to replacement of the defective product or the refund of the purchase price paid for the defective product as determined by Sherwin-Williams. NO OTHER WARRANTY OR GUARANTEE OF ANY KIND IS MADE BY SHERWIN-WILLIAMS, EXPRESSED OR IMPLIED, STATUTORY, BY OPERATION OF LAW OR OTHERWISE, INCLUDING MERCHANTABILITY AND FITNESS FOR A PARTICULAR PURPOSE.

Protective & Marine Coatings

RECOATABLE EPOXY PRIMER

PART G	B67A5	LIGHT GRAY
PART G	B67H5	TAN
PART G	B67R5	RED OXIDE
PART H	B67V5	HARDENER

Revised: February 11, 2013

APPLICATION BULLETIN

4.45

SURFACE PREPARATIONS

Surface must be clean, dry, and in sound condition. Remove all oil, dust, grease, dirt, loose rust, and other foreign material to ensure adequate adhesion.

Iron & Steel (atmospheric service)
Remove all oil and grease from surface by Solvent Cleaning per SSPC-SP1. Minimum surface preparation is Commercial Blast Cleaning per SSPC-SP6/NACE 3. For better performance, use Near White Metal Blast Cleaning per SSPC-SP10/NACE 2. Blast clean all surfaces using a sharp, angular abrasive for optimum surface profile (2 mils / 50 microns). Prime any bare steel the same day as it is cleaned.

Galvanized Steel
Allow to weather a minimum of six months prior to coating. Solvent Clean per SSPC-SP1. When weathering is not possible, or the surface has been treated with chromates or silicates, first Solvent Clean per SSPC-SP1 and apply a test patch. Allow paint to dry at least one week before testing adhesion. If adhesion is poor, brush blasting per SSPC-SP7 is necessary to remove these treatments. Rusty galvanizing requires a minimum of Hand Tool Cleaning per SSPC-SP2, prime the area the same day as cleaned.

In preparing galvanized steel substrates for the application of FIRETEX intumescent coating systems, Surface Preparation Specification SSPC-SP 16 must be followed obtaining a surface profile of minimum 1.5 mils (38 microns). Optimum surface profile will not exceed 2.0 mils (50 microns).

Previously Painted Surfaces
If in sound condition, clean the surface of all foreign material. Smooth, hard or glossy coatings and surfaces should be dulled by abrading the surface. Apply a test area, allowing paint to dry one week before testing adhesion. If adhesion is poor, or if this product attacks the previous finish, removal of the previous coating may be necessary. If paint is peeling or badly weathered, clean surface to sound substrate and treat as a new surface as above.

Surface Preparation Standards

	Condition of Surface	ISO 8501-1 BS7079:A1	Swedish Std. SIS055900	SSPC	NACE
White Metal		Sa 3	Sa 3	SP 5	1
Near White Metal		Sa 2.5	Sa 2.5	SP 10	2
Commercial Blast		Sa 2	Sa 2	SP 6	3
Brush-Off Blast		Sa 1	Sa 1	SP 7	4
Hand Tool Cleaning	Rusted	C St 2	C St 2	SP 2	-
	Pitted & Rusted	D St 2	D St 2	SP 2	-
Power Tool Cleaning	Rusted	C St 3	C St 3	SP 3	-
	Pitted & Rusted	D St 3	D St 3	SP 3	-

APPLICATION CONDITIONS

Temperature:	
air and surface:	35°F (1.6°C) minimum, 140°F (60°C) maximum
material:	50°F (10°C) minimum At least 5°F (2.8°C) above dew point
Relative humidity:	85% maximum

APPLICATION EQUIPMENT

The following is a guide. Changes in pressures and tip sizes may be needed for proper spray characteristics. Always purge spray equipment before use with listed reducer. Any reduction must be compliant with existing VOC regulations and compatible with the existing environmental and application conditions.

Reducer/Clean Up
Below 80°F (27°C) .....Reducer #54, R7K54
Above 80°F (27°C).....Reducer #100, R7K100 or R7K104
In California.....Reducer R7K111

Airless Spray
Pressure.....2400 psi
Hose.....1/4" ID
Tip .....017"
Filter.....60 mesh
Reduction.....As needed up to 5% by volume

Brush
Brush.....Natural Bristle
Reduction.....Not recommended

Roller
Cover .....3/8" - 1/2" woven with solvent resistant core
Reduction.....Not recommended

Plural Component Spray...Acceptable
Refer to April 2010 Technical Bulletin - "Application Guidelines for Macropoxy 646 & Recoatable Epoxy Primer Utilizing Plural Component Equipment"

If specific application equipment is not listed above, equivalent equipment may be substituted.

continued on back

Protective & Marine Coatings RECOATABLE EPOXY PRIMER

PART G	B67A5	LIGHT GRAY
PART G	B67H5	TAN
PART G	B67R5	RED OXIDE
PART H	B67V5	HARDENER

APPLICATION BULLETIN

4.45

APPLICATION PROCEDURES

Surface preparation must be completed as indicated.

Mix contents of each component thoroughly with low speed power agitation. Make certain no pigment remains on the bottom of the cans. Then combine one part by volume of Part G with one part by volume of Part H. Thoroughly agitate the mixture with power agitation. Allow the material to sweat-in as indicated. Re-stir before using.

If reducer solvent is used, add only after both components have been thoroughly mixed, after sweat-in.

Apply paint at the recommended film thickness and spreading rate as indicated below:

Recommended Spreading Rate per coat:

	Minimum	Maximum
Wet mils (microns)	**6.0** (150)	**9.0** (225)
Dry mils (microns)	**4.0*** (100)	**6.0*** (150)
~Coverage sq ft/gal (m^2/L)	**175** (4.3)	**260** (6.4)
Theoretical coverage **sq ft/gal** (m^2/L) @ 1 mil / 25 microns dft	**1040** (25.5)	

*See Performance Tips section

NOTE: Brush or roll application may require multiple coats to achieve maximum film thickness and uniformity of appearance.

Drying Schedule @ 6.0 mils wet (150 microns):

	@ 35°F/1.5°C	@ 77°F/25°C *50% RH*	@ 120°F/49°C
To touch:	1 hour	15 minutes	10 minutes
Tack free:	2 hours	30 minutes	15 minutes
To recoat:			
minimum:	6 hours	2 hours	30 minutes
maximum:	1 year	1 year	1 year
To cure:	14 days	14 days	2 days

If maximum recoat time is exceeded, abrade surface before recoating.

Drying time is temperature, humidity, and film thickness dependent.

Pot Life:	8+ hours	8 hours	3 hours
Sweat-in-time:	1 hour	30 minutes	10 minutes

Application of coating above maximum or below minimum recommended spreading rate may adversely affect coating performance.

CLEAN UP INSTRUCTIONS

Clean spills and spatters immediately with Reducer #54, R7K54. Clean tools immediately after use with Reducer #54, R7K54. Follow manufacturer's safety recommendations when using any solvent.

DISCLAIMER

The information and recommendations set forth in this Product Data Sheet are based upon tests conducted by or on behalf of The Sherwin-Williams Company. Such information and recommendations set forth herein are subject to change and pertain to the product offered at the time of publication. Consult your Sherwin-Williams representative to obtain the most recent Product Data Information and Application Bulletin.

PERFORMANCE TIPS

Stripe coat all crevices, welds, and sharp angles to prevent early failure in these areas.

When using spray application, use a 50% overlap with each pass of the gun to avoid holidays, bare areas, and pinholes. If necessary, cross spray at a right angle.

Spreading rates are calculated on volume solids and do not include an application loss factor due to surface profile, roughness or porosity of the surface, skill and technique of the applicator, method of application, various surface irregularities, material lost during mixing, spillage, overthinning, climatic conditions, and excessive film build.

Excessive reduction of material can affect film build, appearance, and adhesion.

Do not apply the material beyond recommended pot life.

Do not mix previously catalyzed material with new.

In order to avoid blockage of spray equipment, clean equipment before use or before periods of extended downtime with Reducer #54, R7K54.

Material must be at least 50°F (10°C) prior to catalyzing.

Quik-Kick Epoxy Accelerator is acceptable for use. See data page 4.99 for details.

When coating over aluminum and galvanizing, recommended dft is 2-4 mils (50-100 microns).

Refer to Product Information sheet for additional performance characteristics and properties.

SAFETY PRECAUTIONS

Refer to the MSDS sheet before use.

Published technical data and instructions are subject to change without notice. Contact your Sherwin-Williams representative for additional technical data and instructions.

WARRANTY

The Sherwin-Williams Company warrants our products to be free of manufacturing defects in accord with applicable Sherwin-Williams quality control procedures. Liability for products proven defective, if any, is limited to replacement of the defective product or the refund of the purchase price paid for the defective product as determined by Sherwin-Williams. NO OTHER WARRANTY OR GUARANTEE OF ANY KIND IS MADE BY SHERWIN-WILLIAMS, EXPRESSED OR IMPLIED, STATUTORY, BY OPERATION OF LAW OR OTHERWISE, INCLUDING MERCHANTABILITY AND FITNESS FOR A PARTICULAR PURPOSE.

Protective & Marine Coatings

HI-SOLIDS POLYURETHANE

PART S	B65-300	GLOSS SERIES
PART S	B65-350	SEMI-GLOSS SERIES
PART S	B65WW305	MR, WHITE TINT BASE (GLOSS)
PART T	B60V30	HARDENER

Revised: June 5, 2013

PRODUCT INFORMATION

5.21

PRODUCT DESCRIPTION

HI-SOLIDS POLYURETHANE is a two-component, low VOC, aliphatic, acrylic polyurethane resin coating. It is designed for high performance protection with outstanding exterior gloss and color retention.

- Good/excellent resistance to corrosion and weathering
- Outstanding color and gloss retention
- Chemical resistant
- Part of a system tested for nuclear irradiation and decontamination, Level II
- Resists film attack by mildew (MR White only)
- Outstanding application properties

PRODUCT CHARACTERISTICS

Finish:	High Gloss or Semi-Gloss
Color:	Wide range of colors possible
Volume Solids:	65% ± 2%, mixed, may vary by color
Weight Solids:	77% ± 2%, mixed, may vary by color
VOC (EPA Method 24):	Unreduced: <340g/L; 2.80 lb/gal mixed Reduced 15%: <370 g/L; 3.08 lb/gal May vary by color
Mix Ratio:	4:1 by volume

Recommended Spreading Rate per coat:

	Minimum	Maximum
Wet mils (microns)	**4.5** (112)	**8.0** (200)
Dry mils (microns)	**3.0** (75)	**5.0** (125)
~Coverage sq ft/gal (m^2/L)	**208** (5.1)	**347** (8.5)
Theoretical coverage sq ft/gal (m^2/L) @ 1 mil / 25 microns dft	**1040** (25.5)	

NOTE: Brush or roll application may require multiple coats to achieve maximum film thickness and uniformity of appearance.

Drying Schedule @ 4.5 mils wet (112 microns):

	@ 40°F/4.5°C	@ 77°F/25°C *50% RH*	@ 120°F/49°C
To touch:	4 hours	2 hours	1 hour
To handle:	16 hours	8 hours	5 hours
To recoat:			
minimum	24 hours	18 hours	10 hours
maximum	14 days	14 days	14 days
To cure:	14 days	10 days	7 days
Pot Life:	8 hours	4 hours	2 hours
Sweat-in-Time:		None required	

If maximum recoat time is exceeded, abrade surface before recoating. Drying time is temperature, humidity, and film thickness dependent.

Shelf Life:	Part S - 36 months, unopened Part T - 24 months, unopened Store indoors at 40°F (4.5°C) to 100°F (38°C).
Flash Point:	80°F (27°C), PMCC, mixed
Reducer/Clean Up: Below 80°F (27°C): Above 80°F (27°C):	 Reducer #69, R7K69 or R7K111 Reducer #58, R7K58 or R6K32

RECOMMENDED USES

- For use over prepared substrates in industrial environments
- Heavy duty interior and exterior structural coating
- A chemical and abrasion resistant equipment and machinery finish
- A gloss and color retentive heavy duty maintenance coating for use in "high visibility" areas
- Exterior surfaces of steel tanks • Refineries • Clean rooms
- Chemical processing equipment • Conveyors • Handrails
- Marine & Offshore Applications • Power Plants
- Resists film attack by mildew (MR White only)
- Suitable for use in USDA inspected facilities
- Conforms to AWWA D102 OCS #5 & #6.
- Acceptable for use in high performance architectural applications
- As topcoat for NEPCOAT System A
- Over FIRETEX hydrocarbon systems

PERFORMANCE CHARACTERISTICS

Substrate*: Steel

Surface Preparation*: SSPC-SP6/NACE 3

System Tested*:

1 ct. Recoatable Epoxy Primer @ 4.0 mils (100 microns) dft
1 ct. Hi-Solids Polyurethane Gloss @ 3.0 mils (75 microns) dft

*unless otherwise noted below

Test Name	Test Method	Results
Abrasion Resistance	ASTM D4060, CS17 wheel, 1000 cycles, 1 kg load	87.1 mg loss
Adhesion	ASTM D4541	1050 psi
Corrosion Weathering[1]	ASTM D5894, 21 cycles, 7056 hours	Rating 10 per ASTM D714 for blistering; Rating 9 per ASTM D610 for rusting
Direct Impact Resistance	ASTM D2794	>28 in. lbs.
Dry Heat Resistance	ASTM D2485	200°F (93°C)
Flexibility	ASTM D522, 180° bend, 1/8" mandrel	Passes
Moisture Condensation Resistance	ASTM D4585, 100°F (38°C), 1000 hours	No rusting, blistering, or delamination
Pencil Hardness	ASTM D3363	F
Salt Fog Resistance[1]	ASTM B117, 9000 hours	Rating 10 per ASTM D714 for blistering; Rating 9 per ASTM D610 for rusting
Surface Burning	ASTM E84	Flame Spread Index 0; Smoke Development Index 0 (at 3.5 mils or 88 microns)
Thermal Shock	ASTM D2246, 15 cycles	Excellent

Meets the requirements of SSPC Paint No. 36, Level 3 for white and light colors. Dark colors may require a clear coat.

Footnotes:

[1] Primer: Zinc Clad II Plus; Intermediate - Recoatable Epoxy Primer

continued on back

Protective & Marine Coatings

HI-SOLIDS POLYURETHANE

PART S	B65-300	GLOSS SERIES
PART S	B65-350	SEMI-GLOSS SERIES
PART S	B65WW305	MR, WHITE TINT BASE (GLOSS)
PART T	B60V30	HARDENER

PRODUCT INFORMATION

5.21

RECOMMENDED SYSTEMS

		Dry Film Thickness / ct. Mils	(Microns)
Steel: Epoxy Primer			
1 ct.	Recoatable Epoxy Primer	4.0-6.0	(100-150)
1-2 cts.	Hi-Solids Polyurethane	3.0-5.0	(75-125)
Steel: Epoxy Primer			
1 ct.	Dura-Plate 235	4.0-8.0	(100-200)
1-2 cts.	Hi-Solids Polyurethane	3.0-5.0	(75-125)
Steel: Zinc Rich Primer			
1 ct.	Zinc Clad II Plus	2.0-4.0	(50-100)
1 ct.	Macropoxy 646	5.0-10.0	(125-250)
1-2 cts.	Hi-Solids Polyurethane	3.0-5.0	(75-125)
Steel: Epoxy Mastic Primer			
1 ct.	Macropoxy 646	5.0-10.0	(125-250)
1-2 cts.	Hi-Solids Polyurethane	3.0-5.0	(75-125)
Steel: Universal Primer			
1 ct.	Kem Bond HS Metal	2.0-5.0	(50-125)
1-2 cts.	Hi-Solids Polyurethane	3.0-5.0	(75-125)
Steel: NEPCOAT			
1 ct.	Zinc Clad DOT	2.0-4.0	(50-100)
1 ct.	Steel Spec Epoxy Intermediate	3.0-6.0	(75-150)
1 ct.	Hi-Solids Polyurethane	3.0-5.0	(75-125)
Aluminum:			
1 ct.	DTM Wash Primer	0.7-1.3	(18-32)
1-2 cts.	Hi-Solids Polyurethane	3.0-5.0	(75-125)
Concrete:			
1 ct.	Kem Cati-Coat Epoxy HS Filler/Sealer	10.0-15.0	(250-375)
1-2 cts.	Hi-Solids Polyurethane	3.0-5.0	(75-125)
Galvanized Metal:			
1 ct.	Recoatable Epoxy Primer	4.0-6.0	(100-150)
1-2 cts.	Hi-Solids Polyurethane	3.0-5.0	(75-125)

FIRETEX ONLY:

Finish Coat for FIRETEX Hydrocarbon Systems:

1 ct. Hi-Solids Polyurethane*

*Consult FIRETEX PFP Specialist for recommended dft range

The systems listed above are representative of the product's use, other systems may be appropriate.

DISCLAIMER

The information and recommendations set forth in this Product Data Sheet are based upon tests conducted by or on behalf of The Sherwin-Williams Company. Such information and recommendations set forth herein are subject to change and pertain to the product offered at the time of publication. Consult your Sherwin-Williams representative to obtain the most recent Product Data Information and Application Bulletin.

SURFACE PREPARATION

Surface must be clean, dry, and in sound condition. Remove all oil, dust, grease, dirt, loose rust, and other foreign material to ensure adequate adhesion.

Refer to product Application Bulletin for detailed surface preparation information.

Minimum recommended surface preparation:

* Iron & Steel: SSPC-SP6/NACE 3, 2 mil (50 micron) profile
* Aluminum: SSPC-SP1
* Galvanizing: SSPC-SP1
* Concrete & Masonry: SSPC-SP13/NACE 6, or ICRI No. 310.2, CSP 1-3

* Primer Required

Surface Preparation Standards

Condition of Surface		ISO 8501-1 BS7079:A1	Swedish Std. SIS055900	SSPC	NACE
White Metal		Sa 3	Sa 3	SP 5	1
Near White Metal		Sa 2.5	Sa 2.5	SP 10	2
Commercial Blast		Sa 2	Sa 2	SP 6	3
Brush-Off Blast		Sa 1	Sa 1	SP 7	4
Hand Tool Cleaning	Rusted	C St 2	C St 2	SP 2	-
	Pitted & Rusted	D St 2	D St 2	SP 2	-
Power Tool Cleaning	Rusted	C St 3	C St 3	SP 3	-
	Pitted & Rusted	D St 3	D St 3	SP 3	-

TINTING

Tint with Maxitoner Colorants only into Part S. Extra White tints at 200% tint strength. Ultradeep tints at 150% tint strength. Five minutes minimum mixing on a mechanical shaker is required for complete mixing of color.

APPLICATION CONDITIONS

Temperature:	35°F (1.7°C) minimum 120°F (49°C) maximum (air, surface, and material) At least 5°F (2.8°C) above dew point
Relative humidity:	85% maximum

Refer to product Application Bulletin for detailed application information.

ORDERING INFORMATION

Packaging:

Part S:	1 gallon (3.78L) and 4 gallon (15.1L) kits
Part T:	quarts (0.94L) and gallons (3.78L)
Weight:	10.7 ± 0.2 lb/gal ; 1.28 Kg/L mixed, may vary with color

SAFETY PRECAUTIONS

Refer to the MSDS sheet before use.

Published technical data and instructions are subject to change without notice. Contact your Sherwin-Williams representative for additional technical data and instructions.

WARRANTY

The Sherwin-Williams Company warrants our products to be free of manufacturing defects in accord with applicable Sherwin-Williams quality control procedures. Liability for products proven defective, if any, is limited to replacement of the defective product or the refund of the purchase price paid for the defective product as determined by Sherwin-Williams. NO OTHER WARRANTY OR GUARANTEE OF ANY KIND IS MADE BY SHERWIN-WILLIAMS, EXPRESSED OR IMPLIED, STATUTORY, BY OPERATION OF LAW OR OTHERWISE, INCLUDING MERCHANTABILITY AND FITNESS FOR A PARTICULAR PURPOSE.

Protective & Marine Coatings

HI-SOLIDS POLYURETHANE

PART S	B65-300	GLOSS SERIES
PART S	B65-350	SEMI-GLOSS SERIES
PART S	B65WW305	MR, WHITE TINT BASE (GLOSS)
PART T	B60V30	HARDENER

Revised: June 5, 2013

APPLICATION BULLETIN

5.21

SURFACE PREPARATIONS

Surface must be clean, dry, and in sound condition. Remove all oil, dust, grease, dirt, loose rust, and other foreign material to ensure adequate adhesion.

Iron & Steel
Remove all oil and grease from surface by Solvent Cleaning per SSPC-SP1. Minimum surface preparation is Commercial Blast Cleaning per SSPC-SP6/NACE 3. For better performance, use Near White Metal Blast Cleaning per SSPC-SP10/NACE 2. Blast clean all surfaces using a sharp, angular abrasive for optimum surface profile (2 mils / 50 microns). Prime any bare steel the same day as it is cleaned or before flash rusting occurs.

Aluminum
Remove all oil, grease, dirt, oxide and other foreign material by Solvent Cleaning per SSPC-SP1. Primer required.

Galvanized Steel
Allow to weather a minimum of six months prior to coating. Remove all oil, grease, dirt, oxide and other foreign material by Solvent Cleaning per SSPC-SP1. When weathering is not possible, or the surface has been treated with chromates or silicates, first Solvent Clean per SSPC-SP1 and apply a test patch. Allow paint to dry at least one week before testing adhesion. If adhesion is poor, brush blasting per SSPC-SP7 is necessary to remove these treatments. Rusty galvanizing requires a minimum of Hand Tool Cleaning per SSPC-SP2, prime the area the same day as cleaned. Primer required.

Concrete and Masonry
For surface preparation, refer to SSPC-SP13/NACE 6, or ICRI No. 310.2, CSP 1-3. Surfaces should be thoroughly clean and dry. Concrete and mortar must be cured at least 28 days @ 75°F (24°C). Remove all loose mortar and foreign material. Surface must be free of laitance, concrete dust, dirt, form release agents, moisture curing membranes, loose cement and hardeners. Fill bug holes, air pockets and other voids with Steel-Seam FT910. Primer required.

Follow the standard methods listed below when applicable:
ASTM D4258 Standard Practice for Cleaning Concrete.
ASTM D4259 Standard Practice for Abrading Concrete.
ASTM D4260 Standard Practice for Etching Concrete.
ASTM F1869 Standard Test Method for Measuring Moisture Vapor Emission Rate of Concrete.
SSPC-SP 13/Nace 6 Surface Preparation of Concrete.
ICRI No. 310.2 Concrete Surface Preparation.

Surface Preparation Standards

	Condition of Surface	ISO 8501-1 BS7079:A1	Swedish Std. SIS055900	SSPC	NACE
White Metal		Sa 3	Sa 3	SP 5	1
Near White Metal		Sa 2.5	Sa 2.5	SP 10	2
Commercial Blast		Sa 2	Sa 2	SP 6	3
Brush-Off Blast		Sa 1	Sa 1	SP 7	4
Hand Tool Cleaning	Rusted	C St 2	C St 2	SP 2	-
	Pitted & Rusted	D St 2	D St 2	SP 2	-
Power Tool Cleaning	Rusted	C St 3	C St 3	SP 3	-
	Pitted & Rusted	D St 3	D St 3	SP 3	-

APPLICATION CONDITIONS

Temperature:	35°F (1.7°C) minimum 120°F (49°C) maximum (air, surface, and material) At least 5°F (2.8°C) above dew point
Relative humidity:	85% maximum

APPLICATION EQUIPMENT

The following is a guide. Changes in pressures and tip sizes may be needed for proper spray characteristics. Always purge spray equipment before use with listed reducer. Any reduction must be compliant with existing VOC regulations and compatible with the existing environmental and application conditions.

Reducer/Clean Up
Below 80°F (27°C) .....Reducer #69, R7K69 or R7K111
Above 80°F (27°C).....Reducer #58, R7K58 or R6K32

Airless Spray
Pressure.....2500 - 2800 psi
Hose.....3/8" ID
Tip .....013" - .017"
Filter .....none
Reduction.....As needed up to 10% by volume

Conventional Spray
Gun .....Binks 95
Fluid Nozzle .....63 B
Atomization Pressure ....50 - 70 psi
Fluid Pressure.....20 - 25 psi
Reduction.....As needed up to 15% by volume

Brush
Brush.....Natural bristle
Reduction.....As needed up to 15% by volume

Roller
Cover .....3/8" woven with solvent resistant core
Reduction.....As needed up to 15% by volume

If specific application equipment is not listed above, equivalent equipment may be substituted.

continued on back

Protective & Marine Coatings

HI-SOLIDS POLYURETHANE

PART S	B65-300	GLOSS SERIES
PART S	B65-350	SEMI-GLOSS SERIES
PART S	B65WW305	MR, WHITE TINT BASE (GLOSS)
PART T	B60V30	HARDENER

APPLICATION BULLETIN

5.21

APPLICATION PROCEDURES

Surface preparation must be completed as indicated.

Mix contents of each component thoroughly with low speed power agitation. Make certain no pigment remains on the bottom of the can. Then combine 4 parts by volume of Part S with 1 part by volume of Part T. Thoroughly agitate the mixture with power agitation.

If reducer solvent is used, add only after both components have been thoroughly mixed.

Apply paint at the recommended film thickness and spreading rate as indicated below:

Recommended Spreading Rate per coat:

	Minimum	Maximum
Wet mils (microns)	**4.5** (112)	**8.0** (200)
Dry mils (microns)	**3.0** (75)	**5.0** (125)
~Coverage sq ft/gal (m^2/L)	**208** (5.1)	**347** (8.5)
Theoretical coverage sq ft/gal (m^2/L) @ 1 mil / 25 microns dft	**1040** (25.5)	

NOTE: Brush or roll application may require multiple coats to achieve maximum film thickness and uniformity of appearance.

Drying Schedule @ 4.5 mils wet (112 microns):

	@ 40°F/4.5°C	@ 77°F/25°C *50% RH*	@ 120°F/49°C
To touch:	4 hours	2 hours	1 hour
To handle:	16 hours	8 hours	5 hours
To recoat:			
minimum	24 hours	18 hours	10 hours
maximum	14 days	14 days	14 days
To cure:	14 days	10 days	7 days
Pot Life:	8 hours	4 hours	2 hours
Sweat-in-Time:		None required	

If maximum recoat time is exceeded, abrade surface before recoating. Drying time is temperature, humidity, and film thickness dependent.

Application of coating above maximum or below minimum recommended spreading rate may adversely affect coating performance.

CLEAN UP INSTRUCTIONS

Clean spills and spatters immediately with Reducer #58, R7K58. Clean tools immediately after use with Reducer #58, R7K58. Follow manufacturer's safety recommendations when using any solvent.

DISCLAIMER

The information and recommendations set forth in this Product Data Sheet are based upon tests conducted by or on behalf of The Sherwin-Williams Company. Such information and recommendations set forth herein are subject to change and pertain to the product offered at the time of publication. Consult your Sherwin-Williams representative to obtain the most recent Product Data Information and Application Bulletin.

PERFORMANCE TIPS

Stripe coat all crevices, welds, and sharp angles to prevent early failure in these areas.

When using spray application, use a 50% overlap with each pass of the gun to avoid holidays, bare areas, and pinholes. If necessary, cross spray at a right angle.

Spreading rates are calculated on volume solids and do not include an application loss factor due to surface profile, roughness or porosity of the surface, skill and technique of the applicator, method of application, various surface irregularities, material lost during mixing, spillage, overthinning, climatic conditions, and excessive film build.

Excessive reduction of material can affect film build, appearance, and adhesion.

Do not apply the material beyond recommended pot life.

Do not mix previously catalyzed material with new.

In order to avoid blockage of spray equipment, clean equipment before use or before periods of extended downtime with Reducer #58, R7K58.

Mixed coating is sensitive to water. Use water traps in all air lines. Moisture contact can reduce pot life and affect gloss and color.

Quick-Thane Urethane Accelerator is acceptable for use. See data page 5.97 for details.

E-Z Roll Urethane Defoamer is acceptable for use. See data page 5.99 for details.

Refer to Product Information sheet for additional performance characteristics and properties.

SAFETY PRECAUTIONS

Refer to the MSDS sheet before use.

Published technical data and instructions are subject to change without notice. Contact your Sherwin-Williams representative for additional technical data and instructions.

WARRANTY

The Sherwin-Williams Company warrants our products to be free of manufacturing defects in accord with applicable Sherwin-Williams quality control procedures. Liability for products proven defective, if any, is limited to replacement of the defective product or the refund of the purchase price paid for the defective product as determined by Sherwin-Williams. NO OTHER WARRANTY OR GUARANTEE OF ANY KIND IS MADE BY SHERWIN-WILLIAMS, EXPRESSED OR IMPLIED, STATUTORY, BY OPERATION OF LAW OR OTHERWISE, INCLUDING MERCHANTABILITY AND FITNESS FOR A PARTICULAR PURPOSE.

Building or Structure	Item or Face to be painted	Painting System	Color	Columbia No.
		No. 2	Tan	
	Piping Supports	~~No. 4~~	~~Clear~~	SW4003
	Misc. Struct. Steel, hangers Hoist	No. 2	Lt. Gray	~~2285A~~ SW4027
	Exterior Metals, mechanical (where not prefinished)	No. 2	Brown ~~2285A~~	SW4001
	Plant Piping	No. 1, 3, 6		

FIRE Hyd. BOLLARDS SAFETY YELLOW BL65Y550 w/ gray PRIMER

3.20 Piping Colors

Raw Water	Olive Green (Stock)
Finish/Domestic	Blue (Stock)
Drain Lines	Green (Stock)
Feed	Orange (Stock)
All other lines	Light Gray (Stock)
Sludge	Match existing

Electrical conduit will be painted aluminum or to match adjacent ceiling or wall surfaces as directed by the Engineer. Vent lines will be painted to match surfaces they adjoin.

Valve hand wheels and levers are to be a red color.

3.21 Colors

NOTE

Colors on the above schedule are representative of Columbia Paint Co., other brands mentioned in Section 2 are acceptable. Contractor will submit color samples to the Engineer for approval of all paints to be used stating where each is to be applied, a minimum of 15 days before actual application is to commence.

3.22 Repairing Damaged Paint On Equipment

Painted surfaces of equipment which have become damaged prior to acceptance by the Owner will be repainted with the same or equivalent paint used in the original application.

3.23 Protection of Surfaces

Throughout the work the Contractor will use drop cloths, masking tapes, and other suitable measures to protect all surfaces from accidental spraying, spattering, or spilling of paint. The

Surfaces Not to be Painted

Except as otherwise required or directed, the following surfaces are not to be painted:

Submerged concrete walls adjacent to soil backfill

Exposed aluminum surfaces, except ductwork

Polished or finished stainless steel

Unfinished stainless steel will be painted

Nickel or chromium

Rubber and plastics, including fiber glass reinforced plastics

Exterior of brick (covered under Section 07175)

Floor drain (PVC) Pipe and

Surfaces specified to be factory finished.

3.19 Detailed Painting Schedule

The following schedule calls out areas to receive the finished listed. Painting application systems specified refer to those designations defined in subsection preceding.

Building or Structure	Item or Face to be painted	Painting System	Color	Columbia No.
Wellhouse building	Interior concrete block, conduit.	No. 5	Eggshell	~~2376W~~ SW4036
	Steel doors and frames	No. 2	match metal roofing YES!!	
	Electrical Cabinets	No. 2	Tan	~~2393M~~ SW4003
	(Exception: NEMA 4X enclosures, stainless steel)			
	Exterior & All Misc. Metals	No. 2	Tan	~~2393M~~ SW4003
	Concrete Floor	No. 4	Clear	

Sat # Hem. Hemlock Green # Firestone Building Products

Ralph McGillivray

From: Ralph McGillivray <ralphm@nciengineering.com>
Sent: Tuesday, December 02, 2014 10:03 AM
To: 'Scott Karaffa'
Subject: FW: Sand Coulee - TNEMEC

how to recoat factory primer factory primer

-----Original Message-----
From: Ralph McGillivray [mailto:ralphm@nciengineering.com]
Sent: Monday, December 01, 2014 6:48 AM
To: 'Scott Karaffa'; 'barry@bolandconstruction.net'
Cc: Jake NCI; Idaho NCI; 'Krista Hanson'; 'Quammen, Tom'
Subject: FW: Sand Coulee - TNEMEC

Scott,
Tom provides us a means to utilize your currently primed DIP pipe. The 3 coats will be necessary. Still also looking for the remaining paint submittal.

and fusion bonded epoxy

Thanks
Ralph McGillivray
NCI Engineering
406 453 5478

-----Original Message-----
From: Quammen, Tom [mailto:tquammen@tnemec.com]
Sent: Wednesday, November 26, 2014 9:44 AM
To: Ralph McGillivray
Subject: RE: Sand Coulee - TNEMEC

Preprimed DIP

Thank you Ralph for your patience and also to the fella's at Sand Coulee.

In short - if any of this piping is in immersion service or intermittent immersion - then the use of polyurethane enamel is not advised. Assuming it is not.....

The N140 or V140 as a substitute for the zinc-rich primer is allowable (you lose some anti-corrosive properties as the zinc acts like cold galvanizng) but assuming the items are non-immersion and either interior or exterior exposed - the use of two add'l topcoats of polyurethane enamel (3 coats system) will yield a sufficient thickness (6.0+ mils) and is proven effective and common in typical water/wastewater applications.

Overcoating FBE (fusion bonded epoxy) here again assuming non-immersion service is also allowable, provided the aged FBE is scarified before topcoating. Typically with 100+ grit sandpaper, in a cross-hatch pattern and remove fines. Followed by 2 coats of polyurethane enamel, thinned as recommended will yield sufficient thickness.

I hope I've been worth the trouble and thanks again for your patience.

Happy Thanksgiving,

pre fusion bonded Valves

400W NT™ 100* Urethane Enhanced White Primer Bonder /Sealer

[400W NT 100 White Meets 100 g/l VOC Rule Limits]

Applications:

- Aluminum
- Steel, Iron } Refer to Product Use Section
- Non-Ferrous Metals
  - Chrome, Tin, Copper
  - Brass, etc.
- Tile
- Porcelain
- Glazed Block
- Formica
  - Cabinets, Paneling
  - Doors, Trim
- PVC Shutters
- PVC Clad Windows, etc.
- Fiberglass
  - i.e. Garage Doors
- Glass
- Old Glossy Paint
- Wood
- Plywood
- Hardboard, Wallboard

Features and Benefits:

- Quick Dry
- Ready to Apply – No Thinning
- Interior / Exterior
- White Color
- Helps Bond Paint
- Primes and Seals
- Helps Prevent Flaking, Blistering, Peeling
- Top Coats All

See us on the Web at www.ximbonder.com

Technical Service Information
(800) 262-8469

Product Description: 400W NT 100 represents an advancement in the XIM 400W Bonding Primer Technology. It is less than 100 g/l VOC, which meets all primer VOC rule limits. It is also Urethane Enhanced for greater adhesion and recoatability. It is an ultra-premium solvent based primer / sealer / bonder developed to solve many painting problems. It provides excellent adhesion, sealing and bonding on many hard-to-coat surfaces. Most clean and dull, paintable surfaces may not need sanding, but sanding or dulling the surface is required on hard, glossy surfaces for maximum adhesion. 400W NT 100 White can be used for both indoor or outdoor applications and can be used with all topcoats.

* NT = New Technology

Product No. 1162

	400W 490 g/l	400W ES 100 g/l	400W NT 200 g/l	400W NT Urethane Enhanced 100 g/l
VOC Rule Restrictions	Not in CA, OTC and LADCO States	For CA Only	For OTC and LADCO States	All USA and Canada
Regular Surfaces	✓	✓	✓	✓
Tile	✓	✓	✓	✓
Glass	✓	✓	✓	✓
Formica	✓	✓	✓	✓
Silicone Polyester Siding	No	No	No	✓
Kynar Siding	No	No	No	✓
Chalky Surfaces	No	No	No	✓
Topcoats	LIMITED	LIMITED	LIMITED	All

Product Use: 400W NT 100 White is an ideal prime coat for Wood, Hardboard, Plaster, Glass, Tile, Fiberglass, some Plastics. 400W NT 100 White can be used for both indoor or outdoor applications and can be used with all topcoats. Like XIM's Urethane Modified Acrylic (UMA_{brand}®) 400W NT 100 with its Urethane Enhancement and unique formulation will bond to Kynar and Silicone Polyester factory-coated siding. When priming Kynar or Silicone Polyester siding, at least two test patches in different areas is a must to demonstrate adhesion that is acceptable to you. It can also bond to moderately chalky surfaces. Heavy chalk should be removed to ensure good adhesion. Again, test for adhesion that is acceptable to you. Because there are many types of surfaces, plastics and composite materials always test a small area first for adhesion and topcoat compatibility. **Do not use 400W NT 100 White for tubs, sinks or showers where hot, soapy or continuous water contact occurs.** If extra corrosion protection is needed when coating iron or steel, XIM 360 NT 100 Rust Inhibiting Primer is recommended. On extremely porous surfaces or severe staining types of wood a second coat of XIM 400W NT 100 White may be needed prior to application of the finish coat(s). Also consider XIM Restorz™, which is in the Specialty Primer VOC Category for Stain Control, Fire and Smoke sealing. **Not recommended and do not use for priming 100% silicone caulks or silicone rubber seams.** If you have a question about the suitability of 400W NT 100 for other surfaces, contact our XIM Technical Service Staff.

Packaging Data:	400W NT 100 URETHANE ENHANCED White #1162	
1162-1	Gallons	- 4 per carton
1162-2	Quart	- 6 per carton
1162-5	Aerosol	- 12 per carton
1162-6	Pail	- 5 gallon capacity

Product Preparation: 400W NT 100 White is ready to use directly from the can. No thinning required. Do not add extra solvent. If tinting is desired, use universal tinting colors not to exceed two (2) ounces per each gallon. 400W NT 100 White is a thin product and can settle. **Note: A dark, solvent layer can form at the surface during storage. This will mix in easily.** Shake or mix well before using.

Product Storage: 400W NT100 White - Two years at temperatures not to exceed 120°F.

Surface Preparation: Be sure the surface is clean and dry, free from dust, grease, wax, oil, loose paint, dirt and other surface contaminants. Clean with a strong, abrasive detergent and rinse completely. For very hard, glossy surfaces, dulling the surface with a carbide sandpaper before applying the 400W NT 100 White is necessary for the best adhesion. Solvent wiping the surface with XIM GON™ solvent cleaner, XIM GON_20™ water based cleaner or xylene is also recommended. Do not use mineral spirits, turpentine or any oily cleaning solvent.

XIM . . . When Ordinary Primers Are Not Enough

400W NT 100 Urethane Enhanced White Primer / Sealer and Bonder

How to Apply: Use brush, roller or spray. Use a natural bristle brush or a short nap roller (1/4 inch nap). Not recommended for use with foam brushes or foam rollers covers. Don't overload the applicator. Use light pressure when applying to reduce drips and spatter. Thin film application desired. Excellent open-time. When spraying, apply a light, but wet mist coat followed by a second light to medium coat. Thin film application is desired. Air and surface temperature should be between 50°F and 90°F. 400W NT White will dry to touch very quickly (20 to 30 min). Work in small areas and apply evenly. 400W NT 100 White can be top-coated in 2 to 3 hours. Thicker films can remain tacky for about 24 hours but will generally harden after 48-72 hours. Full cure in about 7 days. (Will depend on temperature and film thickness) It can be top coated with all topcoats, including latex, oil alkyds, urethanes, epoxies. For Aerosols, Lacquers and strong solvent topcoats Always Test First. One gallon will cover approximately 650 square feet of non-porous surface at 1 mil dry film thickness. **Do not prime flexible seams or caulks; they may cause cracking or loss of adhesion when coated with 400W NT 100 White. Plan your job in advance and always caulk seams or edges after painting.**

Spraying:

	Tip Size	Pressure	Equipment Mfg.
Airless Spray	0.011 to 0.015	Less than 1500 PSI	All Mfg.
HVLP Spray	9 Cap	8 PSI	Spraytech, Accuspray, Graco, etc.

Spray Gun Usage: When applying with spray gun equipment, vapors can build up rapidly and may cause flash fire. With all applications: vapors may travel to areas away from work site and ignite; use only where moving air will carry vapors outside.

Clean Up: XIM GON™ Cleaner or xylene.

WARNING: If you scrape, sand or remove old paint from any surface, you may release lead dust. LEAD IS TOXIC. EXPOSURE TO LEAD DUST CAN CAUSE SERIOUS ILLNESS, SUCH AS BRAIN DAMAGE, ESPECIALLY IN CHILDREN. PREGNANT WOMEN SHOULD ALSO AVOID EXPOSURE. Wear a NIOSH-approved respirator to control lead exposure. Carefully clean up with a wet mop or HEPA vacuum. Before you start, find out how to protect yourself and your family by contacting the U.S. EPA/Lead Information Hotline at 1-800-424-LEAD (5323) or log on to www.epa.gov/lead.

Physical/Chemical Data:	**XIM 400W NT 100 Urethane EnhancedWhite Bonder #1162**
Weight per Gallon:	9.9 lb/gallon
Non-volatile:	591 % by weight & 39.5% by volume :
Viscosity (#2 Zahn Cup):	20 ± 4 seconds
Spreading rate (@ 1.00 mils DFT):	650 Square Feet per Gallon
Application Conditions:	50°F to 90°F (Mix before U se)
Drying Schedule: (ASTM D1640) @ 77°F and 50% RH	to touch: Generally 20-30 min. Can be up to 24 hours depending on temperature and film thickness to top coat: 2-3 hours Full Cure: Generally 7-14 days
Flash Point (ASTM 3278-82):	0°F
VOC:	Less than 100 g/l, 0.84 lb/gal.
Recommended Film Thickness:	1.75 to 3.0 mils wet or 0.75 to 1.25 mil dry
Flexibility (ASTM D522 - cold rolled steel at 1 mil dry):	Excellent
Cross Hatch Adhesion (ASTM D3359, Method B at 1 mil dry):	No loss
Impact Resistance (ASTM D2794 - 100 in. lbs. at 1 mil dry) :	Pass
Temperature stability of cured film:	Up to 250°F Intermittently
Gloss (60 deg, glossmeter):	Less than 10
Top Coats	All Topcoats Recommended (For Lacquers and Aerosol Cans - Always Test First)

CONTAINS: Acetone, Methyl Ethyl Ketone, Petroleum Distillates, Crystalline Silica
Vapor harmful. May affect the brain or nervous system causing dizziness, headache or nausea. Causes eye, nose, throat, lung and skin irritation. Harmful if swallowed. **NOTICE:** Reports have associated repeated and prolonged occupational overexposure to solvents with permanent brain and nervous system damage. Intentional misuse by deliberately concentrating and inhaling contents may be harmful or fatal.
Keep away from heat, sparks and flame. Vapors may cause flash fire. Do not smoke. Extinguish all flames and pilot lights, and turn off stoves, heaters, electric motors and other sources of ignition during use and until all vapors are gone. Prevent build up of vapors by opening windows and doors to achieve cross-ventilation. **Use only with adequate ventilation.** Do not breathe vapor or spray mist. Ensure fresh air entry during application and drying. If you experience eye watering, headache or dizziness or if air monitoring demonstrates vapor, mist or particulate levels are above applicable limits, wear an appropriate, properly fitted respirator effective for organic vapor/particulate (NIOSH approved) during and after application. Follow the respirator manufacturer's directions for respirator use. Avoid contact with eyes, skin and clothing. Wear safety glasses or goggles. Wash thoroughly after handling. Close container after each use. **CRYSTALLINE SILICA: DELAYED EFFECTS FROM LONG TERM EXPOSURE.** Abrading or sanding of the dry film may release crystalline silica which has been shown to cause lung damage and cancer under long term exposure.
FIRST AID: If swallowed, do not induce vomiting. Call a physician immediately. During application, if you experience difficulty in breathing, leave the area to obtain fresh air. If continued difficulty is experienced, get medical assistance immediately. In case of eye contact, flush with plenty of water for at least 15 minutes and get medical attention immediately; for skin, wash thoroughly with soap and water.
KEEP OUT OF REACH OF CHILDREN DO NOT TAKE INTERNALLY

If spilled, contain spilled material and remove with inert absorbent. Dispose of contaminated absorbent, container and unused contents in accordance with local, state and federal regulations. See this product's Material Safety Data Sheet (MSDS) for additional information.

Limited Warranty: This product is made to the highest standards in order to provide you with consistently optimum results. If this product fails to perform as specified herein, XIM will furnish an equivalent amount of replacement product, or will refund the purchase price upon proof of purchase. XIM will not be liable for any indirect or consequential damages. This warranty does not include labor or the cost of labor for the application or removal of any paint or primer. There are thus no warranties of fitness or merchantability beyond that provided above. This warranty gives you specific legal rights which may vary from state to state.

XIM Products, Inc., 1169 Bassett Road, Westlake, Ohio 44145 (800) 262-8469
WWW.XIMBONDER.COM

1/4/2012

Submittal Review Response

Project: Sand Coulee Water System Replacement

General Contractor: Boland Construction

Contractor's P M: Barry Boland

Response to Transmittal No: #28 (Resubmitted on 4/22/2015)

Product Description: Colors, Product Information, Miscellaneous Data for Extras

Supplier or Subcontractor: Sherwin Williams Paints

Date Received: _____

Date Returned: _____

NCI Reviewer: _____

Distribution: ( ) Contractor ( ) Engineer ( ) Owner

General Comments

1. Corrections or comments made on Contractor's Shop Drawings during this review do not relieve the Contractor from compliance with Contract Drawings and Specifications. This submittal has been reviewed, by the Engineer, for conformance with the design concept and general compliance with the Contract Documents only.
2. Contractor is responsible for confirming and correlating all quantities and dimensions; power and other utility requirements; transportation, delivery and scheduling; fabrication processes and techniques; coordinating work with other trades; and satisfactory and safe performance of the work.
3. Contractor is responsible for coordination between all subcontractors and suppliers which may be directly or indirectly involved with this submittal.
4. Contractor's signature, stamp or initials on any page or portion of this submittal is Contractor's certification that he has reviewed the submitted material for conformance with the means, methods, techniques, sequences and operation of construction; and safety precautions and programs incidental thereto, all being the sole responsibility of the Contractor; and is the Contractor's certification that, unless so indicated on the submittal cover page or transmittal, nothing indicated by the information contained in the submittal comprises a deviation from the requirements of the Contract Documents.
5. Contractor is responsible for any and all cost impacts, including costs incurred by the Owner or Engineer, resulting from the submittal and/or Engineer's approval of any substituted material or concept.

Engineer's Response and Required Contractor Action

( ) **No Exceptions Noted -** No further action is required on the part of the Contractor with respect to the submittal process.

( ) **Not Approved -** The product, equipment, material or concept submitted cannot be modified to comply with the requirements of the Contract Documents. Submit data for different product, equipment, material or concept that complies with the requirements.

( ) **Approved as Corrected -** Provide written acknowledgement that the indicated corrections are understood and will be implemented.

( ) **Revise and Resubmit -** Implement the indicated revisions and forward the revised submittal to Engineer for review.

Cretex
Concrete Products
West, Inc.

www.cretexwest.com

Project SAND COULEE WATER

Job No. 461 Date APRIL-15

CONCRETE PIPE
Your best value over time.

SHERWIN-WILLIAMS - KEVIN

#	COLOR	AREA	S/F	# COATS	APPT. PAINT	ITEM
—	CLEAR	CONC. FLOOR	455	2 1-ACID ETCH	2 KITS 1 gals 1-SAND	PAINT ADDITIVE (SAND)
—	WHITE IVORY	WALLS	1300	1	3-5gals	BLOCK FILLER
40316	EGGSHELL	WALLS	1300	2	8 gals.	EPOXY ESTER ENAMEL
MATCH	HEMLOCK GREEN	DOORS/FRAMES	230	2	5 gals	ALSO ELECT. BOXES
4064	BLUE	PIPING (H2O)	25	2	1 gals.	PIPE SURFACES W/ FACTORY COATING
4023	TAN	PIPE SUPPORTS	4	2	1 gals	IN MH's TOP BOTTOM
B54Y67	SAFETY YELLOW	BOLLARDS ETC.	POSTS 81 RAILS 45 (126)	2	2 gals.	FIRE HYDRANT LOCATIONS

METAL PRIMER 3 gals

KEVIN

APPT. OF ACID ETCH - FLOOR ✓
APPT. OF MACROPOXY - FLOOR ✓
APPT. OF SAND ADDITIVE - FLOOR ✓

SHERWIN WILLIAMS.

SCHEDULE

System # 1

Steel / Exposed Metal-Mildly Corrosive

Primer: B50AZ0006 - Kem Kromik® Universal Metal Primer Gray Gray

Prime raw steel with 1 coat of Kem Kromic Primer.

Finish: B54W00151 - Pro Industrial Urethane Alkyd Enamel Extra White or colors

Pre-primed metal (FBE) needs to be scarified with 100 grit sand paper, removing the sanding fines. Then apply 2 coats of finish. See System # 1 A, For two part systems.

System #2

Metal Trim, structural steel, copper tubing, Electrical Pannels.

Primer: B50AZ0006 - Kem Kromik® Universal Metal Primer Gray Gray

Apply 1 coat of primer.

Finish: B54W00151 - Pro Industrial Urethane Alkyd Enamel Extra White or colors

Pre-primed metal needs to be scarified with 100 grit sand paper, removing the sanding fines. Then apply 2 coats of finish.

System #3

Galvanized and Plain Steel Metal

Primer: B71Y00001 - DTM Wash Primer Yellow-Green Yellow-Green

Direct to Metal Wash primer 1 coat.

Finish: B58W00610 - Macropoxy® 646 Fast Cure Epoxy Part A Mill White or colored

2 coats @ 8 mils per coat DFT

System #4

Concrete/Cement Floors

Primer: B58W00610 - Macropoxy® 646 Fast Cure Epoxy Part A Mill White or colored ? Clear Add Sand To 2ND Coat MIXED ?

Apply 2 coats @ 8 mils DFT per coat.

System #5

Masonry Interior

Primer: B25W00025 - PrepRite® Interior/Exterior Latex Block Filler White ? HEAVY DUTY B42W46

Apply 1 coat of Block Filler.

Finish: K46W00151 - Pro Industrial PreCatalyzed Waterbased Semi-Gloss Epoxy Extra White

Scott Karolla

NOTE!

B54Y157 - Safety Yellow

PRO INDUSTRIAL™

113.11

URETHANE ALKYD ENAMEL

B54-150 SERIES

As of 03/01/2013, Complies with:			
OTC	Yes	LEED® 09 CI	No
SCAQMD	No	LEED® 09 NC	No
CARB	No	LEED® 09 CS	No
CARB SCM 2007	No	LEED® 09 S	No
MPI Spec #	No	NGBS	No

CHARACTERISTICS

Pro Industrial Urethane Alkyd Enamel is a high solids, high gloss coating intended for interior/exterior use in industrial environments. It is easy to brush, roll or spray. Provides performance comparable to silicone alkyds.

- Modified with urethane resin for increased exterior durability
- Resistant to chipping and flaking
- Resists premature yellowing
- Abrasion resistant
- Appropriate for interior and exterior applications
- Very good gloss and color retention
- Excellent application characteristics
- Suitable for use in USDA inspected facilities

Color: Most Colors

Recommended Spread Rate per coat:

Wet mils:	3.5 - 7.0
Dry mils:	2.0 - 4.0
Coverage:	231 - 462 sq ft/gal approximate

Note: Brush or roll application may require multiple coats to achieve maximum film thickness and uniformity of appearance.

Drying Time @ 4.0 mils wet 50% RH:

	45°F	77°F	120°F
To touch:	4 hrs	2½ hrs	30 min
Tack free:	10 hrs	4 hrs	2 hrs
To recoat:	36 hrs	18 hrs	8 hrs
To cure:	7 days	7 days	5 days

Drying time is temperature, humidity, and film thickness dependent.

Finish: Gloss

Flash Point: 103°F, PMCC

Shelf Life: 36 months, unopened

Store indoors at 40°F to 100°F.

Tinting with Blend-A-Color or MaxiToner:

Base	oz/gal	Strength
Extra White	0-6	100%
Ultradeep	4-12	100%

B54W00151 (may vary by color)

VOC (EPA Method 24): Unreduced: <330g/L; <2.75 lb/gal

Volume Solids: 58% ± 2%

Weight Solids: 72% ± 2%

Weight per Gallon: 9.8 lb

RECOMMENDED SYSTEMS

Steel (alkyd primer):
1 ct. Kem Bond HS Primer
1-2 cts. Pro Industrial Urethane Alkyd Enamel

Aluminum:
1 ct. DTM Wash Primer
1-2 cts. Pro Industrial Urethane Alkyd Enamel

Galvanized Metal:
1 ct. Galvite HS
1-2 cts. Pro Industrial Urethane Alkyd Enamel

Concrete Block:
1 ct. Heavy Duty Block Filler
1-2 cts Pro Industrial Urethane Alkyd Enamel

Interior Plaster and Poured Concrete:
1 ct. Loxon Masonry Primer
1-2 cts. Pro Industrial Urethane Alkyd Enamel

Drywall:
1 ct. ProMar 200 Latex Primer
1-2 cts. Pro Industrial Urethane Alkyd Enamel

Wood Floors (Foot Traffic):
1-2 cts. Pro Industrial Urethane Alkyd Enamel

System Tested: (unless otherwise indicated)
Substrate: Steel
Surface Preparation: SSPC-SP10
1 ct. Kem Bond HS Primer
1 ct. Pro Industrial Urethane Alkyd Enamel

Abrasion
Method: ASTM D4060, C517 wheel, 1000 cycles,1 kg load
Result: 175 mg loss

Adhesion
Method: ASTM D4541
Result: 392 psi

Direct Impact Resistance
Method: ASTM D2794
Result: 60 in. lbs.

Dry Heat Resistance
Method: ASTM D2485
Result: 200°F (93°C) (discolors)

Flexibility
Method: ASTM D522, 180° bend, 1/4" mandrel
Result: Passes

Humidity Resistance
Method: ASTM D4548, 500 hours
Result: Rating 10 per ASTM D610 for Rusting; Rating 10 per ASTM D714 for Blistering

Pencil Hardness
Method: ASTM D3363
Result: B

Salt Fog Resistance
Method: ASTM B117, 500 hours
Result: Rating 10 per ASTM D610 for Rusting; Rating 10 per ASTM D714 for Blistering

continued on back

Protective & Marine Coatings

HEAVY DUTY BLOCK FILLER

B42W46

Revised 5/12

PRODUCT INFORMATION

1.01

PRODUCT DESCRIPTION

HEAVY DUTY BLOCK FILLER is an acrylic resin block filler for use on interior and exterior poured and precast concrete, concrete block, and cinder block.

- Excellent moisture resistance
- Excellent filling characteristics
- Suitable for use in USDA inspected facilities
- Resurface spalled and deteriorated concrete walls and ceilings
- Low odor, low VOC

PRODUCT CHARACTERISTICS

Finish:	Flat
Color:	White
Volume Solids:	53% ± 2%
Weight Solids:	73% ± 2%
VOC (EPA Method 24):	<50 g/L; 0.42 lb/gal

Recommended Spreading Rate per coat:
(varies with application, surface irregularities, and degree of sealing and filling desired.)

	Minimum	Maximum
Wet mils (microns)	**18.0** (450)	**34.0** (850)
Dry mils (microns)	**10.0** (250)	**18.0** (450)
~Coverage sq ft/gal (m^2/L)	**50** (1.2)	**88** (8.2)
Theoretical coverage sq ft/gal (m^2/L) @ 1 mil / 25 microns dft	**848** (21)	

NOTE: Brush or roll application may require multiple coats to achieve maximum film thickness and uniformity of appearance.

Drying Schedule @ 18.0 mils wet (450 microns):

	@ 55°F/13°C	@ 77°F/25°C *50% RH*	@ 95°F/35°C
To touch:	1.5 hours	1 hour	30 minutes
To handle:	8 hours	6 hours	1 hour
To recoat:			
itself	3 hours	1 hour	30 minutes
water borne	48 hours	18 hours	6 hours
solvent borne	48 hours	48 hours	24 hours
To cure:	30 days	30 days	10 days

Drying time is temperature, humidity, and film thickness dependent.

Shelf Life:	36 months, unopened Store indoors at 40°F (4.5°C) to 100°F (38°C)
Flash Point:	>200°F (>93°C), PMCC
Reducer/Clean Up:	Water

RECOMMENDED USES

For use over prepared masonry surfaces in:

- Dairies
- Mining Industry
- Chemical Plants
- Hospitals
- Schools
- Bottling Plants
- Tunnels
- Paper Mills
- Jails
- Power Plants
- Equipment Foundations
- Water and Sewage Treatment Facilities
- Industrial concrete ceilings and walls
- Petroleum Refineries
- Acceptable for use in high performance architectural applications

PERFORMANCE CHARACTERISTICS

Substrate*: Concrete
Surface Preparation*: SSPC-SP3
System Tested*:
1 ct. Heavy Duty Block Filler @ 10 mils dft/ct
*unless otherwise noted below

Test Name	Test Method	Results
Adhesion	ASTM D4541	200 psi
Direct Impact	ASTM D2794	6 in. lbs.
Dry Heat Resistance	ASTM D2485	200°F (93°C)
Flexibility (cold rolled steel)	ASTM D522, 180° bend, 1" mandrel	Passes
Moisture Resistance	TT-C-555B	No failure
Pencil Hardness	ASTM D3363	5B
Thermal Shock	ASTM D2246 (5 cycles)	Excellent
Winder Driven Rain Resistance	TT-C-555b	Passes
Wet Heat Resistance	Non-immersion	120°F (49°C)

Provides performance comparable to products formulated to federal specification: TT-F-1098D Type 1

continued on back

Protective & Marine Coatings

HEAVY DUTY BLOCK FILLER

B42W46

PRODUCT INFORMATION

1.01

RECOMMENDED SYSTEMS

		Dry Film Thickness / ct. Mils	(Microns)
Untopcoated, light service			
Interior:			
1 ct.	Heavy Duty Block Filler	10.0-18.0	(250-450)
Exterior:			
2 cts.	Heavy Duty Block Filler	10.0-18.0	(250-450)
Acrylic Finishes:			
1 ct.	Heavy Duty Block Filler	10.0-18.0	(250-450)
2 cts.	DTM Acrylic Coating	2.5-4.0	(63-100)
or	Metalatex Semi-Gloss Coating	0.5-4.0	(13-100)
or	Sher-Cryl HPA	2.5-4.0	(62.5-100)
Alkyd Finishes:			
1 ct.	Heavy Duty Block Filler	10.0-18.0	(250-450)
2 cts.	Industrial Enamel HS	2.0-4.0	(63-100)
or	Metalastic DTM	3.0-5.0	(75-125)
or	Waterbased Industrial Enamel	1.5-3.0	(38-75)
Catalyzed Epoxy, Solvent based:			
1 ct.	Heavy Duty Block Filler	10.0-18.0	(250-450)
2 cts.	Tile-Clad HS Epoxy	2.5-4.0	(63-100)
or	Macropoxy 646	5.0-10.0	(125-250)
Catalyzed Epoxy, Water based:			
1 ct.	Heavy Duty Block Filler	10.0-18.0	(250-450)
2 cts.	Water Based Catalyzed Epoxy	2.5-4.0	(63-100)
or	Waterbased Tile Clad Epoxy	2.0-4.0	(63-100)
or	Pro Industrial HB Epoxy	4.0-6.0	(100-150)
Polyurethane:			
1 ct.	Heavy Duty Block Filler	10.0-18.0	(250-450)
1 ct.	Macropoxy 646	5.0-10.0	(125-250)
2 cts.	Hi-Solids Polyurethane	3.0-4.0	(75-100)
or	Sherthane 2K Urethane	2.0-4.0	(63-100)
or	Acrolon 218 HS Polyurethane	3.0-6.0	(75-150)

The systems listed above are representative of the product's use, other systems may be appropriate.

DISCLAIMER

The information and recommendations set forth in this Product Data Sheet are based upon tests conducted by or on behalf of The Sherwin-Williams Company. Such information and recommendations set forth herein are subject to change and pertain to the product offered at the time of publication. Consult your Sherwin-Williams representative to obtain the most recent Product Data Information and Application Bulletin.

SURFACE PREPARATION

Surface must be clean, dry, and in sound condition. Remove all oil, dust, grease, dirt, loose rust, and other foreign material to ensure adequate adhesion.

Refer to product Application Bulletin for detailed surface preparation information.

Minimum recommended surface preparation:
Concrete & Masonry: SSPC-SP13/NACE 6,or ICRI No. 310.2, CSP 1-3

Surface Preparation Standards

	Condition of Surface	ISO 8501-1 BS7079:A1	Swedish Std. SIS055900	SSPC	NACE
White Metal		Sa 3	Sa 3	SP 5	1
Near White Metal		Sa 2.5	Sa 2.5	SP 10	2
Commercial Blast		Sa 2	Sa 2	SP 6	3
Brush-Off Blast		Sa 1	Sa 1	SP 7	4
Hand Tool Cleaning	Rusted	C St 2	C St 2	SP 2	-
	Pitted & Rusted	D St 2	D St 2	SP 2	-
Power Tool Cleaning	Rusted	C St 3	C St 3	SP 3	-
	Pitted & Rusted	D St 3	D St 3	SP 3	-

TINTING

Do not tint.

To provide color as a guide coat, or when color is required for exterior exposure, mix 4 parts by volume of Heavy Duty Block Filler with 1 part by volume of A-100 Exterior Latex Flat, A6 series. For interior exposures, mix 4 parts by volume of Heavy Duty Block Filler with 1 part by volume of ProMar 200 Interior Latex Flat Wall Paint, B30W200 Series.

APPLICATION CONDITIONS

Temperature:	55°F (13°C) minimum, 95°F (35°C) maximum (air, surface, and material) At least 5°F (2.8°C) above dew point
Relative humidity:	85% maximum

PRODUCT CHARACTERISTICS

Packaging:	5 gallon (18.9L) containers
Weight:	14.25 ± 0.2 lb/gl 1.71 kg/L

SAFETY PRECAUTIONS

Refer to the MSDS sheet before use.

Published technical data and instructions are subject to change without notice. Contact your Sherwin-Williams representative for additional technical data and instructions.

WARRANTY

The Sherwin-Williams Company warrants our products to be free of manufacturing defects in accord with applicable Sherwin-Williams quality control procedures. Liability for products proven defective, if any, is limited to replacement of the defective product or the refund of the purchase price paid for the defective product as determined by Sherwin-Williams. NO OTHER WARRANTY OR GUARANTEE OF ANY KIND IS MADE BY SHERWIN-WILLIAMS, EXPRESSED OR IMPLIED, STATUTORY, BY OPERATION OF LAW OR OTHERWISE, INCLUDING MERCHANTABILITY AND FITNESS FOR A PARTICULAR PURPOSE.

Protective & Marine Coatings

HEAVY DUTY BLOCK FILLER

B42W46

Revised 5/12

APPLICATION BULLETIN

1.01

SURFACE PREPARATIONS

Surface must be clean, dry, and in sound condition. Remove all oil, dust, grease, dirt, loose rust, and other foreign material to ensure adequate adhesion.

Concrete/Masonry

New

For surface preparation, refer to SSPC-SP13/NACE 6, or ICRI No. 310.2, CSP 1-3. Surface must be clean, dry, sound, and offer sufficient profile to achieve adequate adhesion. Minimum substrate cure is 28 days at 75°F (24°C). Remove all form release agents, curing compounds, salts, efflorescence, laitance, and other foreign matter by sandblasting, shotblasting, mechanical scarification, or suitable chemical means. Refer to ASTM D4260. Rinse thoroughly to achieve a final pH between 6.0 and 10.0. Allow to dry thoroughly prior to coating.

Old

For surface preparation, refer to SSPC-SP13/NACE 6, or ICRI No. 310.2, CSP 1-3. Surface preparation is done in much the same manner as new concrete; however, if the concrete is contaminated with oils, grease, chemicals, etc., they must be removed by cleaning with a strong detergent. Refer to ASTM D4258. Form release agents, hardeners, etc. must be removed by sandblasting, shotblasting, mechanical scarification, or suitable chemical means.

Fill all cracks, voids, and bugholes with Steel-Seam FT910.

Follow the standard methods listed below when applicable:

ASTM D4258 Standard Practice for Cleaning Concrete.
ASTM D4259 Standard Practice for Abrading Concrete.
ASTM D4260 Standard Practice for Etching Concrete.
ASTM F1869 Standard Test Method for Measuring Moisture Vapor Emission Rate of Concrete.
SSPC-SP 13/Nace 6 Surface Preparation of Concrete
ICRI No. 310.2

Do not apply over existing coatings.

Surface Preparation Standards

	Condition of Surface	ISO 8501-1 BS7079:A1	Swedish Std. SIS055900	SSPC	NACE
White Metal		Sa 3	Sa 3	SP 5	1
Near White Metal		Sa 2.5	Sa 2.5	SP 10	2
Commercial Blast		Sa 2	Sa 2	SP 6	3
Brush-Off Blast		Sa 1	Sa 1	SP 7	4
Hand Tool Cleaning	Rusted	C St 2	C St 2	SP 2	-
	Pitted & Rusted	D St 2	D St 2	SP 2	-
Power Tool Cleaning	Rusted	C St 3	C St 3	SP 3	-
	Pitted & Rusted	D St 3	D St 3	SP 3	-

APPLICATION CONDITIONS

Temperature:	55°F (13°C) minimum, 95°F (35°C) maximum (air, surface, and material) At least 5°F (2.8°C) above dew point
Relative humidity:	85% maximum

APPLICATION EQUIPMENT

The following is a guide. Changes in pressures and tip sizes may be needed for proper spray characteristics. Always purge spray equipment before use with listed reducer. Any reduction must be compliant with existing VOC regulations and compatible with the existing environmental and application conditions.

Reducer/Clean up .....Water

Airless Spray

Pressure.....2000 psi
Hose.....1/4" - 3/8" ID
Tip.....028"
Filter.....30 mesh
Reduction.....not recommended

Conventional Spray

Gun.....Binks 95
Fluid Nozzle.....67
Air Nozzle.....67PD
Atomization Pressure.....50 psi
Fluid Pressure.....20-25 psi
Reduction.....as needed up to 12½% by volume

Brush

Brush.....Nylon/Polyester
Reduction.....not recommended

Roller

Cover.....1/2" - 1 1/2" synthetic
Reduction.....not recommended

Squeegee also acceptable

If specific application equipment is not listed above, equivalent equipment may be substituted.

continued on back

Protective & Marine Coatings

HEAVY DUTY BLOCK FILLER

B42W46

APPLICATION BULLETIN

1.01

APPLICATION PROCEDURES

Surface preparation must be completed as indicated.

Heavy Duty Block Filler is ready-to-spray (airless) and does not require thinning. Mix material thoroughly to a uniform consistency with power agitation and apply by brush, roller, or spray. Follow by squeegee, trowel, or roller, being careful to force material into pores in order to produce a relatively smooth surface. In severe wet areas, a smooth continuous pinhole-free appearance is necessary for proper protection before topcoating. Two coats will provide the most uniform surface.

Apply paint at the recommended film thickness and spreading rate as indicated below:

Recommended Spreading Rate per coat:
(varies with application, surface irregularities, and degree of sealing and filling desired.)

	Minimum		Maximum	
Wet mils (microns)	**18.0**	(450)	**34.0**	(850)
Dry mils (microns)	**10.0**	(250)	**18.0**	(450)
~Coverage sq ft/gal (m^2/L)	**50**	(1.2)	**88**	(8.2)
Theoretical coverage sq ft/gal (m^2/L) @ 1 mil / 25 microns dft	**848**	(21)		

NOTE: Brush or roll application may require multiple coats to achieve maximum film thickness and uniformity of appearance.

Drying Schedule @ 18.0 mils wet (450 microns):

	@ 55°F/13°C	@ 77°F/25°C *50% RH*	@ 95°F/35°C
To touch:	1.5 hours	1 hour	30 minutes
To handle:	8 hours	6 hours	1 hour
To recoat:			
itself	3 hours	1 hour	30 minutes
water borne	48 hours	18 hours	6 hours
solvent borne	48 hours	48 hours	24 hours
To cure:	30 days	30 days	10 days

Drying time is temperature, humidity, and film thickness dependent.

Application of coating above maximum or below minimum recommended spreading rate may adversely affect coating performance.

CLEAN UP INSTRUCTIONS

Clean spills and spatters immediately with soap and warm water. Clean hands and tools immediately after use with soap and warm water. After cleaning, flush spray equipment with Mineral Spirits to prevent rusting of the equipment. Follow manufacturer's safety recommendations when using Mineral Spirits.

DISCLAIMER

The information and recommendations set forth in this Product Data Sheet are based upon tests conducted by or on behalf of The Sherwin-Williams Company. Such information and recommendations set forth herein are subject to change and pertain to the product offered at the time of publication. Consult your Sherwin-Williams representative to obtain the most recent Product Data Information and Application Bulletin.

PERFORMANCE TIPS

When using spray application, use a 50% overlap with each pass of the gun to avoid holidays, bare areas, and pinholes. If necessary, cross spray at a right angle

Spreading rates are calculated on volume solids and do not include an application loss factor due to surface profile, roughness or porosity of the surface, skill and technique of the applicator, method of application, various surface irregularities, material lost during mixing, spillage, overthinning, climatic conditions, and excessive film build.

Excessive reduction of material can affect film build, appearance, and adhesion.

Make sure material is forced into pores and bugholes in order to provide a pinhole free surface.

Do not use below grade as a hydrostatic waterproofer or in immersion service.

Rolling will provide a textured finish. Squeegee will provide a smoother finish.

For better filling results, apply by airless spray and immediately back roll.

Refer to Product Information sheet for additional performance characteristics and properties.

SAFETY PRECAUTIONS

Refer to the MSDS sheet before use.

Published technical data and instructions are subject to change without notice. Contact your Sherwin-Williams representative for additional technical data and instructions.

WARRANTY

The Sherwin-Williams Company warrants our products to be free of manufacturing defects in accord with applicable Sherwin-Williams quality control procedures. Liability for products proven defective, if any, is limited to replacement of the defective product or the refund of the purchase price paid for the defective product as determined by Sherwin-Williams. NO OTHER WARRANTY OR GUARANTEE OF ANY KIND IS MADE BY SHERWIN-WILLIAMS, EXPRESSED OR IMPLIED, STATUTORY, BY OPERATION OF LAW OR OTHERWISE, INCLUDING MERCHANTABILITY AND FITNESS FOR A PARTICULAR PURPOSE.

Protective & Marine Coatings

RECOATABLE EPOXY PRIMER

PART G	B67A5	LIGHT GRAY
PART G	B67H5	TAN
PART G	B67R5	RED OXIDE
PART H	B67V5	HARDENER

Revised: February 11, 2013

PRODUCT INFORMATION

4.45

PRODUCT DESCRIPTION

RECOATABLE EPOXY PRIMER is a rust inhibitive high build catalyzed polyamide/bisphenol A epoxy primer designed for fast dry and quick or extended recoatability.

- Meets Class A requirements for Slip Coefficient, .50 (Red Oxide only)
- Long pot life
- High build coating for economical application
- One year recoatability
- Low temperature application - down to 35°F (1.5°C)
- Corrosion resistant (contains zinc phosphate)
- Outstanding application properties

PRODUCT CHARACTERISTICS

Finish:	Flat
Color:	Red Oxide, Tan, Light Gray
Volume Solids:	65% ± 2%, mixed
Weight Solids:	81% ± 2%, mixed
VOC (EPA Method 24): mixed	Unreduced: <320 g/L; 2.67 lb/gal Reduced 5%: <340 g/L; 2.88 lb/gal
Mix Ratio:	1:1 by volume

Recommended Spreading Rate per coat:

	Minimum	Maximum
Wet mils (microns)	**6.0** (150)	**9.0** (225)
Dry mils (microns)	**4.0*** (100)	**6.0*** (150)
~Coverage sq ft/gal (m^2/L)	**175** (4.3)	**260** (6.4)
Theoretical coverage **sq ft/gal** (m^2/L) @ 1 mil / 25 microns dft	**1040** (25.5)	

*See Performance Tips section

NOTE: Brush or roll application may require multiple coats to achieve maximum film thickness and uniformity of appearance.

Drying Schedule @ 6.0 mils wet (150 microns):

	@ 35°F/1.5°C	@ 77°F/25°C *50% RH*	@ 120°F/49°C
To touch:	1 hour	15 minutes	10 minutes
Tack free:	2 hours	30 minutes	15 minutes
To recoat:			
minimum:	6 hours	2 hours	30 minutes
maximum:	1 year	1 year	1 year
To cure:	14 days	14 days	2 days
Pot Life:	8+ hours	8 hours	3 hours
Sweat-in-time:	1 hour	30 minutes	10 minutes

If maximum recoat time is exceeded, abrade surface before recoating.

Drying time is temperature, humidity, and film thickness dependent.

Shelf Life:	36 months, unopened Store indoors at 40°F (4.5°C) to 100°F (38°C).
Flash Point:	80°F (27°C), PMCC, mixed
Reducer/Clean Up:	
Below 80°F (27°C):	Reducer #54, R7K54
Above 80°F (27°C):	Reducer #100, R7K100 or R7K104
In California:	Reducer R7K111

RECOMMENDED USES

For use as a shop or field applied epoxy primer where a variable recoat window is required due to construction schedules, distribution logistics and environmental considerations. Affords flexibility in projects when completion schedules cannot be specified.

- Primer for structural steel
- Paper mills
- Power plants
- Suitable for use in USDA inspected facilities
- Nuclear Power Plants
- Nuclear fabrication shops
- Marine applications
- Storage tanks
- DOE Nuclear Fuel Facilities
- DOE Nuclear Weapons Facilities
- This product meets specific design requirements for non-safety related nuclear plant applications in Level II, III and Balance of Plant, and DOE nuclear facilities*.

* Nuclear qualifications are NRC license specific to the facility.

PERFORMANCE CHARACTERISTICS

Substrate*: Steel

Surface Preparation*: SSPC-SP6/NACE 3

System Tested*:

1 ct. Recoatable Epoxy Primer @ 5.0 mils (125 microns) dft

*unless otherwise noted below

Test Name	Test Method	Results
Abrasion Resistance	ASTM D4060, CS17 wheel, 1000 cycles, 1 kg load	200 mg loss
Accelerated Weathering - QUV[1]	ASTM D4587, QUV-A, 5,000 hours	Passes
Adhesion	ASTM D4541	1050 psi
Corrosion Weathering	ASTM D5894, 13 cycles, 4,368 hours	Rating 10 per ASTM D714 for Blistering; Rating 7 per ASTM D610 for Rusting
Direct Impact Resistance	ASTM D2794	160 in. lbs.
Dry Heat Resistance	ASTM D2485	250°F (121°C) (discolors)
Flexibility	ASTM D522, 180° bend, 1" mandrel	Passes
Moisture Condensation Resistance	ASTM D4585, 100°F (38°C), 2000 hours	Passes, no cracking or delamination
Pencil Hardness	ASTM D3363	3H
Salt Fog Resistance[1]	ASTM B117, 5,600 hours	Passes, no cracking or delamination
Slip Coefficient, Red Oxide**	AISC Specification for Structural Joints Using ASTM A325 or ASTM A490 Bolts	Class A, 0.50
Surface Burning*	ASTM E84/NFPA 255	Flame Spread Index 15; Smoke Development Index 30

*System tested (Report No. IM54.1157-02-01):
Recoatable Epoxy Primer @ 4.6 mils (115 microns) dft
Macropoxy 646 @ 5.0 mils (125 microns) dft

**Refer to Slip Certification document

Epoxy coatings may darken or yellow following application and curing.

Provides performance comparable to products formulated to federal specifications: Mil-P-23377, Mil-P-53022

Footnotes:
[1] Acrolon 218 HS topcoat

continued on back

Protective & Marine Coatings RECOATABLE EPOXY PRIMER

PART G	B67A5	LIGHT GRAY
PART G	B67H5	TAN
PART G	B67R5	RED OXIDE
PART H	B67V5	HARDENER

APPLICATION BULLETIN

4.45

APPLICATION PROCEDURES

Surface preparation must be completed as indicated.

Mix contents of each component thoroughly with low speed power agitation. Make certain no pigment remains on the bottom of the cans. Then combine one part by volume of Part G with one part by volume of Part H. Thoroughly agitate the mixture with power agitation. Allow the material to sweat-in as indicated. Re-stir before using.

If reducer solvent is used, add only after both components have been thoroughly mixed, after sweat-in.

Apply paint at the recommended film thickness and spreading rate as indicated below:

Recommended Spreading Rate per coat:

	Minimum	Maximum
Wet mils (microns)	**6.0** (150)	**9.0** (225)
Dry mils (microns)	**4.0*** (100)	**6.0*** (150)
~Coverage sq ft/gal (m^2/L)	**175** (4.3)	**260** (6.4)
Theoretical coverage **sq ft/gal** (m^2/L) @ 1 mil / 25 microns dft	**1040** (25.5)	

*See Performance Tips section

NOTE: Brush or roll application may require multiple coats to achieve maximum film thickness and uniformity of appearance.

Drying Schedule @ 6.0 mils wet (150 microns):

	@ 35°F/1.5°C	@ 77°F/25°C *50% RH*	@ 120°F/49°C
To touch:	1 hour	15 minutes	10 minutes
Tack free:	2 hours	30 minutes	15 minutes
To recoat:			
minimum:	6 hours	2 hours	30 minutes
maximum:	1 year	1 year	1 year
To cure:	14 days	14 days	2 days
Pot Life:	8+ hours	8 hours	3 hours
Sweat-in-time:	1 hour	30 minutes	10 minutes

If maximum recoat time is exceeded, abrade surface before recoating.
Drying time is temperature, humidity, and film thickness dependent.

Application of coating above maximum or below minimum recommended spreading rate may adversely affect coating performance.

CLEAN UP INSTRUCTIONS

Clean spills and spatters immediately with Reducer #54, R7K54. Clean tools immediately after use with Reducer #54, R7K54. Follow manufacturer's safety recommendations when using any solvent.

DISCLAIMER

The information and recommendations set forth in this Product Data Sheet are based upon tests conducted by or on behalf of The Sherwin-Williams Company. Such information and recommendations set forth herein are subject to change and pertain to the product offered at the time of publication. Consult your Sherwin-Williams representative to obtain the most recent Product Data Information and Application Bulletin.

PERFORMANCE TIPS

Stripe coat all crevices, welds, and sharp angles to prevent early failure in these areas.

When using spray application, use a 50% overlap with each pass of the gun to avoid holidays, bare areas, and pinholes. If necessary, cross spray at a right angle.

Spreading rates are calculated on volume solids and do not include an application loss factor due to surface profile, roughness or porosity of the surface, skill and technique of the applicator, method of application, various surface irregularities, material lost during mixing, spillage, overthinning, climatic conditions, and excessive film build.

Excessive reduction of material can affect film build, appearance, and adhesion.

Do not apply the material beyond recommended pot life.

Do not mix previously catalyzed material with new.

In order to avoid blockage of spray equipment, clean equipment before use or before periods of extended downtime with Reducer #54, R7K54.

Material must be at least 50°F (10°C) prior to catalyzing.

Quik-Kick Epoxy Accelerator is acceptable for use. See data page 4.99 for details.

When coating over aluminum and galvanizing, recommended dft is 2-4 mils (50-100 microns).

Refer to Product Information sheet for additional performance characteristics and properties.

SAFETY PRECAUTIONS

Refer to the MSDS sheet before use.

Published technical data and instructions are subject to change without notice. Contact your Sherwin-Williams representative for additional technical data and instructions.

WARRANTY

The Sherwin-Williams Company warrants our products to be free of manufacturing defects in accord with applicable Sherwin-Williams quality control procedures. Liability for products proven defective, if any, is limited to replacement of the defective product or the refund of the purchase price paid for the defective product as determined by Sherwin-Williams. NO OTHER WARRANTY OR GUARANTEE OF ANY KIND IS MADE BY SHERWIN-WILLIAMS, EXPRESSED OR IMPLIED, STATUTORY, BY OPERATION OF LAW OR OTHERWISE, INCLUDING MERCHANTABILITY AND FITNESS FOR A PARTICULAR PURPOSE.

PRO INDUSTRIAL™

113.01

PRE-CATALYZED WATERBASED EPOXY

K45-150 SERIES — EG-SHEL
K46-150 SERIES — SEMI-GLOSS

As of 03/01/2013, Complies with:			
OTC	Yes	LEED® 09 CI	Yes
SCAQMD	No	LEED® 09 NC	Yes
CARB	Yes	LEED® 09 CS	Yes
CARB SCM 2007	Yes	LEED® 09 S	Yes
NGBS	Yes		
MPI # Eg-Shel-139,151;Semi-Gloss - 141,153			

CHARACTERISTICS

Pro Industrial Pre-Catalyzed Water-based Epoxies are revolutionary, single-component pre-catalyzed waterborne acrylic epoxies that offers the adhesion, durability and resistance to stains and most cleaning solvents usually characteristic of two-component waterborne acrylic epoxy products.

These products can be applied over a wide variety of primers on properly prepared **interior** metal, wood, masonry, plaster and drywall.

- Interior institutional/commercial high maintenance areas
- Upgrade surfaces painted with conventional coatings with a high performance protection system with excellent adhesion
- Corrosion and Chemical resistant
- Hospitals and Schools
- Institutional dining and kitchen areas
- Suitable for use in USDA inspected facilities

Color: most colors

Recommended Spread Rate per coat:
4.0 mils wet; 1.5 mils dry
350 - 400 sq ft/gal

NOTE: Brush or roll application may require multiple coats to achieve maximum film thickness and uniformity of appearance.

Drying Time @ 4.0 mils wet, 50% RH, 77°F: temperature and humidity dependent

Touch: 1 hour
Recoat: 8 hours

Drying time is temperature, humidity, and film thickness dependent.

Finish:
Eg-Shel 20 - 30 units @ 85°
Semi-Gloss 55 - 65 units @ 60°

Flash Point: N/A

Shelf Life: 36 months, unopened
Store indoors at 40°F to 100°F.

Tinting with CCE or BAC:
Use SherCOLOR Formulation System
K45W00151

VOC (less exempt solvents):
<150 g/L; 1.25 lb/gal

Volume Solids: 37 ± 2%

Weight Solids: 51 ± 2%

Weight per Gallon: 10.6 lb ± 0.2 lb

RECOMMENDED SYSTEMS

Block
1 ct. Loxon Block Surfacer
2 cts. Pro Industrial Pre-Catalyzed Epoxy

Drywall
1 ct. ProMar 200 Primer
2 cts. Pro Industrial Pre-Catalyzed Epoxy

Masonry
1 ct. Loxon Masonry Primer
2 cts. Pro Industrial Pre-Catalyzed Epoxy

Steel, Aluminum, Galvanized
1 ct. Pro Industrial Pro-Cryl Primer
2 cts. Pro Industrial Pre-Catalyzed Epoxy

Wood
1 ct. Premium Wall and Wood Primer
2 cts. Pro Industrial Pre-Catalyzed Epoxy

System Tested:
Substrate: Steel
Surface Preparation: SSPC-SP6
Primer: 1 ct. DTM Acrylic Primer
Finish: 1 ct. Pro Industrial Pre-Catalyzed Epoxy Eg-Shel

Adhesion
Method: ASTM D3359
Result: 5B
100% Adhesion for light colors; Darker colors require longer cure time for same level of adhesion

Block Resistance
Lab Assessment Excellent

Pencil Hardness:
Method: ASTM D3363
Result: 2B

Scrub Resistance
Method: ASTM D 2486
Result: 500 - 600cycles
with Stiff Bristle Brush and Pumice Scrub Media

Chemical Resistance
ASTM D 1308 Rating:

Excellent Resistance	•
Limited Resistance	x

Distilled Water (Hot and at Room Temperature)	•
Ethyl Alcohol	•
Vinegar (3% acetic acid)	•
Alkali (10% Sodium Hydroxide)	•
Acid (10% Sulfuric Acid)	•
Soap (10% Fantastik®)	•
50/50 Xylene/Mineral Spirits	•

Stain Resistance
ASTM D 3023 Rating:

Excellent Resistance	•
Limited Resistance	x

Mustard	•
Grape Juice	•
Red Crayon	x
Lipstick, Red	•
Permanent Ink	x
Coffee	•
10% Sodium Hydroxide (alkali)	•
Acetic Acid	•

continued on back

PRO INDUSTRIAL™
PRE-CATALYZED WATERBASED EPOXY

SHERWIN-WILLIAMS.

SURFACE PREPARATION

WARNING! Removal of old paint by sanding, scraping or other means may generate dust or fumes that contain lead. Exposure to lead dust or fumes may cause brain damage or other adverse health effects, especially in children or pregnant women. Controlling exposure to lead or other hazardous substances requires the use of proper protective equipment, such as a properly fitted respirator (NIOSH approved) and proper containment and cleanup. For more information, call the National Lead Information Center at 1-800-424-LEAD (in US) or contact your local health authority.

Remove all surface contamination including mildew by washing with an appropriate cleaner, rinse thoroughly and allow to dry. Scrape and sand peeled or checked paint to a sound surface. Sand glossy surfaces dull. Seal stains from water, smoke, ink, pencil, grease, etc. with an appropriate primer/sealer.

Iron & Steel - Minimum surface preparation is Hand Tool Clean per SSPC-SP2. Remove all oil and grease from surface per SSPC-SP1. For better performance, use Commercial Blast Cleaning per SSPC-SP6. Primer recommended for best performance.

Aluminum - Remove all oil, grease, dirt, oxide and other foreign material per SSPC-SP1.

Galvanizing - Allow to weather a minimum of six months prior to coating. Solvent Clean per SSPC-SP1. When weathering is not possible, or the surface has been treated with chromates or silicates, first Solvent Clean per SSPC-SP1 and apply a test patch. Allow paint to dry at least one week before testing adhesion. If adhesion is poor, brush blasting per SSPC-SP7 is necessary to remove these treatments. Rusty galvanizing requires a minimum of Hand Tool Cleaning per SSPC-SP2, prime the area the same day as cleaned.

Concrete and Masonry - For surface preparation, refer to SSPC-SP13/NACE 6 or ICRI 03732, CSP 1-3. Surfaces should be thoroughly cleaned and dry. Surface temperatures must be at least 55°F before filling. If required for a smoother finish, use the recommended filler/surfacer. The filler/surfacer must be thoroughly dry before topcoating per manufacturer's recommendations.
Weathered masonry and soft or porous cement board must be brush blasted or power tool cleaned to remove loosely adhering contamination and to get to a hard, firm surface. Apply one coat Loxon Conditioner, following label recommendations.

Drywall - Fill cracks and holes with patching paste/spackle and sand smooth. Joint compounds must be cured and sanded smooth. Remove all sanding dust.

Wood - Sand any exposed wood to a fresh surface. Patch all holes and imperfections with a wood filler or putty and sand smooth.

Previously Painted Surfaces - If in sound condition, clean the surface of all foreign material. Smooth, hard or glossy coatings and surfaces should be dulled by abrading the surface. Apply a test area, allowing paint to dry one week before testing adhesion. If adhesion is poor, additional abrasion of the surface and/or removal of the previous coating may be necessary. Retest surface for adhesion. If paint is peeling or badly weathered, clean surface to sound substrate and treat as a new surface as above.

APPLICATION

Refer to the MSDS before use.
Temperature: 50°F minimum
120°F maximum
(Air, surface, and material)
At least 5°F above dew point
Relative humidity: 85% maximum

The following is a guide. Changes in pressures and tip sizes may be needed for proper spray characteristics. Always purge spray equipment before use with listed reducer. Any reduction must be compatible with the existing environmental and application conditions.

Airless Spray
Pressure ..... 1800 - 2700 psi
Hose ..... 1/4" ID
Tip ..... .015" - .021"
Filter ..... 60 mesh
Reduction ..... Not recommended

Brush ..... Nylon / polyester
Reduction ..... Not recommended

Roller ..... 1/4 - 1/2" woven
Reduction ..... Not recommended

If specific application equipment is listed above, equivalent equipment may be substituted.

CLEANUP INFORMATION

Clean spills, spatters, hands and tools immediately after use with soap and warm water. After cleaning, flush spray equipment with mineral spirits to prevent rusting of the equipment. Follow manufacturer's safety recommendations when using mineral spirits.

CAUTION

Not for use on surfaces continuously wet or under water, such as bath tubs, sinks, showers, or countertops.

The information and recommendations set forth in this Product Data Sheet are based upon tests conducted by or on behalf of The Sherwin-Williams Company. Such information and recommendations set forth herein are subject to change and pertain to the product offered at the time of publication. Consult your Sherwin-Williams representative to obtain the most recent Product Data Information and Application Bulletin. The Sherwin-Williams Company warrants our products to be free of manufacturing defects in accord with applicable Sherwin-Williams quality control procedures. Liability for products proven defective, if any, is limited to replacement of the defective product or the refund of the purchase price paid for the defective product as determined by Sherwin-Williams. NO OTHER WARRANTY OR GUARANTEE OF ANY KIND IS MADE BY SHERWIN-WILLIAMS, EXPRESSED OR IMPLIED, STATUTORY, BY OPERATION OF LAW OR OTHERWISE, INCLUDING MERCHANTABILITY AND FITNESS FOR A PARTICULAR PURPOSE.

Protective & Marine Coatings

HI-SOLIDS POLYURETHANE

PART S	B65-300	GLOSS SERIES
PART S	B65-350	SEMI-GLOSS SERIES
PART S	B65WW305	MR, WHITE TINT BASE (GLOSS)
PART T	B60V30	HARDENER

Revised: June 5, 2013

PRODUCT INFORMATION

5.21

PRODUCT DESCRIPTION

HI-SOLIDS POLYURETHANE is a two-component, low VOC, aliphatic, acrylic polyurethane resin coating. It is designed for high performance protection with outstanding exterior gloss and color retention.

- Good/excellent resistance to corrosion and weathering
- Outstanding color and gloss retention
- Chemical resistant
- Part of a system tested for nuclear irradiation and decontamination, Level II
- Resists film attack by mildew (MR White only)
- Outstanding application properties

PRODUCT CHARACTERISTICS

Finish:	High Gloss or Semi-Gloss
Color:	Wide range of colors possible
Volume Solids:	65% ± 2%, mixed, may vary by color
Weight Solids:	77% ± 2%, mixed, may vary by color
VOC (EPA Method 24):	Unreduced: <340g/L; 2.80 lb/gal mixed Reduced 15%: <370 g/L; 3.08 lb/gal May vary by color
Mix Ratio:	4:1 by volume

Recommended Spreading Rate per coat:

	Minimum	Maximum
Wet mils (microns)	**4.5** (112)	**8.0** (200)
Dry mils (microns)	**3.0** (75)	**5.0** (125)
~Coverage sq ft/gal (m^2/L)	**208** (5.1)	**347** (8.5)
Theoretical coverage sq ft/gal (m^2/L) @ 1 mil / 25 microns dft	**1040** (25.5)	

NOTE: Brush or roll application may require multiple coats to achieve maximum film thickness and uniformity of appearance.

Drying Schedule @ 4.5 mils wet (112 microns):

	@ 40°F/4.5°C	@ 77°F/25°C *50% RH*	@ 120°F/49°C
To touch:	4 hours	2 hours	1 hour
To handle:	16 hours	8 hours	5 hours
To recoat:			
minimum	24 hours	18 hours	10 hours
maximum	14 days	14 days	14 days
To cure:	14 days	10 days	7 days
Pot Life:	8 hours	4 hours	2 hours
Sweat-in-Time:		None required	

If maximum recoat time is exceeded, abrade surface before recoating. Drying time is temperature, humidity, and film thickness dependent.

Shelf Life:	Part S - 36 months, unopened Part T - 24 months, unopened Store indoors at 40°F (4.5°C) to 100°F (38°C).
Flash Point:	80°F (27°C), PMCC, mixed
Reducer/Clean Up: Below 80°F (27°C): Above 80°F (27°C):	 Reducer #69, R7K69 or R7K111 Reducer #58, R7K58 or R6K32

RECOMMENDED USES

- For use over prepared substrates in industrial environments
- Heavy duty interior and exterior structural coating
- A chemical and abrasion resistant equipment and machinery finish
- A gloss and color retentive heavy duty maintenance coating for use in "high visibility" areas
- Exterior surfaces of steel tanks • Refineries • Clean rooms
- Chemical processing equipment • Conveyors • Handrails
- Marine & Offshore Applications • Power Plants
- Resists film attack by mildew (MR White only)
- Suitable for use in USDA inspected facilities
- Conforms to AWWA D102 OCS #5 & #6.
- Acceptable for use in high performance architectural applications
- As topcoat for NEPCOAT System A
- Over FIRETEX hydrocarbon systems

PERFORMANCE CHARACTERISTICS

Substrate*: Steel

Surface Preparation*: SSPC-SP6/NACE 3

System Tested*:

1 ct. Recoatable Epoxy Primer @ 4.0 mils (100 microns) dft
1 ct. Hi-Solids Polyurethane Gloss @ 3.0 mils (75 microns) dft

*unless otherwise noted below

Test Name	Test Method	Results
Abrasion Resistance	ASTM D4060, CS17 wheel, 1000 cycles, 1 kg load	87.1 mg loss
Adhesion	ASTM D4541	1050 psi
Corrosion Weathering[1]	ASTM D5894, 21 cycles, 7056 hours	Rating 10 per ASTM D714 for blistering; Rating 9 per ASTM D610 for rusting
Direct Impact Resistance	ASTM D2794	>28 in. lbs.
Dry Heat Resistance	ASTM D2485	200°F (93°C)
Flexibility	ASTM D522, 180° bend, 1/8" mandrel	Passes
Moisture Condensation Resistance	ASTM D4585, 100°F (38°C), 1000 hours	No rusting, blistering, or delamination
Pencil Hardness	ASTM D3363	F
Salt Fog Resistance[1]	ASTM B117, 9000 hours	Rating 10 per ASTM D714 for blistering; Rating 9 per ASTM D610 for rusting
Surface Burning	ASTM E84	Flame Spread Index 0; Smoke Development Index 0 (at 3.5 mils or 88 microns)
Thermal Shock	ASTM D2246, 15 cycles	Excellent

Meets the requirements of SSPC Paint No. 36, Level 3 for white and light colors. Dark colors may require a clear coat.

Footnotes:

[1] Primer: Zinc Clad II Plus; Intermediate - Recoatable Epoxy Primer

continued on back

Protective & Marine Coatings

HI-SOLIDS POLYURETHANE

PART S	B65-300	GLOSS SERIES
PART S	B65-350	SEMI-GLOSS SERIES
PART S	B65WW305	MR, WHITE TINT BASE (GLOSS)
PART T	B60V30	HARDENER

PRODUCT INFORMATION

5.21

RECOMMENDED SYSTEMS

		Dry Film Thickness / ct. Mils	(Microns)
Steel: Epoxy Primer			
1 ct.	Recoatable Epoxy Primer	4.0-6.0	(100-150)
1-2 cts.	Hi-Solids Polyurethane	3.0-5.0	(75-125)
Steel: Epoxy Primer			
1 ct.	Dura-Plate 235	4.0-8.0	(100-200)
1-2 cts.	Hi-Solids Polyurethane	3.0-5.0	(75-125)
Steel: Zinc Rich Primer			
1 ct.	Zinc Clad II Plus	2.0-4.0	(50-100)
1 ct.	Macropoxy 646	5.0-10.0	(125-250)
1-2 cts.	Hi-Solids Polyurethane	3.0-5.0	(75-125)
Steel: Epoxy Mastic Primer			
1 ct.	Macropoxy 646	5.0-10.0	(125-250)
1-2 cts.	Hi-Solids Polyurethane	3.0-5.0	(75-125)
Steel: Universal Primer			
1 ct.	Kem Bond HS Metal	2.0-5.0	(50-125)
1-2 cts.	Hi-Solids Polyurethane	3.0-5.0	(75-125)
Steel: NEPCOAT			
1 ct.	Zinc Clad DOT	2.0-4.0	(50-100)
1 ct.	Steel Spec Epoxy Intermediate	3.0-6.0	(75-150)
1 ct.	Hi-Solids Polyurethane	3.0-5.0	(75-125)
Aluminum:			
1 ct.	DTM Wash Primer	0.7-1.3	(18-32)
1-2 cts.	Hi-Solids Polyurethane	3.0-5.0	(75-125)
Concrete:			
1 ct.	Kem Cati-Coat Epoxy HS Filler/Sealer	10.0-15.0	(250-375)
1-2 cts.	Hi-Solids Polyurethane	3.0-5.0	(75-125)
Galvanized Metal:			
1 ct.	Recoatable Epoxy Primer	4.0-6.0	(100-150)
1-2 cts.	Hi-Solids Polyurethane	3.0-5.0	(75-125)

FIRETEX ONLY:

Finish Coat for FIRETEX Hydrocarbon Systems:

1 ct. Hi-Solids Polyurethane*

*Consult FIRETEX PFP Specialist for recommended dft range

The systems listed above are representative of the product's use, other systems may be appropriate.

DISCLAIMER

The information and recommendations set forth in this Product Data Sheet are based upon tests conducted by or on behalf of The Sherwin-Williams Company. Such information and recommendations set forth herein are subject to change and pertain to the product offered at the time of publication. Consult your Sherwin-Williams representative to obtain the most recent Product Data Information and Application Bulletin.

SURFACE PREPARATION

Surface must be clean, dry, and in sound condition. Remove all oil, dust, grease, dirt, loose rust, and other foreign material to ensure adequate adhesion.

Refer to product Application Bulletin for detailed surface preparation information.

Minimum recommended surface preparation:

* Iron & Steel:	SSPC-SP6/NACE 3, 2 mil (50 micron) profile
* Aluminum:	SSPC-SP1
* Galvanizing:	SSPC-SP1
* Concrete & Masonry:	SSPC-SP13/NACE 6, or ICRI No. 310.2, CSP 1-3

* Primer Required

Surface Preparation Standards

	Condition of Surface	ISO 8501-1 BS7079:A1	Swedish Std. SIS055900	SSPC	NACE
White Metal		Sa 3	Sa 3	SP 5	1
Near White Metal		Sa 2.5	Sa 2.5	SP 10	2
Commercial Blast		Sa 2	Sa 2	SP 6	3
Brush-Off Blast		Sa 1	Sa 1	SP 7	4
Hand Tool Cleaning	Rusted	C St 2	C St 2	SP 2	-
	Pitted & Rusted	D St 2	D St 2	SP 2	-
Power Tool Cleaning	Rusted	C St 3	C St 3	SP 3	-
	Pitted & Rusted	D St 3	D St 3	SP 3	-

TINTING

Tint with Maxitoner Colorants only into Part S. Extra White tints at 200% tint strength. Ultradeep tints at 150% tint strength. Five minutes minimum mixing on a mechanical shaker is required for complete mixing of color.

APPLICATION CONDITIONS

Temperature:	35°F (1.7°C) minimum 120°F (49°C) maximum (air, surface, and material) At least 5°F (2.8°C) above dew point
Relative humidity:	85% maximum

Refer to product Application Bulletin for detailed application information.

ORDERING INFORMATION

Packaging:	
Part S:	1 gallon (3.78L) and 4 gallon (15.1L) kits
Part T:	quarts (0.94L) and gallons (3.78L)
Weight:	10.7 ± 0.2 lb/gal ; 1.28 Kg/L mixed, may vary with color

SAFETY PRECAUTIONS

Refer to the MSDS sheet before use.

Published technical data and instructions are subject to change without notice. Contact your Sherwin-Williams representative for additional technical data and instructions.

WARRANTY

The Sherwin-Williams Company warrants our products to be free of manufacturing defects in accord with applicable Sherwin-Williams quality control procedures. Liability for products proven defective, if any, is limited to replacement of the defective product or the refund of the purchase price paid for the defective product as determined by Sherwin-Williams. NO OTHER WARRANTY OR GUARANTEE OF ANY KIND IS MADE BY SHERWIN-WILLIAMS, EXPRESSED OR IMPLIED, STATUTORY, BY OPERATION OF LAW OR OTHERWISE, INCLUDING MERCHANTABILITY AND FITNESS FOR A PARTICULAR PURPOSE.

Protective & Marine Coatings

HI-SOLIDS POLYURETHANE

PART S	B65-300	GLOSS SERIES
PART S	B65-350	SEMI-GLOSS SERIES
PART S	B65WW305	MR, WHITE TINT BASE (GLOSS)
PART T	B60V30	HARDENER

Revised: June 5, 2013

APPLICATION BULLETIN

5.21

SURFACE PREPARATIONS

Surface must be clean, dry, and in sound condition. Remove all oil, dust, grease, dirt, loose rust, and other foreign material to ensure adequate adhesion.

Iron & Steel
Remove all oil and grease from surface by Solvent Cleaning per SSPC-SP1. Minimum surface preparation is Commercial Blast Cleaning per SSPC-SP6/NACE 3. For better performance, use Near White Metal Blast Cleaning per SSPC-SP10/NACE 2. Blast clean all surfaces using a sharp, angular abrasive for optimum surface profile (2 mils / 50 microns). Prime any bare steel the same day as it is cleaned or before flash rusting occurs.

Aluminum
Remove all oil, grease, dirt, oxide and other foreign material by Solvent Cleaning per SSPC-SP1. Primer required.

Galvanized Steel
Allow to weather a minimum of six months prior to coating. Remove all oil, grease, dirt, oxide and other foreign material by Solvent Cleaning per SSPC-SP1. When weathering is not possible, or the surface has been treated with chromates or silicates, first Solvent Clean per SSPC-SP1 and apply a test patch. Allow paint to dry at least one week before testing adhesion. If adhesion is poor, brush blasting per SSPC-SP7 is necessary to remove these treatments. Rusty galvanizing requires a minimum of Hand Tool Cleaning per SSPC-SP2, prime the area the same day as cleaned. Primer required.

Concrete and Masonry
For surface preparation, refer to SSPC-SP13/NACE 6, or ICRI No. 310.2, CSP 1-3. Surfaces should be thoroughly clean and dry. Concrete and mortar must be cured at least 28 days @ 75°F (24°C). Remove all loose mortar and foreign material. Surface must be free of laitance, concrete dust, dirt, form release agents, moisture curing membranes, loose cement and hardeners. Fill bug holes, air pockets and other voids with Steel-Seam FT910. Primer required.

Follow the standard methods listed below when applicable:
ASTM D4258 Standard Practice for Cleaning Concrete.
ASTM D4259 Standard Practice for Abrading Concrete.
ASTM D4260 Standard Practice for Etching Concrete.
ASTM F1869 Standard Test Method for Measuring Moisture Vapor Emission Rate of Concrete.
SSPC-SP 13/Nace 6 Surface Preparation of Concrete.
ICRI No. 310.2 Concrete Surface Preparation.

Surface Preparation Standards

	Condition of Surface	ISO 8501-1 BS7079:A1	Swedish Std. SIS055900	SSPC	NACE
White Metal		Sa 3	Sa 3	SP 5	1
Near White Metal		Sa 2.5	Sa 2.5	SP 10	2
Commercial Blast		Sa 2	Sa 2	SP 6	3
Brush-Off Blast		Sa 1	Sa 1	SP 7	4
Hand Tool Cleaning	Rusted	C St 2	C St 2	SP 2	-
	Pitted & Rusted	D St 2	D St 2	SP 2	-
Power Tool Cleaning	Rusted	C St 3	C St 3	SP 3	-
	Pitted & Rusted	D St 3	D St 3	SP 3	-

APPLICATION CONDITIONS

Temperature:	35°F (1.7°C) minimum 120°F (49°C) maximum (air, surface, and material) At least 5°F (2.8°C) above dew point
Relative humidity:	85% maximum

APPLICATION EQUIPMENT

The following is a guide. Changes in pressures and tip sizes may be needed for proper spray characteristics. Always purge spray equipment before use with listed reducer. Any reduction must be compliant with existing VOC regulations and compatible with the existing environmental and application conditions.

Reducer/Clean Up
Below 80°F (27°C).....Reducer #69, R7K69 or R7K111
Above 80°F (27°C).....Reducer #58, R7K58 or R6K32

Airless Spray
Pressure.....2500 - 2800 psi
Hose.....3/8" ID
Tip.....013" - .017"
Filter.....none
Reduction.....As needed up to 10% by volume

Conventional Spray
Gun.....Binks 95
Fluid Nozzle.....63 B
Atomization Pressure....50 - 70 psi
Fluid Pressure.....20 - 25 psi
Reduction.....As needed up to 15% by volume

Brush
Brush.....Natural bristle
Reduction.....As needed up to 15% by volume

Roller
Cover.....3/8" woven with solvent resistant core
Reduction.....As needed up to 15% by volume

If specific application equipment is not listed above, equivalent equipment may be substituted.

continued on back

Protective & Marine Coatings

HI-SOLIDS POLYURETHANE

PART S	B65-300	GLOSS SERIES
PART S	B65-350	SEMI-GLOSS SERIES
PART S	B65WW305	MR, WHITE TINT BASE (GLOSS)
PART T	B60V30	HARDENER

APPLICATION BULLETIN

5.21

APPLICATION PROCEDURES

Surface preparation must be completed as indicated.

Mix contents of each component thoroughly with low speed power agitation. Make certain no pigment remains on the bottom of the can. Then combine 4 parts by volume of Part S with 1 part by volume of Part T. Thoroughly agitate the mixture with power agitation.

If reducer solvent is used, add only after both components have been thoroughly mixed.

Apply paint at the recommended film thickness and spreading rate as indicated below:

Recommended Spreading Rate per coat:

	Minimum	Maximum
Wet mils (microns)	**4.5** (112)	**8.0** (200)
Dry mils (microns)	**3.0** (75)	**5.0** (125)
~Coverage sq ft/gal (m^2/L)	**208** (5.1)	**347** (8.5)
Theoretical coverage sq ft/gal (m^2/L) @ 1 mil / 25 microns dft	**1040** (25.5)	

NOTE: Brush or roll application may require multiple coats to achieve maximum film thickness and uniformity of appearance.

Drying Schedule @ 4.5 mils wet (112 microns):

	@ 40°F/4.5°C	@ 77°F/25°C *50% RH*	@ 120°F/49°C
To touch:	4 hours	2 hours	1 hour
To handle:	16 hours	8 hours	5 hours
To recoat:			
minimum	24 hours	18 hours	10 hours
maximum	14 days	14 days	14 days
To cure:	14 days	10 days	7 days
Pot Life:	8 hours	4 hours	2 hours
Sweat-in-Time:		None required	

If maximum recoat time is exceeded, abrade surface before recoating. Drying time is temperature, humidity, and film thickness dependent.

Application of coating above maximum or below minimum recommended spreading rate may adversely affect coating performance.

CLEAN UP INSTRUCTIONS

Clean spills and spatters immediately with Reducer #58, R7K58. Clean tools immediately after use with Reducer #58, R7K58. Follow manufacturer's safety recommendations when using any solvent.

DISCLAIMER

The information and recommendations set forth in this Product Data Sheet are based upon tests conducted by or on behalf of The Sherwin-Williams Company. Such information and recommendations set forth herein are subject to change and pertain to the product offered at the time of publication. Consult your Sherwin-Williams representative to obtain the most recent Product Data Information and Application Bulletin.

PERFORMANCE TIPS

Stripe coat all crevices, welds, and sharp angles to prevent early failure in these areas.

When using spray application, use a 50% overlap with each pass of the gun to avoid holidays, bare areas, and pinholes. If necessary, cross spray at a right angle.

Spreading rates are calculated on volume solids and do not include an application loss factor due to surface profile, roughness or porosity of the surface, skill and technique of the applicator, method of application, various surface irregularities, material lost during mixing, spillage, overthinning, climatic conditions, and excessive film build.

Excessive reduction of material can affect film build, appearance, and adhesion.

Do not apply the material beyond recommended pot life.

Do not mix previously catalyzed material with new.

In order to avoid blockage of spray equipment, clean equipment before use or before periods of extended downtime with Reducer #58, R7K58.

Mixed coating is sensitive to water. Use water traps in all air lines. Moisture contact can reduce pot life and affect gloss and color.

Quick-Thane Urethane Accelerator is acceptable for use. See data page 5.97 for details.

E-Z Roll Urethane Defoamer is acceptable for use. See data page 5.99 for details.

Refer to Product Information sheet for additional performance characteristics and properties.

SAFETY PRECAUTIONS

Refer to the MSDS sheet before use.

Published technical data and instructions are subject to change without notice. Contact your Sherwin-Williams representative for additional technical data and instructions.

WARRANTY

The Sherwin-Williams Company warrants our products to be free of manufacturing defects in accord with applicable Sherwin-Williams quality control procedures. Liability for products proven defective, if any, is limited to replacement of the defective product or the refund of the purchase price paid for the defective product as determined by Sherwin-Williams. NO OTHER WARRANTY OR GUARANTEE OF ANY KIND IS MADE BY SHERWIN-WILLIAMS, EXPRESSED OR IMPLIED, STATUTORY, BY OPERATION OF LAW OR OTHERWISE, INCLUDING MERCHANTABILITY AND FITNESS FOR A PARTICULAR PURPOSE.

Submittal Sheet
09250

SHEETROCK™ Sand Finish Paint Additive

Produces a decorative sand texture
— For quick, easy creation of attractive textured walls and ceilings.
— Works in all paints and varnishes.
— Amount added can be varied to customize texture.

Description

SHEETROCK™ Sand Finish Paint Additive is an extremely fine volcanic mineral compound added to paint or varnish to produce a decorative sand texture finish on walls and ceilings. It can also be used to create a non-skid surface around pools and on decks, steps, and ramps. SHEETROCK Sand Finish Paint Additive can be used with any paint or varnish, oil- or latex-based. It remains uniformly distributed throughout the paint, never settling to the bottom.

The addition of 8 oz. (0.22 kg) of additive to one gal. (3.78 L) of paint or varnish reduces normal coverage by approximately 25%.

Directions	**Preparation**	Surface must be structurally sound, dry, clean, and free of scaly paint, wallpaper, wax, dust, and dirt.
	Mixing	Add approximately 8 oz. (0.22 kg) of additive to one gal. (3.78 L) of latex- or oil-based paint to create a medium texture finish on walls, ceilings, or wood surfaces. If a heavier or lighter texture is desired, more or less additive may be used. When using dark paint colors, mix 2-3 hours before painting, and allow to stand. **Note:** When attempting a heavier-than-average finish, test a small area before starting the job. The use of too much additive may cause cracking when paint is dry.
	Application	Apply paint or varnish according to manufacturer's directions, using brush or roller. If desired, a sponge, whisk broom, or other tool may be used on wet paint to further modify the texture.
	Cleanup	Clean all brushes, rollers, and equipment immediately, referring to the instructions provided by the paint or varnish manufacturer.
Product Data	**Packaging**	8 oz. (0.23 kg) plastic tub and 30 oz. (0.85 kg) box.

Submittal Approvals	**Job Name**	
	Contractor	**Date**

NOTE!

FOR GRIT ADD TO CLEAR FLOOR SEALER

USG

WARNING
Spraying mist or dust created from product may cause eye, skin, nose, throat, or respiratory irritation. Avoid inhalation of mist or dust. Wear a NIOSH/MSHA-approved respirator when dusty or misty or if spray applying. Use proper ventilation to reduce mist/dust exposure. Prolonged and repeated exposure to respirable mica may cause lung disease. Wear eye protection. If eye contact occurs, immediately flush thoroughly with water for 15 minutes. If irritation persists, call physician. Wear long-sleeved work clothing to prevent skin irritation. Wash thoroughly with soap and water after use. Do not ingest. If ingested, call physician. Product safety information: (800) 507-8899.
KEEP OUT OF REACH OF CHILDREN.

Trademarks
The following trademark used herein is owned by United States Gypsum Company: SHEETROCK.

Note
Products described here may not be available in all geographic markets. Consult your U.S. Gypsum Company sales office or representative for information.

Notice
We shall not be liable for incidental and consequential damages, directly or indirectly sustained, nor for any loss caused by application of these goods not in accordance with current printed instructions or for other than the intended use. Our liability is expressly limited to replacement of defective goods. Any claim shall be deemed waived unless made in writing to us within thirty (30) days from date it was or reasonably should have been discovered.

Safety First!
Follow good safety and industrial hygiene practices during handling and installing of all products and systems. Take necessary precautions and wear the appropriate personal protective equipment as needed. Read material safety data sheets and related literature on products before specification and/or installation.

United States Gypsum Company

A Subsidiary of UGS Corporation
125 South Franklin Street
P.O. Box 806278
Chicago, IL 60680-4124

Information Service 800 USG.4YOU
http://www.usg.com

J1140/rev. 9-97 ©1997, United States Gypsum Company. Printed in U.S.A.

Protective & Marine Coatings

MACROPOXY® 646 FAST CURE EPOXY

PART A B58-600 SERIES
PART B B58V600 HARDENER

Revised: October 8, 2014

PRODUCT INFORMATION

4.53

PRODUCT DESCRIPTION

MACROPOXY 646 FAST CURE EPOXY is a high solids, high build, fast drying, polyamide epoxy designed to protect steel and concrete in industrial exposures. Ideal for maintenance painting and fabrication shop applications. The high solids content ensures adequate protection of sharp edges, corners, and welds. This product can be applied directly to marginally prepared steel surfaces.

- Low VOC
- Low odor
- Chemical resistant
- Abrasion resistant
- Outstanding application properties
- Meets Class A requirements for Slip Coefficient, 0.36 @ 6 mils / 150 microns dft (Mill White only)

PRODUCT CHARACTERISTICS

Finish:	Semi-Gloss
Color:	Mill White, Black and a wide range of colors available through tinting
Volume Solids:	72% ± 2%, mixed, Mill White
Weight Solids:	85% ± 2%, mixed, Mill White
VOC (EPA Method 24): mixed	Unreduced: <250 g/L; 2.08 lb/gal Reduced 10%: <300 g/L; 2.50 lb/gal
Mix Ratio:	1:1 by volume

Recommended Spreading Rate per coat:

	Minimum	Maximum
Wet mils (microns)	**7.0** (175)	**13.5** (338)
Dry mils (microns)	**5.0*** (125)	**10.0*** (250)
~Coverage sq ft/gal (m^2/L)	**116** (2.8)	**232** (5.7)
Theoretical coverage **sq ft/gal** (m^2/L) @ 1 mil / 25 microns dft	**1152** (28.2)	

***May be applied at 3.0-10.0 mils (75-250 microns) dft as an intermediate coat in a multi-coat system. Refer to Recommended Systems (page 2). See Performance Tips section also.**

NOTE: Brush or roll application may require multiple coats to achieve maximum film thickness and uniformity of appearance.

Drying Schedule @ 7.0 mils wet (175 microns):

	@ 35°F/1.7°C	@ 77°F/25°C 50% RH	@ 100°F/38°C
To touch:	4-5 hours	2 hours	1.5 hours
To handle:	48 hours	8 hours	4.5 hours
To recoat:			
minimum:	48 hours	8 hours	4.5 hours
maximum:	1 year	1 year	1 year
To cure:			
Service:	10 days	7 days	4 days
Immersion:	14 days	7 days	4 days

If maximum recoat time is exceeded, abrade surface before recoating. Drying time is temperature, humidity, and film thickness dependent.
Paint temperature must be at least 40°F (4.5°C) minimum.

Pot Life:	10 hours	4 hours	2 hours
Sweat-in-time:	30 minutes	30 minutes	15 minutes

When used as an intermediate coat as part of a multi-coat system:

Drying Schedule @ 5.0 mils wet (125 microns):

	@ 35°F/1.7°C	@ 77°F/25°C 50% RH	@ 100°F/38°C
To touch:	3 hours	1 hour	1 hour
To handle:	48 hours	4 hours	2 hours
To recoat:			
minimum:	16 hours	4 hours	2 hours
maximum:	1 year	1 year	1 year

PRODUCT CHARACTERISTICS (CONT'D)

Shelf Life:	36 months, unopened Store indoors at 40°F (4.5°C) to 110°F (43°C).
Flash Point:	91°F (33°C), TCC, mixed
Reducer/Clean Up: In California:	Reducer, R7K15 Reducer R7K111 or Oxsol 100

PERFORMANCE CHARACTERISTICS

Substrate*: Steel
Surface Preparation*: SSPC-SP10/NACE 2
System Tested*:
1 ct. Macropoxy 646 Fast Cure @ 6.0 mils (150 microns) dft
*unless otherwise noted below

Test Name	Test Method	Results
Abrasion Resistance	ASTM D4060, CS17 wheel, 1000 cycles, 1 kg load	84 mg loss
Accelerated Weathering-QUV[1]	ASTM D4587, QUV-A, 12,000 hours	Passes
Adhesion	ASTM D4541	1,037 psi
Corrosion Weathering[1]	ASTM D5894, 36 cycles, 12,000 hours	Rating 10 per ASTM D714 for blistering; Rating 9 per ASTM D610 per rusting
Nuclear Decontamination	ASTM D4256/ANSI N 5.12	99% Water Wash; 95% Overall
Direct Impact Resistance[2]	ASTM D2794	120 in. lb.
Dry Heat Resistance	ASTM D2485	250°F (121°C)
Exterior Durability	1 year at 45° South	Excellent, chalks
Flexibility	ASTM D522, 180° bend, 3/4" mandrel	Passes
Fuel Contribution	NFPA 259	5764 btu/lb
Humidity Resistance	ASTM D4585, 6000 hours	No blistering, cracking, or rusting
Immersion	1 year fresh and salt water	Passes, no rusting, blistering, or loss of adhesion
Radiation Tolerance	ASTM D4082 / ANSI 5.12	Pass at 21 mils (525 microns)
Pencil Hardness	ASTM D3363	3H
Salt Fog Resistance[1]	ASTM B117, 6,500 hours	Rating 10 per ASTM D610 for rusting; Rating 9 per ASTM D1654 for corrosion
Slip Coefficient, Mill White*	AISC Specification for Structural Joints Using ASTM A325 or ASTM A490 Bolts	Class A, 0.36
Surface Burning	ASTM E84/NFPA 255	Flame Spread Index 20; Smoke Development Index 35 (at 18 mils or 450 microns)
Water Vapor Permeance	ASTM D1653, Method B	1.16 US perms

Epoxy coatings may darken or discolor following application and curing.

*Refer to Slip Certification document

Footnotes:
[1] *Zinc Clad II Plus Primer*
[2] *Two coats of* Macropoxy 646 Fast Cure Epoxy

DISCLAIMER

The information and recommendations set forth in this Product Data Sheet are based upon tests conducted by or on behalf of The Sherwin-Williams Company. Such information and recommendations set forth herein are subject to change and pertain to the product offered at the time of publication. Consult your Sherwin-Williams representative to obtain the most recent Product Data Information and Application Bulletin.

continued on back

Protective & Marine Coatings

MACROPOXY® 646 FAST CURE EPOXY

PART A B58-600 SERIES
PART B B58V600 HARDENER

Revised: October 8, 2014

PRODUCT INFORMATION

4.53

RECOMMENDED USES

- Marine applications
- Fabrication shops
- Pulp and paper mills
- Power plants
- Offshore platforms
- Nuclear Power Plants
- Nuclear fabrication shops
- Refineries
- Chemical plants
- Tank exteriors
- Water treatment plants
- DOE Nuclear Fuel Facilities
- DOE Nuclear Weapons Facilities
- Mill White and Black are acceptable for immersion use for salt water and fresh water, not acceptable for potable water
- Suitable for use in USDA inspected facilities
- Conforms to AWWA D102 OCS #5
- Conforms to MPI # 108
- This product meets specific design requirements for non-safety related nuclear plant applications in Level II, III and Balance of Plant, and DOE nuclear facilities*.

* Nuclear qualifications are NRC license specific to the facility.

- Suitable for use in the Mining & Minerals Industry

RECOMMENDED SYSTEMS

		Dry Film Thickness / ct. Mils	(Microns)
Immersion and atmospheric:			
Steel:			
2 cts.	Macropoxy 646 Fast Cure Epoxy	5.0-10.0	(125-250)
Concrete/Masonry, smooth:			
2 cts.	Macropoxy 646 Fast Cure Epoxy	5.0-10.0	(125-250)
Concrete Block:			
1 ct.	Kem Cati-Coat HS Epoxy Filler/Sealer *as needed to fill voids and provide a continuous substrate.*	10.0-20.0	(250-500)
2 cts.	Macropoxy 646 Fast Cure Epoxy	5.0-10.0	(125-250)
Atmospheric:			
Steel: (Shop applied system, new construction, AWWA D102, can also be used at 3 mils / 75 microns minimum dft when used as an intermediate coat as part of a multi-coat system)			
1 ct.	Macropoxy 646 Fast Cure Epoxy	3.0-6.0	(75-150)
1-2 cts.	of recommended topcoat		
Steel:			
1 ct.	Recoatable Epoxy Primer	4.0-6.0	(100-150)
2 cts.	Macropoxy 646 Fast Cure Epoxy	5.0-10.0	(125-250)
Steel:			
1 ct.	Macropoxy 646 Fast Cure Epoxy	5.0-10.0	(125-250)
1-2 cts.	Acrolon 218 Polyurethane	3.0-6.0	(75-150)
or	Hi-Solids Polyurethane	3.0-5.0	(75-125)
or	SherThane 2K Urethane	2.0-4.0	(50-100)
or	Hydrogloss	2.0-4.0	(50-100)
Steel:			
2 cts.	Macropoxy 646 Fast Cure Epoxy	5.0-10.0	(125-250)
1-2 cts.	Tile-Clad HS Epoxy	2.5-4.0	(63-100)
Steel:			
1 ct.	Zinc Clad II Plus	2.0-4.0	(50-100)
1 ct.	Macropoxy 646 Fast Cure Epoxy	5.0-10.0	(125-250)
1-2 cts.	Acrolon 218 Polyurethane	3.0-6.0	(75-150)
Steel:			
1 ct.	Zinc Clad III HS	3.0-5.0	(75-125)
or	Zinc Clad IV	3.0-5.0	(75-125)
1 ct.	Macropoxy 646 Fast Cure Epoxy	3.0-10.0	(75-250)
1-2 cts.	Acrolon 218 Polyurethane	3.0-6.0	(75-150)
Aluminum:			
2 cts.	Macropoxy 646 Fast Cure Epoxy	5.0-10.0	(125-250)
Galvanizing:			
2 cts.	Macropoxy 646 Fast Cure Epoxy	5.0-10.0	(125-250)
FIRETEX ONLY:			
Steel & Galvanized Substrates being primed for FIRETEX only:			
1 ct.	Macropoxy 646 Fast Cure Epoxy	2.0-5.0	(50-125)

The systems listed above are representative of the product's use, other systems may be appropriate.

SURFACE PREPARATION

Surface must be clean, dry, and in sound condition. Remove all oil, dust, grease, dirt, loose rust, and other foreign material to ensure adequate adhesion.

Refer to product Application Bulletin for detailed surface preparation information.

Minimum recommended surface preparation:

Iron & Steel
- Atmospheric: SSPC-SP2/3
- Immersion: SSPC-SP10/NACE 2, 2-3 mil (50-75 micron) profile
- Aluminum: SSPC-SP1
- Galvanizing: SSPC-SP1; See Surface Preparations section on page 3 for application of FIRETEX intumescent coating systems

Concrete & Masonry
- Atmospheric: SSPC-SP13/NACE 6, or ICRI No. 310.2R, CSP 1-3
- Immersion: SSPC-SP13/NACE 6-4.3.1 or 4.3.2, or ICRI No. 310.2R, CSP 2-4

Surface Preparation Standards

Condition of Surface		ISO 8501-1 BS7079:A1	Swedish Std. SIS055900	SSPC	NACE
White Metal		Sa 3	Sa 3	SP 5	1
Near White Metal		Sa 2.5	Sa 2.5	SP 10	2
Commercial Blast		Sa 2	Sa 2	SP 6	3
Brush-Off Blast		Sa 1	Sa 1	SP 7	4
Hand Tool Cleaning	Rusted	C St 2	C St 2	SP 2	-
	Pitted & Rusted	D St 2	D St 2	SP 2	-
Power Tool Cleaning	Rusted	C St 3	C St 3	SP 3	-
	Pitted & Rusted	D St 3	D St 3	SP 3	-

TINTING

Tint Part A with Maxitoners at 150% strength. Five minutes minimum mixing on a mechanical shaker is required for complete mixing of color.

Tinting is not recommended for immersion service.

APPLICATION CONDITIONS

Temperature:	35°F (1.7°C) minimum, 120°F (49°C) maximum (air and surface) 40°F (4.5°C) minimum, 120°F (49°C) maximum (material) At least 5°F (2.8°C) above dew point
Relative humidity:	85% maximum

Refer to product Application Bulletin for detailed application information.

ORDERING INFORMATION

Packaging:	
Part A:	1 gallon (3.78L) and 5 gallon (18.9L) containers
Part B:	1 gallon (3.78L) and 5 gallon (18.9L) containers
Weight:	12.9 ± 0.2 lb/gal ; 1.55 Kg/L mixed, may vary by color

SAFETY PRECAUTIONS

Refer to the MSDS sheet before use.

Published technical data and instructions are subject to change without notice. Contact your Sherwin-Williams representative for additional technical data and instructions.

WARRANTY

The Sherwin-Williams Company warrants our products to be free of manufacturing defects in accord with applicable Sherwin-Williams quality control procedures. Liability for products proven defective, if any, is limited to replacement of the defective product or the refund of the purchase price paid for the defective product as determined by Sherwin-Williams. NO OTHER WARRANTY OR GUARANTEE OF ANY KIND IS MADE BY SHERWIN-WILLIAMS, EXPRESSED OR IMPLIED, STATUTORY, BY OPERATION OF LAW OR OTHERWISE, INCLUDING MERCHANTABILITY AND FITNESS FOR A PARTICULAR PURPOSE.

Protective & Marine Coatings

MACROPOXY® 646 FAST CURE EPOXY

PART A B58-600 SERIES
PART B B58V600 HARDENER

Revised: October 8, 2014

APPLICATION BULLETIN

4.53

SURFACE PREPARATIONS

Surface must be clean, dry, and in sound condition. Remove all oil, dust, grease, dirt, loose rust, and other foreign material to ensure adequate adhesion.

Iron & Steel, Atmospheric Service:
Minimum surface preparation is Hand Tool Clean per SSPC-SP2. Remove all oil and grease from surface by Solvent Cleaning per SSPC-SP1. For better performance, use Commercial Blast Cleaning per SSPC-SP6/NACE 3, blast clean all surfaces using a sharp, angular abrasive for optimum surface profile (2 mils / 50 microns). Prime any bare steel within 8 hours or before flash rusting occurs.

Iron & Steel, Immersion Service:
Remove all oil and grease from surface by Solvent Cleaning per SSPC-SP1. Minimum surface preparation is Near White Metal Blast Cleaning per SSPC-SP10/NACE 2. Blast clean all surfaces using a sharp, angular abrasive for optimum surface profile (2-3 mils / 50-75 microns). Remove all weld spatter and round all sharp edges by grinding. Prime any bare steel the same day as it is cleaned.

Aluminum
Remove all oil, grease, dirt, oxide and other foreign material by Solvent Cleaning per SSPC-SP1.

Galvanized Steel
Allow to weather a minimum of six months prior to coating. Solvent Clean per SSPC-SP1 (recommended solvent is VM&P Naphtha). When weathering is not possible, or the surface has been treated with chromates or silicates, first Solvent Clean per SSPC-SP1 and apply a test patch. Allow paint to dry at least one week before testing adhesion. If adhesion is poor, brush blasting per SSPC-SP7 is necessary to remove these treatments. Rusty galvanizing requires a minimum of Hand Tool Cleaning per SSPC-SP2, prime the area the same day as cleaned.
In preparing galvanized steel substrates for the application of FIRETEX intumescent coating systems, Surface Preparation Specification SSPC-SP 16 must be followed obtaining a surface profile of minimum 1.5 mils (38 microns). Optimum surface profile will not exceed 2.0 mils (50 microns).

Concrete and Masonry
For surface preparation, refer to SSPC-SP13/NACE 6, or ICRI No. 310.2R, CSP 1-3. Surfaces should be thoroughly clean and dry. Concrete and mortar must be cured at least 28 days @ 75°F (24°C). Remove all loose mortar and foreign material. Surface must be free of laitance, concrete dust, dirt, form release agents, moisture curing membranes, loose cement and hardeners. Fill bug holes, air pockets and other voids with Steel-Seam FT910.

Concrete, Immersion Service:
For surface preparation, refer to SSPC-SP13/NACE 6, Section 4.3.1 or 1.3.2 or ICRI No. 310.2R, CSP 2-4.

Follow the standard methods listed below when applicable:
ASTM D4258 Standard Practice for Cleaning Concrete.
ASTM D4259 Standard Practice for Abrading Concrete.
ASTM D4260 Standard Practice for Etching Concrete.
ASTM F1869 Standard Test Method for Measuring Moisture Vapor Emission Rate of Concrete.
SSPC-SP 13/Nace 6 Surface Preparation of Concrete.
ICRI No. 310.2R Concrete Surface Preparation.

Previously Painted Surfaces
If in sound condition, clean the surface of all foreign material. Smooth, hard or glossy coatings and surfaces should be dulled by abrading the surface. Apply a test area, allowing paint to dry one week before testing adhesion. If adhesion is poor, or if this product attacks the previous finish, removal of the previous coating may be necessary. If paint is peeling or badly weathered, clean surface to sound substrate and treat as a new surface as above.

Surface Preparation Standards

	Condition of Surface	ISO 8501-1 BS7079:A1	Swedish Std. SIS055900	SSPC	NACE
White Metal		Sa 3	Sa 3	SP 5	1
Near White Metal		Sa 2.5	Sa 2.5	SP 10	2
Commercial Blast		Sa 2	Sa 2	SP 6	3
Brush-Off Blast		Sa 1	Sa 1	SP 7	4
Hand Tool Cleaning	Rusted	C St 2	C St 2	SP 2	-
	Pitted & Rusted	D St 2	D St 2	SP 2	-
Power Tool Cleaning	Rusted	C St 3	C St 3	SP 3	-
	Pitted & Rusted	D St 3	D St 3	SP 3	-

APPLICATION CONDITIONS

Temperature:	35°F (1.7°C) minimum, 120°F (49°C) maximum (air and surface) 40°F (4.5°C) minimum, 120°F (49°C) maximum (material) At least 5°F (2.8°C) above dew point
Relative humidity:	85% maximum

APPLICATION EQUIPMENT

The following is a guide. Changes in pressures and tip sizes may be needed for proper spray characteristics. Always purge spray equipment before use with listed reducer. Any reduction must be compliant with existing VOC regulations and compatible with the existing environmental and application conditions.

Reducer/Clean Up .....Reducer R7K15
In California.....Reducer R7K111

Airless Spray
Pump.....30:1
Pressure.....2800 - 3000 psi
Hose.....1/4" ID
Tip.....017" - .023"
Filter.....60 mesh
Reduction.....As needed up to 10% by volume

Conventional Spray
Gun.....DeVilbiss MBC-510
Fluid Tip.....E
Air Nozzle.....704
Atomization Pressure.....60-65 psi
Fluid Pressure.....10-20 psi
Reduction.....As needed up to 10% by volume
Requires oil and moisture separators

Brush
Brush.....Nylon/Polyester or Natural Bristle
Reduction.....Not recommended

Roller
Cover.....3/8" woven with solvent resistant core
Reduction.....Not recommended.

Plural Component Spray...Acceptable
Refer to April 2010 Technical Bulletin - "Application Guidelines for Macropoxy 646 Fast Cure Epoxy & Recoatable Epoxy Primer Utilizing Plural Component Equipment"
If specific application equipment is not listed above, equivalent equipment may be substituted.

continued on back

Protective & Marine Coatings

MACROPOXY® 646 FAST CURE EPOXY

PART A B58-600 SERIES
PART B B58V600 HARDENER

Revised: October 8, 2014

APPLICATION BULLETIN

4.53

APPLICATION PROCEDURES

Surface preparation must be completed as indicated.

Mix contents of each component thoroughly with low speed power agitation. Make certain no pigment remains on the bottom of the can. Then combine one part by volume of Part A with one part by volume of Part B. Thoroughly agitate the mixture with power agitation. Allow the material to sweat-in as indicated prior to application. Re-stir before using.

If reducer solvent is used, add only after both components have been thoroughly mixed, after sweat-in.

Apply paint at the recommended film thickness and spreading rate as indicated below:

Recommended Spreading Rate per coat:

	Minimum	Maximum
Wet mils (microns)	**7.0** (175)	**13.5** (338)
Dry mils (microns)	**5.0*** (125)	**10.0*** (250)
~Coverage sq ft/gal (m^2/L)	**116** (2.8)	**232** (5.7)
Theoretical coverage **sq ft/gal** (m^2/L) @ 1 mil / 25 microns dft	**1152** (28.2)	

***May be applied at 3.0-10.0 mils (75-250 microns) dft in atmospheric conditions. Refer to Recommended Systems (page 2). See Performance Tips section also.**

NOTE: Brush or roll application may require multiple coats to achieve maximum film thickness and uniformity of appearance.

Drying Schedule @ 7.0 mils wet (175 microns):

	@ 35°F/1.7°C	@ 77°F/25°C *50% RH*	@ 100°F/38°C
To touch:	4-5 hours	2 hours	1.5 hours
To handle:	48 hours	8 hours	4.5 hours
To recoat:			
minimum:	48 hours	8 hours	4.5 hours
maximum:	1 year	1 year	1 year
To cure:			
Service:	10 days	7 days	4 days
Immersion:	14 days	7 days	4 days

If maximum recoat time is exceeded, abrade surface before recoating.

Drying time is temperature, humidity, and film thickness dependent.

Paint temperature must be at least 40°F (4.5°C) minimum.

Pot Life:	10 hours	4 hours	2 hours
Sweat-in-time:	30 minutes	30 minutes	15 minutes

When used as an intermediate coat as part of a multi-coat system:

Drying Schedule @ 5.0 mils wet (125 microns):

	@ 35°F/1.7°C	@ 77°F/25°C *50% RH*	@ 100°F/38°C
To touch:	3 hours	1 hour	1 hour
To handle:	48 hours	4 hours	2 hours
To recoat:			
minimum:	16 hours	4 hours	2 hours
maximum:	1 year	1 year	1 year

Application of coating above maximum or below minimum recommended spreading rate may adversely affect coating performance.

CLEAN UP INSTRUCTIONS

Clean spills and spatters immediately with Reducer R7K15. Clean tools immediately after use with Reducer R7K15. In California use Reducer R7K111. Follow manufacturer's safety recommendations when using any solvent.

PERFORMANCE TIPS

Stripe coat all crevices, welds, and sharp angles to prevent early failure in these areas.

When using spray application, use a 50% overlap with each pass of the gun to avoid holidays, bare areas, and pinholes. If necessary, cross spray at a right angle

Spreading rates are calculated on volume solids and do not include an application loss factor due to surface profile, roughness or porosity of the surface, skill and technique of the applicator, method of application, various surface irregularities, material lost during mixing, spillage, overthinning, climatic conditions, and excessive film build.

Excessive reduction of material can affect film build, appearance, and adhesion.

Do not mix previously catalyzed material with new.

Do not apply the material beyond recommended pot life.

In order to avoid blockage of spray equipment, clean equipment before use or before periods of extended downtime with Reducer R7K15. In California use Reducer R7K111.

Tinting is not recommended for immersion service.

Use only Mill White and Black for immersion service.

Insufficient ventilation, incomplete mixing, miscatalyzation, and external heaters may cause premature yellowing.

Excessive film build, poor ventilation, and cool temperatures may cause solvent entrapment and premature coating failure.

Quik-Kick Epoxy Accelerator is acceptable for use. See data page 4.99 for details.

When coating over aluminum and galvanizing, recommended dft is 2-4 mils (50-100 microns).

Acceptable for Concrete Floors.

Can be used as a metalizing sealer. Consult Technical Bulletin - Sealers for Thermal Spray Metalizing, or your local Sherwin-Williams representative.

Refer to Product Information sheet for additional performance characteristics and properties.

SAFETY PRECAUTIONS

Refer to the MSDS sheet before use.

Published technical data and instructions are subject to change without notice. Contact your Sherwin-Williams representative for additional technical data and instructions.

DISCLAIMER

The information and recommendations set forth in this Product Data Sheet are based upon tests conducted by or on behalf of The Sherwin-Williams Company. Such information and recommendations set forth herein are subject to change and pertain to the product offered at the time of publication. Consult your Sherwin-Williams representative to obtain the most recent Product Data Information and Application Bulletin.

WARRANTY

The Sherwin-Williams Company warrants our products to be free of manufacturing defects in accord with applicable Sherwin-Williams quality control procedures. Liability for products proven defective, if any, is limited to replacement of the defective product or the refund of the purchase price paid for the defective product as determined by Sherwin-Williams. NO OTHER WARRANTY OR GUARANTEE OF ANY KIND IS MADE BY SHERWIN-WILLIAMS, EXPRESSED OR IMPLIED, STATUTORY, BY OPERATION OF LAW OR OTHERWISE, INCLUDING MERCHANTABILITY AND FITNESS FOR A PARTICULAR PURPOSE.

Protective & Marine Coatings

KEM KROMIK® UNIVERSAL METAL PRIMER

B50NZ6	Brown
B50WZ1	Off White
B50AZ6	Gray

Revised 12/11

Product Information

2.11

Product Description

KEM KROMIK UNIVERSAL METAL PRIMER is a rust inhibiting, low VOC, modified phenolic alkyd resin primer designed for use over iron and steel substrates. Can be used as a universal primer under high performance topcoats. Suitable as a barrier coat over conventional coatings which would normally be attacked by strong solvents in high performance coatings.

- High film build to protect sand blasted steel
- Corrosion resistant
- Can be topcoated with epoxies and urethanes
- Low temperature application

Product Characteristics

Finish:	Flat
Color:	Brown (Red Oxide), Off White, Gray
Volume Solids:	53% ± 2%
Weight Solids:	73% ± 2%
VOC (EPA Method 24):	<420 g/L, 3.5 lb/gal

Recommended Spreading Rate per coat:

	Minimum	Maximum
Wet mils (microns)	**6.0** (150)	**8.0** (200)
Dry mils (microns)	**3.0** (75)	**4.0** (100)
~Coverage sq ft/gal (m^2/L)	**212** (5.2)	**283** (7.0)
Theoretical coverage sq ft/gal (m^2/L) @ 1 mil / 25 microns dft	**848** (20.8)	

NOTE: Brush or roll application may require multiple coats to achieve maximum film thickness and uniformity of appearance.

Drying Schedule @ 6.0 mils wet (150 microns):

	@ 40°F/4.5°C	@ 77°F/25°C *50% RH*	@ 110°F/43°C
To touch:	2 hours	30 minutes	15 minutes
To handle:	2.5 hours	1 hour	20 minutes
To recoat:			
itself & alkyds	2.5 hours	1 hour	45 minutes
high performance/ hot solvent topcoats	36 hours	16 hours	16 hours
To cure:	7 days	7 days	7 days

Note: For maximum adhesion, acrylic topcoats require 48 - 72 hours drying of primer.

Drying time is temperature, humidity, and film thickness dependent.

Shelf Life:	36 months, unopened Store indoors at 40°F (4.5°C) to 100°F (38°C).
Flash Point:	80°F (27°C), PMCC
Reducer:	Not recommended
Clean Up:	Xylene R2K4

Recommended Uses

For use over prepared steel.

- Universal primer
- Shopcoat primer
- Barrier coating
- Maintenance primer
- Interior / exterior metal primer
- Structural steel
- Equipment / machinery
- Marine vessels
- Hand rails
- Conforms to AWWA D102, OCS #1
- Suitable for use in USDA inspected facilities
- Conforms to MPI #'s 69, 79, & 95

According to AISC, shop coat primers are intended for protection for only a short period of exposure in ordinary atmospheric conditions, and is considered a temporary and provisional coating.

Not recommended for immersion service or exposure to acids, alkalis, or strong solvents.

Performance Characteristics

Substrate*: Steel

Surface Preparation*: SSPC-SP6

System Tested*:

1 ct. Kem Kromik Universal @ 3.0 mils (75 microns) dft

*unless otherwise noted below

Test Name	Test Method	Results
Abrasion Resistance	ASTM D4060, CS17 wheel, 1000 cycles, 1 kg load	250 mg loss
Adhesion	ASTM D4541	260 psi
Direct Impact Resistance	ASTM D2794	70 in. lbs.
Dry Heat Resistance	ASTM D2485	200°F (93°C)
Flexibility	ASTM D522, 180° bend, 1/4" mandrel	Passes
Moisture Condensation Resistance	ASTM D4585, 100°F (38°C), 500 hours	Good
Pencil Hardness	ASTM D3363	H
Salt Fog Resistance	ASTM B117, 500 hours	Good
Thermal Shock	ASTM D2246, 5 cycles	Passes

Provides performance comparable to products formulated to federal specifications: TT-P-664D.

continued on back

Protective & Marine Coatings

KEM KROMIK® UNIVERSAL METAL PRIMER

B50NZ6 BROWN
B50WZ1 OFF WHITE
B50AZ6 GRAY

PRODUCT INFORMATION

2.11

RECOMMENDED SYSTEMS

		Dry Film Thickness / ct. Mils	(Microns)
Steel, Alkyd Topcoat:			
1 ct.	Kem Kromik Universal Metal Primer	3.0-4.0	(75-100)
1-2 cts.	Industrial Enamel HS	2.0-4.0	(50-100)
or	WB Industrial Enamel	1.5-3.0	(40-75)
or	Steel Spec Fast Dry Alkyd	3.0-5.0	(75-125)
Steel, Aluminum Finish:			
1 ct.	Kem Kromik Universal Metal Primer	3.0-4.0	(75-100)
1-2 cts.	Silver-Brite Aluminum	1.0-1.5	(25-40)
Steel, Acrylic Topcoat:			
1 ct.	Kem Kromik Universal Metal Primer	3.0-4.0	(75-100)
1-2 cts.	DTM Acrylic Coating	2.5-4.0	(63-100)
or	Sher-Cryl HPA	2.5-4.0	(63-100)
Steel, Epoxy Topcoat:			
1 ct.	Kem Kromik Universal Metal Primer	3.0-4.0	(75-100)
1-2 cts.	Tile-Clad HS Epoxy	2.5-4.0	(63-100)
Steel, Polyurethane Topcoat:			
1 ct.	Kem Kromik Universal Metal Primer	3.0-4.0	(75-100)
1-2 cts.	Hi-Solids Polyurethane	3.0-4.0	(75-100)
or	Polylon HP Polyurethane	2.0-3.0	(50-75)
Steel, Silicone Alkyd Topcoat:			
1 ct.	Kem Kromik Universal Metal Primer	3.0-4.0	(75-100)
1-2 cts.	Steel Master 9500	2.5-4.0	(63-100)
Steel, Water Based Epoxy Topcoat:			
1 ct.	Kem Kromik Universal Metal Primer	3.0-4.0	(75-100)
1-2 cts.	Water Based Catalyzed Epoxy	2.5-4.0	(63-100)
or	Waterbased Tile Clad Epoxy	2.0-4.0	(50-100)

The systems listed above are representative of the product's use, other systems may be appropriate.

DISCLAIMER

The information and recommendations set forth in this Product Data Sheet are based upon tests conducted by or on behalf of The Sherwin-Williams Company. Such information and recommendations set forth herein are subject to change and pertain to the product offered at the time of publication. Consult your Sherwin-Williams representative to obtain the most recent Product Data Information and Application Bulletin.

SURFACE PREPARATION

Surface must be clean, dry, and in sound condition. Remove all oil, dust, grease, dirt, loose rust, and other foreign material to ensure adequate adhesion.

Refer to product Application Bulletin for detailed surface preparation information.

Minimum recommended surface preparation:
Iron & Steel: SSPC-SP2

Surface Preparation Standards

Condition of Surface		ISO 8501-1 BS7079:A1	Swedish Std. SIS055900	SSPC	NACE
White Metal		Sa 3	Sa 3	SP 5	1
Near White Metal		Sa 2.5	Sa 2.5	SP 10	2
Commercial Blast		Sa 2	Sa 2	SP 6	3
Brush-Off Blast		Sa 1	Sa 1	SP 7	4
Hand Tool Cleaning	Rusted	C St 2	C St 2	SP 2	-
	Pitted & Rusted	D St 2	D St 2	SP 2	-
Power Tool Cleaning	Rusted	C St 3	C St 3	SP 3	-
	Pitted & Rusted	D St 3	D St 3	SP 3	-

TINTING

Do not tint.

APPLICATION CONDITIONS

Temperature: 40°F (4.5°C) minimum, 120°F (49°C) maximum
(air, surface, and material)
At least 5°F (2.8°C) above dew point

Relative humidity: 85% maximum

Refer to product Application Bulletin for detailed application information.

ORDERING INFORMATION

Packaging: 1 gallon (3.78L) and 5 gallon (18.9L) containers

Weight: 12.5 ± 0.35 lb/gl 1.5 Kg/L

SAFETY PRECAUTIONS

Refer to the MSDS sheet before use.

Published technical data and instructions are subject to change without notice. Contact your Sherwin-Williams representative for additional technical data and instructions.

WARRANTY

The Sherwin-Williams Company warrants our products to be free of manufacturing defects in accord with applicable Sherwin-Williams quality control procedures. Liability for products proven defective, if any, is limited to replacement of the defective product or the refund of the purchase price paid for the defective product as determined by Sherwin-Williams. NO OTHER WARRANTY OR GUARANTEE OF ANY KIND IS MADE BY SHERWIN-WILLIAMS, EXPRESSED OR IMPLIED, STATUTORY, BY OPERATION OF LAW OR OTHERWISE, INCLUDING MERCHANTABILITY AND FITNESS FOR A PARTICULAR PURPOSE.

Protective & Marine Coatings

KEM KROMIK® UNIVERSAL METAL PRIMER

B50NZ6 BROWN
B50WZ1 OFF WHITE
B50AZ6 GRAY

Revised 12/11

APPLICATION BULLETIN

2.11

SURFACE PREPARATIONS

Surface must be clean, dry, and in sound condition. Remove all oil, dust, grease, dirt, loose rust, and other foreign material to ensure adequate adhesion.

Iron & Steel

Minimum surface preparation is Hand Tool Clean per SSPC-SP2. Remove all oil and grease from surface by Solvent Cleaning per SSPC-SP1. For better performance, use Commercial Blast Cleaning per SSPC-SP6/NACE 3, blast clean all surfaces using a sharp, angular abrasive for optimum surface profile (2 mils / 50 microns). Prime any bare steel within 8 hours or before flash rusting occurs.

Previously Painted Surfaces

If in sound condition, clean the surface of all foreign material. Smooth, hard, or glossy coatings and surfaces should be dulled by abrading the surface. Apply a test area, allowing paint to dry one week before testing adhesion. If adhesion is poor, or if this product attacks the previous finish, removal of the previous coating may be necessary. If paint is peeling or badly weathered, clean surface to sound substrate and treat as a new surface as above.

As a "Barrier" Coat:

If it is necessary to topcoat a previously painted surface with chemically resistant or strong solvent topcoats, Kem Kromik Universal Metal Primer can be used as a barrier coat to prevent lifting. Apply a coat of Kem Kromik Universal Metal Primer to a small area to test for adhesion or bleeding. If there is evidence of either poor adhesion or bleeding, clean surface to bare substrate and apply recommended system.

Surface Preparation Standards

	Condition of Surface	ISO 8501-1 BS7079:A1	Swedish Std. SIS055900	SSPC	NACE
White Metal		Sa 3	Sa 3	SP 5	1
Near White Metal		Sa 2.5	Sa 2.5	SP 10	2
Commercial Blast		Sa 2	Sa 2	SP 6	3
Brush-Off Blast		Sa 1	Sa 1	SP 7	4
Hand Tool Cleaning	Rusted	C St 2	C St 2	SP 2	-
	Pitted & Rusted	D St 2	D St 2	SP 2	-
Power Tool Cleaning	Rusted	C St 3	C St 3	SP 3	-
	Pitted & Rusted	D St 3	D St 3	SP 3	-

APPLICATION CONDITIONS

Temperature:	40°F (4.5°C) minimum, 120°F (49°C) maximum (air, surface, and material) At least 5°F (2.8°C) above dew point
Relative humidity:	85% maximum

APPLICATION EQUIPMENT

The following is a guide. Changes in pressures and tip sizes may be needed for proper spray characteristics. Always purge spray equipment before use with listed reducer. Any reduction must be compliant with existing VOC regulations and compatible with the existing environmental and application conditions.

Reducer .....Not recommended

Clean Up .....Xylene, R2K4

Airless Spray

Pressure.....1800-3000 psi
Hose.....1/4" ID
Tip .....015" - .019"
Filter.....60 mesh

Conventional Spray

Gun .....Binks 95
Fluid Nozzle 63C
Air Nozzle.....63PB
Atomization Pressure.....50 psi
Fluid Pressure.....15-20 psi

Brush

Brush.....Natural Bristle

Roller

Cover .....3/8" woven solvent resistant core

If specific application equipment is not listed above, equivalent equipment may be substituted.

continued on back

Protective & Marine Coatings

KEM KROMIK® UNIVERSAL METAL PRIMER

B50NZ6	Brown
B50WZ1	Off White
B50AZ6	Gray

Application Bulletin

2.11

Application Procedures

Surface preparation must be completed as indicated.

Mixing Instructions: Mix paint thoroughly to a uniform consistency with low speed power agitation prior to use.

Apply paint at the recommended film thickness and spreading rate as indicated below:

Recommended Spreading Rate per coat:

	Minimum	Maximum
Wet mils (microns)	**6.0** (150)	**8.0** (200)
Dry mils (microns)	**3.0** (75)	**4.0** (100)
~Coverage sq ft/gal (m^2/L)	**212** (5.2)	**283** (7.0)
Theoretical coverage sq ft/gal (m^2/L) @ 1 mil / 25 microns dft	**848** (20.8)	

NOTE: Brush or roll application may require multiple coats to achieve maximum film thickness and uniformity of appearance.

Drying Schedule @ 6.0 mils wet (150 microns):

	@ 40°F/4.5°C	@ 77°F/25°C *50% RH*	@ 110°F/43°C
To touch:	2 hours	30 minutes	15 minutes
To handle:	2.5 hours	1 hour	20 minutes
To recoat:			
itself & alkyds	2.5 hours	1 hour	45 minutes
high performance/ hot solvent topcoats	36 hours	16 hours	16 hours
To cure:	7 days	7 days	7 days

Note: For maximum adhesion, acrylic topcoats require 48 - 72 hours drying of primer.

Drying time is temperature, humidity, and film thickness dependent.

Application of coating above maximum or below minimum recommended spreading rate may adversely affect coating performance.

Clean Up Instructions

Clean spills and spatters immediately with Xylene, R2K4. Clean tools immediately after use with Xylene, R2K4. Follow manufacturer's safety recommendations when using any solvent.

Disclaimer

The information and recommendations set forth in this Product Data Sheet are based upon tests conducted by or on behalf of The Sherwin-Williams Company. Such information and recommendations set forth herein are subject to change and pertain to the product offered at the time of publication. Consult your Sherwin-Williams representative to obtain the most recent Product Data Information and Application Bulletin.

Performance Tips

Stripe coat all crevices, welds, and sharp angles to prevent early failure in these areas.

When using spray application, use a 50% overlap with each pass of the gun to avoid holidays, bare areas, and pinholes. If necessary, cross spray at a right angle.

Spreading rates are calculated on volume solids and do not include an application loss factor due to surface profile, roughness or porosity of the surface, skill and technique of the applicator, method of application, various surface irregularities, material lost during mixing, spillage, overthinning, climatic conditions, and excessive film build.

No reduction of material is recommended as it can affect film build, appearance, and adhesion.

Intimate contact with the steel surface and primer is necessary for adequate rust inhibition and adhesion.

Refer to Product Information sheet for additional performance characteristics and properties.

Safety Precautions

Refer to the MSDS sheet before use.

Published technical data and instructions are subject to change without notice. Contact your Sherwin-Williams representative for additional technical data and instructions.

Warranty

The Sherwin-Williams Company warrants our products to be free of manufacturing defects in accord with applicable Sherwin-Williams quality control procedures. Liability for products proven defective, if any, is limited to replacement of the defective product or the refund of the purchase price paid for the defective product as determined by Sherwin-Williams. NO OTHER WARRANTY OR GUARANTEE OF ANY KIND IS MADE BY SHERWIN-WILLIAMS, EXPRESSED OR IMPLIED, STATUTORY, BY OPERATION OF LAW OR OTHERWISE, INCLUDING MERCHANTABILITY AND FITNESS FOR A PARTICULAR PURPOSE.

Submittal Review Response

Project: Sand Coulee Water System Replacement

General Contractor: Boland Construction

Contractor's P M: Barry Boland

Response to Transmittal No: #29

Product Description: Danby Premiere Dehumidifier
Supplier or Subcontractor: Sylvane
Date Received: _____

Date Returned: _____

NCI Reviewer: _____

Distribution: ( ) Contractor ( ) Engineer ( ) Owner

General Comments

1. Corrections or comments made on Contractor's Shop Drawings during this review do not relieve the Contractor from compliance with Contract Drawings and Specifications. This submittal has been reviewed, by the Engineer, for conformance with the design concept and general compliance with the Contract Documents only.
2. Contractor is responsible for confirming and correlating all quantities and dimensions; power and other utility requirements; transportation, delivery and scheduling; fabrication processes and techniques; coordinating work with other trades; and satisfactory and safe performance of the work.
3. Contractor is responsible for coordination between all subcontractors and suppliers which may be directly or indirectly involved with this submittal.
4. Contractor's signature, stamp or initials on any page or portion of this submittal is Contractor's certification that he has reviewed the submitted material for conformance with the means, methods, techniques, sequences and operation of construction; and safety precautions and programs incidental thereto, all being the sole responsibility of the Contractor; and is the Contractor's certification that, unless so indicated on the submittal cover page or transmittal, nothing indicated by the information contained in the submittal comprises a deviation from the requirements of the Contract Documents.
5. Contractor is responsible for any and all cost impacts, including costs incurred by the Owner or Engineer, resulting from the submittal and/or Engineer's approval of any substituted material or concept.

Engineer's Response and Required Contractor Action

( ) **No Exceptions Noted -** No further action is required on the part of the Contractor with respect to the submittal process.

( ) **Not Approved -** The product, equipment, material or concept submitted cannot be modified to comply with the requirements of the Contract Documents. Submit data for different product, equipment, material or concept that complies with the requirements.

( ) **Approved as Corrected -** Provide written acknowledgement that the indicated corrections are understood and will be implemented.

( ) **Revise and Resubmit -** Implement the indicated revisions and forward the revised submittal to Engineer for review.

To Buy: Contact Sylvane at 800-934-9194 or visit www.sylvane.com
For Product Support: Contact Danby Customer Care at 800-263-2629

Danby Premiere®

Dehumidifier ~ DDR50A2GP

Features

- 50 U.S. pint (23.7 litre) capacity per 24 hours
- For areas up to 3,000 sq. ft. depending on conditions
- Energy Star® compliant
- Environmentally friendly R410A refrigerant
- Electronic controls
- 2 Fan speeds (High - Low)
- Auto Restart feature
- Low temperature feature allows the system to continue to operate until temperature reaches 5°C
- Auto de-icer prevents ice build-up on coils
- Direct drain feature for continuous operation
- Removable air filter is easy to clean
- Castors for easy portability

Specifications

Dimensions		
Product Width	38.8 cm	15 4/16 "
Product Depth	64.0 cm	12 3/16 "
Product Height	59.8 cm	23 9/16 "
Carton Width	42.0 cm	16 9/16 "
Carton Depth	35.5 cm	14 "
Carton Height	64.0 cm	25 3/16 "
Weight		
Shipping Weight	18.80 Kg	41.40 Lbs.

UPC: 067638905923

Warranty

Warranty Information

24 months parts and labor carry-in service. Installation and/or Yearly Maintenance (cleaning) are not covered under warranty.

Danby Products Limited. PO Box 1778, Guelph, Ontario Canada N1H 2Z9 (519) 837-0920 FAX: (519) 837-0449
Danby Products Inc., PO Box 669, Findlay, OH USA, 45840 (419) 425-8627 FAX: (419) 425-8629

Continuing research results in steady improvement. Therefore, this information and these specifications are subject to change without notice.

To Buy: Contact Sylvane at 800-934-9194 or visit www.sylvane.com
For Product Support: Contact Danby at 800-263-2629

Danby Premiere®

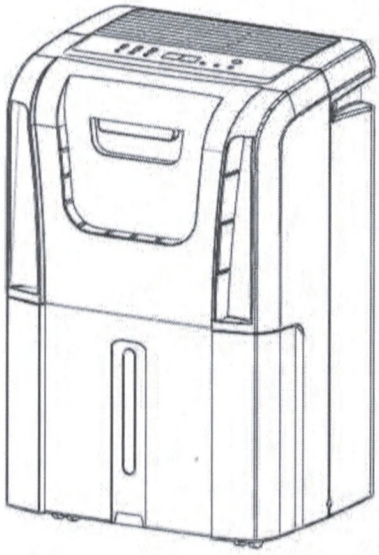

Owner's Use and Care Guide
Guide d'utiliser et soins de Propriètaire

Model • Modèle

DDR50A2GP, DDR60A2GP, DDR70A2GP
DDR60A1CP

CAUTION:
Read and follow all safety rules and operating instructions before first use of this product.

PRÉCAUTION:
Veuillez lire attentivement les consignes de sécurité et les directives d'utilisation avant l'utilisation initiale de ce produit.

PORTABLE DEHUMIDIFIER

Owner's Use and Care Guide ..... **1 - 10**

- Welcome
- Important Safety Information
- Installation Instructions
- Features
- Operating Instructions
- Care and Maintenance
- Troubleshooting
- Warranty

DÉSHUMIDIFICATEUR PORTATIF

Guide d'utilisation et soins de Propriètaire ..... **11 - 20**

- Bienvenue
- Consignes de Sècurité Importante
- Consignes d'installation
- Caractéristiques
- Consignes de Fonctionnement
- Soins et Entretien
- Dépannage
- Garantie

KEEP THESE INSTRUCTIONS FOR FUTURE REFERENCE: If the Dehumidifier changes ownership, be sure this manual accompanies the unit.
CONSERVER CES INSTRUCTIONS POUR CONSULTATION ULTÉRIEURE: En cas de revente du déshumidificateur, ce manuel doit être inclus avec l'appareil.

Danby Products Limited, Guelph, Ontario, Canada N1H 6Z9
Danby Products Inc. Findlay, Ohio, U.S.A.45840

V1.11.12.DM

WELCOME

Thank you for choosing a Danby appliance to provide you and your family with all of the "Home Comfort" requirements of your home, cottage, or office. This Owner's Use and Care Guide will provide you with valuable information neccssary for the proper care and maintenance of your new appliance. If properly maintained, your Danby appliance will give you many years of trouble free operation. Please take a few moments to read the instructions thoroughly and familiarize yourself with all of the operational aspects of this appliance.

This unit can be conveniently moved from room to room within your home and set up in just minutes.

For easy reference, may we suggest you attach a copy of your sales slip/receipt to this page, along with the following information, located on the rear wall of the water tank compartment.

Model Number: _____

Serial Number: _____

Date of Purchase: _____

This information will be necessary if your unit requires servicing and/or for general inquiries.
To contact a Customer Service Representative, call Danby TOLL FREE:

1-800-26- Danby
(1-800-263-2629)

KEEP THESE INSTRUCTIONS FOR FUTURE REFERENCE.

⚠ CAUTION: Do not leave this unit unattended or operate in an area where people or animals may not be able to react quickly. A failed unit may cause over-heating, resulting in personal injury or property damage.

IMPORTANT SAFETY INFORMATION

NOTE

The WARNING instructions issued in this manual are not meant to cover all possible conditions and situations that may occur. It must be understood that common sense, caution, and carefulness are factors that cannot be built into all appliances. These factors must be supplied by the person(s) installing, maintaining, or operating the appliance. Failure to install, maintain, and/or operate the equipment according to the manufacturer's instructions may result in conditions which can produce bodily injury and/or property damage. Contact your dealer, service agent, or the manufacturer about any problems or conditions you do not fully understand.

For Danby Customer Service call **1-800-26-Danby (1-800-263-2629)**

ELECTRICAL REQUIREMENTS

To reduce the risk of fire, elecrric shock, or personal injury, all wiring and grounding must conform with the latest edition of Local and National Electrical codes.

• It is the customer's responsibility to have the wiring and fuses checked by a qualified electrician to make sure adequate electrical power is available.

• This appliance is designed to operate on a separate branch, polarized, three-wire, effectively grounded 120 Volt 60 Hertz (alternating current) circuit protected by a 15 ampere fuse, equivalent fuse or circuit breaker. The three-prong grounding plug on the power cord should be plugged directly into a polarized, three slot, effectively grounded receptacle rated 110/120 V.A.C.

FOR YOUR SAFETY: To reduce the risk of fire or explosion, do not store or use gasoline or other flammable vapors or liquids in the vicinity of this or any other appliance.

GROUNDING INSTRUCTIONS

Improper connection of the equipment-grounding conductor can result in a risk of electrical shock. Check with a qualified electrician or serviceman if you are in doubt as to whether your appliance outlets are properly grounded.

• This appliance must be grounded. In the event of malfunction or breakdown, grounding will reduce the risk of electrical shock by providing a path of least resistance for electrical current. This appliance is equipped with a cord having an equipment-grounding conductor and 3 prong grounding plug. The plug must be connected into an outlet that is properly installed and grounded in accordance with all local codes and ordinances.

• Do not modify the plug provided with this appliance. If it will not fit the outlet, have a proper outlet installed by a qualified electrician.

• If the household electrical supply does not meet the above specifications, or it you are not sure your home has an effective ground, have a qualified electrician or your local electrical utility company check it and correct any problems.

SAVE THESE INSTRUCTIONS!

INSTALLATION INSTRUCTIONS

LOCATION

• Select a suitable location, making sure you have easy access to an electrical outlet (avoid the use of extension cords). If it is absolutely necessary to use an extension cord, use an approved "air conditioner" heavy duty extension cord ONLY (available at most local hardware stores). DIRECT WIRED

• Make sure there are no obstructions restrictiog airflow through the front air intake grill. Maintain a minimum clearance of at least 20 cm (8") between adjacent walls and the back of the unit, to allow for proper air circulation and maximum efficiency. To obtain maximum operating efficiency from your dehumidifier, the recommended (room ambient) operating temperatures should be between 6°C (42.8°F)- 35°C (95°F).

• It is important to remember the efficiency of a dehumidifier will be effected/influenced by the rate at which new humid air (moisture) is allowed to infiltrate the same space/area. To maintain efficiency, the dehumidifier must be operated in an enclosed area. Keep all doors and windows closed.

FEATURES

- Soft touch (Electronic) Control Key Pads
- Auto-Sensing Humidity Control
- Adjustable Humidity Settings (30% - 90%)
- 2 Fan Speed Settings (High / Low)
- Delay Start Protection (Compressor)
- Auto-Defrost (De-Icer)
- Full Bucket Indicator Light
- Easy Roll Castors (4)
- Front Mounted Water Tank (Removable)
- Direct Drain Option
- Quiet Operation
- Removable Air Filter

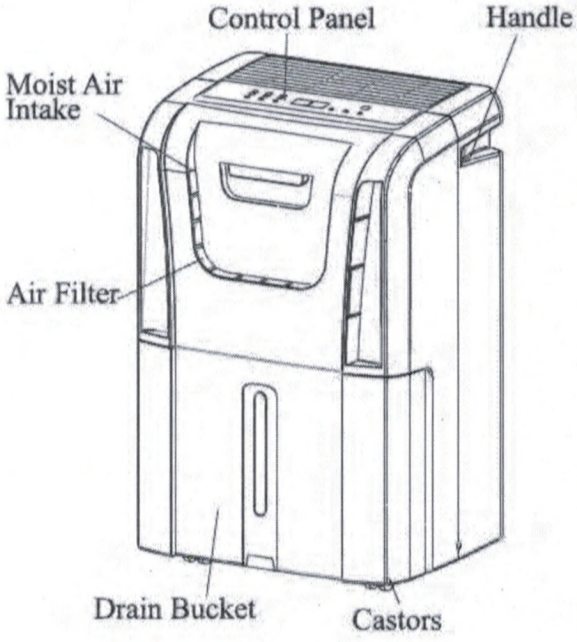

OPERATING INSTRUCTIONS

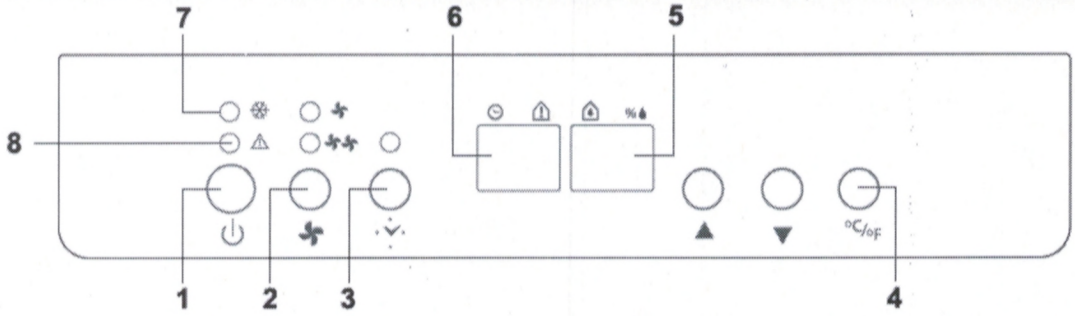

1) POWER Button: On / Off

2) FAN SPEED Button: High / Low

3) TIMER Button: When unit is operating, press TIMER to set number of hours desired until unit will shut off.When unit is in stand-by, press TIMER to set number of hours desired until unit will turn on.

Setting timer from 1-24 hours. To cancel the timer, proceed as above but set the "timer off" to zero (0) hours.

4) °C/°F Button: Press the °C/°F button to toggle between Celsius and Fahrenheit.

5) SET HUMIDITY/CURRENT HUMIDITY DISPLAY: When machine is running, it displays the current humidity. Press UP or DOWN buttons to select humidity setting. The humidity is adjusted in increments of 5% by each press. Adjustable range is within 30% RH to 90% RH. 10 seconds after setting humidity, the display will change back to the current humidity.

6) CURRENT TEMP/ TIMER SET DISPLAY: When machine is running, it displays the current temperature. Press the TIMER button to set the machine to shut off automatically after specified amount of time. 10 seconds after displaying the timer, the display will change back to current tempetauture.

7) DEFROST LIGHT: When temperature is low, unit enters defrost mode and defrost light illuminates.

8) BUCKET FULL LIGHT: When water tank is full, bucket full light illuminates.

OPERATING INSTRUCTIONS (cont'd)

START OPERATION

1) Place the product in an upright position on a flat, stable, and heat-resistant surface. Make sure there is nothing flammable or heat sensitive within 100cm (39 inches). Operating the product in any other position could cause a hazard.

2) Insert the plug into a suitable wall socket. The dehumidifier is suitable for operating on an electricity supply having the same voltage as that showm on its rating label.

3) Make sure the water tank is correctly located. After switching on the machine for the first time, if the "Bucket Full" light illuminates, pull out the water tank and check that the "float" lever is able to move freely, then return the water tank to the correct position (Fig. 1).

Fig. 1

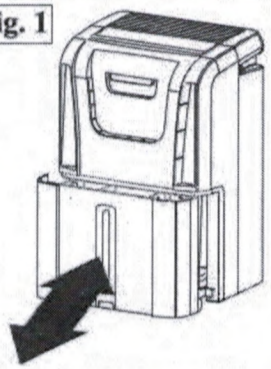

WATER FULL INDICATOR LIGHT (RED)

When the water tank is full and/or incorrectly positioned inside the cabinet, the water full red light turns on and remains on until such time that the tank is emptied and/or correctly re-positioned.

This condition will result in the immediate shut down of the dehumidifying system (both compressor and fan motor operations are terminated). This is a safety feature. When the water tank is emptied and/or correctly re-positioned, the dehumidifier will resume operation automatically.

NOTE: It may take several minutes before operating conditions resume.

BUCKET FULL LIGHT

• When the water tank is full the machine will stop and the"Bucket Full" light will illuminate.

• The water tank should be carefully removed from the machine by sliding it outward from the front of the unit, and it should be emptied. When the empty tank is replaced properly in the machine, the unit will start up and run normally (Fig. 2).

NOTE: Please use both hands to carefully empty the water tank.

Fig. 2

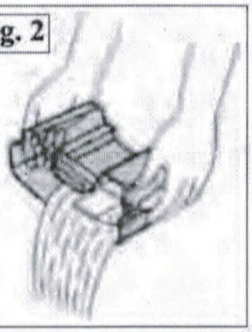

FACTORY DEFAULT SETTING

Each time the unit is disconnected/re-connected and/or in the event of a power failure, the electronic circuitboard automatically defaults to the following factory setting:

Humidity Setting: 60%
Fan Speed: Low

NOTE: In the event of a power failure, all previous settings are automatically erased/cancelled. If your program setting was different from the above (default setting) it will be necessary to re-program your settings.When the unit is switched "Off" manually (using the on/off keypad) the unit will always default to the last program setting that was used.

WATER TANK OPERATION

Proper installation of the water tank is crucial in maintaining reliable dehumidifier operation. The water tank holds accumulated condensed water and, by means of a safety switch, controls both the water level and operation of the dehumidification process.

When the water tank is full and/or accidentally displaced inside the cabinet, the float switch actuator (inside the tank) breaks contact with the safety switch. This condition results in the immediate shut down of the compressor and fan motor system, preventing moisture from being condensed.

NOTE: Never tamper with or attempt to defeat the water level (safety) float switch system.

OPERATING INSTRUCTIONS (cont'd)

DEFROST

When the machine is operated at low temperatures (less than 18°C(64.4°F)), the surface of the evaporator may accumulate a layer of frost which would reduce the efficiency of the machine. When this happens the machine will go into periodic defrost mode. The machine will operate in temperatures down to 5°C(41°F).The time taken to defrost may vary. If the machine freezes up, it should be turned off at the power supply and re-started. If the room temperature remains below 5°C (41°F) the machine should be switched off.

DEHUMIDIFYING

Dehumidifying is a means of removing moisture from the air. A dehumidifier will help to protect your home and valued possessions from damage (swelling) caused by moisture in the air. Essentially a dehumidifier removes moisture from the air as the moist air passes over a dehumidifying (evaporator) coil. Moisture is condensed on the evaporator coil, drained, and collected inside an internal (removable) water tank located at the front of the unit. The exhausted air being returned into the room environment is elevated several degrees, causing the surrounding air temperature to increase (slightly). This process also contributes to lowering the relative humidity of the surrounding air.

DEHUMIDIFYING MODE SELECTION:
1) To turn the unit on, press the ON / OFF button.

2) Press the humidity or buttons to select a desired RH operating value (30%-90%).

FAN SPEED SELECTION: Select a fan speed on the keypad. The speed you select is identified by the (illuminated) indicator light located directly above the selection made.

AIR FILTER

Your dehumidifier features a removable Air Filter. This filter is located at the front of the unit (behind the air intake grill) directly above the water tank compartment. The air filter plays an important role in helping to reduce (minimize) dust/dirt particles from the surrounding environment. A blocked / clogged air filter reduces air intake, impacting negatively on operating efficiency. To maintain maximum operating efficiency, the filter must be checked and cleaned regularly (every 2 weeks). More frequent cleaning may be required depending upon indoor air quality.

IMPORTANT: Never operate the unit without the air filter in place.

AIR FILTER CLEANING STEPS:

1) Pull the air filter out gently (Fig. 3).

2) Clean the filter with a vacuum cleaner, or wash it with clean water and dry with a dry cloth.

3) Put the clean air filter back in place and continue to operate the dehumidifier.

Fig. 3

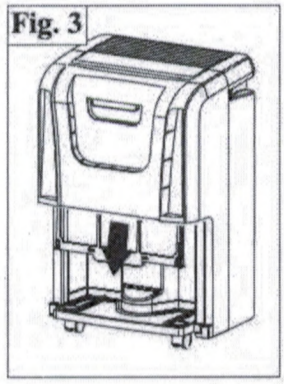

Fig. 4

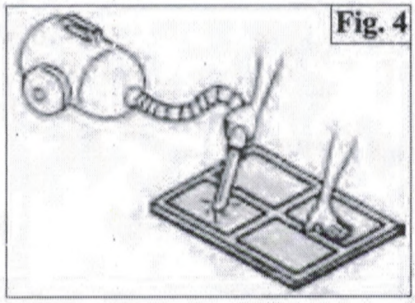

OPERATING INSTRUCTIONS (cont'd)

INSTALLING PVC DRAIN HOSE

When using the continuous drain function, the PVC hose must be placed horizontally below the drainage hole. Avoid uneven ground and folding the hose. **NOTE:** Should you damage or misplace the pvc drain hose, a standard garden hose can be used.

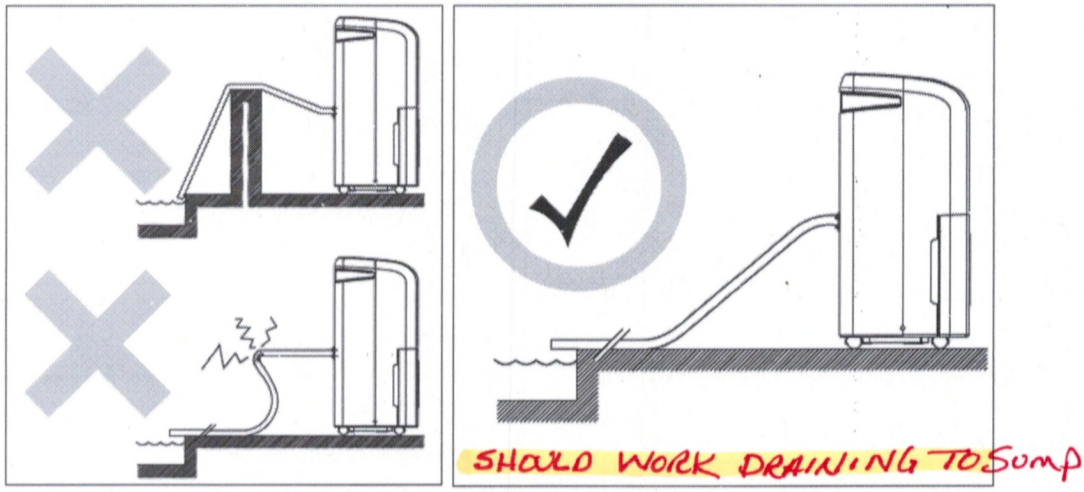

CONTINUOUS DRAIN IDEAL

The function of continuous drain can be performed using the following steps:

1) To save having to periodically empty the water tank, this unit can be configured for continuous drain. You can use the supplied drain hose to connect to the continuous drain connector.

2) Unscrew and remove the drain cover at the rear of the unit (Fig. A).

3) Remove the soft rubber stopper, and place it in the water tank for safe keeping (Fig. B).

4) Insert the drain hose through the hole of the drain cover (Fig. C).

5) Ensure the rubber seal ring is properly seated in the end of the hose as shown in Fig. C.

6) Connect the drain hose to the drain port (Fig. D).

7) Tighten the drain cover in clockwise direction onto the rear of the unit (Fig. D).

8) Place the bucket in its original location (Fig. E).

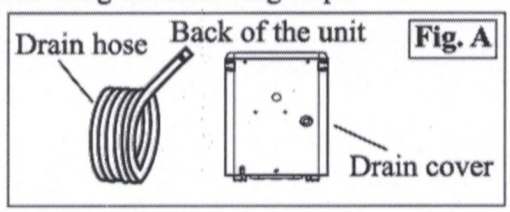

Fig. A

Fig. B

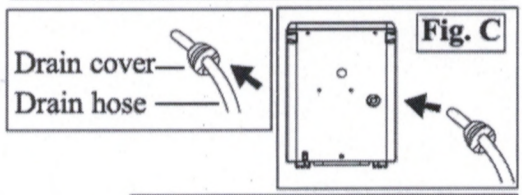

Fig. C

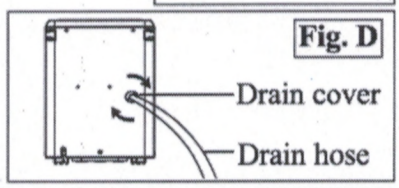

Fig. D

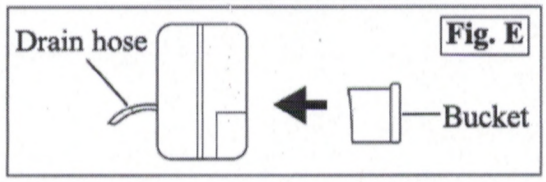

Fig. E

CAUTIONS

1) DO NOT pull on the power cord to avoid breakage, potential danger, or injury.

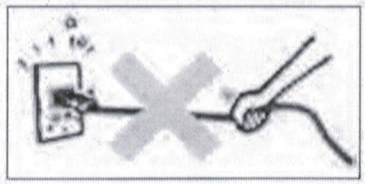

2) DO NOT use insect/oil/paint spray around the machine; these products might cause damage to plastic parts or start a fire.

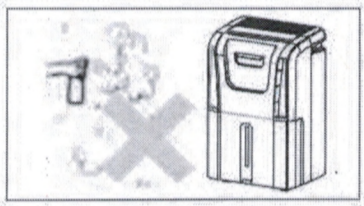

3) DO NOT place the unit on uneven ground to avoid shaking, noise, and water leakage. SET ON SHELF

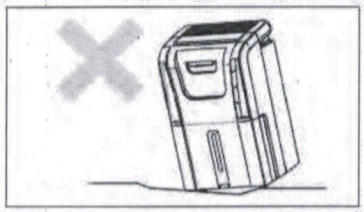

4) Always keep the unit 20cm or more from the wall to dissipate heat properly.

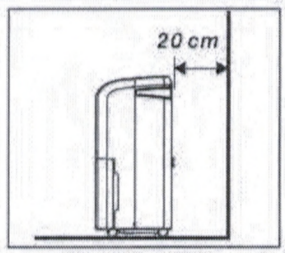

5) DO NOT drop anything into the machine.

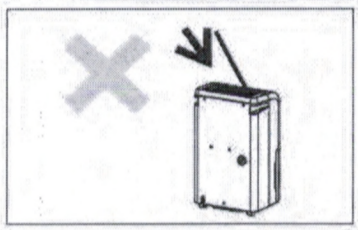

6) Close all windows to allow for the masimum possible efficiency or removal of moisture

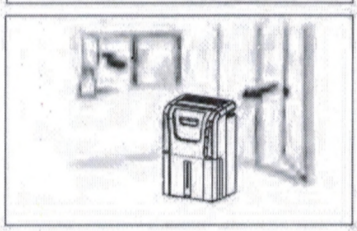

7) Keep the machine away from any type of heat source.

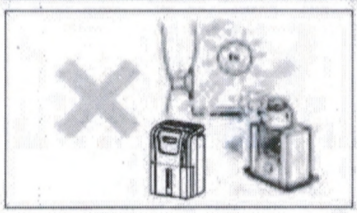

8) When moving or putting in storage, do not place the dehumidifier on its side, or upside down, to avoid shaking.

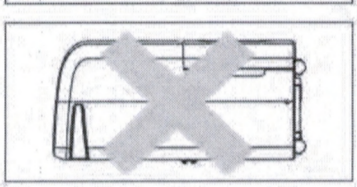

CARE AND MAINTENANCE

CLEANING **CAUTION:** Before attempting to clean and/or service this unit, always disconnect the power supply cord from the electrical supply outlet.

1) DO NOT use gasoline, benezene, paint thinner, or any other chemicals to clean this unit, as these substances will damage/deform both plastic components and luster finish.

2) Never attempt to clean the unit by pouring water directly over any of the surface areas, as this will cause deterioration of electrical components and wiring insulation.

3) Use only a mild dish washing detergent, lukewarm water, and a soft cloth to wipe the exterior surface of the unit and dry thoroughly.

STORAGE When the dehumidifer is not being used for long time periods, please follow these instructions:

1) Disconnect the power cord from the power supply.

2) Empty the water tank and wipe (clean) thoroughly.

3) Clean air filter thoroughly.

4) Re-package the unit in the original carton

5) Store the unit upright in a dry location.

TROUBLESHOOTING

Occasionally, you may encounter some problems that are of a minor nature and a service call may not be necessary. Use this troubleshooting guide to identify possible problems you may be experiencing. If the unit continues to operate improperly, call your local Danby Service Depot or **1-800-26-Danby (1-800-263-2629)**

PROBLEM	POSSIBLE CAUSE
1) Unit will not operate.	• Check power cord connection. • Check electrical outlet for blown fuse. • Check if water tank is full (if yes, empty). • Check water tank is properly installed.
2) Dehumidifying capacity (moisture removal) low.	• Air filter is dirty and/or blocked. • Ambient (room) temperature too low (below 5°C/41°F). • Poor air flow circulation/obstruction of front grill. • Relative humidity in surrounding environment very low.
3) Relative Humidity setting not reached after long period of operation.	• Check all doors and windows are closed. • Area/room is too large for the capacity of the dehumidifier.

Danby Premiere.

LIMITED APPLIANCE WARRANTY

This quality product is warranted to be free from manufacturer's defects in material and workmanship, provided that the unit is used under the normal operating conditions intended by the manufacturer.

This warranty is available only to the person to whom the unit was originally sold by Danby Products Limited (Canada) or Danby Products Inc. (U.S.A.) (hereafter "Danby") or by an authorized distributor of Danby, and is non-transferable.

TERMS OF WARRANTY

Plastic parts, are warranted for thirty (30) days only from purchase date, with no extensions provided.

First 24 Months — During the first twenty four (24) months, any functional parts of this product found to be defective, will be repaired or replaced, at warrantor's option, at no charge to the ORIGINAL purchaser.

To obtain Service — It will be the consumer's responsibility tc transport the appliance (at their own expense) to the original retailer (point of purchase) or a service depot for repair. Contact your dealer from whom your unit was purchased, or contact your nearest authorized Danby service depot, where service must be performed by a qualified service technician.

If service is performed on the unit by anyone other than an authorized service depot, or the unit is used for commercial application, all obligations of Danby under this warranty shall be void.

Nothing within this warranty shall imply that Danby will be responsible or liable for any spoilage or damage to food or other contents of this appliance, whether due to any defect of the appliance, or its use, whether proper or improper.

EXCLUSIONS

Save as herein provided, Danby, there are no other warranties, conditions, representations or guarantees, express or implied, made or intended by Danby or its authorized distributors and all other warranties, conditions, representations or guarantees, including any warranties, conditions, representations or guarantees under any Sale of Goods Act or like legislation or statue is hereby expressly excluded. Save as herein provided, Danby shall not be responsible for any damages to persons or property, including the unit itself, howsoever caused or any consequential damages arising from the malfunction of the unit and by the purchase of the unit, the purchaser does hereby agree to indemnify and hold harmless Danby from any claim for damages to persons or property caused by the unit.

GENERAL PROVISIONS

No warranty or insurance herein contained or set out shall apply when damage or repair is caused by any of the following:

1) Power failure.
2) Damage in transit or when moving the appliance.
3) Improper power supply such as low voltage, defective house wiring or inadequate fuses.
4) Accident, alteration, abuse or misuse of the appliance such as inadequate air circulation in the room or abnormal operating conditions (extremely high or low room temperature).
5) Use for commercial or industrial purposes (ie. If the appliance is not installed in a domestic residence).
6) Fire, water damage, theft, war, riot, hostility, acts of God such as hurricanes, floods etc.
7) Service calls resulting in customer education.
8) Improper Installation (ie. Building-in of a free standing appliance or using an appliance outdoors that is not approved for outdoor application).

Proof of purchase date will be required for warranty claims; so, please retain bill of sale. In the event warranty service is required, present this document to our AUTHORIZED SERVICE DEPOT.

Warranty Service
Carry-In

Danby Products Limited
PO Box 1778, Guelph, Ontario, Canada N1H 6Z9
Telephone: (519) 837-0920 FAX: (519) 837-0449

1-800-263-2629

Danby Products Inc.
PO Box 669, Findlay, Ohio, U.S.A. 45840
Telephone: (419) 425-8627 FAX: (419) 425-8629

04/09

Submittal Review Response

Project: Sand Coulee Water System Replacement

General Contractor: Boland Construction

Contractor's P M: Barry Boland

Response to Transmittal No: #30

Product Description: 6" Cast Aluminum Lettering
Supplier or Subcontractor: Double G Engraving & Awards
Date Received: _____

Date Returned: _____

NCI Reviewer: _____

Distribution: ( ) Contractor ( ) Engineer ( ) Owner

General Comments

1. Corrections or comments made on Contractor's Shop Drawings during this review do not relieve the Contractor from compliance with Contract Drawings and Specifications. This submittal has been reviewed, by the Engineer, for conformance with the design concept and general compliance with the Contract Documents only.
2. Contractor is responsible for confirming and correlating all quantities and dimensions; power and other utility requirements; transportation, delivery and scheduling; fabrication processes and techniques; coordinating work with other trades; and satisfactory and safe performance of the work.
3. Contractor is responsible for coordination between all subcontractors and suppliers which may be directly or indirectly involved with this submittal.
4. Contractor's signature, stamp or initials on any page or portion of this submittal is Contractor's certification that he has reviewed the submitted material for conformance with the means, methods, techniques, sequences and operation of construction; and safety precautions and programs incidental thereto, all being the sole responsibility of the Contractor; and is the Contractor's certification that, unless so indicated on the submittal cover page or transmittal, nothing indicated by the information contained in the submittal comprises a deviation from the requirements of the Contract Documents.
5. Contractor is responsible for any and all cost impacts, including costs incurred by the Owner or Engineer, resulting from the submittal and/or Engineer's approval of any substituted material or concept.

Engineer's Response and Required Contractor Action

( ) **No Exceptions Noted -** No further action is required on the part of the Contractor with respect to the submittal process.

( ) **Not Approved -** The product, equipment, material or concept submitted cannot be modified to comply with the requirements of the Contract Documents. Submit data for different product, equipment, material or concept that complies with the requirements.

( ) **Approved as Corrected -** Provide written acknowledgement that the indicated corrections are understood and will be implemented.

( ) **Revise and Resubmit -** Implement the indicated revisions and forward the revised submittal to Engineer for review.

Scott Karaffa

From: spencer@dblgengraving.com
Sent: Tuesday, April 14, 2015 3:27 PM
To: scott@bolandconstruction.net
Subject: Well house
Attachments: aluminum cast letter mount diagram.pdf

please see attached.

Thank you,

Spencer Williams

DOUBLE G
ENGRAVING & AWARDS
doublegengraving.com 612 2nd St. S. Great Falls, MT

Double G Engraving & Awards
612 2nd St. South
Great Falls, MT 59405
406-452-0615 fax:453-0772
www.doublegengraving.com
http://doublegengraving.espwebsite.com/
ASI 182549
~quotes are good for 30 days~

NOTE!
LETTERING WILL READ: SAND COULEE WELL HOUSE
: AS PER WEST ELEVATION DETAIL ON SHT. P-3

SPENCER WILL INSTALL USING A TEMPLATE TO GET STUDS INTO BRICK

Scott Karaffa

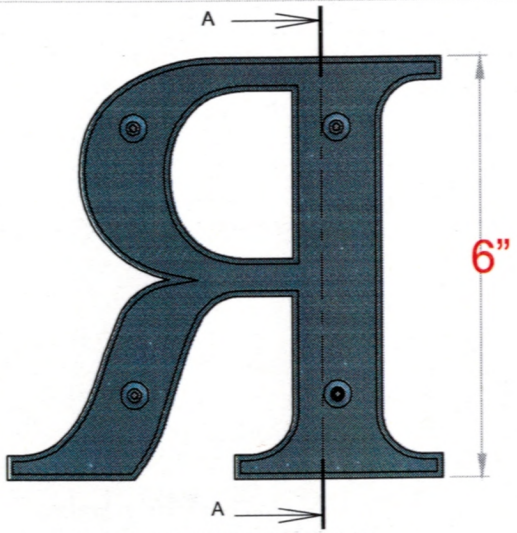

BACK VIEW II SCALE 1:5

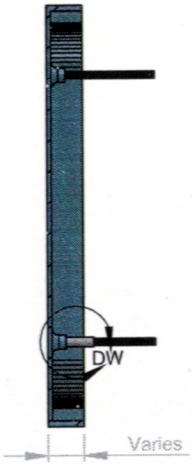

SECTION VIEW A-A II SCALE 1:5

NOTE:
Styles with thin strokes or small letters may be cast solid

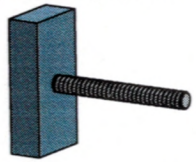

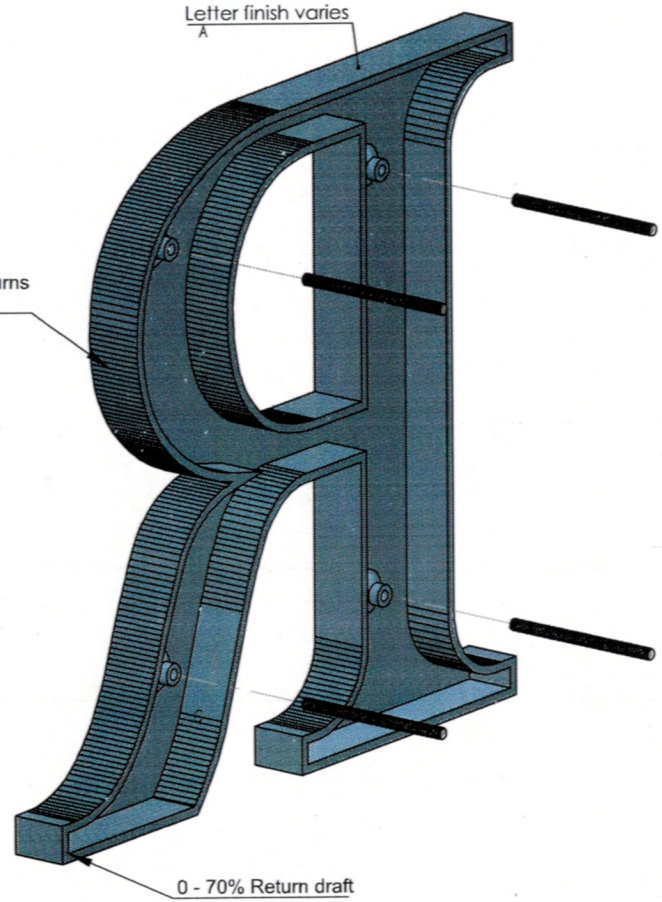

ISOMETRIC BACK VIEW II SCALE 1:3

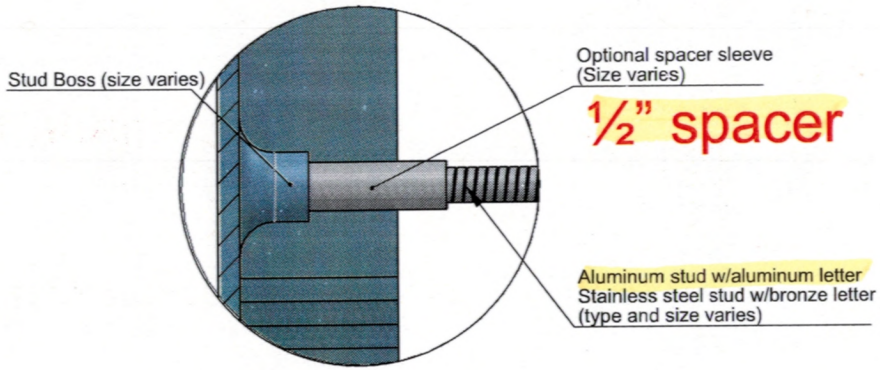

DETAIL DW II SCALE 1:1

SIZE	MIN STUDS/LTR
Up to 3"	3 studs
over 3" - 15"	4 studs
Over 15"	6 studs
Punctuation	2 studs

NOTES:
Typical stud length 2" beyond back of letter
Letters under 15" high - 10/24 studs, 15"+ high - 1/4-20 studs.
Less than 3/8" stroke, 6-32 or 4-40 studs
Standard cast studs are in line for brick mortar (2-5/8" on center for mortar)

SPENCER WILLIAMS
DOUBLE G
ENGRAVING & AWARDS
doublegengraving.com 612 2nd St. S. Great Falls, MT
406-452-0615 fax 453-0772
ASI 182549

TITLE: CAST METAL STUD MOUNT

MATERIAL: ALUMINUM

PRODUCT TYPE: CAST METAL

DWG NO. CAST10 | REV 11/19/14 | SCALE: AS INDICATED | SHEET 1 OF 1

THE LETTERING STYLE JAKE APPROVED IS HELVETICA FONT

Submittal Review Response

Project: Sand Coulee Water System Replacement

General Contractor: Boland Construction

Contractor's P M: Barry Boland

Response to Transmittal No: #31
Product Description: Seed Certifications
Supplier or Subcontractor: Treasure State Seed
Date Received: _____

Date Returned: _____

NCI Reviewer: _____

Distribution: ( ) Contractor ( ) Engineer ( ) Owner

General Comments

1. Corrections or comments made on Contractor's Shop Drawings during this review do not relieve the Contractor from compliance with Contract Drawings and Specifications. This submittal has been reviewed, by the Engineer, for conformance with the design concept and general compliance with the Contract Documents only.
2. Contractor is responsible for confirming and correlating all quantities and dimensions; power and other utility requirements; transportation, delivery and scheduling; fabrication processes and techniques; coordinating work with other trades; and satisfactory and safe performance of the work.
3. Contractor is responsible for coordination between all subcontractors and suppliers which may be directly or indirectly involved with this submittal.
4. Contractor's signature, stamp or initials on any page or portion of this submittal is Contractor's certification that he has reviewed the submitted material for conformance with the means, methods, techniques, sequences and operation of construction; and safety precautions and programs incidental thereto, all being the sole responsibility of the Contractor; and is the Contractor's certification that, unless so indicated on the submittal cover page or transmittal, nothing indicated by the information contained in the submittal comprises a deviation from the requirements of the Contract Documents.
5. Contractor is responsible for any and all cost impacts, including costs incurred by the Owner or Engineer, resulting from the submittal and/or Engineer's approval of any substituted material or concept.

Engineer's Response and Required Contractor Action

( ) **No Exceptions Noted** - No further action is required on the part of the Contractor with respect to the submittal process.

( ) **Not Approved** - The product, equipment, material or concept submitted cannot be modified to comply with the requirements of the Contract Documents. Submit data for different product, equipment, material or concept that complies with the requirements.

( ) **Approved as Corrected** - Provide written acknowledgement that the indicated corrections are understood and will be implemented.

( ) **Revise and Resubmit** - Implement the indicated revisions and forward the revised submittal to Engineer for review.

Treasure State Seed

PO Box 698 Fairfield, Montana 59436
Phone: (406)467-2557 Toll Free: 800-572-4769 Fax: (406)467-3377

Seed Certification

Ed Boland Construction	Date	04/20/15
4701 North Star Boulevard	Phone	406-761-1063
Great Falls, MT 59405	Fax:	406-761-1076

This letter is to certify that the seed provided by Treasure State Seed, Inc. for the below listed project has been tested by an approved seed lab, and meets State of Montana and Federal seed laws in regard to pure seed, weed seed content, and germination.

PROJECT NAME	*Sand Coulee Water Project*		
Dryland Slope			
		POUNDS	
VARIETY	LOT NUMBER	P.L.S. #	BULK#
Fairway Crested Wheatgrass	1277-9-188875	80.00	84.00
Hard Fescue	M31-14-1HENA	60.00	62.00
Slender Wheatgrass	1277-9-148493	30.00	35.00
Sodar Streambank Wheatgrass	1676.2371	30.00	35.00
	TOTALS #	200.00	216.00
COMMENTS:			

Scott Kuffa

FAIRWAY CRESTED WHEATGRASS

LOT NO: 1277-9-188875

PURITY	98.26	GERM:	97
CROP	0.24	HARD SEED	0
WEED	0.44	TOTAL:	97
NOXIOUS	0 FOUND	TESTED:	8/27/2014
INERT	1.06	NET WT	50 #
		ORIGIN	CAN

PRYOR SLENDER WHEATGRASS

LOT NO: 1277-9-148493

PURITY	93.57	GERM:	38
CROP	0.26	HARD SEED	56
WEED	0.31	TOTAL:	94
NOXIOUS	0 FOUND	TESTED:	8/15/2014
INERT	5.86	NET WT	50 #
		ORIGIN	CAN

HARD FESCUE

LOT NO: M31-14-1HENA

PURITY	99.64	GERM:	98
CROP	0.00	HARD SEED	0
WEED	0.07	TOTAL:	98
NOXIOUS	0 FOUND	TESTED:	8/25/2014
INERT	0.29	NET WT	50 #
		ORIGIN	OR

SODAR STREAMBANK WHEATGRASS

LOT NO: 1676.2371

PURITY	96.78	GERM:	89
CROP	0.17	HARD SEED	0
WEED	0.10	TOTAL:	89
NOXIOUS	0 FOUND	TESTED:	2/20/2015
INERT	2.95	NET WT	50 #
		ORIGIN	WA

Submittal Review Response

Project: Sand Coulee Water System Replacement

General Contractor: Boland Construction

Contractor's P M: Barry Boland

NCI Engineering

Response to Transmittal No: #32
Product Description: Sod Certifications
Supplier or Subcontractor: Selstads Sod Farms

Date Received: _____
Date Returned: _____

NCI Reviewer: _____

Distribution: ( ) Contractor ( ) Engineer ( ) Owner

General Comments

1. Corrections or comments made on Contractor's Shop Drawings during this review do not relieve the Contractor from compliance with Contract Drawings and Specifications. This submittal has been reviewed, by the Engineer, for conformance with the design concept and general compliance with the Contract Documents only.
2. Contractor is responsible for confirming and correlating all quantities and dimensions; power and other utility requirements; transportation, delivery and scheduling; fabrication processes and techniques; coordinating work with other trades; and satisfactory and safe performance of the work.
3. Contractor is responsible for coordination between all subcontractors and suppliers which may be directly or indirectly involved with this submittal.
4. Contractor's signature, stamp or initials on any page or portion of this submittal is Contractor's certification that he has reviewed the submitted material for conformance with the means, methods, techniques, sequences and operation of construction; and safety precautions and programs incidental thereto, all being the sole responsibility of the Contractor; and is the Contractor's certification that, unless so indicated on the submittal cover page or transmittal, nothing indicated by the information contained in the submittal comprises a deviation from the requirements of the Contract Documents.
5. Contractor is responsible for any and all cost impacts, including costs incurred by the Owner or Engineer, resulting from the submittal and/or Engineer's approval of any substituted material or concept.

Engineer's Response and Required Contractor Action

( ) **No Exceptions Noted -** No further action is required on the part of the Contractor with respect to the submittal process.

( ) **Not Approved -** The product, equipment, material or concept submitted cannot be modified to comply with the requirements of the Contract Documents. Submit data for different product, equipment, material or concept that complies with the requirements.

( ) **Approved as Corrected -** Provide written acknowledgement that the indicated corrections are understood and will be implemented.

( ) **Revise and Resubmit -** Implement the indicated revisions and forward the revised submittal to Engineer for review.

SELSTADS SOD FARMS™
3012 Vaughn Road
Great Falls, MT 59404
452-6425
Toll Free. Out of Town: 1-800-624-5590

April 22, 2015

Ed Bolin Construction

Great Falls MT 59405

SEED BLEND FOR SOD

All seed used in our sod blend is Kentucky Bluegrass, "Sod Certified" this is one grade Superior to "Certified Seed."

Award 20%
Nuglade 20%
Quantum 20%
Rambo 20%
Nustar 20%

These are all "Elite" Newer Cultivars of Kentucky Bluegrass. From time to time new cultivars are developed so we may add or substitute one or more of these with an improved cultivar to provide an even better sod.

Sincerely,

Dolores Kreger

Dolores Kreger
Office Manager

SELSTADS
SOD FARMS
TM 3012 Vaughn Road
Great Falls, MT 59404
452-6425
Toll Free. Out of Town: 1-800-624-5590

April 22, 2015

Ed Bolin Construction

Great Falls MT 59404

FERTILIZER BLEND FOR SOD

Fertilizer for sod establishment is a high phosphorous fertilizer for root development, Apply 5lbs per 1,000 square feet. Mixture is as follows:

15-35-10

16.5% OF 46-0-0 UREA
67% OF 11-52-0 PHOSPHATE
16.5% OF 0-0-60 POTASH

15% Nitrogen
35% Phosphate P205 Equivalent
10% Potassium K20 Equivalent

ED BOLAND Construction inc.

4701 North Star Blvd., Great Falls, MT 59405
Ph: 406-761-1063 Fax: 406-761-1076
email: office@bolandconstruction.net

May 5, 2015

Ralph,

This is the submittal for the Top Soil (Blended) that we looked at this morning at Dave Dickman's residence in Gibson Flats. It is a blended top soil from his gravel pit area with manure and humus mixed in through a Roto-Mill. You have the sample in your office. (gray bucket) This material will be used as a 3" base for the sod that is being imported in for repairs to grass areas disturbed during installation of water lines and services.

Thank you!

Submittal Review Response

Project: Sand Coulee Water System Replacement

General Contractor: Boland Construction

Contractor's P M: Barry Boland

Response to Transmittal No: #33 (re-submittal)

Product Description: Blended Top Soil
Supplier or Subcontractor: Dave Dickman Excavation
Date Received: _____

Date Returned: _____

NCI Reviewer: _____

Distribution: ( ) Contractor ( ) Engineer ( ) Owner

General Comments

1. Corrections or comments made on Contractor's Shop Drawings during this review do not relieve the Contractor from compliance with Contract Drawings and Specifications. This submittal has been reviewed, by the Engineer, for conformance with the design concept and general compliance with the Contract Documents only.
2. Contractor is responsible for confirming and correlating all quantities and dimensions; power and other utility requirements; transportation, delivery and scheduling; fabrication processes and techniques; coordinating work with other trades; and satisfactory and safe performance of the work.
3. Contractor is responsible for coordination between all subcontractors and suppliers which may be directly or indirectly involved with this submittal.
4. Contractor's signature, stamp or initials on any page or portion of this submittal is Contractor's certification that he has reviewed the submitted material for conformance with the means, methods, techniques, sequences and operation of construction; and safety precautions and programs incidental thereto, all being the sole responsibility of the Contractor; and is the Contractor's certification that, unless so indicated on the submittal cover page or transmittal, nothing indicated by the information contained in the submittal comprises a deviation from the requirements of the Contract Documents.
5. Contractor is responsible for any and all cost impacts, including costs incurred by the Owner or Engineer, resulting from the submittal and/or Engineer's approval of any substituted material or concept.

Engineer's Response and Required Contractor Action

( ) **No Exceptions Noted** - No further action is required on the part of the Contractor with respect to the submittal process.

( ) **Not Approved** - The product, equipment, material or concept submitted cannot be modified to comply with the requirements of the Contract Documents. Submit data for different product, equipment, material or concept that complies with the requirements.

( ) **Approved as Corrected** - Provide written acknowledgement that the indicated corrections are understood and will be implemented.

( ) **Revise and Resubmit** - Implement the indicated revisions and forward the revised submittal to Engineer for review.

Dickman
EXCAVATION SAND & GRAVEL
130 GIBSON FLATS RD. GREAT FALLS, MT 59405 (406) 761-6785 FAX 761-7044

May 4, 2015

Boland Construction
Attn: Scott

RE: Top Soil For Sand Coulee Water Project

Our top soil source is located at 364 Fields Road, approximately 4 miles from Sand Coulee.
We use it for reclamation and seed dry land hay grass.
You may look at it, we just seeded 10 days ago and it is coming up already.

Dave Dickman

Dickman Excavation

Submittal Review Response

Project: Sand Coulee Water System Replacement

General Contractor: Boland Construction

Contractor's P M: Barry Boland

NCI Engineering

Response to Transmittal No: #34

Product Description: 4" Wall Base for Well House
Supplier or Subcontractor: T & A Supply
Date Received: _____

Date Returned: _____

NCI Reviewer: _____

Distribution: ( ) Contractor ( ) Engineer ( ) Owner

General Comments

1. Corrections or comments made on Contractor's Shop Drawings during this review do not relieve the Contractor from compliance with Contract Drawings and Specifications. This submittal has been reviewed, by the Engineer, for conformance with the design concept and general compliance with the Contract Documents only.
2. Contractor is responsible for confirming and correlating all quantities and dimensions; power and other utility requirements; transportation, delivery and scheduling; fabrication processes and techniques; coordinating work with other trades; and satisfactory and safe performance of the work.
3. Contractor is responsible for coordination between all subcontractors and suppliers which may be directly or indirectly involved with this submittal.
4. Contractor's signature, stamp or initials on any page or portion of this submittal is Contractor's certification that he has reviewed the submitted material for conformance with the means, methods, techniques, sequences and operation of construction; and safety precautions and programs incidental thereto, all being the sole responsibility of the Contractor; and is the Contractor's certification that, unless so indicated on the submittal cover page or transmittal, nothing indicated by the information contained in the submittal comprises a deviation from the requirements of the Contract Documents.
5. Contractor is responsible for any and all cost impacts, including costs incurred by the Owner or Engineer, resulting from the submittal and/or Engineer's approval of any substituted material or concept.

Engineer's Response and Required Contractor Action

( ) **No Exceptions Noted** - No further action is required on the part of the Contractor with respect to the submittal process.

( ) **Not Approved** - The product, equipment, material or concept submitted cannot be modified to comply with the requirements of the Contract Documents. Submit data for different product, equipment, material or concept that complies with the requirements.

( ) **Approved as Corrected** - Provide written acknowledgement that the indicated corrections are understood and will be implemented.

( ) **Revise and Resubmit** - Implement the indicated revisions and forward the revised submittal to Engineer for review.

Johnsonite®
A Tarkett Company

Product Specification Section 096513

Traditional & Perceptions™ Wall Base

1. PROPRIETARY PRODUCT/MANUFACTURER

1.1. **Proprietary Product:** Thermoplastic Wall Base

1.2. **Manufacturer:**

Johnsonite, Inc.	Phone	(800) 899-8916
16910 Munn Road		(440) 543-8916
Chagrin Falls, Ohio 44023	Tech:	Ext 9297
Web: www.johnsonite.com	Samples:	Ext 9299
Email: info@johnsonite.com	Fax:	(440) 543-8920

1.3. **Proprietary Product Description:**

1.3.1. **Construction:** Johnsonite Traditional Wall Base is manufactured from a proprietary rubber formulation designed specifically to meet the performance and dimensional requirements of ASTM F-1861, Type TV and TP, Group 1 (solid), Style A and B, Standard Specification for Resilient Wall Base.

1.3.2. **Physical Characteristics:**

No Rubber Wall Base

- **Traditional**: DC-XX with toe (coved) or DCT-XX for toeless (straight), 0.125" (3.17 mm) thickness, 2-1/2" (6.35 cm), 4" (10.16 cm), 4 1/2" (11.4 cm) or 6" (15.24 cm) height

  Available in 4' (1.22 m) straight lengths and 120' (36.58 m) coiled lengths. The 6" (15.24 cm) high profile available in 4' (1.22 m) straight lengths and 100' (30.48 m) coiled lengths

- **Wall Art**: WA-XX w/toe (coved), 0.125" (3.17 mm) thickness, 4" (10.16 cm) height

  Available in 4' (1.22 m) straight lengths only

- **Inside and Outside Corners** available with 4" (10.16 cm) returns packaged 25 per carton, add LIC (Inside corners) or LOC (Outside corners)

Yes Vinyl Wall Base

- **Traditional**: CB-XX with toe (coved) or CBT-XX toeless (straight), 0.125" (3.17 mm) or 0.080" thickness, 2-1/2" (6.35 cm), 4" (10.16 cm), or 6" (15.24 cm) height

  Cartons size: Available in 4' (1.22 m) straight lengths and 120' (36.58 m) coiled lengths. The 6" (15.24 cm) high profile available in 4' (1.22 m) straight lengths and 100' (30.48 m) coiled lengths

- **Inside and Outside Corners** available with 4" (10.16 cm) returns packaged 25 per carton, add LIC (Inside corners) or LOC (Outside corners)

Perceptions™ Rubber Wall Base

- **Recess** (RWDC with angled toe or RWDCT for straight): 0.125" (3.17 mm) thickness, 4-1/4" (10.8 cm) height, available in 120' (36.58 m) coiled lengths (or special order 4' straight lengths)
- **Royale** (RWDC-XX-E): 0.125" (3.17 mm) thickness, 4-1/4" (10.8 cm) height, 120' (36.58 m) coiled lengths (or special order 4' straight lengths).
- **Flex** (RWDC-XX-F): 0125" (3.17 mm) thickness, 4-1/4" (10.8 cm) height, 120' (36.58 m) coiled lengths (or special order 4' straight lengths)
- **Contour** (RWDC-XX-G): 0125" (3.17 mm) thickness, 4-1/4" (10.8 cm) height, 120' (36.58 m) coiled lengths (or special order 4' straight lengths)
- **Inside and Outside Corners** available with 4" (10.16 cm) returns packaged 25 per carton, add LIC (Inside corners) or LOC (Outside corners)

2. PRODUCT PERFORMANCE AND TECHNICAL DATA

- Meets or exceeds the performance requirements for resistance to heat/light aging, chemicals, and dimensional stability when tested to the methods, as described, in ASTM F-1861.
- **Flexibility**: Will not crack, break, or show any signs of fatigue when bent around a 1/4" (6.4 mm) diameter cylinder.
- **Chemical resistance** (ASTM F 925): Passes – 5% acetic acid, 70% isopropyl alcohol, mineral oil, 5% sodium hydroxide solution, 5% hydrochloric acid solution, 5% sulfuric acid solution, 5% household ammonia solution, and 5.25% household bleach solution
- **Resistance to light** (ASTM F 1515): $\Delta E < 8$
- **Fire Resistance:**

  Vinyl Wall Base
  ASTM E 84/NFPA 255 (Flame/Smoke) – Class B, < 450
  ASTM E 648 (NFPA 253): Critical Radiant Flux – Class I

  Rubber Wall Base
  ASTM E 84/NFPA 255 (Flame/Smoke) – Class A, < 450
  ASTM E 648 (NFPA 253): Critical Radiant Flux – Class I

3. INSTALLATION

Johnsonite Wall Base and adhesives must be site conditioned at room temperature for a minimum of 48 hours prior to, during, and after installation. Room temperature must be maintained between 65° and 85°F (18° and 30°C) with HVAC system operating. A minimum temperature of 55°F (13°C) must be maintained afterwards. The ambient relative humidity should be between 40% and 60%.

Scott Kawa

All walls must be clean, smooth, flat and dry. The surface must be free of all dust, loose particles, solvents, paint, grease, oil, wax, alkali, sealing/curing compounds, old adhesive, and any other foreign material, which could affect installation. Remove existing adhesive mechanically – do not use chemical adhesive removers or solvents. Fill all depressions, cracks, and other surface irregularities with a good quality patching compound.

Caution: Do not use liquid solvents or adhesive removers.

Do not install Johnsonite BaseWorks Wall Base over vinyl wall coverings.

Do not install Johnsonite Wall Base over non-porous surfaces with Johnsonite 960 Wall Base Adhesive. For non-porous surfaces apply Johnsonite 946 Premium Contact Adhesive.

3.1. **Adhesives:**

960 Cove Base Adhesive (porous surfaces) ATTACHED

Approximate coverage:

2 ½" high – 300 to 350 linear feet/gallon
4" high – 200 to 250 linear feet/gallon
6" high – 100 to 150 linear feet/gallon

946 Premium Contact Adhesive (non-porous surfaces)

Application: Brush or roller

Approximate coverage:

1 kg Unit (0.95 Qt) – 24 to 36 sq. ft. per unit
6 kg Unit (1.44 Gal.) – 144 to 215 sq. ft. per unit

3.2. **Installation Manual:** Refer to Johnsonite Wall Base Installation Instructions for complete installation details.

4. AVAILABILITY AND COST

Available through authorized Johnsonite distributors nationwide.

5. WARRANTY

Limited 2 year warranty. For complete details, contact Johnsonite or an authorized Johnsonite distributor.

6. MAINTENANCE

Refer to Johnsonite Wall Base Installation Instructions for complete maintenance details.

7. TECHNICAL SERVICES

Samples: Submittal samples for verification and approval available upon request from Johnsonite. Samples shall be submitted in compliance with the requirements of the Contract Documents. Accepted and approved samples shall constitute the standard materials which represent materials installed on the project.

For current Installation and Maintenance Instructions, Product Specifications, and other technical data, visit us on the web at www.johnsonite.com or contact Johnsonite at 800-899-8916.

Johnsonite®
A Tarkett Company

Product Specification

960 Cove Base Adhesive

1. PROPRIETARY PRODUCT/MANUFACTURER

1.1. **Proprietary Product:** Johnsonite #960 Acrylic Cove Base Adhesive specifically formulated for installing Johnsonite Rubber and Vinyl Wall Base, Millwork Wall Base, Tightlock and Perceptions Wall Base and Vent Cove Base.

1.2. **Manufacturer:**

Johnsonite, Inc.,	Phone:	(800) 899-8916
16910 Munn Road		(440) 543-8916
Chagrin Falls, Ohio 44023	Tech:	Ext 9297
Web: www.johnsonite.com	Samples:	Ext 9299
E-mail: info@johnsonite.com	Fax:	(440) 632-8920

1.3. **Proprietary Product Description**

- Johnsonite #960 Cove Base Adhesive is a nonflammable, solvent free, acrylic water-base adhesive.
- For installations over dry porous interior wall surfaces.
- Contains no hazardous or carcinogenic ingredients as defined by OSHA chemicals and meets all federal, state and local air quality regulations.
- Contributes to LEED Certification (E.Q. 4.1: Low-Emitting Materials: Adhesives and Sealants).
  SCAQMD Rule 1168 – VOC compliant
  SCAQMD Rule 443.1 –
  Less than 1 gram VOC per liter of materials
  Less than 1 gram VOC per liter of coating

2. PRODUCT PERFORMANCE and TECHNICAL DATA:

- Base – Acrylic Polymer
- Color – Light Tan Paste
- Shelf Life – 1 year at 70° F (21° C) when stored in unopened, original container in a dry area.
- Freeze thaw up to 5 cycles at 20°F (-6.7°C)

2.1. **Application:**

Porous Wall:

Coverage	2.5"	300-350 lin. ft./gal.
	4"	200-250 lin. ft./gal.
	6"	100-150 lin. ft./gal
	30 oz. cartage	62 to 75 lin. ft.

Non-Porous Wall use Johnsonite #946 Contact Bond

3. INSTALLATION

3.1. **General Installation Requirements:**

- Johnsonite flooring and adhesives must be site conditioned at room temperature for a minimum of 48 hours prior to, during, and after installation. Room temperature must be maintained between 65° and 85°F (18° and 30°C) with HVAC system operating. A minimum temperature of 55°F (13°C) must be maintained afterwards. The ambient relative humidity should be between 40% and 60%.
- Wall shall be smooth, flat, permanently dry, clean and free of all foreign material such as dust, paint, grease, oils, solvents, sealers, and old adhesive residue.
- Do not install on exterior surfaces subject to weather.

4. AVAILABILITY and COST

For availability and cost contact authorized Johnsonite distributors nationwide.

5. LIMITED 1 YEAR WARRANTY

For complete details, contact Johnsonite or an authorized Johnsonite distributor.

6. Traffic:

- Wait 72 hours after installation before performing initial cleaning
- A regular maintenance program must be started after the initial cleaning.

7. TECHNICAL SERVICES

For current Installation and Maintenance Instructions, Product Specifications, Material Safety Data Sheet and other technical data, visit us on the web at www.johnsonite.com or contact Johnsonite at (800) 899-8916.

Scott Kuo/a

Safety Data Sheet
acc. to OSHA HCS

Printing Date 08/20/2014 Revision Number 1 Revision Date 08/20/2014

*
1 Identification

· **Product identifier**

· **Trade name: Johnsonite 960**
· **Relevant identified uses of the substance or mixture.** Adhesive

· **Details of the supplier of the safety data sheet**
· **Manufacturer/Supplier:**
Johnsonite®
16910 Munn Road
Chagrin Falls, OH 44023

· **Information department:** Environment protection department.
· **Emergency telephone number:** ChemTrec: UNITED STATES 1(800)424-9300 INTERNATIONAL 703-527-3887

*
2 Hazard(s) identification

· **Classification of the substance or mixture**
The product does not meet the criteria for classification as hazardous under the GHS and 29 CFR 1910.1200

· **Label elements**
· **GHS label elements** Void
· **Hazard pictograms** Void
· **Signal word** Void
· **Hazard statements** Void
· **Classification system:**
· **NFPA ratings (scale 0 - 4)**

Health = 1
Fire = 0
Reactivity = 0

· **HMIS-ratings (scale 0 - 4)**

HEALTH	1
FIRE	0
PHYSICAL HAZARD	0

Health = 1
Fire = 0
Physical Hazard = 0

· **Other hazards**
· **Results of PBT and vPvB assessment**
· **PBT:** Not applicable.
· **vPvB:** Not applicable.

*
3 Composition/information on ingredients

· **Chemical characterization: Mixtures**
· **Description:** Adhesive

· **Dangerous components:**
and Non-Dangerous Components:

	Styrene-Acrylic Polymer	5-20%

(Contd. on page 2)

Safety Data Sheet
acc. to OSHA HCS

Trade name: Johnsonite 960

(Contd. of page 1)

7732-18-5	water, distilled, conductivity or of similar purity	25-50%

*
4 First-aid measures

· **Description of first aid measures**
· **After inhalation:**
Supply fresh air or oxygen; call for doctor.
In case of unconsciousness place patient stably in side position for transportation.
· **After skin contact:** Immediately wash with water and soap and rinse thoroughly.
· **After eye contact:**
Rinse opened eye for 20 minutes under running water. If eye becomes irritated, obtain medical treatment.
· **After swallowing:**
Rinse out mouth with water. Drink 1 - 2 glasses of water but DO NOT induce vomiting. Do not give liquids to a drowsy, convulsing or unconscious person. If vomiting occurs spontaneously, keep head below hips to prevent aspiration.
Seek medical treatment.
· **Most important symptoms and effects, both acute and delayed** No further relevant information available.
· **Indication of any immediate medical attention and special treatment needed**
No further relevant information available.

*
5 Fire-fighting measures

· **Extinguishing media**
· **Suitable extinguishing agents:**
CO2, extinguishing powder or water spray. Fight larger fires with water spray.
Use fire fighting measures that suit the environment.
· **Special hazards arising from the substance or mixture** Dried solids can burn and release toxic fumes and vapors.
· **Advice for firefighters**
· **Protective equipment:** Protective clothing and respiratory protective device.

*
6 Accidental release measures

· **Personal precautions, protective equipment and emergency procedures**
Wear protective equipment. Keep unprotected persons away.
Ensure adequate ventilation
· **Environmental precautions:** Do not allow to enter sewers/ surface or ground water.
· **Methods and material for containment and cleaning up:**
Absorb with liquid-binding material (sand, diatomite, acid binders, universal binders, sawdust).
Dispose of contaminated material as waste in accordance with federal state and local regulations.
Ensure adequate ventilation.
· **Reference to other sections**
See Section 7 for information on safe handling.
See Section 8 for information on personal protection equipment.
See Section 13 for disposal information.

(Contd. on page 3)

Safety Data Sheet
acc. to OSHA HCS

Trade name: Johnsonite 960

(Contd. of page 2)

*
7 Handling and storage

· **Precautions for safe handling**
Avoid prolonged or repeated contact with skin.
Avoid contact with eyes.
Wash thoroughly after handling.
Prevent formation of aerosols.
· **Information about protection against explosions and fires:** No special measures required.

· **Conditions for safe storage, including any incompatibilities**
· **Storage:**
· **Requirements to be met by storerooms and receptacles:** Store in a cool location away from direct heat.
· **Information about storage in one common storage facility:** Store away from oxidizing agents.
· **Further information about storage conditions:**
Keep receptacle tightly sealed.
Protect product from freezing.
· **Specific end use(s)** No further relevant information available.

*
8 Exposure controls/personal protection

· **Additional information about design of technical systems:** No further data; see item 7.

· **Control parameters**
· **Components with limit values that require monitoring at the workplace:**
The product does not contain any relevant quantities of materials with critical values that have to be monitored at the workplace.
· **Additional information:** The lists that were valid during the creation were used as basis.

· **Exposure controls**
· **Personal protective equipment (see listings below)**
· **General protective and hygienic measures:**
The usual precautionary measures for handling chemicals should be followed.
· **Breathing equipment:** Not necessary if room is well-ventilated.
· **Protection of hands:**

Protective gloves

The glove material has to be impermeable and resistant to the product/ the substance/ the preparation.
· **Material of gloves**
Nitrile rubber, NBR
Chloroprene rubber, CR
The selection of the suitable gloves does not only depend on the material, but also on further marks of quality and varies from manufacturer to manufacturer.
· **Eye protection:** Safety glasses with side shields.
· **Body protection:** Protective work clothing

(Contd. on page 4)

Safety Data Sheet
acc. to OSHA HCS

(Contd. of page 3)

*
9 Physical and chemical properties

· **Information on basic physical and chemical properties**	
· **General Information**	
· **Appearance:**	
Form:	Paste
Color:	Tan
· **Odor:**	Characteristic
· **Odour threshold:**	Not determined.
· **pH-value at 20 °C (68 °F):**	9.3
· **Change in condition**	
Melting point:	Undetermined.
Boiling point:	100 °C (212 °F)
· **Flash point:**	Not applicable.
· **Flammability (solid, gaseous):**	Not applicable.
· **Ignition temperature:**	
Decomposition temperature:	Not determined.
· **Auto igniting:**	Product is not selfigniting.
· **Danger of explosion:**	Product does not present an explosion hazard.
· **Flammable limits:**	
Lower:	Not determined.
Upper:	Not determined.
· **Vapor pressure at 20 °C (68 °F):**	23 hPa (17 mm Hg)
· **Specific gravity at 20 °C (68 °F):**	1.14 g/cm³ (9.513 lbs/gal)
· **Relative density**	Not determined.
· **Vapour density**	Not determined.
· **Evaporation rate**	Not determined.
· **Solubility in / Miscibility with**	
Water:	Not miscible or difficult to mix.
· **Partition coefficient (n-octanol/water):**	Not determined.
· **Viscosity:**	
Dynamic:	Not determined.
Kinematic:	Not determined.
· **Solvent content:**	
Organic solvents:	0.0 %
VOC (Per EPA 24)	Not Available GMS/L
Solids content:	57%
· **Other information**	California VOC Compliance: Solvent Free Product: SCAQMD Rule 1168: VOC compliant SCAQMD Rule 443.1: Grams per Liter of Material <1 gram/liter Grams per Liter of Coating <1 gram/liter

(Contd. on page 5)

Safety Data Sheet
acc. to OSHA HCS

(Contd. of page 4)

*
10 Stability and reactivity

· **Reactivity**
· **Chemical stability**
· **Thermal decomposition / conditions to be avoided:** No decomposition if used according to specifications.
· **Possibility of hazardous reactions** No dangerous reactions known.
· **Conditions to avoid** Temperatures below 40F (4.4C)
· **Incompatible materials:** Reacts with oxidizing agents.
· **Hazardous decomposition products:** Carbon monoxide and carbon dioxide

*
11 Toxicological information

· **Information on toxicological effects**
· **Acute toxicity:**
· **Primary irritant effect:**
· **on the skin:** May irritate the skin.
· **on the eye:** May irritate the eye.
· **Sensitization:** No sensitizing effects known.
· **Additional toxicological information:**
The product is not subject to classification according to internally approved calculation methods for preparations:
When used and handled according to specifications, the product does not have any harmful effects according to our experience and the information provided to us.

· **Carcinogenic categories**

· **IARC (International Agency for Research on Cancer)**
None of the ingredients is listed.

· **NTP (National Toxicology Program)**
None of the ingredients is listed.

· **OSHA-Ca (Occupational Safety & Health Administration)**
None of the ingredients is listed.

*
12 Ecological information

· **Toxicity**
· **Aquatic toxicity:** No further relevant information available.
· **Persistence and degradability** No further relevant information available.
· **Bioaccumulative potential** No further relevant information available.
· **Mobility in soil** No further relevant information available.
· **Additional ecological information:**
· **General notes:** At present there are no ecotoxicological assessments.
· **Results of PBT and vPvB assessment**
· **PBT:** Not applicable.
· **vPvB:** Not applicable.
· **Other adverse effects** No further relevant information available.

(Contd. on page 6)

Safety Data Sheet
acc. to OSHA HCS

(Contd. of page 5)

*
13 Disposal considerations

· **Waste treatment methods**
· **Recommendation:** Must be specially treated adhering to official regulations.

· **Uncleaned packagings:**
· **Recommendation:** Disposal must be made according to official regulations.

*
14 Transport information

· **UN-Number** · **DOT, ADR, ADN, IMDG, IATA**	not regulated
· **UN proper shipping name** · **DOT, ADR, ADN, IMDG, IATA**	not regulated
· **Transport hazard class(es)** · **DOT, ADR, ADN, IMDG, IATA** · **Class**	not regulated
· **Packing group** · **DOT, ADR, IMDG, IATA**	not regulated
· **Environmental hazards:**	Not applicable.
· **Special precautions for user**	Not applicable.
· **Transport in bulk according to Annex II of MARPOL73/78 and the IBC Code**	Not applicable.
· **Transport/Additional information:**	DOT, ADR, IMDG, IATA - Not regulated in transport. Not dangerous according to the above specifications.
· **UN "Model Regulation":**	-

*
15 Regulatory information

· **Safety, health and environmental regulations/legislation specific for the substance or mixture**
· **Sara**

· **Section 355 (extremely hazardous substances):**
None of the ingredients is listed.

· **Section 313 (Specific toxic chemical listings):**
None of the ingredients is listed.

· **TSCA (Toxic Substances Control Act):**
All components of this product are on the TSCA Inventory or are exempt from TSCA Inventory requirements.

· **Proposition 65**

· **Chemicals known to cause cancer:**
None of the ingredients is listed.

· **Chemicals known to cause reproductive toxicity:**
None of the ingredients is listed.

(Contd. on page 7)

Safety Data Sheet
acc. to OSHA HCS

(Contd. of page 6)

· ***(DSL) Canada Dosmestic Substance List***
All components of this product are on the DSL(Canada Domestic Substance list) or are exempt from DSL requirements.

· ***Cancerogenity categories***

· ***EPA (Environmental Protection Agency)***
None of the ingredients is listed.

· ***TLV (Threshold Limit Value established by ACGIH)***
None of the ingredients listed.

· ***MAK (German Maximum Workplace Concentration)***
None of the ingredients is listed.

· ***NIOSH-Ca (National Institute for Occupational Safety and Health)***
None of the ingredients is listed.

· ***Chemical safety assessment:*** *A Chemical Safety Assessment has not been carried out.*

*
16 Other information

Although the information and recommendations set forth in this SDS are presented in good faith and are believed to be correct as of the date of this SDS, Royal Adhesives & Sealants makes no representations as to the completeness or accuracy thereof. Information is supplied on the condition that the persons receiving and using it will make their own determination as to the suitability for their purpose prior to use. In no event will Royal Adhesives & Sealants or any affiliate thereof be responsible for damages of any nature whatsoever resulting from the use or reliance on the information set forth in the SDS.

· ***Department issuing SDS:*** *Environment protection department.*
· ***Creation Date:*** *09/20/2011*
· ***Date of preparation / last revision*** *08/20/2014 / -*
· ***Abbreviations and acronyms:***
RID: Règlement international concernant le transport des marchandises dangereuses par chemin de fer (Regulations Concerning the International Transport of Dangerous Goods by Rail)
ICAO: International Civil Aviation Organization
ADR: Accord européen sur le transport des marchandises dangereuses par Route (European Agreement concerning the International Carriage of Dangerous Goods by Road)
IMDG: International Maritime Code for Dangerous Goods
DOT: US Department of Transportation
IATA: International Air Transport Association
ACGIH: American Conference of Governmental Industrial Hygienists
EINECS: European Inventory of Existing Commercial Chemical Substances
ELINCS: European List of Notified Chemical Substances
CAS: Chemical Abstracts Service (division of the American Chemical Society)
NFPA: National Fire Protection Association (USA)
HMIS: Hazardous Materials Identification System (USA)

DEPARTMENT OF LABOR AND INDUSTRY
Building Codes Bureau
PO Box 200517
Helena, MT 59620-0517

8/15/2014

ED BOLAND CONSTRUCTION
4701 NORTH STAR BLVD
GREAT FALLS, MT 59405

INVOICE

BUILDING 31'Ø WATER TANK

REFERENCE NUMBER: 2014-BLDG-000804

Total Fees: $1,720.00

JOB SITE ADDRESS
0 S14, T19 N, R04 E, TR 1 IN NESE MK 2C
Unknown, MT

Your permit or certificate of operation cannot not be issued without payment.
Please send payment to the following address:

DEPARTMENT OF LABOR AND INDUSTRY
Building Codes Bureau
PO Box 200517
Helena, MT 59620-0517

DEPARTMENT OF LABOR AND INDUSTRY
Building Codes Bureau
PO Box 200517
Helena, MT 59620-0517

8/15/2014

ED BOLAND CONSTRUCTION
4701 NORTH STAR BLVD
GREAT FALLS, MT 59405

INVOICE

BUILDING WELL HOUSE

REFERENCE NUMBER: 2014-BLDG-000803

Total Fees: $597.00

JOB SITE ADDRESS
0 S14, T19 N, R04 E, TR 1 IN NESE MK 2C
Unknown, MT

Your permit or certificate of operation cannot not be issued without payment.
Please send payment to the following address:

DEPARTMENT OF LABOR AND INDUSTRY
Building Codes Bureau
PO Box 200517
Helena, MT 59620-0517

https://BuildingPermits.Mt.Gov
406-841-2056

Excavation Permit
Cascade County, Montana

Permit Number: 1757
APPROVED

Effective Date: August 18, 2014
Expiration Date: November 18, 2014

Applicant: Boland Construction, Inc
Mailing Address: 4701 North Star Blvd
City, State, Zip Code: Great Falls, MT 59404
Phone: 406-761-1063//406-231-3970

Fees

Excavation Fee:	$75.00
Longitudinal Fee:	$3.60
Surety Deposit:	$0.00
Total:	$78.60
Paid:	$0.00
Balance Due:	$78.60

Location: Sand Coulee (2 locations on East Hunter)

Purpose: Installing New Water Mains

Dimensions: 120 LF (60' bores x 2) Depth: _____

APPROVED BY
CASCADE COUNTY ROAD SUPERINTENDENT

8/7/2014
DATED

- [ ] Must be at least _____ from centerline of road
- [X] Replace in kind all right-of-way soils and/or Surfaces
- [X] Bore all roadway crossings (Asphalt)
- [X] Revegetate all disturbed areas, per attached
- [ ] Compaction testing, ____ per lift on backfill activity: 95% maximum density of STD, proctor
- [ ] Over head

THE PERMITEE ABOVE HEREBY ACCEPTS THIS PERMIT, TOGETHER WITH ALL OF THE TERMS AND CONDITIONS AS SET FORTH IN THE ORIGINAL APPLICATION.
THE COUNTY COMMISSIONERS RESOLUTION #95-74 LISTED ON THE BACK OF THE ORIGINAL APPLICATION SHALL BE CONSIDERED A PART OF THIS PERMIT.

CASCADE COUNTY, MONTANA
COUNTY ZONING DISTRICT

Cascade County Planning Department
121 4th St N, STE 2H/I
Great Falls, MT 59401
Phone: (406) 454-6905

LOCATION / CONFORMANCE PERMIT

This is a permit issued in recognition of compliance with zoning requirements set forth in the County Zoning Regulations for the County Zoning District Area. THIS IS NOT A BUILDING PERMIT.

Permit Number 105-014

Date Permit Issued 08/01/2014
Date to be Completed 08/01/2015

Name of Applicant: *Ed Boland Construction (Sand Coulee Water Dist.)*

Property Address for Permit:

Structure Type Permit Issued For: *Well House & Water Tank (replace existing unit)*

Mailing Address: *4701 North Star Blvd.*

City, State, Zip: *Great Falls MT 59405*

Legal Description:

Section *14* Township *19* Range *4E*

Subdivision Name:

Block # Lot #

Parcel Number *4146550*

Geo Code *2893 14 2 01 02*

Conditions of Permit:

- *Must obtain any other required STATE building permits or business Licenses, Call 406-439-2982*
- *All approvals pertaining to waste water systems must be obtained from City-County Health Dept, 454-6950.*
- *Required setbacks from lot lines for Industrial districts: 15ft from front, 10ft from sides, 25ft from back. If lot abuts residential district, side and back yard setbacks are 75ft from lot line.*
- *If you disturb one (1) acre or more with your project, you are required to obtain a General Discharge permit for stormwater associated with construction activities from the Department of Environmental Quality.*

County Zoning Administrator

APPENDIX A-6

WORK DIRECTIVE CHANGE

(Instructions on Reverse Side) No. 1

PROJECT: Sand Coulee Water System Replacement Project

DATE OF ISSUANCE:

CONTRACTOR:Ed Boland Construction Dision (Name, Address)

OWNER: Dept of Environmental Quality Remediation

DEQ Contract No.: 414006

CONTRACT FOR: Sand Coulee water replacement

ENGINEER:NCI Engineering

You are directed to proceed promptly with the following change(s):

Description: Electrical Modifications, 120/240 volt to 480 volt equipment and deletion of well #3

Purpose of Work Directive Change: allow larger pump motors to be used with higher flow capacity

Attachments: (list documents supporting change) Boland letters dated November 19, 2014 on cost and description of work

---

If a claim is made that the above change(s) have affected Contract Price or Contract Time, any claim for a Change Order based thereon will involve one of the following methods of determining the effect of the change(s).

Method of determining change in Contract Price:

- ☐ Time and Materials
- ☐ Unit Prices
- ☑ Lump Sum
- ☐ Other ____negotiated_____

Method of determining change in Contract Time:

- ☐ Contractor's Records
- ☐ Engineer's Records
- ☐ Other _____

Estimated increase (decrease) in Contract Price: $8,308 . If the change involves an increase, the estimated amount is not to be exceeded without further authorization.

Estimated increase (decrease) in Contract Time: 0 days. If the change involves an increase, the estimated time is not to be exceeded without further authorization.

RECOMMENDED:

By: Ralph McDilling, NCI
Engineer

AUTHORIZED:

By _____, DEQ
Owner

ACCEPTED:

By: _____
Contractor

Rev. 6/04

WORK DIRECTIVE CHANGE

INSTRUCTIONS

A. GENERAL INFORMATION

This document was developed for use in situations involving changes in the Work which, if not processed expeditiously, might delay the Project. These changes are often initiated in the field and may affect the Contract Price or the Contract Time. This is not a Change Order, but only a directive to proceed with Work that may be included in a subsequent Change Order.

For supplemental instructions and minor changes not involving a change in the Contract Price or the Contract Time, a Field Order may be issued.

B. COMPLETING THE WORK DIRECTIVE CHANGE

Engineer initiates the form, including a description of the items involved and attachments.

Based on conversations between Engineer and Contractor, Engineer to indicate the following and attach the same hereto:

> **METHOD OF DETERMINING CHANGE, IF ANY, IN CONTRACT PRICE: Indicate the method to be used in determining the final cost of Work involved and the net effect on the Contract Price. If the change involves an increase in the Contract Price and the estimated amount is approached before the additional or changed work is completed, another Work Directive Change must be issued to change the time or Contractor may stop the changed Work when the estimated time is reached. If the Work Directive Change is not likely to change the Contract Price, the space for estimated increase (decreased) should be marked "Not Applicable".**
>
> **METHOD OF DETERMINING CHANGE, IF ANY, IN CONTRACT TIME: Indicate the method to be used in determining the change in Contract Time and the estimated increase or decrease in Contract Time. If the change involves an increase in the Contract Time and the estimated time is approached before additional or changed Work is completed, another Work Directive Change must be issued to change the time or Contractor may stop the changed Work when the estimated time is reached. If the Work Directive Change is not likely to change the Contract Time, the space for estimated increase (decrease) should be marked "Not Applicable".**

Once Engineer has completed and signed this form, all copies must be sent to Owner for authorization because Engineer alone does not have authority to authorize changes in Price or Time. Once authorized by Owner, a copy must be sent by Engineer to Contractor.

Once the Work covered by this directive is completed for final cost and time determined, Contractor must submit documentation for inclusion in a Change Order.

THIS IS A DIRECTIVE TO PROCEED WITH A CHANGE THAT MAY AFFECT THE CONTRACT PRICE OR THE CONTRACT TIME. A CHANGE ORDER, IF ANY, MUST BE CONSIDERED PROMPTLY.

WORK DIRECTIVE CHANGE

(Instructions on Reverse Side) No. 2

PROJECT: Sand Coulee Water System Replacement Project

DATE OF ISSUANCE: May 4, 2015

CONTRACTOR: Ed Boland Construction
4701 North Starr Blvd
Great Falls, MT

OWNER: Dept. of Environmental Quality Remediation Div

DEQ Contract No.: 414006

CONTRACT FOR: Sand Coulee Water Replacement

ENGINEER: NCI Engineering

You are directed to proceed promptly with the following change(s):

Description: Perform additional exploratory excavation as approved by engineer to locate water service lines. Project contract time (including winter shut down and 4 weather days) will now be extended from May 7, 2015 through June 11, 2015 a total of 35 calendar days".

Attachments: (list documents supporting change)
Boland Construction correspondence dated April 28, 2015

If a claim is made that the above change(s) have affected Contract Price or Contract Time, any claim for a Change Order based thereon will involve one of the following methods of determining the effect of the change(s).

Method of determining change in Contract Price:

- ☐ Time and Materials
- ☒ Unit Prices
- ☐ Lump Sum
- ☐ Other ____negotiated_____

Method of determining change in Contract Time:

- ☒ Contractor's Records
- ☐ Engineer's Records
- ☐ Other _____

Estimated increase (decrease) in Contract Price: $62,535.00. If the change involves an increase, the estimated amount is not to be exceeded without further authorization.

Estimated increase in Contract Time: 35 calendar days. If the change involves an increase, the estimated time is not to be exceeded without further authorization.

RECOMMENDED:

By: Ralph M Gillespie -NCI 5-6-15
Engineer

AUTHORIZED:

By _____ 5/6/15
Owner

ACCEPTED:

By: _____
Contractor

Rev. 6/04

WORK DIRECTIVE CHANGE

INSTRUCTIONS

A. GENERAL INFORMATION

This document was developed for use in situations involving changes in the Work which, if not processed expeditiously, might delay the Project. These changes are often initiated in the field and may affect the Contract Price or the Contract Time. This is not a Change Order, but only a directive to proceed with Work that may be included in a subsequent Change Order.

For supplemental instructions and minor changes not involving a change in the Contract Price or the Contract Time, a Field Order may be issued.

B. COMPLETING THE WORK DIRECTIVE CHANGE

Engineer initiates the form, including a description of the items involved and attachments.

Based on conversations between Engineer and Contractor, Engineer to indicate the following and attach the same hereto:

> **METHOD OF DETERMINING CHANGE, IF ANY, IN CONTRACT PRICE: Indicate the method to be used in determining the final cost of Work involved and the net effect on the Contract Price. If the change involves an increase in the Contract Price and the estimated amount is approached before the additional or changed work is completed, another Work Directive Change must be issued to change the time or Contractor may stop the changed Work when the estimated time is reached. If the Work Directive Change is not likely to change the Contract Price, the space for estimated increase (decreased) should be marked "Not Applicable".**
>
> **METHOD OF DETERMINING CHANGE, IF ANY, IN CONTRACT TIME: Indicate the method to be used in determining the change in Contract Time and the estimated increase or decrease in Contract Time. If the change involves an increase in the Contract Time and the estimated time is approached before additional or changed Work is completed, another Work Directive Change must be issued to change the time or Contractor may stop the changed Work when the estimated time is reached. If the Work Directive Change is not likely to change the Contract Time, the space for estimated increase (decrease) should be marked "Not Applicable".**

Once Engineer has completed and signed this form, all copies must be sent to Owner for authorization because Engineer alone does not have authority to authorize changes in Price or Time. Once authorized by Owner, a copy must be sent by Engineer to Contractor.

Once the Work covered by this directive is completed for final cost and time determined, Contractor must submit documentation for inclusion in a Change Order.

THIS IS A DIRECTIVE TO PROCEED WITH A CHANGE THAT MAY AFFECT THE CONTRACT PRICE OR THE CONTRACT TIME. A CHANGE ORDER, IF ANY, MUST BE CONSIDERED PROMPTLY.

Boland Construction Inc.

4701 North Star Blvd., Great Falls, MT 59405
Ph: 406-761-1063 Fax: 406-761-1076
email: office@bolandconstruction.net

April 28, 2015

NCI Engineering
Attn: Ralph McGillivray, Project Engineer
Sent via e-mail: ralphm@nciengineering.com

Department of Environmental Quality
Attn: Tom Henderson, Reclamation Specialist
Sent via e-mail: thenderson@mt.gov

RE: Request for time extension
Sand Coulee Water System Improvements

Gentlemen,

As you are aware, per our construction meeting last week in Sand Coulee, I am requesting more contract time in order to bridge the gap between current completion and substantial completion. Our firm is requesting an additional 25 working days.

The project so far has been a great success, even with the unforeseen conditions and uniqueness of working in a historic mining town. The search for existing water main and services has consumed much more time than we anticipated or bid for and building this project is extremely contingent upon locating these lines. For example, bid item 405 – exploratory excavation – the engineer's estimate was 30 hours and as of the December pay application we were at 394 hours. Also, ¾" water service lines have drastically increased in production time and distance from the original bid item. There also have been numerous other unexpected challenges that have occurred throughout the project.

It is our goal to complete this project as expeditiously as possible in order to provide the residents of the Sand Coulee community with a new state-of-the-art water system. Our firm would appreciate your consideration of additional time to finalize this intricate project.

Sincerely,

Barry Boland
President

WORK DIRECTIVE CHANGE

(Instructions on Reverse Side) No. 3

PROJECT: Sand Coulee Water System Replacement Project

DATE OF ISSUANCE: May 7, 2015

CONTRACTOR: Ed Boland Construction
4701 North Starr Blvd
Great Falls, MT

OWNER: Dept of Environmental Quality Remediation Div

DEQ Contract No.: 414006

CONTRACT FOR: Sand Coulee Water Replacement

ENGINEER: NCI Engineering

You are directed to proceed promptly with the following change(s):

Description: Installation of Variable Frequency Drive and 25 HP 3 phase 230 volt pump and motor in Well 5. The work shall include installation of a stainless steel Grundfos 150S250-13 25 HP pump, 422 feet of PVC conduit, 422 feet of electrical wire, 422 feet of 3-inch galvanized steel pipe, two three-inch check valves, and the required chlorination and flushing for disinfection in accordance with the DEQ Public Water Supply approved plans and specifications(see Attached).

Purpose of Work Directive Change: Install VFD and pump to produce 160 gpm as allowed by current Sand Coulee Water Rights

Attachments: (list documents supporting change)

Boland Construction cost estimate dated September 30, 2014
Boland Construction cost estimate dated April 28, 2015
Letter to Rachel Clark, DEQ dated June 23, 2014

If a claim is made that the above change(s) have affected Contract Price or Contract Time, any claim for a Change Order based thereon will involve one of the following methods of determining the effect of the change(s).

Method of determining change in Contract Price:

- [x] Time and Materials
- [ ] Unit Prices
- [ ] Lump Sum
- [ ] Other ____negotiated_____

Estimated increase (decrease) in Contract Price: $27,739.60. If the change involves an increase, the estimated amount is not to be exceeded without further authorization.

Method of determining change in Contract Time:

- [ ] Contractor's Records
- [x] Engineer's Records
- [ ] Other _____

Estimated increase (decrease) in Contract Time: 3 days. If the change involves an increase, the estimated time is not to be exceeded without further authorization.

RECOMMENDED:

By: Mark W. Thode
Engineer

AUTHORIZED:

By _____
Owner

ACCEPTED:

By: _____
Contractor

Rev. 6/04

WORK DIRECTIVE CHANGE

INSTRUCTIONS

A. GENERAL INFORMATION

This document was developed for use in situations involving changes in the Work which, if not processed expeditiously, might delay the Project. These changes are often initiated in the field and may affect the Contract Price or the Contract Time. This is not a Change Order, but only a directive to proceed with Work that may be included in a subsequent Change Order.

For supplemental instructions and minor changes not involving a change in the Contract Price or the Contract Time, a Field Order may be issued.

B. COMPLETING THE WORK DIRECTIVE CHANGE

Engineer initiates the form, including a description of the items involved and attachments.

Based on conversations between Engineer and Contractor, Engineer to indicate the following and attach the same hereto:

METHOD OF DETERMINING CHANGE, IF ANY, IN CONTRACT PRICE: Indicate the method to be used in determining the final cost of Work involved and the net effect on the Contract Price. If the change involves an increase in the Contract Price and the estimated amount is approached before the additional or changed work is completed, another Work Directive Change must be issued to change the time or Contractor may stop the changed Work when the estimated time is reached. If the Work Directive Change is not likely to change the Contract Price, the space for estimated increase (decreased) should be marked "Not Applicable".

METHOD OF DETERMINING CHANGE, IF ANY, IN CONTRACT TIME: Indicate the method to be used in determining the change in Contract Time and the estimated increase or decrease in Contract Time. If the change involves an increase in the Contract Time and the estimated time is approached before additional or changed Work is completed, another Work Directive Change must be issued to change the time or Contractor may stop the changed Work when the estimated time is reached. If the Work Directive Change is not likely to change the Contract Time, the space for estimated increase (decrease) should be marked "Not Applicable".

Once Engineer has completed and signed this form, all copies must be sent to Owner for authorization because Engineer alone does not have authority to authorize changes in Price or Time. Once authorized by Owner, a copy must be sent by Engineer to Contractor.

Once the Work covered by this directive is completed for final cost and time determined, Contractor must submit documentation for inclusion in a Change Order.

THIS IS A DIRECTIVE TO PROCEED WITH A CHANGE THAT MAY AFFECT THE CONTRACT PRICE OR THE CONTRACT TIME. A CHANGE ORDER, IF ANY, MUST BE CONSIDERED PROMPTLY.

APPENDIX A-7

Sand Coulee Pump Installation for Well #6
Bid Tabulation
November 16, 2016

				Pat Byrne Drilling Inc.		Boland Well Systems	
Bid Item Number	**Item**	**Unit**	**Estimated Quantity**	**Unit Cost**	**Total**	**Unit Cost**	**Total**
101	Excavation and Backfill	LS	1	$ 7,000.00	$ 7,000.00	$ 6,000.00	$ 6,000.00
102	New Submersible Pump	LS	1	$ 14,703.00	$ 14,703.00	$ 17,710.00	$ 17,710.00
103	New VFD	LS	1	$ 5,500.00	$ 5,500.00	$ 5,900.00	$ 5,900.00
104	Miscellaneous Well Items	LS	1	$ 1,628.00	$ 1,628.00	$ 2,800.00	$ 2,800.00
105	Miscellaneous Mechanical	LS	1	$ 1,500.00	$ 1,500.00	$ 2,327.00	$ 2,327.00
106	Electrical	LS	1	$ 5,340.00	$ 5,340.00	$ 4,000.00	$ 4,000.00
107	Gravel Surface Restoration	SY	160	$ 20.00	$ 3,200.00	$ 5,240.00	$ 5,240.00
	Sewer Total				**$ 38,871.00**		**$ 43,977.00**

APPENDIX A-8

Notice of Award

Dated 11-21-16

Project: **Sand Coulee Water Supply**	Contractor: **Hydrometrics, Inc.**	Owner's Contract No.: 414006
Contract: : **Sand Coulee Pump Install For Well #6**		Engineer's Project No.: **1204**
Bidder: Pat Byrne Drilling, Inc.		
Bidder's Address: (send Certified Mail, Return Receipt Requested) 245 Gerber Road, Great Falls, MT 59405		

You are notified that your Bid dated 11-16-16 for the above Contract has been considered. You are the Successful Bidder and are awarded a Contract for Sand Coulee Pump Install for Well #6.

The total Bid Price of your Contract is $38,871.00

Hydrometrics, Inc.
Contractor

By: _____
Authorized Signature

Project Hydrogeologist
Title

Copy to Engineer

EJCDC No. C-550 (2002)
Prepared by the Engineers' Joint Contract Documents Committee and endorsed by the Associated General Contractors of America and the Construction Specifications Institute.

PROFESSIONAL SERVICES SUBCONTRACT

This Agreement, dated as of the 21 day of November 2016, by and between **Hydrometrics, Inc.,** whose address is 3020 Bozeman Avenue, Helena, MT 59601, hereinafter called the "Contractor" and **Pat Byrne Drilling, Inc.** whose address is 245 Gerber Road, Great Falls, MT 59405, hereinafter called the "Subcontractor."

All communications, correspondence and inquires, whether oral or written in nature, concerning the performance of this Subcontract for Services shall be directed to:

Hydrometrics, Inc.
Attention: Michael R. Wignot
3020 Bozeman Avenue
Helena, MT 59601

THEREFORE, intending to be legally bound hereby, the parties hereto agree as follows:

1. SCOPE OF SERVICES

Exhibit A, Sand Coulee Pump Installation for Well #6, September 2016, hereto sets forth the scope of Subcontractor's services which is incorporated herein along with any other Exhibit and constitute the "Contract Documents." In the event of any inconsistency between this Agreement and the Contract Documents, the terms of this Agreement shall control, and in the event of any inconsistency between Exhibit A and the Contract Documents other than this Agreement, this Agreement shall control.

The parties may, at any time, by written agreement, change, modify or add work, or direct the omission of work and services. If such changes require a change in the time of performance of the work called for hereunder, the rates indicated in the Contract Documents shall be adjusted by reason of any modification issued under this Section.

2. TIME FOR PERFORMANCE

Subcontractor shall commence work on or about the date of this Agreement and shall complete said work on or about February 1, 2017.

If the completion of this Agreement is delayed by actions of Contractor, then and in such event the time of completion of this Agreement shall be extended for such additional time within which to complete the performance of the Agreement as is required by such delay.

3. PAYMENTS

The Contractor undertakes and agrees to pay Subcontractor for doing and performing the work herein specified on the basis described below, and Subcontractor agrees to accept in full payment for such work at the unit prices and hourly rates specified in Exhibit B attached. Subcontractor agrees that the total fee for services provided hereunder shall not exceed the amount specified in Exhibit B. It is understood that all tasks involving hourly rates will be mutually agreed upon in writing prior to beginning such tasks.

Subcontractor will present to the Contractor on or before the 25th of each month an invoice, in such detail as may be requested by the Contractor, covering all the compensation for the prior month and including a list of the hours worked, rates, and total charges of each compensation category listed in the Contract Documents. Each invoice shall be supported with reasonable documentation necessary to substantiate the costs and charges. Contractor will pay Subcontractor the amount due within fourteen (14) days after receipt of the payment to Hydrometrics from the Owner (Client). Amounts past due are subject to an annual interest rate of 10%, compounded monthly.

Final payment shall be made by the Contractor within fourteen (14) days after Owner (Client) has paid Hydrometrics upon completion of the work by Subcontractor in a satisfactory manner and upon Subcontractor furnishing Contractor with a satisfactory final invoice.

4. PAYMENTS WITHHELD

Contractor may withhold all or part of any payment to the extent necessary to protect Contractor from loss or damage as a result of (a) damaged or defective work not remedied, (b) claims filed or reasonable evidence indicating probable filing of claims by other parties against Subcontractor or Contractor, (c) a reasonable doubt that this Agreement can be completed for the balance then unpaid, or (d) damage to Contractor's property.

5. LIENS

If any lien remains unsatisfied after payment of the full Agreement price has been made, Subcontractor shall refund to Contractor all moneys that the latter may be compelled to pay in discharging such lien, including all costs, expenses and a reasonable attorney's fee.

6. GUARANTY BONDS

If Contractor has so requested prior to the signing of this Agreement, Subcontractor, at the option of Contractor, agrees to furnish or permit Contractor to secure bonds in

the full amount of the Agreement written by a surety company designated by, or otherwise satisfactory to, Contractor, guaranteeing and conditioned for the full, complete and faithful performance of this Agreement by Subcontractor and for the payment of claims for labor performed or materials furnished in connection herewith, all in accordance with the terms of the bonds.

The premium for the bonds will be paid by Contractor and must not be included by Subcontractor in the Agreement price. In the event Contractor elects to secure such bonds, Subcontractor agrees to sign the required application, to furnish necessary financial statements and financial guarantees, and to otherwise cooperate with Contractor, in securing the bonds. If any change in work is authorized pursuant to the terms of this Agreement, Subcontractor shall cooperate with Contractor so as to ensure Contractor's ability to secure and maintain bonds for the same.

7. TITLE TO THE WORK

Title to all work completed or in the course of construction shall be in the name of the Owner and title to all materials to be incorporated in the work shall be in the name of the Owner as soon as they are delivered on the site of the job.

8. INSPECTION AND REPAIR

Subcontractor shall provide safe and proper facilities at all times for the inspection of the work by Contractor, and shall as soon as practicable after written notice from Contractor, at Subcontractor's sole expense, replace and repair any materials or portions of the work which Contractor or Owner, in its sole discretion, shall deem defective or otherwise not in compliance with the specifications, design or performance requirements set forth in this Agreement and make good all work damaged or destroyed thereby, whether or not there shall be a dispute with respect to any of the foregoing. Any such dispute shall be settled by arbitration.

9. PROTECTION BY SUBCONTRACTOR

Subcontractor at all times shall maintain adequate protection of the work from damage and shall protect Contractor's and Owner's property and all persons thereon from injury, damage or loss by reason of any act or omission of Subcontractor or any Subcontractor. Where such damage includes damage to the work it shall be repaired at the expense of Subcontractor.

Subcontractor shall use its best judgment and skill in dealing with labor matters, and take all reasonable steps to avoid labor dispute. In the event of any strike or threat of strike, slowdowns, featherbedding, or other like practices, Subcontractor shall apprise Contractor of all relevant facts and implications of the particular labor problem involved, and shall consult in good faith with Contractor in an endeavor to reach a mutually satisfactory solution to such labor problem and, so far as reasonably

possible, to protect Contractor against delays affecting the work or damage or losses to its other operations.

10. SUBCONTRACTOR'S INSURANCE

Subcontractor shall, for the mutual protection and benefit of both Contractor and Subcontractor, procure, pay for and maintain in full force and effect, at all times during the performance of the work and until final acceptance of the work, policies of insurance issued by carriers acceptable to Contractor that afford the following coverages:

Insurance	**Minimum Contract Requirement**
Workers' Compensation	Statutory
Employers' Liability	Not Less than $500,000
Comprehensive General Liability including Independent Contractor's Broad Form Contractual, Broad Form Property Damage, Personal Injury, Completed Operations and Products Coverages (Such Completed Operations and Products coverages shall be provided for a period of two (2) years after final completion and final acceptance of the work by Owner), and deletion of any exclusion pertaining to explosion, collapse, underground property damage, radiation and pollution hazards.	Not less than $1,000,000 combined single limit for both bodily injury and property damage
Professional Liability	Not less than $1,000,000 for each expense and aggregate limits
Comprehensive Automobile Liability including Owned, Non-Owned, and Hired car coverages.	Not less than $1,000,000 combined single limit for both bodily injury and property damage

Subcontractor hereby agrees to deliver to Contractor, at least ten (10) business days of the date hereof and prior to any equipment or personnel being brought onto Contractor's premises in accordance with the terms of this Agreement, Certificates of Insurance evidencing the above coverage with limits not less than those specified above. Such Certificates, with the exception of Workers' Compensation shall name

Contractor, its subsidiaries, directors, officers, agents and employees as additional insured and shall expressly provide that the interest of same therein shall not be affected by any breach by Subcontractor of any policy provision for which such Certificates evidence coverage. All policies and certificates, except for Workers Compensation and auto liability, shall contain endorsements waiving the insurers' right of subrogation against Contractor, its subsidiaries, agents and affiliated companies, and their directors, officers, agents and employees. All Certificates shall expressly provide that no less than thirty (30) days prior written notice shall be given Contractor in the event of material alternation to or cancellation of the coverage evidenced by such Certificates.

11. INDEMNITY BY SUBCONTRACTOR

Subcontractor hereby agrees to protect, defend, indemnify and hold harmless Contractor, its affiliated companies and their directors, officers, agents, servants and employees (hereafter individually and collectively referred to as "Indemnities") from and against any and all penalties, fines, awards, settlements and losses (economic or otherwise) suffered or incurred by the Indemnities on account of any suit(s), action(s), demand(s), claim(s), proceeding(s), liability or damages of any character and from and against all costs and expenses, including attorney fees incidental to the defense and settlement of the same whether alleged, threatened or commenced by or in favor of any governmental or other entity or by any person or persons against the Indemnities on account of the violation of any applicable law or ordinances, personal injury (including death, disability, sickness and any loss arising therefrom) or environmental, property (including the loss of use resulting therefrom) or other damages, arising out of, alleged to arise out of or in any way otherwise attributable in whole or in part of the acts, errors, negligence, omissions (including but not limited to the failure to observe Contractor's safety rules and all applicable laws, regulations and ordinances) or misconduct of Subcontractor, its agents, employees, Subcontractors or other party under Subcontractor's direction or control occurring in connection with the performance or failure of performance of the services of completion of the work contracted for herein provided that Subcontractor shall not be required to indemnify the Indemnities against any loss caused by the sole negligence of one or more of the Indemnities. This indemnity shall survive termination of the Agreement. Subcontractor accepts all risk of injury or damage and all responsibility for any claims or damages whatsoever resulting from the use, misuse, or failure of any hoist, rigging, blocking, scaffolding, or other like or unlike equipment used by Subcontractor or any Subcontractor, even though such equipment may be furnished or loaned to Subcontractor or any such Subcontractor by Contractor, and shall indemnify Contractor against all such claims.

12. CONTRACTOR'S RESPONSIBILITY FOR CERTAIN CASUALTIES

The Contractor shall be responsible for all damage to the work, including all materials and equipment owned by Contractor on or about the premises intended for permanent

use in the project or incidental to the construction thereof and included in the total cost of the work.

The Contractor may during the process of the work, maintain and pay for property insurance to cover the work during construction with such deductible as it may at its sole discretion choose or Contractor may at its sole option completely self-insure same.

If Subcontractor desires any other insurance, beyond that provided by Contractor to protect Subcontractor's temporary structures, materials, hand tools, machinery and equipment, Subcontractor may obtain and pay for same.

13. COMPLIANCE WITH LAWS AND ORDINANCES

Subcontractor shall give all notices and comply with all laws, ordinances, rules, and regulations, bearing on the conduct of the work as drawn and specified. If Subcontractor performs any work contrary to such law, ordinance, rule or regulations, Subcontractor shall bear all costs arising therefrom, in particular, but without limiting the scope of the foregoing. Subcontractor shall, and shall cause any Subcontractor, to comply with the terms and provisions of the Occupational Safety and Health Act of 1970, Mine Safety and Health Act of 1977 (where appropriate) and all applicable rules, regulations, orders and occupational safety and health standards promulgated under and issued pursuant to such Acts in the discharge of its duties and obligations hereunder. If for any reason Subcontractor's or any Subcontractor's employees or agents acquire a status imposing liability on Contractor for employer's contributions or taxes under the Federal Insurance Contributions Act, the Federal Unemployment Tax Act, any State Unemployment Tax or Wage Protection Act, or any other Act, Subcontractor shall be exclusively liable for, and shall indemnify Contractor against, the same and agree to comply with all such laws and regulations so as to relieve Contractor from any and all liability therefor and from the responsibility of making reports or keeping records with respect thereto.

14. PATENTS

Subcontractor shall indemnify and hold harmless Contractor against and from any and all claims, losses, costs, damages, expenses, actions or other proceedings, growing out of or resulting from infringement of any patent by Subcontractor or any Subcontractor in the performance of this Contract, except that this provision shall not apply to patented articles or processes specified in drawings or specifications furnished by Contractor provided any such claim is not attributable to Subcontractor's negligence in the use of such patented articles or processes. This indemnity shall survive termination of the Contract.

15. CHANGES IN WORK

Contractor, without invalidating this Contract, may at any time order extra work or make changes by altering, adding to or deducting from the work. Such order may be made by Contractor on its own behalf or at the request of Subcontractor, upon discovery by Subcontractor of any discrepancy between the plans and the physical conditions encountered. If such extra work or changes involve a change in cost, the Agreement price shall be increased or decreased by the fair value thereof. Contractor will itemize the changes to be made and upon receipt of written notice of same, Subcontractor agrees to submit promptly to Contractor, in triplicate, an itemized statement of his calculations of the adjustment in the Agreement price resulting from the changes or extra work. This must be done before work on the change is begun unless Contractor gives written order to proceed immediately. No work or change shall be made, except by written order of Contractor and no claim for an addition to the Agreement price shall be valid unless the additional work was so ordered. Any dispute under this Article shall be subject to arbitration.

16. CONTRACTOR'S RIGHT TO TERMINATE AGREEMENT

If any proceeding is instituted by or against Subcontractor seeking to adjudicate a bankruptcy or insolvency, or seeking liquidation, winding up, reorganization, arrangement, adjustment, protection, relief or composition of it or its debts under any law relating to bankruptcy, insolvency or reorganization or relief of debtors or seeking the entry of an order of relief or the appointment of a receiver, trustee or other similar official for it or any substantial part of its property, or if Subcontractor shall admit its inability or fails to pay its debts generally, or shall make a general assignment for the benefit of its creditors, or if Subcontractor at any time should fail, refuse or neglect to supply enough properly skilled workmen or proper materials, or if he should fail to make prompt payments to Subcontractors or for material or labor, or disregard laws, ordinances or the instructions of Contractor, or otherwise be guilty of a substantial violation of any provision of this Agreement which Subcontractor shall have failed to correct promptly after service of written notice thereof by Contractor, then Contractor may, without prejudice to any other right or remedy, terminate the employment of Subcontractor for Subcontractor's default and take possession of the premise and of all materials, tools and appliances thereon and finish the work by whatever method Contractor may deem expedient. In such case, Subcontractor shall not be entitled to receive any further payment until the work is finished. If the unpaid balance of the Agreement price shall exceed all the general damages of Contractor caused by Subcontractor's default, including but not limited to any financial losses or expenses incurred or suffered by Contractor as a result of a delay in the completion of the work and expense of finishing the work and compensation of Contractor for Contractor's managerial and administrative services, such excess shall be paid to Subcontractor.

If such damages shall exceed such unpaid balance, Subcontractor shall pay the difference promptly to Contractor.

17. CONTRACTOR'S RIGHT TO TERMINATE AGREEMENT WITHOUT CAUSE

Contractor may at any time terminate Subcontractor's services under the Agreement for any reason whatsoever by giving Subcontractor not less than fifteen (15) days written notice of termination setting forth the effective date of termination. In the event of such termination, Contractor shall pay to Subcontractor (a) its reimbursable costs for services performed prior to the effective date of such termination, less payments previously paid by Contractor on account thereof, (b) all other reimbursable costs and expenses which Subcontractor may incur as a result of such termination, including relocation of Subcontractor's field personnel and such other costs and expenses as may be approved by Contractor, and (c) an equitable portion of the profit based upon the actual work performed at the time of termination less any payment on account of profit which had been previously made. Except as may be otherwise expressly provided herein, Subcontractor shall not be entitled to demand any damages, compensation or indemnity of any kind as a consequence of such termination.

18. CORRECTION OF WORK AFTER PAYMENT

Neither payment nor any provision in this Agreement shall relieve Subcontractor of responsibility for faulty materials or workmanship and Subcontractor shall remedy any defects due thereto and pay for any damage to other work resulting therefrom which shall appear within one (1) year from the date of completion of Subcontractor's work hereunder. Contractor shall give notice of observed defects with reasonable promptness. Any dispute under this Article shall be subject to arbitration.

19. ARBITRATION

If any controversy, claim, dispute or question shall arise between the parties in respect of the construction, meaning or effect of this Agreement or anything contained in it, or the rights and liabilities of the parties hereunder or otherwise in relation to this Agreement, then every such controversy, claim, dispute or question shall be decided by arbitration in accordance with the rules of the American Arbitration Association. This agreement to arbitrate will be specifically enforceable under the prevailing law of any court having jurisdiction. Notice of demand for arbitration will be filed in writing with the other party and with the American Arbitration Association. The demand for arbitration will be made within a reasonable time after the controversy, claim, dispute or question has arisen, and in no event shall any such demand be made after the date when institution of legal or equitable proceedings based on such controversy, claim, dispute or question would be barred by the applicable statute of limitations. An award rendered pursuant to arbitration will be final and judgment may be entered in any court having jurisdiction thereof.

20. SUBCONTRACTS

Subcontractor will not employ any Subcontractor without the prior written approval of Contractor and Subcontractor shall require each Subcontractor to execute an Agreement in writing containing provisions similar to all provisions of this Agreement which are in any way applicable to such Subcontractor and which will obligate such Subcontractor to comply with and perform all such provisions herein. Nothing herein shall create a contractual relationship between any Subcontractor and Contractor.

21. ASSIGNMENT

Subcontractor shall not assign nor subcontract this Agreement in whole or in part, nor shall Subcontractor assign any moneys due or to become due Subcontractor hereunder without the prior written consent of Contractor.

22. COORDINATION OF WORK

Subcontractor shall conduct the work hereunder so as to cause a minimum of interference with Contractor's operation. Where interference with Contractor's operations becomes absolutely necessary, permission shall be requested by Subcontractor not less than seventy-two (72) hours in advance.

23. UNDERTAKINGS BY CONTRACTOR

Contractor agrees to obtain and pay for any permits, licenses and easements required for permanent structures or changes, and, to the extent practicable without interference with operations, to furnish Subcontractor, free of charge, for its use during the construction electricity, water, steam and compressed air required for construction purposes, at the voltage and pressure currently available at Contractor's said facility, to a point adjacent to or within 500 feet of the site, but Subcontractor will be required to make the necessary connections, provide approved shut-off and safety devices and furnish and install all temporary lines required to bring them to the point of use.

24. APPLICABLE LAW

This Agreement shall be construed and enforced in accordance with the laws of the state where the work hereunder is to be performed.

25. TECHNICAL INFORMATION

The term "technical information" as used in this agreement includes, but is not limited to technical data, reports, models, drawings, specifications, operating manuals, designs, computations, formulas, apparatus, processes, patentable or

unpatentable inventions and other engineering data. Subcontractor agrees to accept Contractor's decisions as to whether any particular information is technical information or is technical information that has been made or conceived under this agreement.

It is understood that in the course of Subcontractor's performance hereunder, Subcontractor may learn or have access to technical information of Contractor. Subcontractor agrees that Subcontractor or Subcontractor's personnel will keep in confidence all such technical information of Contractor and that Subcontractor and that Subcontractor's personnel will not use or disclose the same without Contractor's written consent, either during the term of this agreement or at any time thereafter.

Subcontractor agrees to disclose to Contractor all technical information made or conceived by you or your personnel in performance, or resulting from performance, under this agreement. Subcontractor agrees that all such technical information made or conceived by Subcontractor or Subcontractor's personnel shall become and remain the free and unrestricted property of Contractor and that you shall assign or cause the same to be assigned to Contractor. Subcontractor or Subcontractor's personnel agree to keep in confidence all such technical information made or conceived by Subcontractor or Subcontractor's personnel and that Subcontractor or Subcontractor's personnel will not use or disclose the same without Contractor's written consent, either during the term of this agreement or at any time thereafter.

Subcontractor or Subcontractor's personnel agree, upon the request and at the expense of Contractor, to make or cause Subcontractor's personnel to make applications for Letters of Patent in such countries as Contractor may designate on those of the aforesaid assigned inventions which Contractor believes to be patentable; and to assign all such applications to Contractor or its order; and to give Contractor, its attorneys and solicitors all reasonable assistance in preparing such applications, and in prosecuting such applications in the patent office or offices involved and in defending and enforcing any patent that may be issued upon any such application; and to execute all papers that may be reasonable required in the prosecution of such applications or to vest in Contractor or its assigns said inventions, applications and Letters of Patent.

26. FORCE MAJEURE

Neither party shall be considered in default in the performance of its obligations hereunder to the extent that performance of such obligations is delayed, hindered, or prevented by force majeure. Force majeure shall be any cause beyond the control of the parties hereto which they cannot reasonably have foreseen and guarded against. Force majeure includes but is not limited to, acts of God, labor disputes, financial crisis, fires, riots, civil commotion or civil unrest, incendiarism, interference by civil or governmental authorities, and acts of war (declared or undeclared).

27. AUDIT

Contractor shall have the right, to be exercised in writing not later than six (6) months after receipt of final invoice, to have its auditors review such records of Subcontractor as may be necessary to substantiate calculations and figures utilized by Subcontractor in determining billing procedures and amount.

28. SOLICITATION OF EMPLOYEES

During the term of this contract and for one year thereafter, subcontractor shall not solicit or offer employment to any individual employed by or under contract to Contractor, or its affiliated and associated companies.

29. NOTICE

Whenever in this Agreement it is provided that notice or demand be given by either party to the other, such notice or demand shall be given in writing and forwarded by certified or registered mail addressed as follows:

To Contractor at:
Mr. Michael R. Wignot, President
Hydrometrics, Inc.
3020 Bozeman Avenue
Helena, MT 59601

To Subcontractor at:
Mr. Pat Byrne
Pat Byrne Drilling, Inc.
245 Gerber Road
Great Falls, MT 59405

Any party to whom notice is required to be given may change such address by written notice by certified or registered mail to the other party.

30. ENTIRE AGREEMENT AND AMENDMENTS

This instrument contains the entire Agreement between the parties covering the subject matter. No modifications or amendments shall be valid unless in writing and signed by both parties.

31. SEVERABILITY

If any portion of this Agreement is found to be invalid or unenforceable, the validity of the remaining provisions of the Agreement shall not be affected.

IN WITNESS WHEREOF, the parties hereto have executed this Agreement.

SUBCONTRACTOR **(Pat Byrne Drilling, Inc.)**	**CONTRACTOR** **(Hydrometrics, Inc.)**
by: _____ Signature	by: _____ Signature
by: _____ Print Name	by: Michael R. Wignot Print Name
its: _____ Print Title	its: President Print Title
_____ Date	11/21/16 Date

EXHIBIT A

SCOPE OF WORK

Sand Coulee
Pump Installation for
Well #6

September 2016

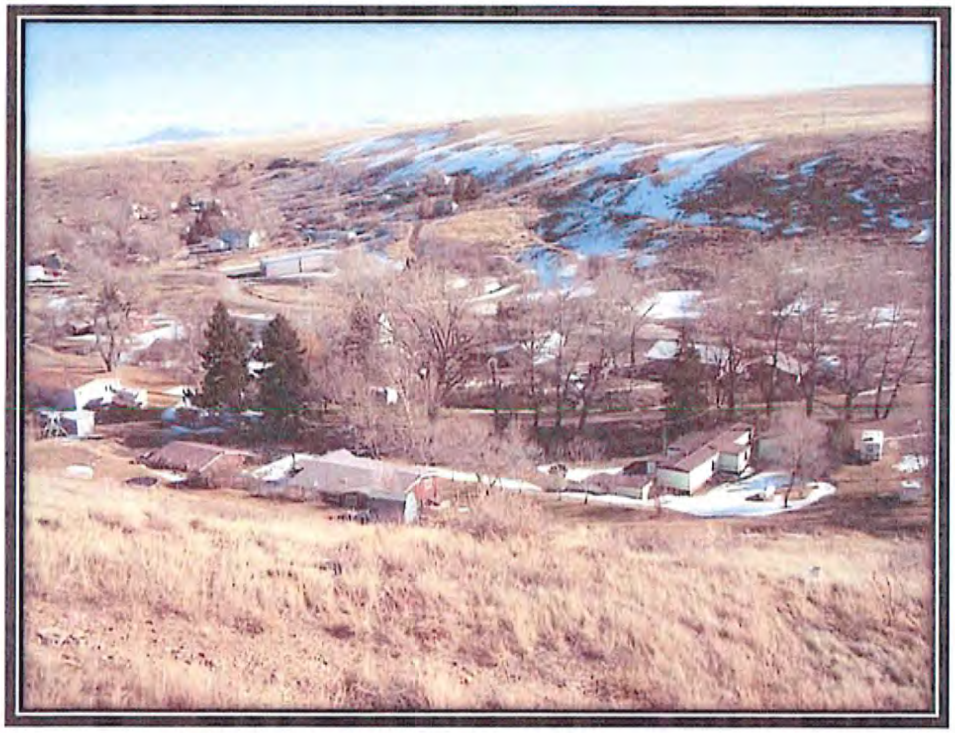

For
Sand Coulee Water District

TABLE OF CONTENTS

	Page No.
Scope of Work	1-4
00400 - Bid Form	1-3
00430 - Bid Bond	1-2
Notice of Award	1-1
Agreement	1-2
Section 11202 – Well Pump/VFD – Well No. 6	1-3
Grundfos Multi-stage Submersible Pump Product No. 13B63613 (Description 150S250-13)	1-10
Total Dynamic Head Calculations	1-1
CUE (VFD) Product No. 96754726 (Descirption CUE 3X380-500V IP55 22KW 44A/4)	1-4

STANDARD DRAWINGS

12 Well Sample Tap (Yard Hydrant)
W6 Well #6 Proposed Pump Installation

CONSTRUCTION DRAWINGS

W6-1 Water Tank Hill Site Plan
W6-2 Miscellaneous Details
W6-3 Drainage Berm & Hatch Drains

Scope of Work

Sand Coulee Pump Installation for Well #6

DEQ, Remediation Division

September 2015

Basic Scope

Installation Conditions:

1. The Sand Coulee water replacement project was completed in 2015 by Boland Construction. Well #5 was fully functional at this time and has been serving the District for water supply. In July of 2016 a second well (well #6), was drilled and 8" diameter steel casing was installed. This well #6 was test pumped and approved. At this time, with this projected project, well #6 will require the installation of the following: a new pump and VFD that are identical to what is installed with well #5 (see pump spec and VFD spec), drop pipe, transducer, frostless hydrant, 3" PVC connection pipe to existing transmission pipe, vented well cap, pitless adapter, connections made to existing power supply and control cabling. These specific items will be further specified. Ultimately contractor will need to complete all remaining, electrical, mechanical and subsequent control to allow well #6 to function and operate.

   FYI- Chris Boland drilled well #6. United Electric of Great Falls provided the electrical subcontracting for original water project. Terrex Industries provided the control and panel equipment.

2. Federal Abandoned Mine Land Program funds are being used for payment of Contractor's services provided under this contract. Bidder must comply with federal wage rate provisions inclusive of Davis Bacon wage rates.

3. Contractor will coordinate one call locaters. Contractor will provide all excavation and 95 % density for his compacted backfill at the well site for any water, electrical or control features needed.

4. System control and access. Well #5 is the current primary water source for the system. Contractor will coordinate this project's work effort to bring well #6 on line; and allow current well #5 and storage tank to operate and provide the District with potable water during this construction.

5. Items supplied by Owner: On site and available for contractor are the frostless hydrant, power and control equipment at well site, and the well transducer and conductors.

6. Contractor will schedule and coordinate work efforts with the Engineer (NCI Engineering, Great Falls 453-5478) and/or Sand Coulee Water District (Kent Luoma 590-5183 is the District's representative in the field). The Owners representative for any contractual obligations will be Tom Henderson with Abandoned Mines Land, DEQ 444-6492.

7. Contractor will execute the bid form and present the full package to Tom Henderson, either by mail to Department Environmental Quality, Remediation Division, PO box 6969 Helena, Mt 59604-6969 or hand deliver to 1520 East Sixth Avenue, Metcalf Rm 3, Helena, MT.

8. WAGE AND BENEFIT REQUIREMENTS
   Both State and Federal wage rates and related regulations apply to this project. Certain applicable legal requirements, including labor standards, are identified in Part II of the Supplementary Conditions (see following), and recent prevailing wage rate publications are attached to Part II of the Supplementary Conditions. It is the responsibility of the Contractor to pay required wage rates and comply with all other legal requirements for fringe benefits, hours, and working conditions. The rates applicable to this project will generally be the rates specified for Building, Heavy and Highway Construction. The rates specified are minimum rates, and where the federal rate differs from the state rate, the higher of the two will be the required minimum. Bidder should, if uncertain of legal requirements or applicable rates for this project or certain categories of workers, seek clarification from the Montana Department of Labor and Industry, Employment Relations Division (phone 406-444-5600 / http://erd.dli.mt.gov/labor-standards/stateprevailing-wage-information/current-prevailing -wage-rates.html).

LABOR STANDARDS (Supplementary Conditions)

2.1 FEDERAL CONTRACT WORK HOURS AND SAFETY STANDARDS ACT. CONTRACTOR will be required to comply with all applicable provisions, of 40 U.S.C. §§ 3701 et. Seq., as supplemented by Department of Labor regulations at 29 C.F.R. Part 5. Among other things, this Act provides that no Contractor or Subcontractor contracting for any part of the Work shall require or permit any laborer or mechanic to be employed on the Work in excess of 40 hours in any work week unless such laborer or mechanic receives compensation at a rate not less than one and one-half times his/her basic rate of pay for all hours worked in excess of 40 hours in such work week.

2.2 FEDERAL DAVIS-BACON ACT. CONTRACTOR will be required to comply with all applicable provisions of this Act, 40 U.S.C. §§ 3141 et. Seq., as supplemented by Department of Labor regulations at 29 C.F.R. Part 5. CONTRACTOR and all Subcontractors shall pay to all laborers and mechanics employed for the construction covered by this Contract the minimum rates of pay as determined by the Secretary of Labor in accordance with this Act. Except as may be otherwise required by law, all claims and disputes pertaining to the classification of labor employed on the project under this Contract shall be decided by the governing body having jurisdiction.

2.3 FEDERAL COPELAND "ANTI-KICKBACK" ACT. CONTRACTOR will be required to comply with all applicable provisions of this Act, 18 U.S.C. § 874 and 40 U.S.C. §§ 3145, as supplemented by Department of Labor regulations at 29 C.F.R. Part 3. CONTRACTOR and all Subcontractors shall furnish OWNER with weekly Statements of Compliance. In case of Subcontracts, CONTRACTOR will cause appropriate provisions to be inserted in all subcontracts for the Work which CONTRACTOR may let to insure compliance with said Anti-Kickback Act by all Subcontractors subject thereto, and CONTRACTOR shall be responsible for the submission of all Statements of Compliance required of Subcontractors by said Anti-Kickback Act except as the Secretary of Labor may specifically provide for reasonable limitations, variations, and exemptions from the requirements thereof.

2.4 MONTANA PREVAILING WAGE RATE REQUIREMENTS. CONTRACTOR must comply with the requirements for payment of wages set out in Title 18, Chapter 2, Part 4, MCA. The CONTRACTOR agrees to pay required wage rates and comply with all other legal requirements for fringe benefits, hours and working conditions. The rates applicable to this project will generally be the rates specified for heavy construction, highway construction, and building construction. The rates specified are minimum rates, and where the federal rate differs from the state rate, the higher of the two will be the required minimum.
Bidder should, if uncertain of legal requirements or applicable rates for this project or certain categories of workers, seek clarification from the Montana Department of Labor and Industry, Employment Relations Division (phone 406-444-5600 / http://erd.dli.mt.gov/). If CONTRACTOR employs any person in a trade or occupation not classified in the wage determinations, such person will be paid at not less than such rates as will be determined by the Montana Department of Labor and Industry. Such approved minimum rate will be retroactive to the time of the initial employment of such person in such trade or occupation. CONTRACTOR will notify OWNER of its intention to employ persons in trades or occupations not classified in sufficient time to obtain approved rates for such trades or occupations.
Under § 18-2-406, MCA, CONTRACTOR must post in a prominent and accessible location at the site, not later than the first day of work, a legible statement of all wages to be paid to employees employed at the site. Under § 18-2-423, MCA, any employees receiving an hourly wage are to be paid on a weekly basis.

2.5 MONTANA RESIDENT LABOR. In accordance with the requirements of §§ 18-2-403 and 409, MCA, CONTRACTOR and all of its subcontractors will give preference to the employment of bona fide Montana residents in the performance of the Work. At least 50% of the Work must be performed by bona fide Montana residents, as defined in § 18-2-401, MCA.

Bid schedule measurement and payment:

Note for all bid items: Merge the cost of mobilization/ bonds and insurance into the other bid items.

Bid Item 101: Provide the excavation and backfill for all new piping and electrical install needed. This bid item includes all labor and materials for backhoe, operator, laborer with hand tools and probes for careful probing of existing connection points. Backfill and compact existing material to 95% of ASTM D698 maximum dry density. Contractor will leave surface clean of any rock bigger than 2" and finish dress the surface area. New gravel surface replacement, is by bid item 107. Also include in this item, the work to install the drainage mitigation berm at the lower end of the tank hill road as per detail. Lump sum.

Bid Item 102: Provide and install the new submersible pump and the 3" galvanized drop pipe as specified. Chlorination and disinfection of the well. Provide two check valves one internal with pump and one check valve in drop piping at 214 bgs. This bid item includes the furnishing and installing and startup. Lump sum.

Bid Item 103: Provide and install the new VFD and electrical connections as specified. This bid item includes the furnishing and installing and startup. Lump sum.

Bid Item 104: Provide and install the new miscellaneous well items as specified. These items will include vented well cap, mounded soil and concrete surface seal, pitless adapter, (Owner furnished transducer and transducer cable for inside well and to j-box), and transducer conduit (chase) in well casing. This bid item includes the furnishing and installing and startup. Lump sum

Bid Item 105: Provide the miscellaneous mechanical as specified. These items include the install the (Owner furnished) frostless hydrant, ¾" HDPE piping for hydrant, the saddle and corporation for hydrant, and the 3" PVC CL 160 well pipe feed and connection to existing well piping. Provide new hatch drains on three existing concrete structures as detailed. This bid item includes the furnishing and installing. Lump sum.

Bid Item 106: Provide the electrical effort to make all connections at well house and at well for pump power supply, VFD, and transducer cable and control conductor connections. This bid item will be responsible for final control and operation of the new well pump. This bid item includes the furnishing and installing and startup. Lump sum.

Bid Item 107: Provide and install gravel surfacing restoration for the area shown on plan sheet W6-1. This bid item will include the 1.5" minus crushed base course gravel surfacing material installed at 6" compacted depth with a 12' wide geotextile (woven) fabric (Propex geotex 315ST product or approved equal) on the subgrade installed prior to gravel. This new surfacing will be installed flush to existing surfaces to not cause storm runoff blockage. Include the necessary excavation for grading and compaction effort. This bid item will be measured by the square yards furnished and installed.

Payment for Services

- Invoices or requests for payments will be submitted to project engineer.
- 1% of the total of each invoice will be retained for payment of Contractor's Gross Receipts Tax.
- Payment will be made within 60 calendar days of engineer's approval. Every effort will be made on the part of the District and the Engineer to expedite payment.

Sand Coulee Pump Installation for Well #6

BID FORM

ARTICLE 1 - BID RECIPIENT

This Bid is submitted to:

Department of Environmental Quality
Remediation Division
(See scope of work for address)

ARTICLE 2 - BIDDER'S REPRESENTATIONS

3.01 In submitting this Bid, Bidder represents, as set forth in the Scope of Work, that:

A. Bidder has examined and carefully studied the Scope of Work.

B. If in Bidder's judgment, any local condition may affect cost, progress or the furnishing of Goods and Services, Bidder has visited the site and become familiar with and is satisfied as to the local conditions that may affect cost, progress, or the furnishing of Goods and Special Services.

C. Bidder is familiar with and is satisfied as to all federal, state and local Laws and Regulations that may affect cost, progress and the furnishing of Goods and Special Services.

D. Bidder has carefully studied and correlated the information known to Bidder, and information and observations obtained from Bidder's site visits, if any, with the Bidding Documents.

E. Bidder has given Engineer formal notice of conflicts, errors, ambiguities, or discrepancies that Bidder has discovered in the Bidding Documents, and formal resolution thereof by Engineer is acceptable to Bidder.

F. The Bidding Documents are generally sufficient to indicate and convey understanding of all terms and conditions for furnishing the Goods and Special Services for which this Bid is submitted.

ARTICLE 3 - BASIS OF BID

4.01 Bidder will furnish the Goods and Special Services in accordance with the Contract Documents for the following price(s):

BID SCHEDULE

BID

Item No.	Estimated Quantity	Unit	Name of Pay Item with Unit Bid Price Written In Words	Unit Price	Amount Bid
101	1	LS	Excavation and Backfill		
at _____				Per LS _____	_____
102	1	LS	New Submersible Pump		
at _____				Per LS _____	_____
103	1	LS	New VFD		
at _____				Per LS _____	_____
104	1	LS	Miscellaneous Well Items		
at _____				Per LS _____	_____
105	1	LS	Miscellaneous Mechanical		
at _____				Per LS _____	_____
106	1	LS	Electrical		
at _____				Per LS _____	_____
107	160	SY	Gravel Surface Restoration		
at _____				Per SY _____	_____

Total Bid Amount (Items 101-107) $\$$ _____
(Figure)

ARTICLE 4- TIME OF COMPLETION

Bidder agrees that the furnishing of Goods and Special Services will be completed within 14 days of Notice to Proceed. Contractor will be allowed to have Pump and VFD on site before NTP is provided.

ARTICLE 5 - ATTACHMENTS TO THIS BID

The following documents are attached to and made a condition of this Bid: Required Bid security as required by MCA 18-2-201 **if bid is over $50,000**

ARTICLE 6 - BID SUBMITTAL

This Bid submitted by:

Name: _____

By: _____
(Signature -- attach evidence of authority to sign)

Name (typed or printed): _____

Title: _____

Attest _____

Business address: _____
_____

Phone: _____ Facsimile: _____

Notice of Award

Dated _____

Project: **Sand Coulee Pump Install For Well #6**	Owner: **DEQ, Remediation Division**	Owner's Contract No.: 414006
Contract:		Engineer's Project No.: **1204**

Bidder: _____

Bidder's Address: (send Certified Mail, Return Receipt Requested)

You are notified that your Bid dated _____ for the above Contract has been considered. You are the Successful Bidder and are awarded a Contract for Sand Coulee Pump Install for Well #6.

The total Bid Price of your Contract is **$0000.00**.

_____
Owner

By: _____
Authorized Signature

_____
Title

Copy to Engineer

EJCDC No. C-550 (2002)
Prepared by the Engineers' Joint Contract Documents Committee and endorsed by the Associated General Contractors of America and the Construction Specifications Institute.

AGREEMENT

This Agreement is dated as of the _____ day of _____ in the year **2016** by and between **DEQ, Remediation Division** hereinafter called OWNER and **Contractor** hereinafter called CONTRACTOR. OWNER and CONTRACTOR, in consideration of the mutual covenants hereinafter set forth, agree as follows:

Article 1. WORK:

1.01 CONTRACTOR shall complete all Work as specified or indicated in the Proposal. The Work is generally described as "Field Investigation Work".

1.02 Article 2. THE PROJECT: The project consists of work described in the attached Scope of Work.

Article 2. ENGINEER:

The Proposal form was prepared by: **NCI Engineering Co., 4509 North Star Boulevard, P.O. Box 6350, Great Falls, MT 59406**

who is hereinafter called Engineer and who is to act as Owner's representative, assume all duties and responsibilities and have rights and authority assigned to ENGINEER by the Owner.

Article 3. CONTRACT TIME:

Time of the Essence

A. All the limits for milestones, if any, Substantial Completion, and completion and readiness for final payment as stated in the Contract Documents are of essence of the Contract.

B. All work shall be completed as weather allows. No work is anticipated when temperatures are below 15 degrees F.

C. There will be no Liquidated Damages

Article 4 CONTRACT PRICE

Owner shall pay Contractor for completion of the Work in accordance with the Contract an amount equal to the sum of the established unit price for each separately identified item of Unit Price Work times the quantity of that item that is constructed and accepted. Unit prices are those listed in the Unit Price Schedule of the Bid Form. Estimated quantities used for bidding purposes are not guaranteed, payment will be for actual quantities as determined by Engineer and Contractor.

Article 5. PAYMENT PROCEDURES:

6Submittal and Processing of Payments

A. Contractor shall submit Applications for Payment to Engineer. Applications for Payment will be processed by Engineer.

B. Owner shall make one payment at the end of the work on the basis of Contractor's Application for Payment as agreed upon by the Engineer and Contractor. No retainage will be held.

C. Payment will be made within 45 days of submittal of the pay request. All moneys not paid when due as provided herein shall bear interest at the maximum rate allowed by law at the place of the Project.

Article 6. CONTRACTOR'S REPRESENTATIONS:

Contractor makes the following representations:

A. Contractor has examined and carefully studied the Scope of Work.

B. Contractor has visited the site and become familiar with and satisfied as to the general, local and Site conditions that may affect cost, progress, performance or furnishing of the Work.

C. Contractor is familiar with and is satisfied as to all federal, state, and local Laws and Regulations that may affect cost, progress, performance and furnishing of the Work.

D. Contractor is aware of the general nature of work to be performed by OWNER and others at the site that relates to the Work as indicated in the Contract Documents.

E. The Contract Documents are generally sufficient to indicate and convey understanding of all terms and conditions for performance and furnishing of the Work.

IN WITNESS WHEREOF, Owner and Contractor have signed two (2) copies of Agreement, One (1) counterpart has been delivered to owner, one (1) to Contractor. This Agreement will be effective on _____, 2016 (which is the effective date of the Agreement).

Owner DEQ, Remediation Division_____ Contractor _____

By_____ By_____
(Signature) (Signature)

Attest_____ Attest _____
(Signature) (Signature)

SECTION 11202

WELL PUMP/ VFD – WELL NO. 6

PART 1 GENERAL

1.1 WORK

The work of this section consists of providing and installing new well pump, drop pipe, electrical power cable, and other materials and labor required for complete pump installation and power and control connection (see also plan dwg.s). Also, this section includes providing and installing new VFD to operate the pump. Both the new pump and VFD will match existing pump and VFD now installed in Well #5. The technical data on the pump and VFD from Well #5 is provided following this section.

Submittals: Submit four copies of the following:

Shop Drawings

a. Submittals will include certified performance curves by the pump manufacturer. Shop drawings will include detailed plans of the pumping equipment and diagrams indicating all electrical connections and wiring.

Operation and Maintenance Literature

a. As soon as practical after the approval of the shop drawings, and not later than 15 days prior to completion of the well, the Contractor will submit complete operation and maintenance literature including a complete list of parts and supplies and source of supply.

1.2 MISCELLANEOUS EQUIPMENT

Submersible Cable

1. Sufficient length of rubber-sheathed jacketed cable will be provided for a water-tight electrical service to the motor with 20 feet additional length above the top of the well casing. The cable will be continuous length from the pump motor to the electrical junction panel. The size of the required submersible cable will be suitable for the horsepower of the submersible motor provided.

1.3 INSTALLATION

Submersible pump cables will be securely attached to the pump column every 10 feet using tape or other method approved by Engineer. All submersible cables will be tested for leakage or shorts by use of an ohmmeter and corrected if not within the tolerance recommended by the manufacturer.

Pump Column and Monitoring Pipe

1. Pump Column (well pump drop pipe), Transducer (Installation only).

   The pump column will be 3-inch minimum diameter; length as required to set pump 430' BGS, as specified herein, galvanized steel pipe with threaded connections. The pipe will be furnished in 20-foot, 10-foot, and/or one random length, connected by threaded sleeve couplings, as needed to position the pump inlet at the depth below the top of the pitless unit casing specified by Engineer. The Contractor will install a 1½ inch PVC carrier pipe attachment to the pump column to house the transducer and facilitate future removal of the transducer. Transducer will be placed at pump intake depth. ¼ inch holes will be drilled every 6 inches in the bottom 10' of carrier pipe. Transducer and cable are furnished by Owner.

1.4 WELL DISINFECTANT

1. Chlorine compounds approved by Federal, state or local regulatory agencies will be used as disinfectants. The disinfectant will be delivered to the site of the work in original closed containers. Chlorine compounds in dry form will not be stored for more than one year and storage of liquid compounds will not exceed 60 days. During storage, disinfectants will not be exposed to the atmosphere or to direct sunlight. Unless superseded by government regulation, the quantity of chlorine compounds used for disinfection will be sufficient to produce a minimum of 50 mg/l (milligrams per liter) available chlorine in solution when mixed with the total volume of water in the well. A 50 mg/l solution should result from utilizing quantities of chlorine compounds, proportioned to the depth of water, as listed in the chlorination table. The solution will contain enough chlorine to leave a residual or 50 parts per million throughout the well for a period of 24 hours.

Chlorine Compound to Dose 100 Feet of Water-Filled Well at 50 mg/l				
Casing Diameter (inches)	Volume per 100 feet (gallons)	70% HTH Per-chloron, etc. (dry weight)	25% Chloride of Lime (dry weight)	5.25% Purex Clorox, etc. (liquid measure)
8	261.1	3 oz.	7 oz.	2 1/8 pts.

Disinfection Procedure

2. Upon completion of development and cleaning, and before the test pump is installed, the Contractor will circulate the disinfecting agent mixture through the drill pipe or through tubing into the well in the required amount. The drill pipe or tubing will discharge the disinfecting agent at a point 2 feet above the bottom of plug on the tailpipe or screen assembly.

3. When the specified amount of disinfecting agent has been agitated into the well, the drill pipe or tubing will be withdrawn from the well. After the drill pipe or tubing has been withdrawn, the Contractor will pump or pour into the well a volume of disinfecting agent equal to the interior volume of the well screen assembly to further displace the disinfecting agent in the formation around the well. The Contractor will pour or pump the additional disinfecting agent into the well in such a manner as to wet those portions of the well above the static water level with disinfecting agent.

4. The disinfecting agent will be left in the well for a period of at least 24 hours. This may include the period of time during which test pump installation is accomplished.

5. After a 24 hour or longer contact period, the well will be cleared of disinfecting agent prior to connection to the well house piping.

6. The Contractor will install a small hose bib on the test pump discharge pipe so that a hose can be used to spray disinfecting agent into the top of the well during pre-test pumping. The Contractor will spray disinfection agent into the top of the well during pre-test pumping to wet the parts of the pump column and well casing above the static water level with disinfecting agent.

7. The disposal point for the purged water will be selected so as to minimize potential damage to aquatic life or vegetation.

1.6 PUMP TEST

1. Contractor will test pump the new well pump to confirm the pump system operates according to these specifications.

END OF SECTION

GRUNDFOS

Company name:
Created by:
Phone:

Date: 7 7 201

Position	Count	Description
	1	**150S250-13**

Product photo could vary from the actual product

Pr d N . 13B 3 13
M - r r r
r d r r d r r .T
r - r
d d r r r .

T d r S
DIN W.-Nr. EN 1.4301 d r
r d r .
T d - -r r .

T r 3- r d
d d d- r d r
d r r - d r .

Liquid:

P d d	W r
M d r r	104 F
M d r r 0.15	104 F
L d	8 F
D	2.2
K	1 S

Technical:

S d r d	3450 r
A d	1 5 US
R d	455
S r r	SIC SICNBR
C r r	ISO 0 2012 3B
M r r	T40

Materials:

P	S EN 1.4301 AISI 304
I r	S EN 1.4301 AISI 304
M r	S DIN W.-Nr. 1.4301 AISI 304

Installation:

M r r	870
P	3"NPT
M r d r	

GRUNDFOS

Company name:
Created by:
Phone:

Date: 7 7 201

Position	Count	Description
		Electrical data:
		M r — MS 000
		R d r - P2 — 24.81 HP
		— 25 HP
		M r — 0 H
		R d — 3 440-4 0-480 V
		S r r — 1.15
		R d rr — 41.0-40.0-3 .5 A
		S r rr — 540-5 0- 20
		— 217 A
		C - r r — 0.85-0.83-0.80
		R d d — 34 0-3480-34 0 r
		M r d — 84.5
		S r. d — d r - -
		E r (IEC 34-5) — IP 8
		I (IEC 85) — F
		B - r r r r
		Others:
		ErP — E P S d Pr d.
		N — 1 7
		Gr — 275
		S — 10.

GRUNDFOS

Company name:
Created by:
Phone:

Date: 7 7 201

13B63613 150S250-13 60 Hz

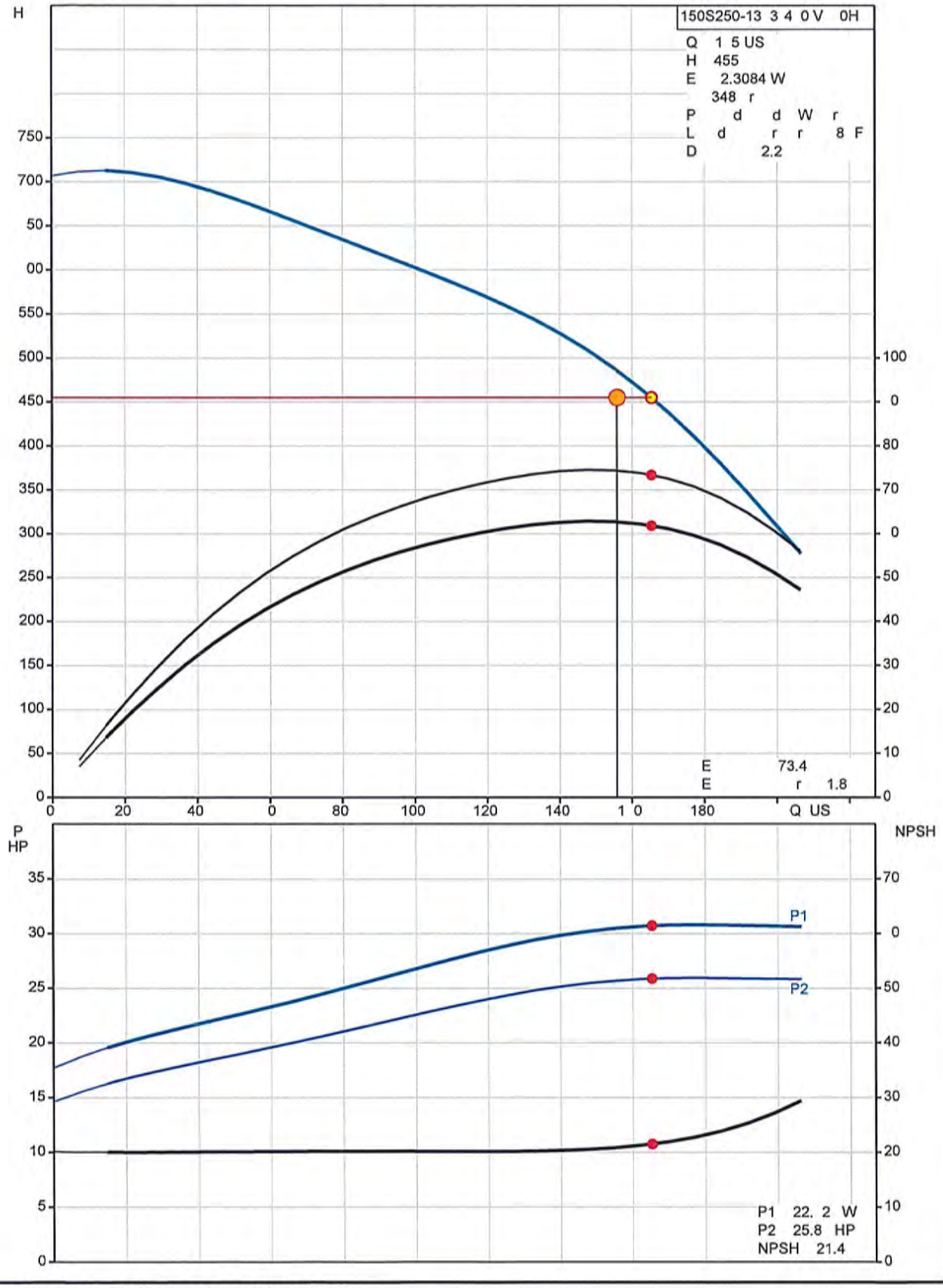

GRUNDFOS

Company name:
Created by:
Phone:

Date: 7 7 201

Description	Value
General information:	
Pr d	150S250-13
Pr d N .	13B 3 13
EAN	57003 1427831
Technical:	
S d r d	3450 r
A d	1 5 US
R d	455
I rr d .	NONE
S r r	SIC SICNBR
C r r	ISO 0 2012 3B
S	13
M d	B
V	YES
M r r	T40
Materials:	
P	S
	EN 1.4301
	AISI 304
I r	S
	EN 1.4301
	AISI 304
M r	S
	DIN W.-Nr. 1.4301
	AISI 304
Installation:	
M r r	870
P	3"NPT
M rd r	
Liquid:	
P d d	W r
M d r r	104 F
M d r r 0.15	104 F
L d	8 F
D	2.2
K	1 S
Electrical data:	
M r	MS 000
A . r	GRUNDFOS
R d r - P2	24.81 HP
	25 HP
KVA d	J
M r	0 H
R d	3 440-4 0-480 V
S r r	2
S r r	1.15
R d rr	41.0-40.0-3 .5 A
S r rr	540-5 0- 20
	217 A
C - r r	0.85-0.83-0.80
R d d	34 0-3480-34 0 r
A d	5 .5
M r d	84.5
S r. d	d r - -

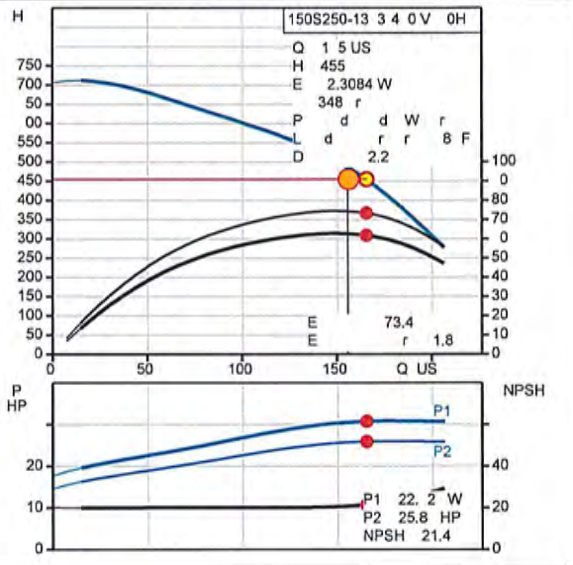

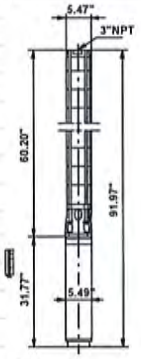

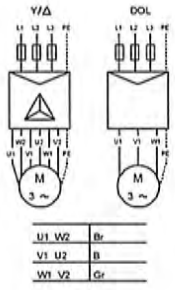

GRUNDFOS

Company name:
Created by:
Phone:

Date: 7 7 201

Description		Value
E r	(IEC 34-5)	IP 8
I	(IEC 85)	F
M r r		NONE
T r r		r
B - r r r r		
M rN r		1 1 7
C r		1 347
Controls:		
H r		K73
Others:		
ErP		E P S d Pr d.
N		1 7
Gr		275
S		10.
S r		N r

GRUNDFOS

Company name:
Created by:
Phone:

Date: 7 7 201

13B63613 150S250-13 60 Hz

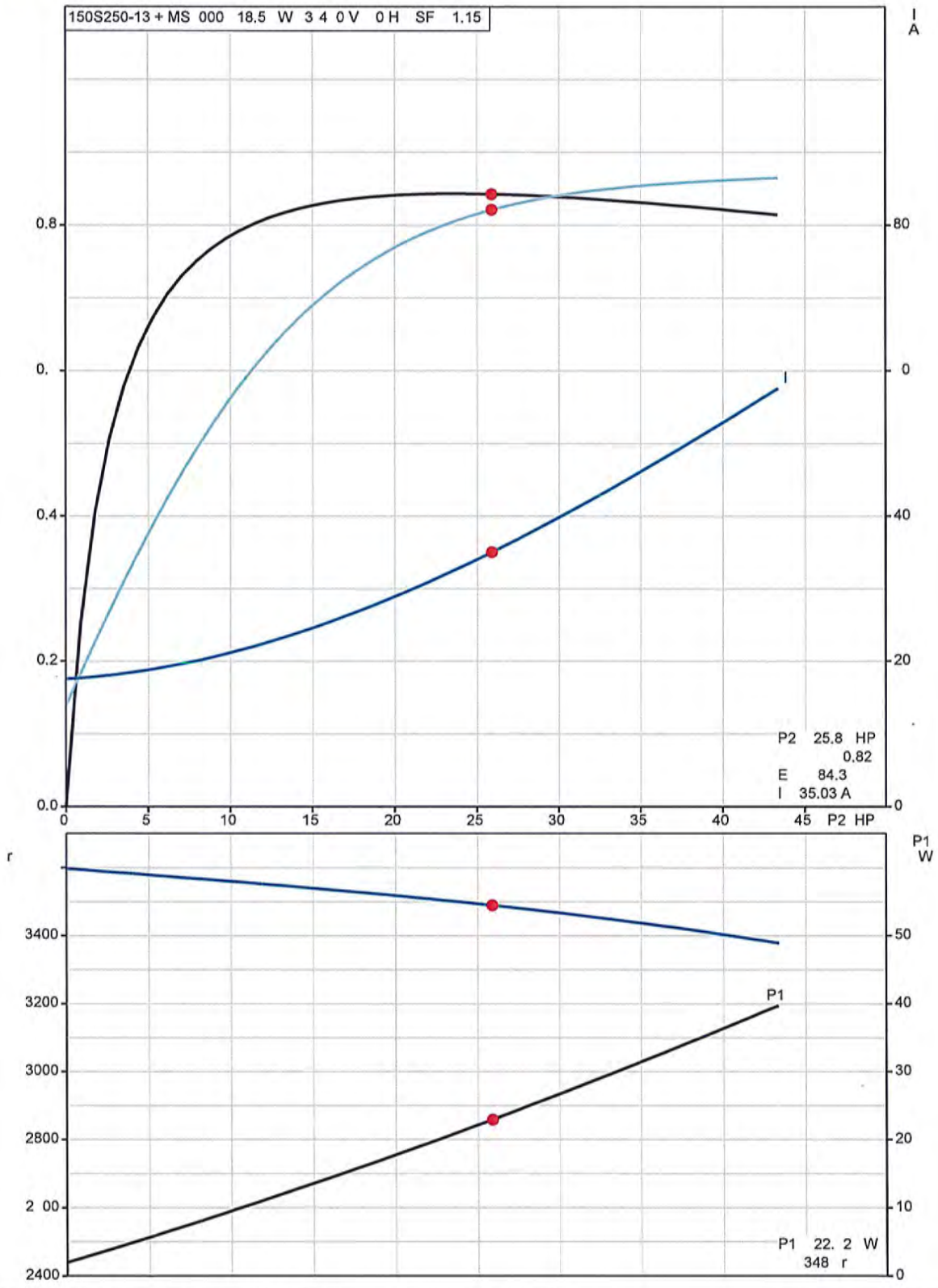

GRUNDFOS

Company name:
Created by:
Phone:

Date: 7 7 201

13B63613 150S250-13 60 Hz

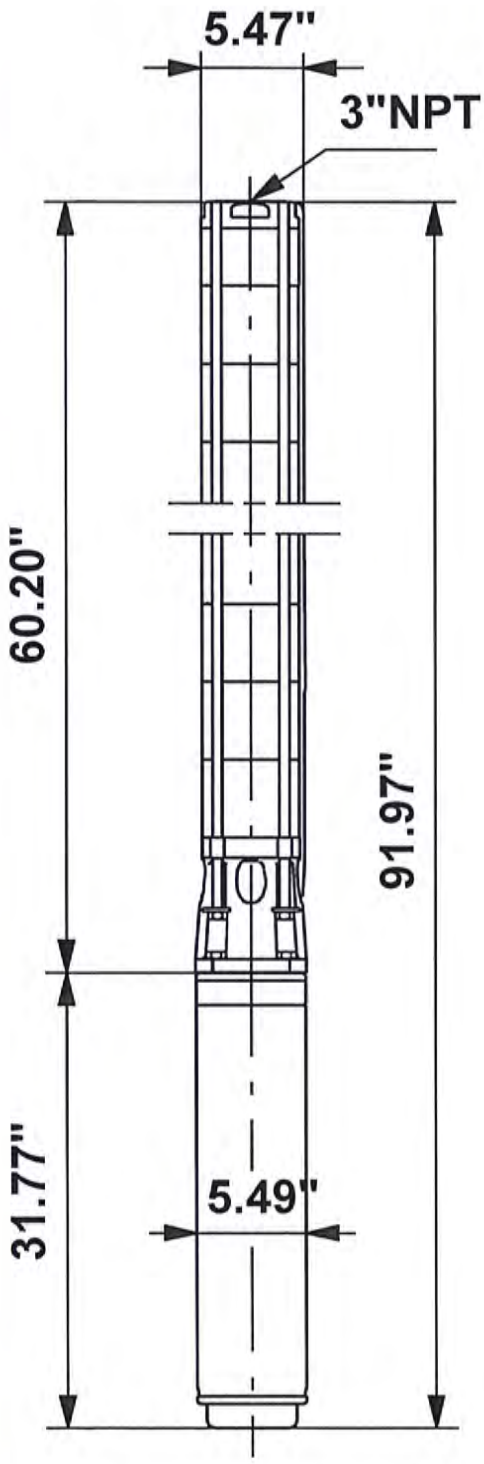

N A r r d.
D r T d d dr d d .

GRUNDFOS

Company name:
Created by:
Phone:

Date: 7 7 201

13B63613 150S250-13 60 Hz

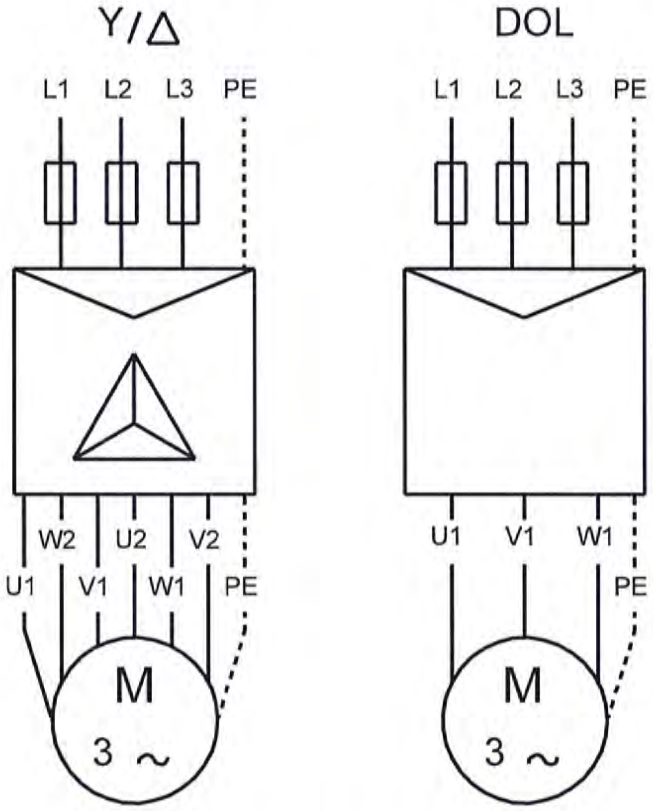

U1 W2	Br
V1 U2	B
W1 V2	Gr

A r r r d.

GRUNDFOS

Company name:
Created by:
Phone:

Date: 7 7 201

13B63613 150S250-13 60 Hz

Input

General

A	Gr d r
I	B r
I	W
F	15 US
H d	455
Pr r d r	N

Your requirements

S d r	N
M r r r	50 F
A d r	30
A d d r	5

Edit load profile

L d r	F d
O r d r r	3 5 d
O r r r d ( )	10

Configuration

P r	GG 0. 025 r 1.4301 (AISI 304)
M r	Gr d d rd r

Operational conditions

Fr	0 H
P	3
V	4 0 V
S r d 3	DOL
E r r ( )	0.12 W
E r r (d)	0.08 W
E r r ( )	0.04 W
I r r r	
C r d	10 r

Load profile

	1	
F	100	
H d	107	
P1	22.7	W
E	2.7	
T	3 50	
C	830	W Y r
Q	1	

Sizing result

T	150S250-13
Q M r 1	24.81 HP
F	1 5 US (+)
H	455
P r P1	22. 2 W
P r P2	25.8 HP
C rr (r d)	40 A
C rr ( )	35 A
C ( )	0.82
E	73.4
E r	84.3
E	1.8 E E r
F	341 7 70 r
S . .	2.4315 W 1000
	4.01 W
C	830 W Y r
Pr	O r
T	O r 10Y r
L	10Y r

C d d

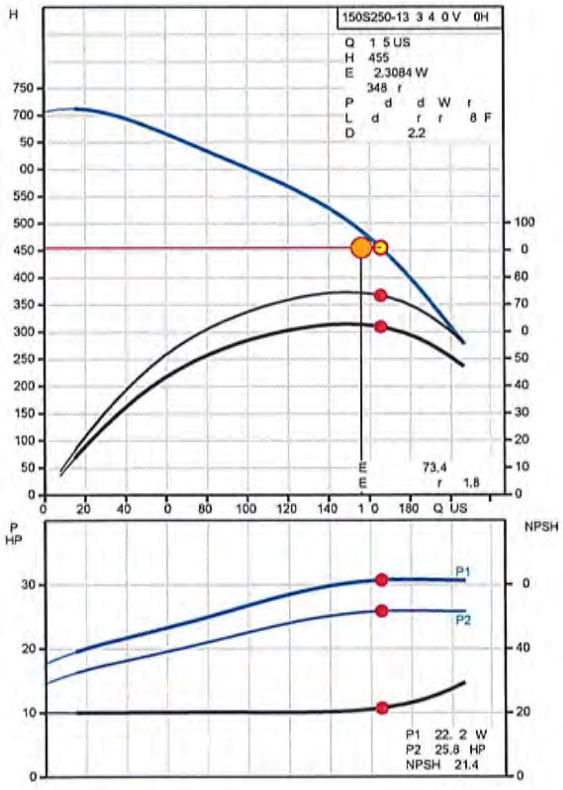

GRUNDFOS

Company name:
Created by:
Phone:

Date: 7 7 201

Installation and Input

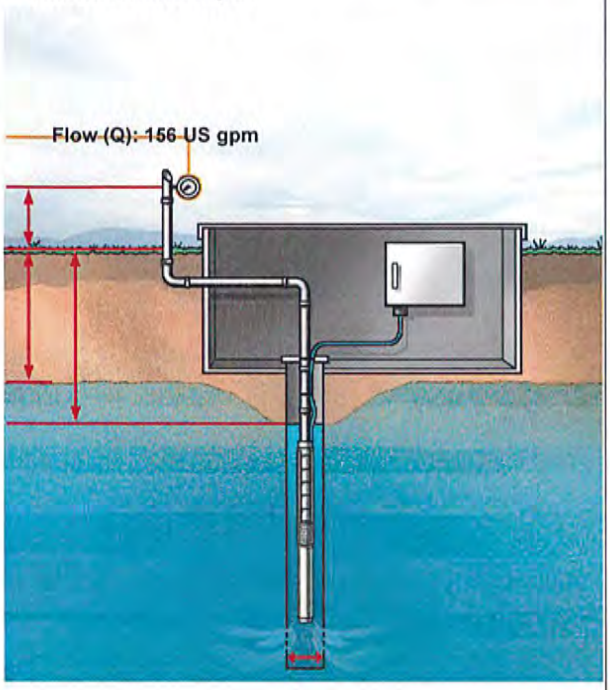

Sizing results

Pr d r	13B 3 13
T	150S250-13
F	1 5 US (341 7 70)
H	455
P r P1	22. 2 W
P r P2	25.8 HP
E	73.4
E r	84.3
E	1.8
C	830 W Y r
S . .	2.4315 W 1000 (4.01 W)
M r	MS 000
P	3
V	440-4 0-480
Fr	0 H
C rr (r d)	40 A
C rr ( )	35 A
C ( )	0.82
L d . r r	104 F

Pump curve

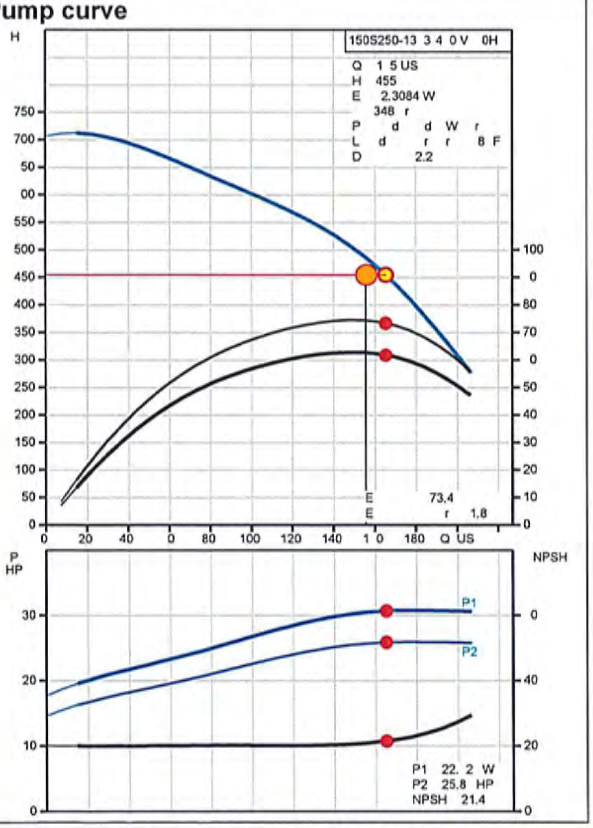

Dimensional drawing

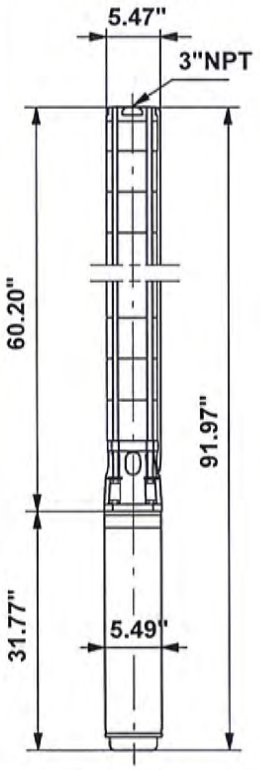

Total Dynamic Head Calculations

Friction Loss Calculations[1]

Component	Length	H_f
3-inch steel drop pipe (c=100)	430	49.2
3-inch CL 160 PVC pipe (c = 145)	14	0.8
6-inch C900 PVC (c = 145)	71	0.14
4-inch Ductile Iron (c = 100)[2]	37.7	0.75
6-inch Ductile Iron (c = 100	15	0.04
Total H_f	**568**	**51**

[1] Friction Loss calculated using the Hazen-Williams equation

[2] Additional equivalent length included to account for fittings

Vertical Lift

Component	Depth to Water (feet)	Elevation (feet)
Static Water Level	373	3316.5
Pumping Water Level	374	3315.5
Tank Water Level Elevation (max)	NA	3719
Vertical Lift (Tank WL Elev. - Pumping WL Elev.)		**404 ft**

Total Dynamic Head (Hf+Vertical Lift)	**455 ft**

Company name:	Northwest Pipe Fittings Inc.
Created by:	Scott Bond
Phone:	406-252-0142
Email:	sbond@northwestpipe.com
Date:	2/22/2016

Position	Count	Description
	1	**CUE 3X380-500V IP55 22KW 44A/4**

Product photo could vary from the actual product

Product No.: 96754726

CUE is a complete range of external frequency converters designed for speed control of a wide range of Grundfos pumps. CUE has a built-in PI controller and offers the same functionality and user-interface as Grundfos E-pumps. CUE solutions can thus be seen as an extension to the E-pump range.

By choosing a CUE-solution, you will get the following benefits:

- Grundfos E-pump functionality and user-interface
- application- and pump-family-related functions
- increased comfort compared to fixed-speed pumps
- very easy installation and commissioning compared to standard frequency converters
- speed control of pumps up to 250 kW
- speed control of pumps installed in potentially explosive environments.

CUE offers the following inputs and output:

- RS-485 GENIbus
- an analog 0-10 V input for external setpoint
- an analog 0/4-20 mA input for sensor
- four digital inputs for various functions, for instance external start/stop
- two signal relays (C/NO/NC).

Accessories:
Input/output add-on board
Provides additional input:

- one 0/4-20 mA analog input for an additional sensor
- one 0-20 mA analog output
- two inputs for Pt100/Pt1000 temperature sensors, for instance for bearing monitoring.

Motor filters:
For reduction of dU/dt and peak voltages to the motor windings and for reduction of the acoustic noise generated in the motor, a number of motor filters are offered:

- dU/dt filters , 11-250 kW
- Sine wave filters, 0.55-250 kW.

Technical:

Approvals on nameplate:	CE, CULUS, C-TICK

Installation:

Range of ambient temperature:	32 .. 113 °F
Relative humidity:	5-95 %

Electrical data:

Rated power - P2:	30 HP
Main frequency:	60 Hz
Rated voltage:	3 x 380 - 440 / 441 - 500 V
Rated current:	44-40 A
Maximum current consumption:	44 A
Efficiency at full load:	98 %
Enclosure class (IEC 34-5):	IP55

Others:

Label:	Grundfos Blueflux

Company name:	Northwest Pipe Fittings Inc.
Created by:	Scott Bond
Phone:	406-252-0142
Email:	sbond@northwestpipe.com
Date:	2/22/2016

Position	Count	Description	
		Net weight:	50.7 lb

Company name:	Northwest Pipe Fittings Inc.
Created by:	Scott Bond
Phone:	406-252-0142
Email:	sbond@northwestpipe.com
Date:	2/22/2016

Description	Value
General information:	
Product name:	CUE 3X380-500V IP55 22KW 44A/4
Product No.:	96754726
EAN:	5700838636246
Price:	On request
Technical:	
Approvals on nameplate:	CE, CULUS, C-TICK
Installation:	
Range of ambient temperature:	32 .. 113 °F
Relative humidity:	5-95 %
Mounted on:	Wall
Electrical data:	
Rated power - P2:	30 HP
Main frequency:	60 Hz
Rated voltage:	3 x 380 - 440 / 441 - 500 V
Rated current:	44-40 A
Maximum current consumption:	44 A
Efficiency at full load:	98 %
Enclosure class (IEC 34-5):	IP55
Motor protection:	YES
Thermal protec:	external
Cable length:	150/300 m
Others:	
Label:	Grundfos Blueflux
Net weight:	50.7 lb

Company name: Northwest Pipe Fittings Inc.
Created by: Scott Bond
Phone: 406-252-0142
Email: sbond@northwestpipe.com
Date: 2/22/2016

96754726 CUE 3X380-500V IP55 22KW 44A/4 60 Hz

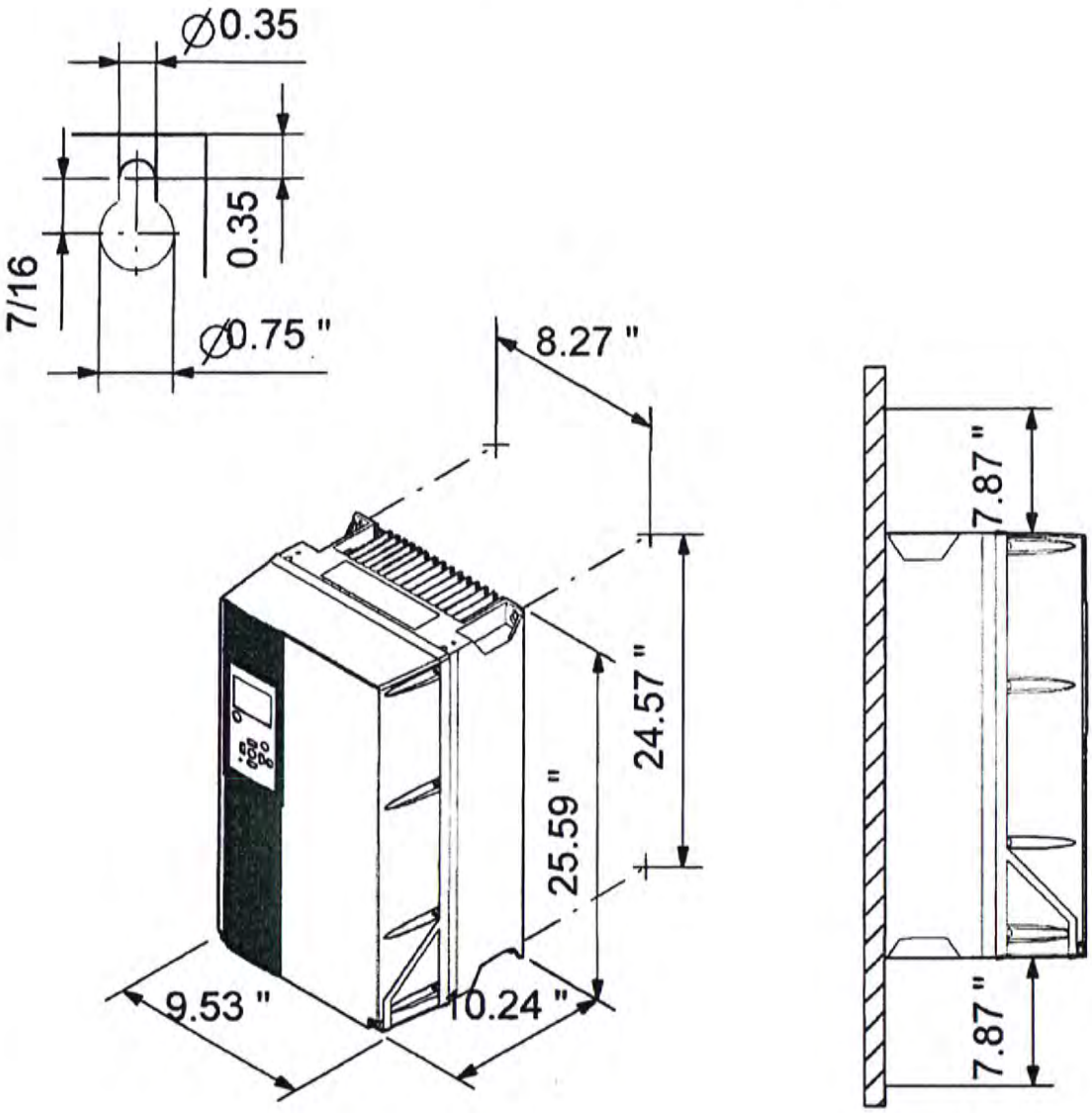

Note! All units are in [mm] unless otherwise stated.
Disclaimer: This simplified dimensional drawing does not show all details.

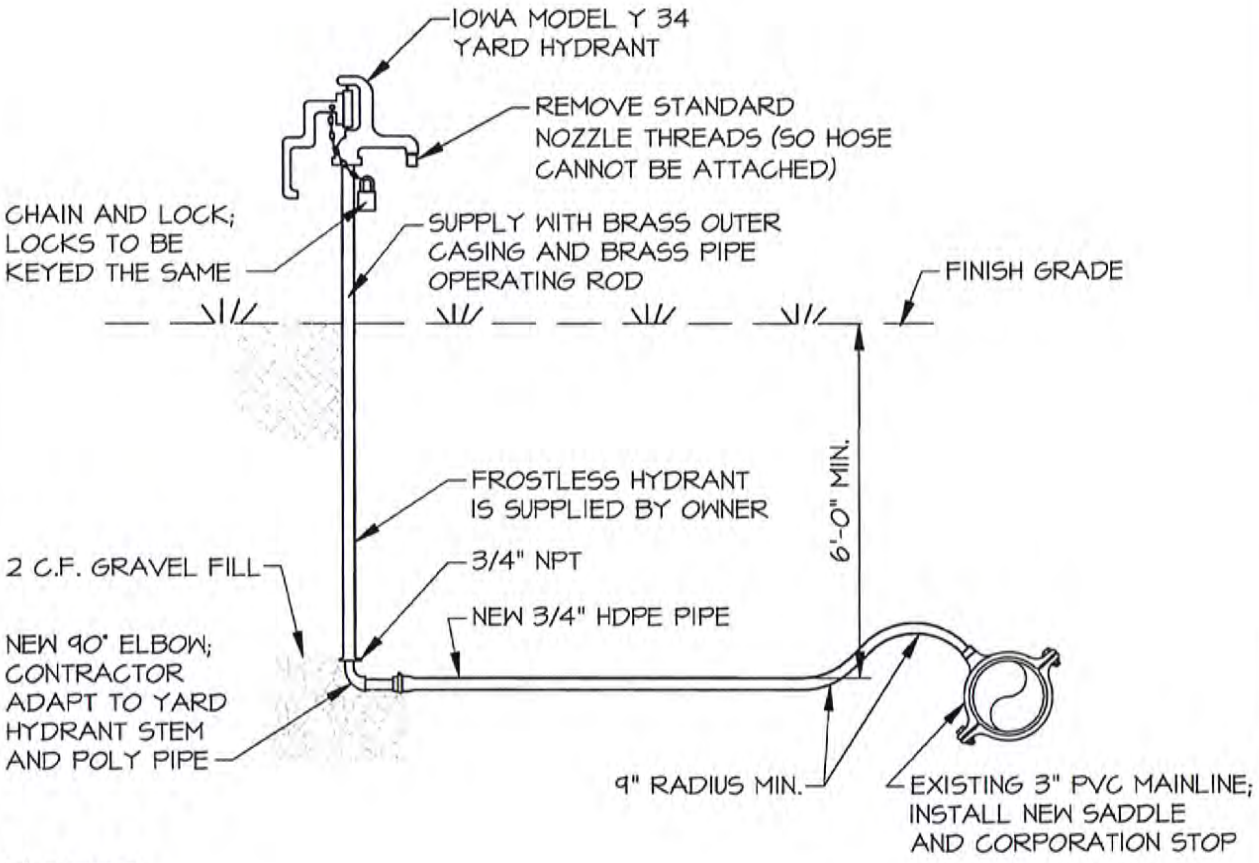

NOTES:

1. COMPRESSION FITTINGS, AS REQUIRED
2. CONTRACTOR TO SUPPLY AND INSTALL ALL THE NEW MATERIALS

1207-SAND COULEE

NCI Engineering Co.
4509 North Star Blvd.
P.O. Box 6350
Great Falls, MT 59406-6350
Phone 406-453-5478
Fax 406-453-2009

WELL SAMPLE TAP (YARD HYDRANT)

DRAWING # 12

Copyright © 2015 NCI, All Rights Reserved

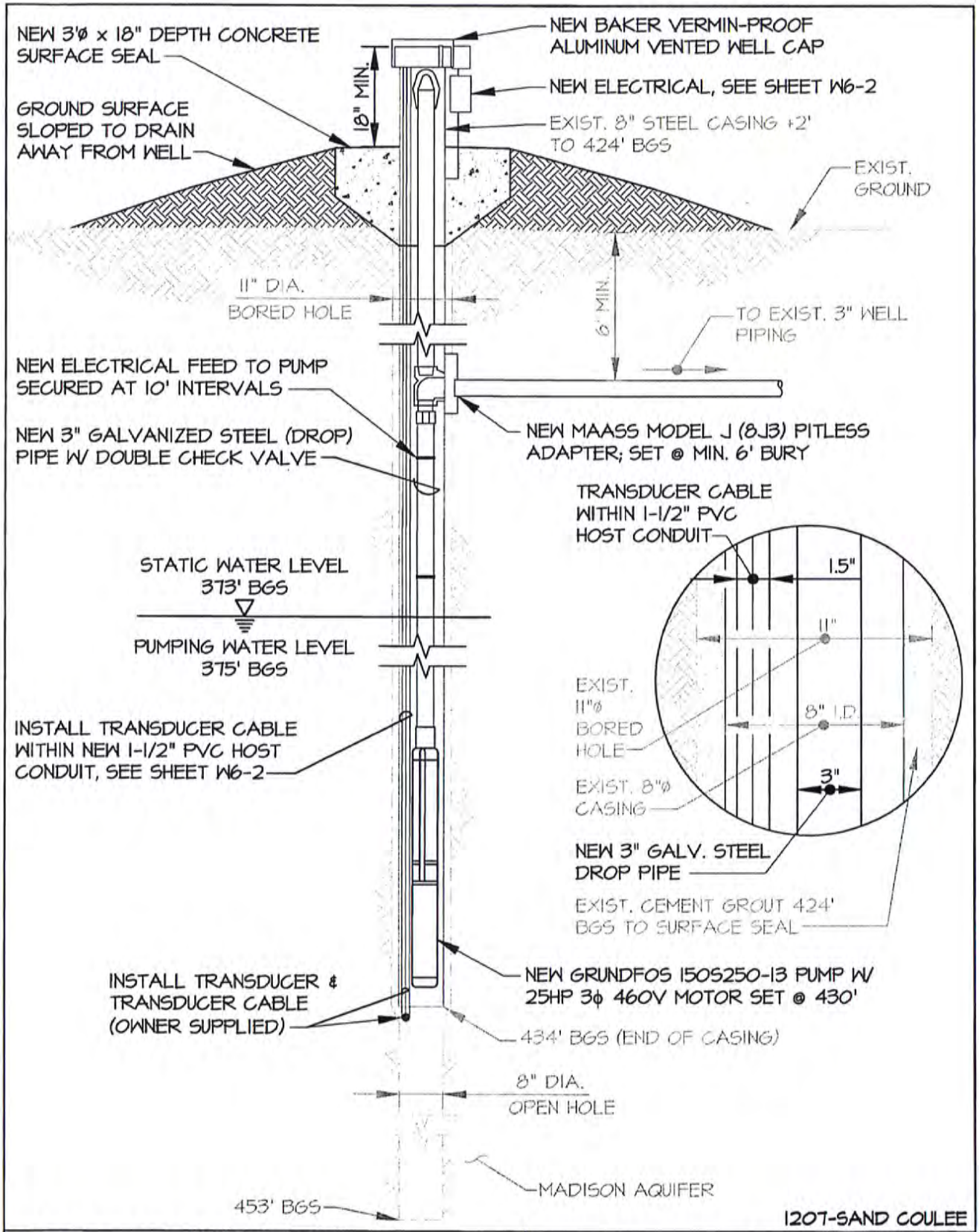

1207-SAND COULEE

NCI Engineering
NCI Engineering Co.
4509 North Star Blvd.
P.O. Box 6350
Great Falls, MT 59406-6350
Phone 406-453-5478
Fax 406-453-2009

WELL #6 PROPOSED PUMP INSTALLATION

DRAWING # W6-Pump Install

Copyright © 2015 NCI, All Rights Reserved

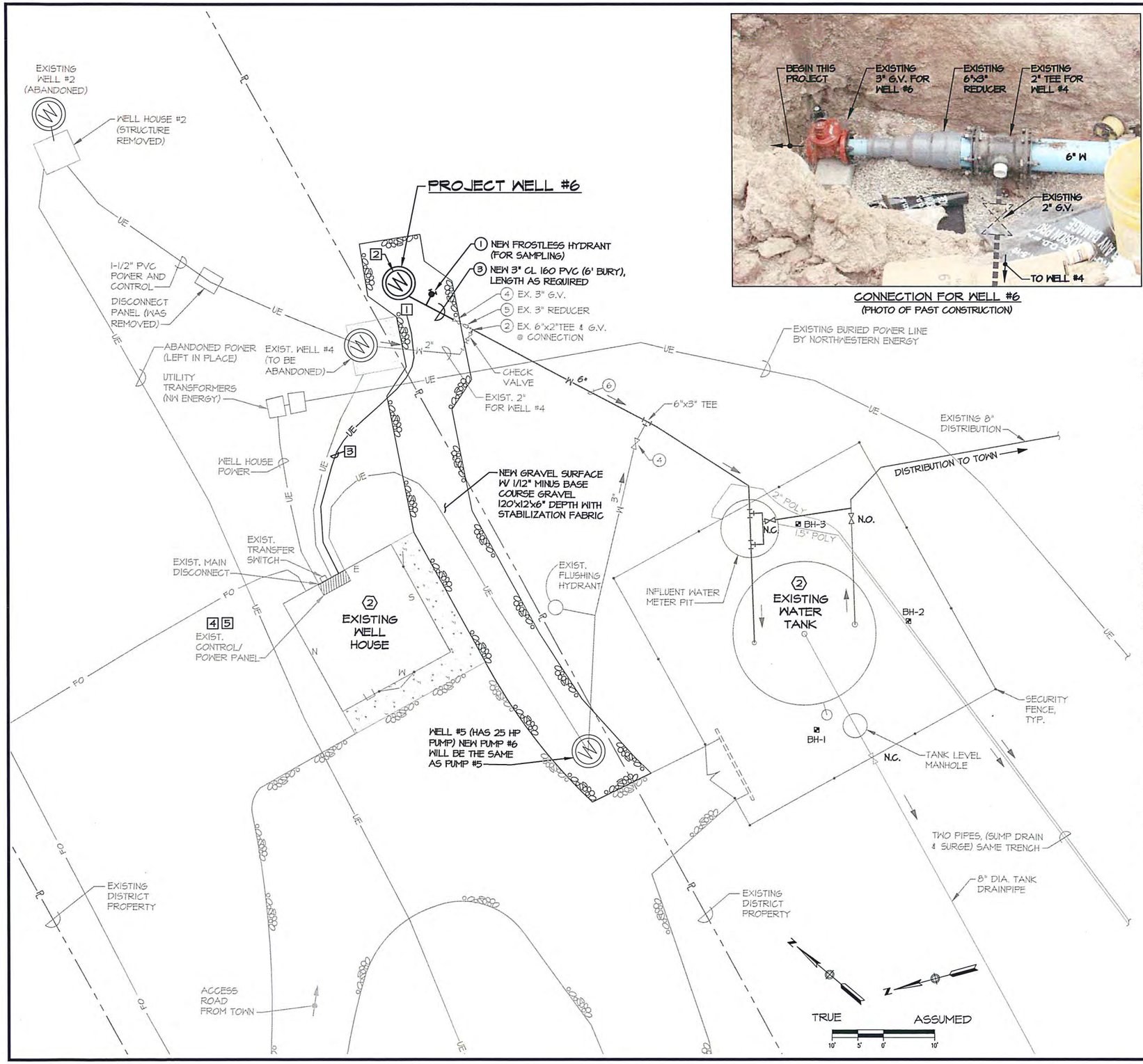

WATER TANK HILL - SITE PLAN

CONNECTION FOR WELL #6
(PHOTO OF PAST CONSTRUCTION)

TOPOGRAPHIC LEGEND

	EXISTING
VALVE	
CHECK VALVE	
NORMALLY OPEN	NO
NORMALLY CLOSED	NC
WATER	W
OVERHEAD ELECTRIC	OHE
POWER POLE	
FIBER OPTIC CABLE	FO
CONTROL POINT	CP
TEST HOLE & NUMBER	
PROPERTY LINE	
CONTOURS	3680
POINT ELEVATION	98.5

GENERAL NOTES (NEW WORK):

1. PROJECT WELL #6 HAS BEEN DRILLED AND CASING PIPE INSTALLED. ORIGINAL PROJECT INSTALLED ELECTRICAL POWER AND CONTROL TO THIS LOCATION AND WERE TEMPORARY DEAD ENDED. THE 3" PVC WELL DISCHARGE WAS STUBBED TO THIS WELL #6 LOCATION ALSO.
2. COORDINATE EXISTING WELL PUMP(S) OPERATION (AND EXISTING TANK) WITH INSTALLATION OF NEW EQUIPMENT AND KEEPING TOWN IN WATER.

MECHANICAL WORK @ PROJECT WELL #6

1. INSTALL FROSTLESS HYDRANT (SMOOTH NOSE) FOR WELL SAMPLING, SEE SPEC DWG #12; HYDRANT IS SUPPLIED BY OWNER; CONTRACTOR WILL SUPPLY SADDLE AND 3/4" HDPE PIPING
2. EXIST. 2" GV AND VALVE BOX
3. NEW 3" CL 160 PVC (6' BURY) FOR WELL #6
4. EXIST. 3" GV AND VALVE BOX FOR WELLS #5 & #6
5. EXIST. 3"x6" REDUCER
6. EXIST. 6" C-900 PVC DR-14

ELECTRICAL WORK @ PROJECT WELL #6

1. EXIST. BURIED ELECTRICAL FEED WITH LOCAL DISCONNECT SWITCH AND PANEL (DETAIL 2/P-6) TO WELL PUMP #6 FROM WELL HOUSE
2. LEVEL TRANSDUCER & TRANSDUCER CABLE FOR WELL #6 WELLS IS PROVIDED (READY TO INSTALL INSIDE CASING PIPE), SEE SHEET "W6-PUMP INSTALL"; TRANSDUCER TO MONITOR GROUND WATER ELEVATION; EXISTING TRANSDUCER CONTROL WIRES ARE FED FROM WELL HOUSE
3. EXISTING BURIED ELECTRICAL FEEDS AND CONTROL (TRANSDUCER SIGNAL) FOR WELL #6
4. CONTRACTOR WILL CONFIRM WELL #6 IS BEING OPERATED AND RECEIVING POWER FROM EXISTING CONTROL/POWER PANEL AND WELL TRANSDUCER IS PROVIDING CORRECT LEVELS
5. CONFIRM THE EXISTING CONTROL PANEL ALLOWS ALTERNATE RUN CYCLES BETWEEN WELL PUMPS #5 & #6; PUMPS WILL RUN AUTO OR MANUAL; ALARMS WILL BE SIGNALED

Revisions	By	Date

File No.	Job No.
43.109	1207 1207-W6-1
Date	**Scale**
9/20/16	AS SHOWN

Professional Seal
MONTANA
John A. Wolff
4682 E
REGISTERED PROFESSIONAL ENGINEER

Engineers
Environmental Specialists
Planners
Designers
Surveyors
NCI Engineering
4509 North Star Boulevard
P.O. Box 6350
Great Falls, MT 59406
Phone 406-453-5478
Fax 406-453-2009

Owner
SAND COULEE WATER DISTRICT

Project Title
SAND COULEE WATER IMPROVEMENTS
2014

Sheet Title
WELL #6 PUMPING
WATER TANK HILL SITE PLAN

Sheet	Of
W6-1	3

Copyright © 2016 NCI, All Rights Reserved
File # FILE #

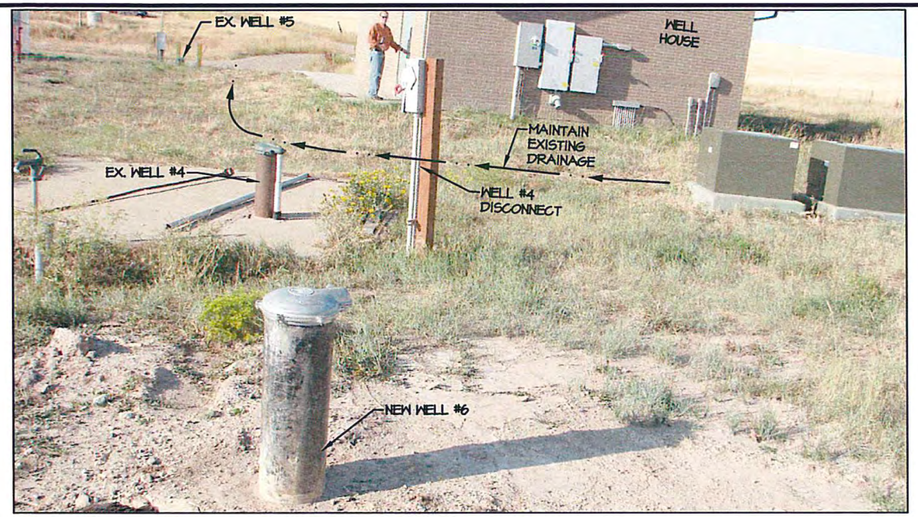

WELL SITE

INTERIOR OF EXISTING PUMP HOUSE

INTERIOR OF EXISTING PUMP HOUSE

NOTE:
EXISTING VFD (#5) IS ON LEFT SIDE OF CONTROL PANEL; INSTALL THE NEW VFD (#6) ON LEFT SIDE ALSO

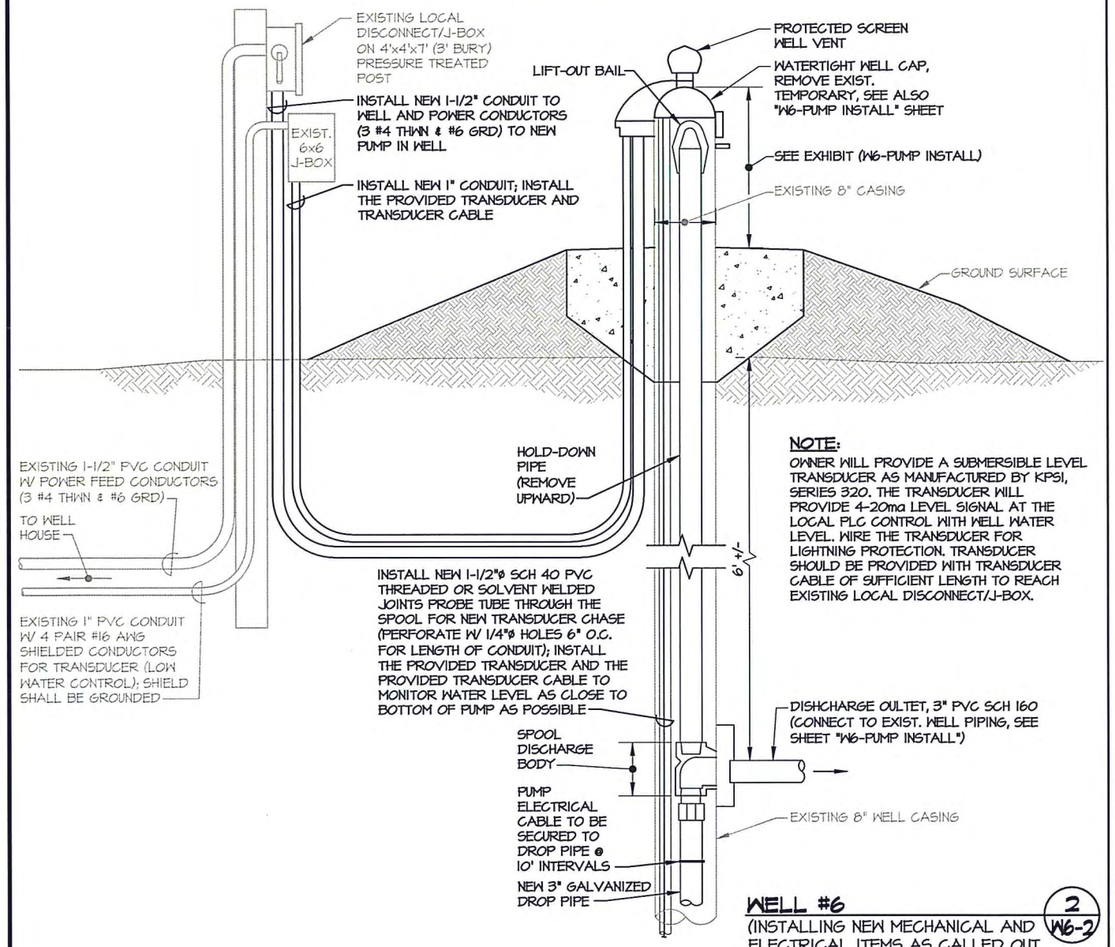

NOTE:
OWNER WILL PROVIDE A SUBMERSIBLE LEVEL TRANSDUCER AS MANUFACTURED BY KPSI, SERIES 320. THE TRANSDUCER WILL PROVIDE 4-20ma LEVEL SIGNAL AT THE LOCAL PLC CONTROL WITH WELL WATER LEVEL. WIRE THE TRANSDUCER FOR LIGHTNING PROTECTION. TRANSDUCER SHOULD BE PROVIDED WITH TRANSDUCER CABLE OF SUFFICIENT LENGTH TO REACH EXISTING LOCAL DISCONNECT/J-BOX.

WELL #6 (2 / W6-2)
(INSTALLING NEW MECHANICAL AND ELECTRICAL ITEMS AS CALLED OUT HERE AND ON "W6-PUMP INSTALL" SHEET)

NOTE:
POWER AND CONTROL CONDUCTORS TO BE PLACED IN SEPARATE CONDUITS

NOTES @ WELL HOUSE:
1. PROVIDE CONDUCTORS & CONDUIT FROM PUMP PANEL TO NEW VFD #6; CONNECT EXIST. POWER CONDUCTORS TO NEW VFD
2. CONNECT EXIST. TRANSDUCER CONDUCTORS TO CONTROL PANEL

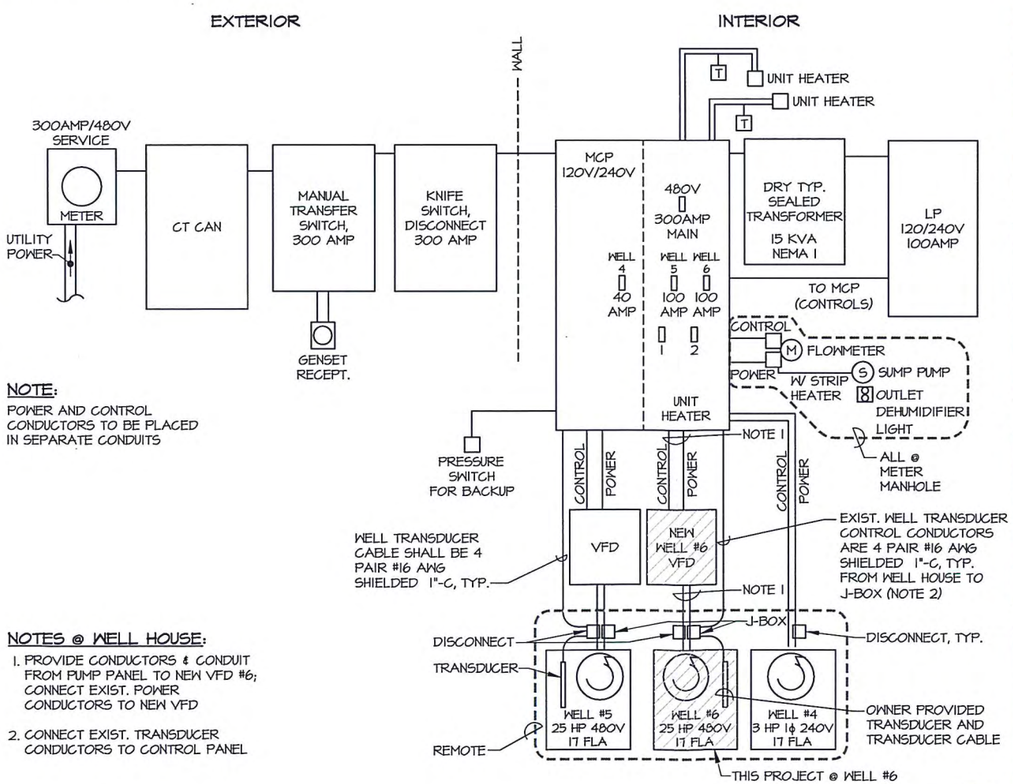

RISER DIAGRAM (1 / W6-2)
(ELECTRICAL SERVICE)

Revisions	By	Date

File No.	Job No.
43.109	1207 1207-W6-2
Date	**Scale**
9/20/16	AS SHOWN

Professional Seal
MONTANA
John A. Lee
4682 E
REGISTERED PROFESSIONAL ENGINEER

Engineers
Environmental Specialists
Planners
Designers
Surveyors
NCI Engineering
4509 North Star Boulevard
P.O. Box 6350
Great Falls, MT 59406
Phone 406-453-5478
Fax 406-453-2009

Owner
SAND COULEE WATER DISTRICT

Project Title
SAND COULEE WATER IMPROVEMENTS 2014

Sheet Title
WELL #6 PUMPING MISCELLANEOUS DETAILS

Sheet	Of
W6-2	3

Copyright © 2016 NCI, All Rights Reserved
File # FILE #

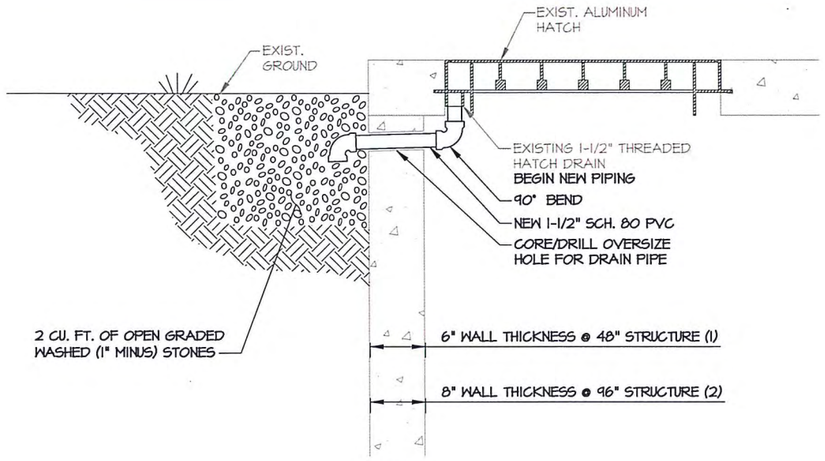

SECTION

TYP. INSTALLATION @ BELOW GROUND DISCHARGE

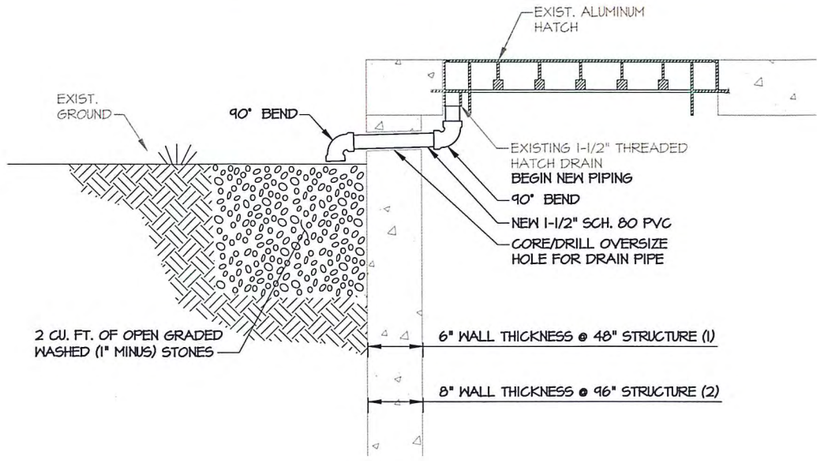

SECTION

TYP. INSTALLATION @ ABOVE GROUND DISCHARGE

HATCH DRAINS @ MANHOLE STRUCTURES

3 STRUCTURE LOCATIONS:
2 @ TANK ENCLOSURE
1 @ TOE OF TANK HILL

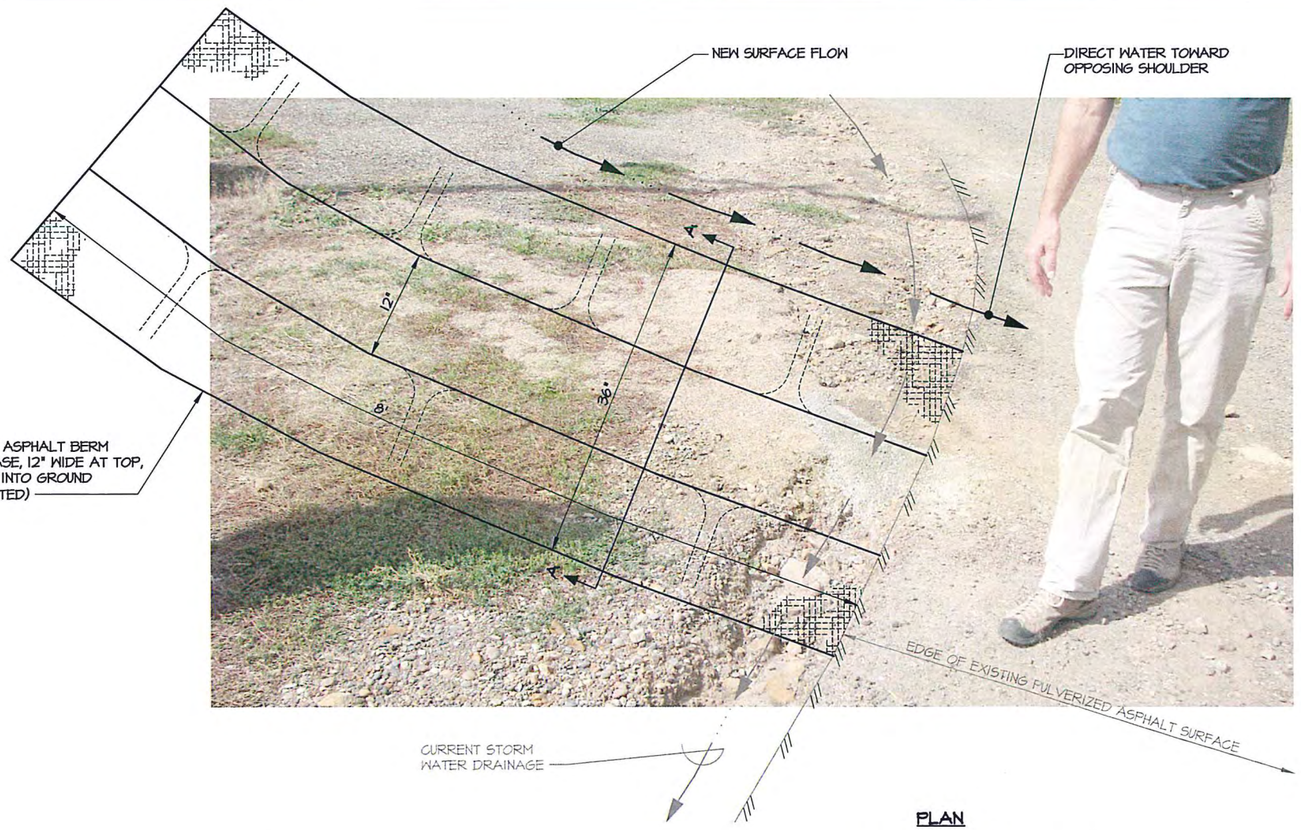

PLAN

DRAINAGE BERM

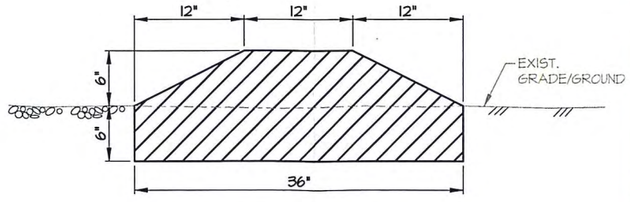

SECTION A-A

CROSS-SECTION OF NEW ASPHALT BERM

THIS LOCATION IS @ TOE OF TANK HILL

Revisions	By	Date

File No.	Job No.
43.109	1207 1207-W6-3
Date	Scale
9/20/16	AS SHOWN

Professional Seal

MONTANA
4682 E
REGISTERED PROFESSIONAL ENGINEER

Engineers
Environmental Specialists
Planners
Designers
Surveyors

NCI Engineering

4509 North Star Boulevard
P.O. Box 6350
Great Falls, MT 59406
Phone 406-453-5478
Fax 406-453-2009

Owner

SAND COULEE WATER DISTRICT

Project Title

SAND COULEE WATER IMPROVEMENTS 2014

Sheet Title

DRAINAGE BERM & HATCH DRAIN

Sheet	Of
W6-3	3

Copyright © 2016 NCI, All Rights Reserved

File # FILE #

EXHIBIT B

FEE SCHEDULE

BID SCHEDULE

BID

Item No.	Estimated Quantity	Unit	Name of Pay Item with Unit Bid Price Written In Words	Unit Price	Amount Bid
101	1	LS	Excavation and Backfill at _____	Per LS _____	$7000
102	1	LS	New Submersible Pump at _____	Per LS _____	$14703
103	1	LS	New VFD at _____	Per LS _____	$5500
104	1	LS	Miscellaneous Well Items at _____	Per LS _____	$1628
105	1	LS	Miscellaneous Mechanical at _____	Per LS _____	$1500
106	1	LS	Electrical at _____	Per LS _____	$5340
107	160	SY	Gravel Surface Restoration at _____	Per SY $20	$3200

Total Bid Amount (Items 101-107) $ 38,871.00
(Figure)

ARTICLE 4- TIME OF COMPLETION

Bidder agrees that the furnishing of Goods and Special Services will be completed within 14 days of Notice to Proceed. Contractor will be allowed to have Pump and VFD on site before NTP is provided.

ARTICLE 5 - ATTACHMENTS TO THIS BID

The following documents are attached to and made a condition of this Bid: Required Bid security as required by MCA 18-2-201 **if bid is over $50,000**

ARTICLE 6 - BID SUBMITTAL

This Bid submitted by:

Name: Pat Byrne Drilling, Inc

By: Pat J Byrne
(Signature -- attach evidence of authority to sign)

Name (typed or printed): Pat J Byrne

Title: President

Attest

PAT BYRNE DRILLING, INC.
245 Gerber Road
Great Falls, MT 59405

Business address:

Phone: 406-799-0192 Facsimile: 406-736-5428

APPENDIX B – CONSTRUCTION

APPENDIX B-1

CONSTRUCTION DAILY ACTIVITY REPORT

TO: Montana Department of Environmental Quality Remediation Division - Mine Waste Cleanup Bureau Helena, MT Attn: Tom Henderson	REPORT NUMBER **#1**
PROJECT: Sand Coulee, water system replacement	DATE **8-18-2014**
CONTRACTOR: Boland Construction Great Falls, MT	DEQ CONTRACT NUMBER
	WEATHER **Sunny**

HAS ANYTHING DEVELOPED ON THE WORK WHICH MIGHT LEAD TO A CHANGE ORDER OR FINDING OF FACT?

Water line layout at toe of water tank hill. Existing water is not where shown. Need to locate existing.

☐ NO ☑ YES

HEALTH AND SAFETY

Was a Job Safety Meeting held this date?

At Fire Hall

☐ NO ☑ YES

TEMPERATURE	
MINIMUM	MAXIMUM
70	**85**

NUMBER OF CONTRACTOR'S EMPLOYEES

SUPERVISORY	OPERATORS	LABORERS	TOTAL
Steve C./Barry	**4**	**5**	**9**

24 HOUR PRECIPITATION

- 0 -

SUBCONTRACTORS ON SITE

COMPANY NAME	TOTAL EMPLOYEES
1.	
2.	

List the major items of equipment

	units	EQUIPMENT DESCRIPTION	Hours	Comments	
1.	**4**	**Bigger Backhoes**	**0**		
2.	**1**	**Smaller Dozer**	**4**		
3.	**2**	**Vac. Trucks**	**6**		
4.	**1**	**Front End Loader**	**4**		
5.					
6.					
7.					
8.					
9.					
10.					
11.					
12.					
13.					
14.					
15.					
16.					

Notes:

CONSTRUCTION DAILY ACTIVITY REPORT

WORK PERFORMED TODAY			
	LOCATION	BID ITEM NUMBER	DESCRIPTION OF WORK PERFORMED
1.			**"Layout of Sewer"/Organizing**
2.			
3.			
4.			
5.			
6.			
7.			
8.			
9.			
10.			

REASON FOR NO WORK:

INFORMATION ON PROGRESS OF WORK – (Causes for delays, extent of delays, Plant, materials, etc.)

MATERIALS DELIVERED TO SITE	
	DESCRIPTION
1.	**Pipe and Hydrants were all ready on site.**
2.	**Pipe Bedding**
3.	

NOTE –

INSPECTIONS AND TEST (Include comment pertaining to contractors activities)

	TESTS	RESULTS		COMMENT
1.				
2.				

SAMPLES COLLECTED

	SAMPLE TYPE	SAMPLE ID	COMMENTS
1.			
2.			
3.			

CONSTRUCTION DAILY ACTIVITY REPORT

VERBAL INSTRUCTIONS GIVEN TO CONTRACTOR

	NAMES	INSTRUCTION	REACTION	REMARKS
1.	**Steve**	**Okay, to bring (2') FH into Gulch Road.**		
2.	**Steve**	**Alignment at Mieyrs below tank.**		
		Hill – Need to Explore.		
		Existing Water Main Location.		

NOTES – **1) Fire danger high – be careful. 2) NCI can use Boland's Job Shack. 3) Boland has to get proctors. 4) NCI can plan on densometer testing by Wednesday. 5) #71 House at Gulch Lane – put meter pit to East and bring new service back to West to tie.**

DESIGN MODIFICATIONS

	DESCRIPTION OF MODIFICATION	REASON	ENGINEER APPROVAL?
1.			
2.			

VISITORS

	TIME	NAME	REPRESENTING	REMARKS
1.				
2.				
3.				
4.				
5.				
6.				
7.				

NOTES –

REMARKS – (Include controversial matters, information, instructions, disagreements, or any other miscellaneous remarks):

OVERSIGHT SIGNATURE	DATE	PROJECT MANAGER INITIALS	DATE

CONSTRUCTION DAILY ACTIVITY REPORT

TO: Montana Department of Environmental Quality Remediation Division - Mine Waste Cleanup Bureau Helena, MT Attn: Tom Henderson	REPORT NUMBER **#2**
PROJECT: Sand Coulee, water system replacement	DATE **8-19-2014**
CONTRACTOR: Boland Construction Great Falls, MT	DEQ CONTRACT NUMBER
HAS ANYTHING DEVELOPED ON THE WORK WHICH MIGHT LEAD TO A CHANGE ORDER OR FINDING OF FACT? **Existing pipe location not as shown on plan sht D-2 and D-3; need to do more exploratory to find exist water main location to figure out new alignment.** ☑	WEATHER **Sunny** **Dry**
HEALTH AND SAFETY Was a Job Safety Meeting held this date? ☐ NO ☐ YES	TEMPERATURE MINIMUM **65** / MAXIMUM **85**

NUMBER OF CONTRACTOR'S EMPLOYEES				24 HOUR PRECIPITATION
SUPERVISORY	OPERATORS	LABORERS	TOTAL	
2 - Steve C./Barry	**2**	**5**	**9**	

SUBCONTRACTORS ON SITE

COMPANY NAME	TOTAL EMPLOYEES
1. **NCI Surveyor**	**1**
2. **Dickman Haul 1 ½ B.C. Co. and Pitrun To Tank.**	**1 Truck Driver**

List the major items of equipment

	units	EQUIPMENT DESCRIPTION	Hours	Comments	
1.	**3**	**Bigger Backhoes – Front End Loaders**	**0**	**Not digging early on. One backhoe started later in day.**	
2.		**Fork Lift – Cat Dozer – Dump Truck**			
3.	**2**	**Vacuum Trucks (looking for existing water exploratory and also existing utilities at trenches).**			
4.	**1**	**Backhoe at top of hill preparing for culvert extension.**			
5.					
6.					
7.					
8.					
9.					

Notes:

CONSTRUCTION DAILY ACTIVITY REPORT

WORK PERFORMED TODAY			
	LOCATION	BID ITEM NUMBER	DESCRIPTION OF WORK PERFORMED
1.			**Exploratory – 6 hours this date.**
2.			**note on 8-18 vac 2-man crew dug 3 holes, time?**
3.			
4.			
5.			
6.			
7.			
8.			
9.			
10.			

REASON FOR NO WORK:

INFORMATION ON PROGRESS OF WORK – (Causes for delays, extent of delays, Plant, materials, etc.)

MATERIALS DELIVERED TO SITE	
	DESCRIPTION
1.	
2.	
3.	

NOTE –

INSPECTIONS AND TEST (Include comment pertaining to contractors activities)

	TESTS	RESULTS		COMMENT
1.				
2.				

SAMPLES COLLECTED

	SAMPLE TYPE	SAMPLE ID	COMMENTS
1.			
2.			
3.			

CONSTRUCTION DAILY ACTIVITY REPORT

VERBAL INSTRUCTIONS GIVEN TO CONTRACTOR

	NAMES	INSTRUCTION	REACTION	REMARKS
1.	**Steve**	**Need to track exploratory hours.**		
2.	**Steve**	**He needs to be doing daily reports for us**		

NOTES – **We talked to Gordon Lucionoi (House #70 at Dahn's Lane) he wants to relocate his w/s to his own property, and possibly do a future water service. I said to talk to Kent.**

DESIGN MODIFICATIONS

	DESCRIPTION OF MODIFICATION	REASON	ENGINEER APPROVAL?
1.			
2.			

VISITORS

	TIME	NAME	REPRESENTING	REMARKS
1.				
2.				
3.				
4.				
5.				
6.				
7.				

NOTES –

REMARKS – (Include controversial matters, information, instructions, disagreements, or any other miscellaneous remarks):

OVERSIGHT SIGNATURE	DATE	PROJECT MANAGER INITIALS	DATE

CONSTRUCTION DAILY ACTIVITY REPORT

TO: Montana Department of Environmental Quality Remediation Division - Mine Waste Cleanup Bureau Helena, MT Attn: Tom Henderson	REPORT NUMBER **#3**
PROJECT: Sand Coulee, water system replacement	DATE **8-20-2014**
CONTRACTOR: Boland Construction Great Falls, MT	DEQ CONTRACT NUMBER
HAS ANYTHING DEVELOPED ON THE WORK WHICH MIGHT LEAD TO A CHANGE ORDER OR FINDING OF FACT? ☐ NO ☐ YES	WEATHER **Dry – A.M.**
HEALTH AND SAFETY Was a Job Safety Meeting held this date? ☐ NO ☐ YES	TEMPERATURE MINIMUM **60** MAXIMUM **80**

NUMBER OF CONTRACTOR'S EMPLOYEES

SUPERVISORY	OPERATORS	LABORERS	TOTAL
Barry (top of hill)	**1**	**2**	**17**
Steve (distribution)	**4**	**8**	**(No.'s are Est.)**

24 HOUR PRECIPITATION

SUBCONTRACTORS ON SITE

COMPANY NAME	TOTAL EMPLOYEES
1. **NCI Surveyor doing Layout**	**1**
2. **Dickman Hauling Pit Run to Top of Hill**	**1 Truck Driver**

List the major items of equipment

	units	EQUIPMENT DESCRIPTION	Hours	Comments	
1.		**Backhoe**	**6**	**At Upper (Sheet D.8)**	
2.		**Backhoe and Compaction Backhoe**	**8**	**At Gulch Lane**	
3.		**Backhoe at Top of Hill Working on Well House Foundation & Culverts**			
4.					
5.					
6.					
7.					
8.					

Notes: **Added service House #56 to South at Upper Line.**
Installed dirt trench plug in Gulch Lane (Approx. Sta. 11+50) using fines from excavation at Upper Line to try to stop groundwater flow in trench. Will install concrete plug tomorrow.

CONSTRUCTION DAILY ACTIVITY REPORT

WORK PERFORMED TODAY

	LOCATION	BID ITEM NUMBER	DESCRIPTION OF WORK PERFORMED
1.	**Upper Line**	**Watermain**	**3-4 lengths plus service corp.**
2.	**Gulch Lane**	**Watermain**	**Continuing to East.**
3.			
4.			
5.			
6.			
7.			

REASON FOR NO WORK:

INFORMATION ON PROGRESS OF WORK – (Causes for delays, extent of delays, Plant, materials, etc.)

MATERIALS DELIVERED TO SITE

	DESCRIPTION
1.	**PVC 0900 Water Main Pipe**
2.	**Pit Run Gravel**
3.	

NOTE –

INSPECTIONS AND TEST (Include comment pertaining to contractors activities)

	TESTS	RESULTS		COMMENT
1.	**Density Tests (NCI)**	**Inconclusive**		**Need Soil Proctors from Boland**
2.				

SAMPLES COLLECTED

	SAMPLE TYPE	SAMPLE ID	COMMENTS
1.			
2.			
3.			

CONSTRUCTION DAILY ACTIVITY REPORT

VERBAL INSTRUCTIONS GIVEN TO CONTRACTOR

	NAMES	INSTRUCTION	REACTION	REMARKS
1.	**Barry & Steve**	**Do not need to segregate coal seam in backfill. Also we want to place some more concrete trench blocks bid item in trenches with ground water.**		
2.	**Steve**	**We missed Corp stop to offset service (pit) at #71 Gulch Lane. Will install another corp further East. All pit to be installed out of travel way.**		
3.	**Steve**	**Add a concrete trench block along Gulch Lane.**		
4.	**Steve**	**Add bedding gravel at full pipe envelope (Gulch Lane).**		

NOTES –

DESIGN MODIFICATIONS

	DESCRIPTION OF MODIFICATION	REASON	ENGINEER APPROVAL?
1.			
2.			

VISITORS

	TIME	NAME	REPRESENTING	REMARKS
1.				
2.				
3.				
4.				
5.				

NOTES –

REMARKS – (Include controversial matters, information, instructions, disagreements, or any other miscellaneous remarks):

OVERSIGHT SIGNATURE	DATE	PROJECT MANAGER INITIALS	DATE

CONSTRUCTION DAILY ACTIVITY REPORT

TO: Montana Department of Environmental Quality Remediation Division - Mine Waste Cleanup Bureau Helena, MT Attn: Tom Henderson	REPORT NUMBER **#4**
PROJECT: Sand Coulee, water system replacement	DATE **8-21-2014**
CONTRACTOR: Boland Construction Great Falls, MT	DEQ CONTRACT NUMBER
HAS ANYTHING DEVELOPED ON THE WORK WHICH MIGHT LEAD TO A CHANGE ORDER OR FINDING OF FACT? ☐ NO ☐ YES	WEATHER **Cloudy**
HEALTH AND SAFETY Was a Job Safety Meeting held this date? ☐ NO ☐ YES	TEMPERATURE MINIMUM **60** MAXIMUM **80**

NUMBER OF CONTRACTOR'S EMPLOYEES

SUPERVISORY	OPERATORS	LABORERS	TOTAL
Steve C.	**4-5**	**6-7**	**17**

24 HOUR PRECIPITATION

SUBCONTRACTORS ON SITE

COMPANY NAME	TOTAL EMPLOYEES
1. **Dickman hauling pit run to top of hill.** 2.	**1**

List the major items of equipment

	units	EQUIPMENT DESCRIPTION	Hours	Comments	
1.	**2**	**Digging Backhoes**			
2.	**2**	**Compacting Backhoes**			
3.	**2**	**Frontend Loaders at Trenches**			
4.	**1**	**Frontend Loader Top of Hill also**			
5.		**Compaction Equipment**			
6.					
7.					
8.					

Notes:

CONSTRUCTION DAILY ACTIVITY REPORT

WORK PERFORMED TODAY

	LOCATION	BID ITEM NUMBER	DESCRIPTION OF WORK PERFORMED
1.	**Gulch Lane**	**Pipe**	
2.	**Pipe Bedding**		**Full Envelope**
3.	**Upper Line**	**Pipe**	
4.	**At Top of Hill Road**		**Installing pit run material.**
5.	**At Top of Hill**	**Building**	**Excavation for Footing.**
6.			
7.			

REASON FOR NO WORK:

INFORMATION ON PROGRESS OF WORK – (Causes for delays, extent of delays, Plant, materials, etc.)

MATERIALS DELIVERED TO SITE

	DESCRIPTION
1.	**Pit Run to Top of Hill**
2.	
3.	

NOTE –

INSPECTIONS AND TEST (Include comment pertaining to contractors activities)

	TESTS	RESULTS		COMMENT
1.				
2.				

SAMPLES COLLECTED

	SAMPLE TYPE	SAMPLE ID	COMMENTS
1.			
2.			
3.			

CONSTRUCTION DAILY ACTIVITY REPORT

VERBAL INSTRUCTIONS GIVEN TO CONTRACTOR

	NAMES	INSTRUCTION	REACTION	REMARKS
1.	**Steve**	**12" PVC culvert upper end of pipe will need to be lowered in elevation.**		
2.				
3.				
4.				

NOTES –

DESIGN MODIFICATIONS

	DESCRIPTION OF MODIFICATION	REASON	ENGINEER APPROVAL?
1.			
2.			

VISITORS

	TIME	NAME	REPRESENTING	REMARKS
1.				
2.				
3.				
4.				
5.				

NOTES –

REMARKS – (Include controversial matters, information, instructions, disagreements, or any other miscellaneous remarks):

1. Getting set to pour slurry pipe trench at Gulch Lane.

OVERSIGHT SIGNATURE	DATE	PROJECT MANAGER INITIALS	DATE

CONSTRUCTION DAILY ACTIVITY REPORT

TO: Montana Department of Environmental Quality Remediation Division - Mine Waste Cleanup Bureau Helena, MT Attn: Tom Henderson	REPORT NUMBER **#5**
PROJECT: Sand Coulee, water system replacement	DATE **8-22-2014**
CONTRACTOR: Boland Construction Great Falls, MT	DEQ CONTRACT NUMBER
HAS ANYTHING DEVELOPED ON THE WORK WHICH MIGHT LEAD TO A CHANGE ORDER OR FINDING OF FACT? ☐ NO ☐ YES	WEATHER **Raining**
HEALTH AND SAFETY Was a Job Safety Meeting held this date? ☐ NO ☐ YES	TEMPERATURE MINIMUM **55** / MAXIMUM

NUMBER OF CONTRACTOR'S EMPLOYEES			
SUPERVISORY	OPERATORS	LABORERS	TOTAL
Steve C.	**4-5**	**6-7**	

24 HOUR PRECIPITATION

SUBCONTRACTORS ON SITE

COMPANY NAME	TOTAL EMPLOYEES
1. **Dickman did one load, but will stop hauling due to Tank Hill Road.**	**1**

List the major items of equipment

	units	EQUIPMENT DESCRIPTION	Hours	Comments	
1.	**2**	**Digging Backhoes**			
2.	**2**	**Compacting Backhoes**			
3.	**2**	**Frontend Loaders at Trenches**			
4.	**1**	**Frontend Loader Top of Hill also**			
5.		**Compaction Equipment**			
6.					
7.					
8.					

Notes: Upper Pipe Crew stopped at 11a.m. due to Rain. Top of Hill Crew did the same. Gulch Pipe Crew Shut Down before Noon.

CONSTRUCTION DAILY ACTIVITY REPORT

WORK PERFORMED TODAY

	LOCATION	BID ITEM NUMBER	DESCRIPTION OF WORK PERFORMED
1.			
2.			
3.			
4.			
5.			
6.			
7.			

REASON FOR NO WORK:

INFORMATION ON PROGRESS OF WORK – (Causes for delays, extent of delays, Plant, materials, etc.)

MATERIALS DELIVERED TO SITE

	DESCRIPTION
1.	
2.	
3.	

NOTE –

INSPECTIONS AND TEST (Include comment pertaining to contractors activities)

	TESTS	RESULTS		COMMENT
1.				
2.				

SAMPLES COLLECTED

	SAMPLE TYPE	SAMPLE ID	COMMENTS
1.			
2.			
3.			

CONSTRUCTION DAILY ACTIVITY REPORT

VERBAL INSTRUCTIONS GIVEN TO CONTRACTOR

	NAMES	INSTRUCTION	REACTION	REMARKS
1.	**Greg at Gulch**	**Relocate House Service at #77 & #81**		**Kent showed Greg**
2.				
3.				
4.				

NOTES –

DESIGN MODIFICATIONS

	DESCRIPTION OF MODIFICATION	REASON	ENGINEER APPROVAL?
1.			
2.			

VISITORS

	TIME	NAME	REPRESENTING	REMARKS
1.				
2.				
3.				
4.				
5.				

NOTES –

REMARKS – (Include controversial matters, information, instructions, disagreements, or any other miscellaneous remarks):

OVERSIGHT SIGNATURE	DATE	PROJECT MANAGER INITIALS	DATE

CONSTRUCTION DAILY ACTIVITY REPORT

TO: Montana Department of Environmental Quality Remediation Division - Mine Waste Cleanup Bureau Helena, MT Attn: Tom Henderson	REPORT NUMBER **#6**
PROJECT: Sand Coulee, water system replacement	DATE **8-25-2014**
CONTRACTOR: Boland Construction Great Falls, MT	DEQ CONTRACT NUMBER
HAS ANYTHING DEVELOPED ON THE WORK WHICH MIGHT LEAD TO A CHANGE ORDER OR FINDING OF FACT? ☐ NO ☐ YES	WEATHER **Drying out**
HEALTH AND SAFETY Was a Job Safety Meeting held this date? ☐ NO ☐ YES	TEMPERATURE MINIMUM **55** MAXIMUM **70**

NUMBER OF CONTRACTOR'S EMPLOYEES

SUPERVISORY	OPERATORS	LABORERS	TOTAL
Steve C.	**4-5**	**6-7**	
Top of hill	**2**		

24 HOUR PRECIPITATION: **Had 3-4" over weekend**

SUBCONTRACTORS ON SITE

COMPANY NAME	TOTAL EMPLOYEES
1. **Dickman hauling 1.5" base course.**	**1**

List the major items of equipment

	units	EQUIPMENT DESCRIPTION	Hours	Comments	
1.	**2**	**Digging Backhoes**			
2.	**2**	**Compacting Backhoes**			
3.	**2**	**Frontend Loaders at Trenches**			
4.	**1**	**Frontend Loader Top of Hill also**			
5.		**Compaction Equipment**			
6.	**1**	**Backhoe at top of hill**			
7.					
8.					

Notes:

CONSTRUCTION DAILY ACTIVITY REPORT

WORK PERFORMED TODAY

	LOCATION	BID ITEM NUMBER	DESCRIPTION OF WORK PERFORMED
1.	**Gulch lane**		**Laid pipe up to East Hunter (15+80) will jump across on Tuesday,**
2.			**Installed type 2 stab 15+30 to 15+80 12" depth (6.5 CY)**
3.	**Upper line**		**Laid to 3+90, cut and repaired existing 2" water at 3+80 cut and repaired**
4.			**2" steel drain line at 4+00**
5.	**Top of hill**		**Dug footings for well house, installed base gravel for footings**
6.			
7.			**Also doing exploratory for utilities**

REASON FOR NO WORK:

INFORMATION ON PROGRESS OF WORK – (Causes for delays, extent of delays, Plant, materials, etc.)

MATERIALS DELIVERED TO SITE

	DESCRIPTION
1.	**Dickman base course material on tank hill**
2.	
3.	

NOTE –

INSPECTIONS AND TEST (Include comment pertaining to contractors activities)

	TESTS	RESULTS		COMMENT
1.	Density tests			
2.				

SAMPLES COLLECTED

	SAMPLE TYPE	SAMPLE ID	COMMENTS
1.			
2.			
3.			

CONSTRUCTION DAILY ACTIVITY REPORT

VERBAL INSTRUCTIONS GIVEN TO CONTRACTOR

	NAMES	INSTRUCTION	REACTION	REMARKS
1.				
2.				
3.				
4.				

NOTES –

DESIGN MODIFICATIONS

	DESCRIPTION OF MODIFICATION	REASON	ENGINEER APPROVAL?
1.	**FH at upper line moved to east (3+66) due to**		
2.	**Trees, fiber, and meter pit same area**		

VISITORS

	TIME	NAME	REPRESENTING	REMARKS
1.				
2.				
3.				
4.				
5.				

NOTES –

REMARKS – (Include controversial matters, information, instructions, disagreements, or any other miscellaneous remarks):

OVERSIGHT SIGNATURE	DATE	PROJECT MANAGER INITIALS	DATE

CONSTRUCTION DAILY ACTIVITY REPORT

TO: Montana Department of Environmental Quality Remediation Division - Mine Waste Cleanup Bureau Helena, MT Attn: Tom Henderson	REPORT NUMBER **#7**
PROJECT: Sand Coulee, water system replacement	DATE **8-26-2014**
CONTRACTOR: Boland Construction Great Falls, MT	DEQ CONTRACT NUMBER
HAS ANYTHING DEVELOPED ON THE WORK WHICH MIGHT LEAD TO A CHANGE ORDER OR FINDING OF FACT? ☐ NO ☐ YES	WEATHER **Sunny**
HEALTH AND SAFETY Was a Job Safety Meeting held this date? ☐ NO ☐ YES	TEMPERATURE MINIMUM **55** MAXIMUM **80**

NUMBER OF CONTRACTOR'S EMPLOYEES				24 HOUR PRECIPITATION
SUPERVISORY	OPERATORS	LABORERS	TOTAL	**None**
Steve C.	**5**	**6**		
Top of hill	**2**			

SUBCONTRACTORS ON SITE

COMPANY NAME	TOTAL EMPLOYEES
1. **Dickman hauling 1.5" base course.**	**1**

List the major items of equipment

	units	EQUIPMENT DESCRIPTION	Hours	Comments	
1.	**2**	**Digging Backhoes**			
2.	**2**	**Compacting Backhoes**			
3.	**2**	**Frontend Loaders at Trenches**			
4.	**1**	**Frontend Loader Top of Hill also**			
5.		**Compaction Equipment**			
6.	**1**	**Backhoe at top of hill**			
7.					
8.					

Notes:

CONSTRUCTION DAILY ACTIVITY REPORT

WORK PERFORMED TODAY

	LOCATION	BID ITEM NUMBER	DESCRIPTION OF WORK PERFORMED
1.	**Fire hall line**		**Started on south side East Hunter and installing south**
2.			**Using imported type 1, ran into coal and rocks**
3.	**Upper line**		**Continuing east, started using type 1 bedding 4+35**
4.			
5.	**Top of hill**		**Dug footings for well house, installed base gravel for footings**
6.			
7.			**Also doing exploratory for utilities**

REASON FOR NO WORK:

INFORMATION ON PROGRESS OF WORK – (Causes for delays, extent of delays, Plant, materials, etc.)

MATERIALS DELIVERED TO SITE

	DESCRIPTION
1.	**Dickman base course material on tank hill**
2.	
3.	

NOTE –

INSPECTIONS AND TEST (Include comment pertaining to contractors activities)

	TESTS	RESULTS		COMMENT
1.	Density tests			
2.				

SAMPLES COLLECTED

	SAMPLE TYPE	SAMPLE ID	COMMENTS
1.			
2.			
3.			

CONSTRUCTION DAILY ACTIVITY REPORT

VERBAL INSTRUCTIONS GIVEN TO CONTRACTOR

	NAMES	INSTRUCTION	REACTION	REMARKS
1.				
2.				
3.				
4.				

NOTES –

DESIGN MODIFICATIONS

	DESCRIPTION OF MODIFICATION	REASON	ENGINEER APPROVAL?
1.	**Moved meter pit for #67 upper line**		
2.	**To get away from propane tank in yard**		

VISITORS

	TIME	NAME	REPRESENTING	REMARKS
1.				
2.				
3.				
4.				
5.				

NOTES –

REMARKS – (Include controversial matters, information, instructions, disagreements, or any other miscellaneous remarks):

OVERSIGHT SIGNATURE	DATE	PROJECT MANAGER INITIALS	DATE

CONSTRUCTION DAILY ACTIVITY REPORT

TO: Montana Department of Environmental Quality Remediation Division - Mine Waste Cleanup Bureau Helena, MT Attn: Tom Henderson	REPORT NUMBER **#8**
PROJECT: Sand Coulee, water system replacement	DATE **8-27-2014**
CONTRACTOR: Boland Construction Great Falls, MT	DEQ CONTRACT NUMBER
HAS ANYTHING DEVELOPED ON THE WORK WHICH MIGHT LEAD TO A CHANGE ORDER OR FINDING OF FACT? ☐ NO ☐ YES	WEATHER **Sunny**
HEALTH AND SAFETY Was a Job Safety Meeting held this date? ☐ NO ☐ YES	TEMPERATURE MINIMUM **60** MAXIMUM **80**

NUMBER OF CONTRACTOR'S EMPLOYEES

SUPERVISORY	OPERATORS	LABORERS	TOTAL
Steve C.	**5**	**6**	
Top of hill	**2**		

24 HOUR PRECIPITATION: **None**

SUBCONTRACTORS ON SITE

COMPANY NAME	TOTAL EMPLOYEES
1. **Detailed Concrete...well house concret...footings**	**3**

List the major items of equipment

	units	EQUIPMENT DESCRIPTION	Hours	Comments	
1.	**2**	**Digging Backhoes**			
2.	**2**	**Compacting Backhoes**			
3.	**2**	**Frontend Loaders at Trenches**			
4.	**1**	**Frontend Loader Top of Hill also**			
5.		**Compaction Equipment**			
6.	**1**	**Backhoe at top of hill**			
7.					
8.					

Notes:

CONSTRUCTION DAILY ACTIVITY REPORT

WORK PERFORMED TODAY

	LOCATION	BID ITEM NUMBER	DESCRIPTION OF WORK PERFORMED
1.	**Fire hall line**	**8" water**	**Started 18+30 ended at 18+62**
2.			**Using imported type 1, line has coal and rocks**
3.	**Upper line**		**started 4+60 ended 5+50 using imported type 1 bedding**
4.			
5.	**Top of hill**		**Formed & rebar for well house footings, and poured.**
6.			
7.			**Also doing exploratory for utilities**

REASON FOR NO WORK:

INFORMATION ON PROGRESS OF WORK – (Causes for delays, extent of delays, Plant, materials, etc.)

MATERIALS DELIVERED TO SITE

	DESCRIPTION
1.	**Rebar, forms and concrete on tank hill**
2.	**Fusible PVC pipe (44' lengths)**
3.	

NOTE –

INSPECTIONS AND TEST (Include comment pertaining to contractors activities)

	TESTS	RESULTS		COMMENT
1.	Density tests			
2.				

SAMPLES COLLECTED

	SAMPLE TYPE	SAMPLE ID	COMMENTS
1.			
2.			
3.			

CONSTRUCTION DAILY ACTIVITY REPORT

VERBAL INSTRUCTIONS GIVEN TO CONTRACTOR

	NAMES	INSTRUCTION	REACTION	REMARKS
1.				
2.				
3.				
4.				

NOTES –

DESIGN MODIFICATIONS

	DESCRIPTION OF MODIFICATION	REASON	ENGINEER APPROVAL?
1.			
2.			

VISITORS

	TIME	NAME	REPRESENTING	REMARKS
1.				
2.				
3.				
4.				
5.				

NOTES –w/Steve, we visited about pit run quantities for road on tank hill, I said I refigured our quanties with 6" stripping filled in but that still did not account for overrun. I said the raod was a little wider and we could regrade to get some material back. Steve said he understood overrun and that he would work out a compromise on quantities.

REMARKS – (Include controversial matters, information, instructions, disagreements, or any other miscellaneous remarks):

I still need shop dwg for builing rebar and for tank rebar. We needed concrete testing for walls and slab, could let footing tests go. Do not add water to mix once on top of hill. Discussed the NCI/District finding curb stops at existing services, we could not do this, it was Boland's obligations to try and find first and then possibly ask Kent for help after that. NCI and District could tweak the meter pit locations (out of traveled way)

OVERSIGHT SIGNATURE	DATE	PROJECT MANAGER INITIALS	DATE

CONSTRUCTION DAILY ACTIVITY REPORT

TO: Montana Department of Environmental Quality Remediation Division - Mine Waste Cleanup Bureau Helena, MT Attn: Tom Henderson	REPORT NUMBER **#9**
PROJECT: Sand Coulee, water system replacement	DATE **8-28-2014**
CONTRACTOR: Boland Construction Great Falls, MT	DEQ CONTRACT NUMBER
HAS ANYTHING DEVELOPED ON THE WORK WHICH MIGHT LEAD TO A CHANGE ORDER OR FINDING OF FACT? ☐ NO ☐ YES	WEATHER **Sunny**
HEALTH AND SAFETY Was a Job Safety Meeting held this date? ☐ NO ☐ YES	TEMPERATURE MINIMUM **60** MAXIMUM **85**

NUMBER OF CONTRACTOR'S EMPLOYEES

SUPERVISORY	OPERATORS	LABORERS	TOTAL
Steve C.	**5**	**6**	
Top of hill	**2**		

24 HOUR PRECIPITATION: **None**

SUBCONTRACTORS ON SITE

COMPANY NAME	TOTAL EMPLOYEES
1. **Detailed Concrete...well house wall forms**	**3**
2. **NCI surveyor**	**1**

List the major items of equipment

	units	EQUIPMENT DESCRIPTION	Hours	Comments	
1.	**2**	**Digging Backhoes**			
2.	**2**	**Compacting Backhoes**			
3.	**2**	**Frontend Loaders at Trenches**			
4.	**1**	**Frontend Loader Top of Hill also**			
5.		**Compaction Equipment**			
6.	**1**	**Backhoe at top of hill**			
7.					
8.					

Notes:

CONSTRUCTION DAILY ACTIVITY REPORT

WORK PERFORMED TODAY

	LOCATION	BID ITEM NUMBER	DESCRIPTION OF WORK PERFORMED
1.	**Fire hall line**	**8" water**	**Started 18+62 ended at 19+85, excavated for AR manhole**
2.			**Using imported type 1, line had lots of rocks**
3.	**Upper line**		**started 4+60 ended 5+50 using imported type 1 bedding**
4.			
5.	**Top of hill**		**Stripped footing and Formed & rebar for well house walls.**
6.			
7.	**other**		**Also doing exploratory for utilities**

REASON FOR NO WORK:

INFORMATION ON PROGRESS OF WORK – (Causes for delays, extent of delays, Plant, materials, etc.)

MATERIALS DELIVERED TO SITE

	DESCRIPTION
1.	**Wall forms on tank hill**
2.	
3.	

NOTE –

INSPECTIONS AND TEST (Include comment pertaining to contractors activities)

	TESTS	RESULTS		COMMENT
1.	Density tests			
2.				

SAMPLES COLLECTED

	SAMPLE TYPE	SAMPLE ID	COMMENTS
1.			
2.			
3.			

CONSTRUCTION DAILY ACTIVITY REPORT

VERBAL INSTRUCTIONS GIVEN TO CONTRACTOR

	NAMES	INSTRUCTION	REACTION	REMARKS
1.				
2.				
3.				
4.				

NOTES –

DESIGN MODIFICATIONS

	DESCRIPTION OF MODIFICATION	REASON	ENGINEER APPROVAL?
1.			
2.			

VISITORS

	TIME	NAME	REPRESENTING	REMARKS
1.				
2.				
3.				
4.				
5.				

NOTES w/ Steve: 1) with pit-run over run, he discovered Dickman was not subtracting the weight of the truck on the quantities 2) stripping topsoil at tank hill road, do not strip and remove the 6" because this put road in hole, asked him to put the stripping back on subgrade, 3) Kent on site and helped locate existing water service curb stops 4) agreed to Greg's request (fire hall line) to move the fire hall hydrant away from tree and propane tank

REMARKS – (Include controversial matters, information, instructions, disagreements, or any other miscellaneous remarks):

OVERSIGHT SIGNATURE	DATE	PROJECT MANAGER INITIALS	DATE

CONSTRUCTION DAILY ACTIVITY REPORT

TO: Montana Department of Environmental Quality Remediation Division - Mine Waste Cleanup Bureau Helena, MT Attn: Tom Henderson	REPORT NUMBER **#10**
PROJECT: Sand Coulee, water system replacement	DATE **Friday 8-29-2014**
CONTRACTOR: Boland Construction Great Falls, MT	DEQ CONTRACT NUMBER
HAS ANYTHING DEVELOPED ON THE WORK WHICH MIGHT LEAD TO A CHANGE ORDER OR FINDING OF FACT? ☐ NO ☐ YES	WEATHER **Sunny**
HEALTH AND SAFETY Was a Job Safety Meeting held this date? ☐ NO ☐ YES	TEMPERATURE MINIMUM **60** MAXIMUM **80**

NUMBER OF CONTRACTOR'S EMPLOYEES				24 HOUR PRECIPITATION
SUPERVISORY	OPERATORS	LABORERS	TOTAL	**0**
Steve C.	**5**	**6**		
At hill	**2**			

SUBCONTRACTORS ON SITE

COMPANY NAME	TOTAL EMPLOYEES
1.	

List the major items of equipment

	units	EQUIPMENT DESCRIPTION		Hours	Comments	
1.		**2**	**Digging Backhoes**			
		2	**Compacting Backhoes**			
		2	**Frontend Loaders at Trenches**			
		1	**Frontend Loader Top of Hill also**			
			Compaction Equipment			
		1	**Backhoe at top of hill**			
		1	**Vac truck**			
2.						
3.						

Notes:

CONSTRUCTION DAILY ACTIVITY REPORT

WORK PERFORMED TODAY

	LOCATION	BID ITEM NUMBER	DESCRIPTION OF WORK PERFORMED
1.	**Firehall**		**8" Started: 19+05 Ended: 21+00**
2.	**Upper**		**8" Started: 7+00 Ended: 8+29**
3.	**Tank**		**Formed walls, placed rebar, worked on access road.**
4.	**Utility**		**Locates**
5.			
6.			
7.			

REASON FOR NO WORK:

INFORMATION ON PROGRESS OF WORK – (Causes for delays, extent of delays, Plant, materials, etc.)

MATERIALS DELIVERED TO SITE

	DESCRIPTION
1.	
2.	
3.	

NOTE –

INSPECTIONS AND TEST (Include comment pertaining to contractors activities)

	TESTS	RESULTS		COMMENT
1.	**Soil Density**			
2.				

SAMPLES COLLECTED

	SAMPLE TYPE	SAMPLE ID	COMMENTS
1.			
2.			
3.			

CONSTRUCTION DAILY ACTIVITY REPORT

VERBAL INSTRUCTIONS GIVEN TO CONTRACTOR

	NAMES	INSTRUCTION	REACTION	REMARKS
1.				
2.				
3.				
4.				

NOTES –

DESIGN MODIFICATIONS

	DESCRIPTION OF MODIFICATION	REASON	ENGINEER APPROVAL?
1.			
2.			

VISITORS

	TIME	NAME	REPRESENTING	REMARKS
1.				
2.				
3.				
4.				
5.				

NOTES –

REMARKS – (Include controversial matters, information, instructions, disagreements, or any other miscellaneous remarks):

Ralph checked well house wall forms and steel – okay.

Took samples for proctors FH Line 20+00 & Upper Line 6+75.

OVERSIGHT SIGNATURE	DATE	PROJECT MANAGER INITIALS	DATE

CONSTRUCTION DAILY ACTIVITY REPORT

0

TO: Montana Department of Environmental Quality Remediation Division - Mine Waste Cleanup Bureau Helena, MT Attn: Tom Henderson	REPORT NUMBER **#11**
PROJECT: Sand Coulee, water system replacement	DATE **Tuesday, 9-2-2014**
CONTRACTOR: Boland Construction Great Falls, MT	DEQ CONTRACT NUMBER
HAS ANYTHING DEVELOPED ON THE WORK WHICH MIGHT LEAD TO A CHANGE ORDER OR FINDING OF FACT? **Note: Day (9-1-2014) was Labor Day and no work.** ☐ NO ☐ YES	WEATHER **Partly Cloudy**
HEALTH AND SAFETY Was a Job Safety Meeting held this date? ☐ NO ☐ YES	TEMPERATURE MINIMUM **60** / MAXIMUM **75**

NUMBER OF CONTRACTOR'S EMPLOYEES

SUPERVISORY	OPERATORS	LABORERS	TOTAL
Steve C.	**5**	**6**	
At hill	**2**		

24 HOUR PRECIPITATION: **0**

SUBCONTRACTORS ON SITE

COMPANY NAME	TOTAL EMPLOYEES
1. **Detailed Concrete...well house wall forms and pour.**	**3**
2. **Andre Construction – Meter Pit Install at existing 6" water**	**3**

List the major items of equipment

	units	EQUIPMENT DESCRIPTION	Hours	Comments	
1.	**2**	**Digging Backhoes**			
2.	**2**	**Compacting Backhoes**			
3.	**2**	**Frontend Loaders at Trenches**			
4.	**1**	**Frontend Loader Top of Hill also**			
5.		**Compaction Equipment**			
6.	**1**	**Backhoe at top of hill**			
7.	**1**	**Skid steer Cleaning trench area**			

Notes:

CONSTRUCTION DAILY ACTIVITY REPORT

WORK PERFORMED TODAY

	LOCATION	BID ITEM NUMBER	DESCRIPTION OF WORK PERFORMED
1.	**Fire Hall Line**	**8" Water**	**Started 21+00 ended 22+00**
2.			**stopped using imported bedding at 21+28**
3.	**Upper Line**	**8" water**	**Started 8+29 ended 8+50 using imported type 1 bedding.**
4.	**Top of Hill**		**Concrete wall pour at 1:00 –wall forms & rebar were done. installed 12" PVC culvert**
5.	**Other**		**Also doing exploratory for utilities.**
6.	**Other**		**Andre Excavation meter pits finished crew at Upper Line.**
7.	**Finish crew**		**2 upper line**

REASON FOR NO WORK:

INFORMATION ON PROGRESS OF WORK – (Causes for delays, extent of delays, Plant, materials, etc.)

MATERIALS DELIVERED TO SITE

	DESCRIPTION
1.	**Dickman gravel to top of hill.**
2.	
3.	

NOTE –

INSPECTIONS AND TEST (Include comment pertaining to contractors activities)

	TESTS	RESULTS		COMMENT
1.				
2.				

SAMPLES COLLECTED

	SAMPLE TYPE	SAMPLE ID	COMMENTS
1.			
2.			
3.			

CONSTRUCTION DAILY ACTIVITY REPORT

VERBAL INSTRUCTIONS GIVEN TO CONTRACTOR

	NAMES	INSTRUCTION	REACTION	REMARKS
1.				
2.				
3.				
4.				

NOTES –

DESIGN MODIFICATIONS

	DESCRIPTION OF MODIFICATION	REASON	ENGINEER APPROVAL?
1.			
2.			

VISITORS

	TIME	NAME	REPRESENTING	REMARKS
1.				
2.				
3.				
4.				
5.				

NOTES – **w/Steve: 1) OK to move w/l at Upper Line away from edge of bluff.**
2) Could stop using import bedding at fire house line 21+28, back fill is brown loamy material.
3) Progress meeting was held today.

REMARKS – (Include controversial matters, information, instructions, disagreements, or any other miscellaneous remarks):

OVERSIGHT SIGNATURE	DATE	PROJECT MANAGER INITIALS	DATE

CONSTRUCTION DAILY ACTIVITY REPORT

0

TO: Montana Department of Environmental Quality Remediation Division - Mine Waste Cleanup Bureau Helena, MT Attn: Tom Henderson	REPORT NUMBER **#12**
PROJECT: Sand Coulee, water system replacement	DATE **Wednesday, 9-3-2014**
CONTRACTOR: Boland Construction Great Falls, MT	DEQ CONTRACT NUMBER
HAS ANYTHING DEVELOPED ON THE WORK WHICH MIGHT LEAD TO A CHANGE ORDER OR FINDING OF FACT? ☐ NO ☐ YES	WEATHER **Cloudy** **Some Rain**
HEALTH AND SAFETY Was a Job Safety Meeting held this date? ☐ NO ☐ YES	TEMPERATURE MINIMUM **60** / MAXIMUM

NUMBER OF CONTRACTOR'S EMPLOYEES				24 HOUR PRECIPITATION
SUPERVISORY	OPERATORS	LABORERS	TOTAL	**0**
Steve C.	**5**	**6**		
At hill	**2**			

SUBCONTRACTORS ON SITE

COMPANY NAME	TOTAL EMPLOYEES
1. **Detailed Concrete...well house wall forms and pour.**	**2**
2. **Andre Construction – Meter Pit Install at existing 6" water**	**3**
3. **Fusion guy for Fusible PVC joints (making 60').**	**1**

List the major items of equipment

	units	EQUIPMENT DESCRIPTION	Hours	Comments	
1.	**2**	**Digging Backhoes**			
2.	**2**	**Compacting Backhoes**			
3.	**2**	**Frontend Loaders at Trenches**			
4.	**1**	**Frontend Loader Top of Hill also**			
5.		**Compaction Equipment**			
6.	**1**	**Backhoe at top of hill**			
7.	**1**	**Skid steer Cleaning trench area**			
8.	**1**	**Vac. Truck**			

Notes:

CONSTRUCTION DAILY ACTIVITY REPORT

WORK PERFORMED TODAY

	LOCATION	BID ITEM NUMBER	DESCRIPTION OF WORK PERFORMED
1.	**Fire Hall Line**		**Putting in Fire Hydrant Line at Hall.**
2.	**Upper Line**		**8" Started: 9+61 Ended: 11+20 (installed trench plug at design loc)**
3.	**Tank**		**Stripped wall forms and worked on access road.**
4.	**Utility**		**Locates /exploring**
5.	**Andre**		**Meter Pits**
6.	**Finish Crew**		
7.	**Fusion Guy**		**To Connect PVC for Directional Drill (Redid the 4 – 60' lengths).**

REASON FOR NO WORK:

INFORMATION ON PROGRESS OF WORK – (Causes for delays, extent of delays, Plant, materials, etc.)

MATERIALS DELIVERED TO SITE

	DESCRIPTION
1.	**1 ½" Base Course Gravel for Top of Hill – Dickman.**
2.	
3.	

NOTE –

INSPECTIONS AND TEST (Include comment pertaining to contractors activities)

	TESTS	RESULTS		COMMENT
1.	**Soil Density**			
2.				

SAMPLES COLLECTED

	SAMPLE TYPE	SAMPLE ID	COMMENTS
1.			
2.			
3.			

CONSTRUCTION DAILY ACTIVITY REPORT

VERBAL INSTRUCTIONS GIVEN TO CONTRACTOR

	NAMES	INSTRUCTION	REACTION	REMARKS
1.				
2.				
3.				
4.				

NOTES –

DESIGN MODIFICATIONS

	DESCRIPTION OF MODIFICATION	REASON	ENGINEER APPROVAL?
1.			
2.			

VISITORS

	TIME	NAME	REPRESENTING	REMARKS
1.				
2.				
3.				
4.				
5.				

NOTES –

REMARKS – (Include controversial matters, information, instructions, disagreements, or any other miscellaneous remarks):

1. **Talked to Steve about relocating FH & GV at Church and moving main at Dahn's line.**
2. **Steve showed Ralph high ground water at meter pit location at existing 6" water. Also, existing curb stop box all corroded. Ralph visited with Mark Rhodes and office on what to do.**
3. **The existing 6" main seems higher also may need to get shorter FH.**
4. **The existing 1.5 "water line at fire hall line 22+59; not what was shown on plans. I authorized Steve to do exploratory.**
5. **The fire hall crew was putting in fire hydrant and dug up fire hall drain pipe they replaced.**
6. **I said they could bend slab bar 45° - not 90° at well house to get room to compact subgrade.**
7. **Approved more exploratory at 22+50 Fire Hall Line.**

OVERSIGHT SIGNATURE	DATE	PROJECT MANAGER INITIALS	DATE

CONSTRUCTION DAILY ACTIVITY REPORT

0

TO: Montana Department of Environmental Quality Remediation Division - Mine Waste Cleanup Bureau Helena, MT Attn: Tom Henderson	REPORT NUMBER **#13**
PROJECT: Sand Coulee, water system replacement	DATE **Thursday, 9-4-2014**
CONTRACTOR: Boland Construction Great Falls, MT	DEQ CONTRACT NUMBER
HAS ANYTHING DEVELOPED ON THE WORK WHICH MIGHT LEAD TO A CHANGE ORDER OR FINDING OF FACT? ☐ NO ☐ YES	WEATHER **Partly Cloudy**
HEALTH AND SAFETY Was a Job Safety Meeting held this date? ☐ NO ☐ YES	TEMPERATURE MINIMUM **60** MAXIMUM **75**

NUMBER OF CONTRACTOR'S EMPLOYEES				24 HOUR PRECIPITATION
SUPERVISORY	OPERATORS	LABORERS	TOTAL	**0**
Steve C.	**5**	**6**		
At hill	**2**			

SUBCONTRACTORS ON SITE	
COMPANY NAME	TOTAL EMPLOYEES
1. **Andre Construction – Meter Pit Install at existing 6" water**	**3**

List the major items of equipment

	units	EQUIPMENT DESCRIPTION	Hours	Comments	
1.	**2**	**Digging Backhoes**			
2.	**2**	**Compacting Backhoes**			
3.	**2**	**Frontend Loaders at Trenches**			
4.	**1**	**Frontend Loader Top of Hill also**			
5.		**Compaction Equipment**			
6.	**1**	**Backhoe at top of hill**			
7.	**1**	**Skid steer Cleaning trench area**			

Notes:

CONSTRUCTION DAILY ACTIVITY REPORT

WORK PERFORMED TODAY

	LOCATION	BID ITEM NUMBER	DESCRIPTION OF WORK PERFORMED
1.	**Fire Hall Line**	**6" Water**	**Finished 6" Fire Line to FH at Fire Hall. Set air release manhole. Using imported bedding on Fire Line.**
2.	**Upper Line**	**8" Water**	**8" Started: 11+20 Ended: at noon 11+80 using imported Type 1 Bedding. spent rest of day prep for next strecths**
3.	**Top of Hill**		**Backfilling inside and outside of well house walls. Installed insulation boards inside of foundation walls.**
4.	**Other (two crews)**		**one doing Boland's exploratory utilities and for exploratory payment.**
5.	**Other**		**Andre Excavation meter pits at existing 6" water.**
6.	**Finish Crew**		**at Upper Line & Gulch Lane**

REASON FOR NO WORK:

INFORMATION ON PROGRESS OF WORK – (Causes for delays, extent of delays, Plant, materials, etc.)

MATERIALS DELIVERED TO SITE

	DESCRIPTION
1.	
2.	
3.	

NOTE –

INSPECTIONS AND TEST (Include comment pertaining to contractors activities)

	TESTS	RESULTS		COMMENT
1.	NCI Density testing			
2.				

SAMPLES COLLECTED

	SAMPLE TYPE	SAMPLE ID	COMMENTS
1.			
2.			
3.			

CONSTRUCTION DAILY ACTIVITY REPORT

VERBAL INSTRUCTIONS GIVEN TO CONTRACTOR

	NAMES	INSTRUCTION	REACTION	REMARKS
1.				
2.				
3.				
4.				

NOTES –

DESIGN MODIFICATIONS

	DESCRIPTION OF MODIFICATION	REASON	ENGINEER APPROVAL?
1.			
2.			

VISITORS

	TIME	NAME	REPRESENTING	REMARKS
1.				
2.				
3.				
4.				
5.				

NOTES – **w/Steve: 1) OK to move w/l easterly at Church to get away from existing water valves.**
2) Doing (payable) exploratory by existing valves at Church and at 1 ½"w/l going by Church.
3) told Steve and Barry they need to let Kent know what curb stops to locate, Kent said he may be able to do locating on Saturday
4) told Barry we needed a proctor for density testing at well house backfill
5) Ralph attended a phone meeting at Boland's with tank manufacturer, biggest priority was to get rebar shops started

REMARKS – (Include controversial matters, information, instructions, disagreements, or any other miscellaneous remarks):

OVERSIGHT SIGNATURE	DATE	PROJECT MANAGER INITIALS	DATE

CONSTRUCTION DAILY ACTIVITY REPORT

0

TO: Montana Department of Environmental Quality Remediation Division - Mine Waste Cleanup Bureau Helena, MT Attn: Tom Henderson	REPORT NUMBER **#16**
PROJECT: Sand Coulee, water system replacement	DATE **Tuesday, 9-9-2014**
CONTRACTOR: Boland Construction Great Falls, MT	DEQ CONTRACT NUMBER
HAS ANYTHING DEVELOPED ON THE WORK WHICH MIGHT LEAD TO A CHANGE ORDER OR FINDING OF FACT? ☐ NO ☐ YES	WEATHER **Misty and Cloudy**
HEALTH AND SAFETY Was a Job Safety Meeting held this date? ☐ NO ☐ YES	TEMPERATURE MINIMUM **40** MAXIMUM **50**

NUMBER OF CONTRACTOR'S EMPLOYEES

SUPERVISORY	OPERATORS	LABORERS	TOTAL
Steve C.	**6**	**6**	
	2	**6**	

24 HOUR PRECIPITATION: **0**

SUBCONTRACTORS ON SITE

COMPANY NAME	TOTAL EMPLOYEES
1. **Andre Construction – Meter Pit Install at dry areas #522 & #524**	**3**
2. **Directional drilling subcontractor**	**3**

List the major items of equipment

	units	EQUIPMENT DESCRIPTION	Hours	Comments	
1.	**5**	**Excavators**			
2.	**2**	**Loaders**			
3.					
4.					
5.					
6.					

Notes:

CONSTRUCTION DAILY ACTIVITY REPORT

WORK PERFORMED TODAY

	LOCATION	BID ITEM NUMBER	DESCRIPTION OF WORK PERFORMED
1.	**FH Line**		**23+00 to 23+80**
2.	**Rusty Ditch**		**14+90 to 16+00, 14+30 to 13+50**
3.	**Top of Hill**		**Nothing**
4.	**Exploratory**		**2 Crews (Payable for water service at #40 and Service at Church).**
5.	**Other**		**Andre finished #528 Dusko Line. Moved to 518 (behind Fire Hall).**
6.	**Directional Drill**		**12+54 to 13+14 (Rusty Ditch) and 16+64 to 16+04**

REASON FOR NO WORK:

INFORMATION ON PROGRESS OF WORK – (Causes for delays, extent of delays, Plant, materials, etc.)

Steve discuss on payable exploratory. Need to track hours better, Steve said we had 51 hours as of Friday; 11.5 hours on Monday the 8th.

MATERIALS DELIVERED TO SITE

	DESCRIPTION
1.	
2.	
3.	

NOTE –

INSPECTIONS AND TEST (Include comment pertaining to contractors activities)

	TESTS	RESULTS		COMMENT
1.	**NCI Density testing**			
2.				

SAMPLES COLLECTED

	SAMPLE TYPE	SAMPLE ID	COMMENTS
1.			
2.			
3.			

CONSTRUCTION DAILY ACTIVITY REPORT

VERBAL INSTRUCTIONS GIVEN TO CONTRACTOR

	NAMES	INSTRUCTION	REACTION	REMARKS
1.				
2.				
3.				
4.				

NOTES –

DESIGN MODIFICATIONS

	DESCRIPTION OF MODIFICATION	REASON	ENGINEER APPROVAL?
1.			
2.			

VISITORS

	TIME	NAME	REPRESENTING	REMARKS
1.				
2.				
3.				
4.				
5.				

NOTES – **Steve – 1) Need to check with Dave N. regarding property pins at meter pit locations.**
2) We need to track our "payable" exploratory better.

REMARKS – (Include controversial matters, information, instructions, disagreements, or any other miscellaneous remarks):

OVERSIGHT SIGNATURE	DATE	PROJECT MANAGER INITIALS	DATE

CONSTRUCTION DAILY ACTIVITY REPORT

0

TO: Montana Department of Environmental Quality Remediation Division - Mine Waste Cleanup Bureau Helena, MT Attn: Tom Henderson	REPORT NUMBER **#14**
PROJECT: Sand Coulee, water system replacement	DATE **Friday, 9-5-2014**
CONTRACTOR: Boland Construction Great Falls, MT	DEQ CONTRACT NUMBER
HAS ANYTHING DEVELOPED ON THE WORK WHICH MIGHT LEAD TO A CHANGE ORDER OR FINDING OF FACT? ☐ NO ☐ YES	WEATHER **Clear** **Mostly Calm**
HEALTH AND SAFETY Was a Job Safety Meeting held this date? ☐ NO ☐ YES	TEMPERATURE MINIMUM **45** MAXIMUM **75**

NUMBER OF CONTRACTOR'S EMPLOYEES				24 HOUR PRECIPITATION
SUPERVISORY	OPERATORS	LABORERS	TOTAL	**0**
1	**5**	**8**		

SUBCONTRACTORS ON SITE

COMPANY NAME	TOTAL EMPLOYEES
1. **Andre Construction – Meter Pits**	**2**

List the major items of equipment

	units	EQUIPMENT DESCRIPTION	Hours	Comments	
1.	**5**	**Excavator**			
2.	**2**	**Loaders**			
3.	**1**	**Skidsteer**			
4.					
5.					
6.					
7.					

Notes: Discussed continuing excavation of air release manhole and freezing potential.
Discussed directional drill boring pit locations.

CONSTRUCTION DAILY ACTIVITY REPORT

WORK PERFORMED TODAY

	LOCATION	BID ITEM NUMBER	DESCRIPTION OF WORK PERFORMED
1.	**Fire Hall Line**	**8" Water**	**8" Water main +/- 22+00 – 22+59.**
2.	**Dusko Alley**	**8" Water**	**8" Water main +/- 1+20 – 3+00.**
3.	**Tank Site**		**Backfill well house foundation walls.**
4.	**Dusko Alley**		**Hydrant 2+68**
5.	**Gulch Lane**		**Backfill meter pits.**
6.	**Exploratory**		

REASON FOR NO WORK:

INFORMATION ON PROGRESS OF WORK – (Causes for delays, extent of delays, Plant, materials, etc.)

MATERIALS DELIVERED TO SITE

	DESCRIPTION
1.	
2.	
3.	

NOTE –

INSPECTIONS AND TEST (Include comment pertaining to contractors activities)

	TESTS	RESULTS		COMMENT
1.	**Soil Density**			
2.				

SAMPLES COLLECTED

	SAMPLE TYPE	SAMPLE ID	COMMENTS
1.			
2.			
3.			

CONSTRUCTION DAILY ACTIVITY REPORT

VERBAL INSTRUCTIONS GIVEN TO CONTRACTOR

	NAMES	INSTRUCTION	REACTION	REMARKS
1.				
2.				
3.				
4.				

NOTES –

DESIGN MODIFICATIONS

	DESCRIPTION OF MODIFICATION	REASON	ENGINEER APPROVAL?
1.			
2.			

VISITORS

	TIME	NAME	REPRESENTING	REMARKS
1.	**12:00p.m.**	**Mark Rhodes**	**Hydrometrics**	
2.				
3.				
4.				
5.				

NOTES –

REMARKS – (Include controversial matters, information, instructions, disagreements, or any other miscellaneous remarks):

OVERSIGHT SIGNATURE	DATE	PROJECT MANAGER INITIALS	DATE

CONSTRUCTION DAILY ACTIVITY REPORT

TO: Montana Department of Environmental Quality Remediation Division - Mine Waste Cleanup Bureau Helena, MT Attn: Tom Henderson	REPORT NUMBER **#15**
PROJECT: Sand Coulee, water system replacement	DATE **Monday, 9-8-2014**
CONTRACTOR: Boland Construction Great Falls, MT	DEQ CONTRACT NUMBER
HAS ANYTHING DEVELOPED ON THE WORK WHICH MIGHT LEAD TO A CHANGE ORDER OR FINDING OF FACT? ☐ NO ☐ YES	WEATHER **Partly Cloudy**
HEALTH AND SAFETY Was a Job Safety Meeting held this date? ☐ NO ☐ YES	TEMPERATURE MINIMUM **60** MAXIMUM **75**

NUMBER OF CONTRACTOR'S EMPLOYEES

SUPERVISORY	OPERATORS	LABORERS	TOTAL
Steve C.	**5**	**6**	
At hill	**2**		

24 HOUR PRECIPITATION: **0**

SUBCONTRACTORS ON SITE

COMPANY NAME	TOTAL EMPLOYEES
1. **Andre Construction – Meter Pit Install at existing 6" water**	**3**
2. **Directional drilling subcontractor**	**3**

List the major items of equipment

	units	EQUIPMENT DESCRIPTION	Hours	Comments	
1.	**2**	**Digging Backhoes**			
2.	**2**	**Compacting Backhoes**			
3.	**2**	**Frontend Loaders at Trenches**			
4.	**1**	**Frontend Loader Top of Hill also**			
5.		**Compaction Equipment**			
6.	**1**	**Backhoe at top of hill**			
7.	**2**	**Utility Location Equipment**		**(2 crews, one payable, one not)**	

Notes:

CONSTRUCTION DAILY ACTIVITY REPORT

WORK PERFORMED TODAY

	LOCATION	BID ITEM NUMBER	DESCRIPTION OF WORK PERFORMED
1.	**West Dahn's**	**8" Water**	**Working on the area where valves and tees are installed. Using imported bedding.**
2.	**Dusko Alley**	**8" Water**	**8" Started: 3+40 Using imported Type 1 Bedding "partially" (check stationing), spent part of the day prep for directional drilling. Completed direct drilling at Rusty ditch line 14+30 to 14+90.**
3.	**Top of Hill**		**Backfilling with gravel inside and outside with native mat'l at well house walls.**
4.	**Other (two crews)**		**One doing Boland's exploratory utilities and for exploratory payment.**
5.	**Other**		**Andre Excavation meter pits at Dusko's Alley**
6.			

REASON FOR NO WORK:

INFORMATION ON PROGRESS OF WORK – (Causes for delays, extent of delays, Plant, materials, etc.)

Completed directional drill.

MATERIALS DELIVERED TO SITE

	DESCRIPTION
1.	
2.	
3.	

NOTE –

INSPECTIONS AND TEST (Include comment pertaining to contractors activities)

	TESTS	RESULTS		COMMENT
1.	**NCI Density testing**			
2.				

SAMPLES COLLECTED

	SAMPLE TYPE	SAMPLE ID	COMMENTS
1.			
2.			
3.			

CONSTRUCTION DAILY ACTIVITY REPORT

VERBAL INSTRUCTIONS GIVEN TO CONTRACTOR

	NAMES	INSTRUCTION	REACTION	REMARKS
1.				
2.				
3.				
4.				

NOTES –

DESIGN MODIFICATIONS

	DESCRIPTION OF MODIFICATION	REASON	ENGINEER APPROVAL?
1.			
2.			

VISITORS

	TIME	NAME	REPRESENTING	REMARKS
1.				
2.				
3.				
4.				
5.				

NOTES – **w/Steve: 1) Discussed change on meter pit locations in travel way – will leave service alignment as is, but beef up area around pit. Will not dog leg service piping to get pit out of travel way**

2) Doing (payable) exploratory by existing valves at Church and at 1 ½"w/l going by Church.

3) Went through the 406 directional drillers experience resume with fusible PVC. Which he had not pulled before – Barry was to provide letter stating he would be responsible. Ralph looked inside of pipe after it was installed and it looked good.

REMARKS – (Include controversial matters, information, instructions, disagreements, or any other miscellaneous remarks):

OVERSIGHT SIGNATURE	DATE	PROJECT MANAGER INITIALS	DATE

CONSTRUCTION DAILY ACTIVITY REPORT

0

TO: Montana Department of Environmental Quality Remediation Division - Mine Waste Cleanup Bureau Helena, MT Attn: Tom Henderson	REPORT NUMBER **#17**
PROJECT: Sand Coulee, water system replacement	DATE **Wednesday, 9-10-2014**
CONTRACTOR: Boland Construction Great Falls, MT	DEQ CONTRACT NUMBER
HAS ANYTHING DEVELOPED ON THE WORK WHICH MIGHT LEAD TO A CHANGE ORDER OR FINDING OF FACT? ☐ NO ☐ YES	WEATHER **Misty and cloudy and rainy**
HEALTH AND SAFETY Was a Job Safety Meeting held this date? ☐ NO ☐ YES	TEMPERATURE MINIMUM **40** MAXIMUM **50**

NUMBER OF CONTRACTOR'S EMPLOYEES

SUPERVISORY	OPERATORS	LABORERS	TOTAL
Steve C.	**5**	**6**	

24 HOUR PRECIPITATION: **.2**

SUBCONTRACTORS ON SITE

COMPANY NAME	TOTAL EMPLOYEES
1. **Andre Construction – Meter Pit Install at dry areas**	**3**
2. **Directional drilling subcontractor**	**3**

List the major items of equipment

	units	EQUIPMENT DESCRIPTION	Hours	Comments	
1.	**3**	**Digging Backhoes (one for digging directional pits)**			
2.	**2**	**Compacting Backhoes**			
3.	**2**	**Frontend Loaders at Trenches**			
4.	**1**	**Frontend Loader at Top of Hill also**			
5.		**Compaction Equipment**			
6.	**1**	**Utility Location Equipment (2-sets, one payable other is Boland).**			
7.					

Notes:

CONSTRUCTION DAILY ACTIVITY REPORT

WORK PERFORMED TODAY

	LOCATION	BID ITEM NUMBER	DESCRIPTION OF WORK PERFORMED
1.	**West Dahn's**	**8" Water**	**Started 23+00. Using imported bedding. Ralph approved relocating Fire Hydrant at 23+95.**
2.	**Dusko Alley**	**8" Water**	**Laying pipe at directional drilling connections 13+50 to 14+30. Rusty Ditch line 14+30 to 14+90 also up at East Hunter on Fire Line x-ing and at Rusty Ditch crossing at bridge.**
3.	**Top of Hill**		**Nothing**
4.	**Other (two crews)**		**One doing Boland's explor utilities and one for explor payment**
5.	**Other**		**Andre Excavation meter pits at Upper Lane #56.**
6.	**Directional Drill**		**See Dusko Crew log above.**

REASON FOR NO WORK:

INFORMATION ON PROGRESS OF WORK – (Causes for delays, extent of delays, Plant, materials, etc.)

Completed directional drill at Rusty Ditch at Upper Line.

MATERIALS DELIVERED TO SITE

	DESCRIPTION
1.	
2.	
3.	

NOTE –

INSPECTIONS AND TEST (Include comment pertaining to contractors activities)

	TESTS	RESULTS		COMMENT
1.	**NCI Density testing**			
2.				

SAMPLES COLLECTED

	SAMPLE TYPE	SAMPLE ID	COMMENTS
1.			
2.			
3.			

CONSTRUCTION DAILY ACTIVITY REPORT

VERBAL INSTRUCTIONS GIVEN TO CONTRACTOR

	NAMES	INSTRUCTION	REACTION	REMARKS
1.				
2.				
3.				
4.				

NOTES –

DESIGN MODIFICATIONS

	DESCRIPTION OF MODIFICATION	REASON	ENGINEER APPROVAL?
1.			
2.			

VISITORS

	TIME	NAME	REPRESENTING	REMARKS
1.				
2.				
3.				
4.				
5.				

NOTES – **Steve – 1) Pulled directional drill at Rusty Creek away from bridge at gulch lane**
2) Relocated fire hydrant (again) at Dahn West.
3) Approved 12″x12″x2″ precast paver for curb stop, in lieu of gravel cu. ft. as shown on spec drawing.
4) Talked about new proctors – They have a higher density number, but are not exactly same material. The higher numbers makes meeting density % tougher

With Barry – 1) need TV the directional drill at 1st Rusty Ditch crossing because could not see through, ran TV camera and pipe had a full diameter.
2) Need to have polyethylene sheet on base gravel before we pour concrete.
3) Barry said he could add gravel base at tank foundation as well as slab.
4) Okay to move hydrant 12+04 Upper Line to allow GV to be put on flat grade, and not on the slope before Rusty Ditch.

REMARKS – (Include controversial matters, information, instructions, disagreements, or any other miscellaneous remarks):

OVERSIGHT SIGNATURE	DATE	PROJECT MANAGER INITIALS	DATE

CONSTRUCTION DAILY ACTIVITY REPORT

0

TO: Montana Department of Environmental Quality Remediation Division - Mine Waste Cleanup Bureau Helena, MT Attn: Tom Henderson	REPORT NUMBER **#18**
PROJECT: Sand Coulee, water system replacement	DATE **Thursday, 9-11-2014**
CONTRACTOR: Boland Construction Great Falls, MT	DEQ CONTRACT NUMBER
HAS ANYTHING DEVELOPED ON THE WORK WHICH MIGHT LEAD TO A CHANGE ORDER OR FINDING OF FACT? ☐ NO ☐ YES	WEATHER **Mist, cloudy and snowy**
HEALTH AND SAFETY Was a Job Safety Meeting held this date? ☐ NO ☐ YES	TEMPERATURE MINIMUM **35** MAXIMUM **50**

NUMBER OF CONTRACTOR'S EMPLOYEES				24 HOUR PRECIPITATION
SUPERVISORY	OPERATORS	LABORERS	TOTAL	**0**
Steve C.	**5**	**6**		

SUBCONTRACTORS ON SITE

COMPANY NAME	TOTAL EMPLOYEES
1. **Andre Construction – Meter Pit Install at dry areas**	**3**
2. **Directional drilling subcontractor**	**3**

List the major items of equipment

	units	EQUIPMENT DESCRIPTION	Hours	Comments	
1.	**3**	**Digging Backhoes (one for digging directional pits)**			
2.	**2**	**Compacting Backhoes**			
3.	**2**	**Frontend Loaders at Trenches**			
4.	**1**	**Frontend Loader at Top of Hill also**			
5.		**Compaction Equipment**			
6.	**1**	**Utility Location Equipment (2-sets, one payable other is Boland).**			
7.					

Notes:

CONSTRUCTION DAILY ACTIVITY REPORT

WORK PERFORMED TODAY

	LOCATION	BID ITEM NUMBER	DESCRIPTION OF WORK PERFORMED
1.	**West Dahn's *(Sheet 5)***	**8" Water**	**Started 23+85. Ended 24+90.**
2.	**Dusko Alley *(Sheet 9 Rusty Ditch)***	**8" Water**	**Started 11+80. Ended 12+54. Bed to directional drill.**
3.	**Top of Hill**		**Forming for slab and placing rebar.**
4.	**Other (two crews)**		**One doing Boland's explor utilities and one for explor payment**
5.	**Other**		**Andre Excavation meter pits at House #67 & #65.**
6.	**Directional Drill**		**At Gulch Lane prepping Rusty Ditch.**

REASON FOR NO WORK:

INFORMATION ON PROGRESS OF WORK – (Causes for delays, extent of delays, Plant, materials, etc.)

MATERIALS DELIVERED TO SITE

	DESCRIPTION
1.	
2.	
3.	

NOTE –

INSPECTIONS AND TEST (Include comment pertaining to contractors activities)

	TESTS	RESULTS		COMMENT
1.	**NCI Density testing**			
2.				

SAMPLES COLLECTED

	SAMPLE TYPE	SAMPLE ID	COMMENTS
1.			
2.			
3.			

CONSTRUCTION DAILY ACTIVITY REPORT

VERBAL INSTRUCTIONS GIVEN TO CONTRACTOR

	NAMES	INSTRUCTION	REACTION	REMARKS
1.				
2.				
3.				
4.				

NOTES –

DESIGN MODIFICATIONS

	DESCRIPTION OF MODIFICATION	REASON	ENGINEER APPROVAL?
1.			
2.			

VISITORS

	TIME	NAME	REPRESENTING	REMARKS
1.				
2.				
3.				
4.				
5.				

NOTES – **Greg asked to move valve on West Dahn from 24+07 to 12+04 due to fiber cables.**
Discussed placement of rebar in thickened slab and at interior and exterior cmu walls.

REMARKS – (Include controversial matters, information, instructions, disagreements, or any other miscellaneous remarks):

OVERSIGHT SIGNATURE	DATE	PROJECT MANAGER INITIALS	DATE

CONSTRUCTION DAILY ACTIVITY REPORT

0

TO: Montana Department of Environmental Quality Remediation Division - Mine Waste Cleanup Bureau Helena, MT Attn: Tom Henderson	REPORT NUMBER **#19**
PROJECT: Sand Coulee, water system replacement	DATE **9/12/14**
CONTRACTOR: Boland Construction Great Falls, MT	DEQ CONTRACT NUMBER
HAS ANYTHING DEVELOPED ON THE WORK WHICH MIGHT LEAD TO A CHANGE ORDER OR FINDING OF FACT? ☐ NO ☐ YES	WEATHER **Sunny/breezy**
HEALTH AND SAFETY Was a Job Safety Meeting held this date? ☐ NO ☐ YES	TEMPERATURE MINIMUM **45** MAXIMUM **60**

NUMBER OF CONTRACTOR'S EMPLOYEES				24 HOUR PRECIPITATION
SUPERVISORY	OPERATORS	LABORERS	TOTAL	**0**
Steve C.	**5**	**6**		

SUBCONTRACTORS ON SITE

COMPANY NAME	TOTAL EMPLOYEES
1. **Andre Construction – Meter Pit Install at dry areas**	**3**
2. **Directional drilling subcontractor**	**3**

List the major items of equipment

	units	EQUIPMENT DESCRIPTION	Hours	Comments	
1.	**3**	**Digging Backhoes (one for digging directional pits)**			
2.	**2**	**Compacting Backhoes**			
3.	**2**	**Frontend Loaders at Trenches**			
4.	**1**	**Frontend Loader at Top of Hill also**			
5.		**Compaction Equipment**			
6.	**1**	**Utility Location Equipment (2-sets, one payable other is Boland).**			
7.					

Notes:

CONSTRUCTION DAILY ACTIVITY REPORT

WORK PERFORMED TODAY

	LOCATION	BID ITEM NUMBER	DESCRIPTION OF WORK PERFORMED
1.	**West Dahn's (sheet 5)**	**8" Water**	**Started at 24+90. Ended at 25+30. Moved alignment down Dahn's Lane SE about 3 ft to stay away from fiber cables and existing main.**
2.	**East Hunter (west of tire station) Rusty Ditch off gulch lane**	**8" Water**	**Both sides tied into directional drill under East Hunter road. Rusty ditch – dewatering and prepping to lay pipe under ditch. Broke 4" main – repaired and placed pipe under rusty ditch.**
3.	**Top of Hill**		**Off**
4.	**Other (two crews)**		**One doing Boland's explor utilities and one for explor payment**
5.	**Other**		**Off**
6.	**Directional Drill**		**Off**

REASON FOR NO WORK:

INFORMATION ON PROGRESS OF WORK – (Causes for delays, extent of delays, Plant, materials, etc.)

MATERIALS DELIVERED TO SITE

	DESCRIPTION
1.	**Dickman delivered pipe bedding.**
2.	
3.	

NOTE –

INSPECTIONS AND TEST (Include comment pertaining to contractors activities)

	TESTS	RESULTS		COMMENT
1.	**NCI Density testing**			
2.				

SAMPLES COLLECTED

	SAMPLE TYPE	SAMPLE ID	COMMENTS
1.			
2.			
3.			

CONSTRUCTION DAILY ACTIVITY REPORT

VERBAL INSTRUCTIONS GIVEN TO CONTRACTOR

	NAMES	INSTRUCTION	REACTION	REMARKS
1.				
2.				
3.				
4.				

NOTES –

DESIGN MODIFICATIONS

	DESCRIPTION OF MODIFICATION	REASON	ENGINEER APPROVAL?
1.			
2.			

VISITORS

	TIME	NAME	REPRESENTING	REMARKS
1.	**11:30**	**Mark Rhodes**	**Hydrometrics**	
2.	**11:30**	**Tom Henderson**	**DEQ**	
3.				
4.				
5.				

NOTES

Well house

-slab needs to be 6 inches thick

-chairs to lift rebar

-doorway pours detail 6 P-4

-conceal conduits P-5

Contractor noted he couldn't see opposite end of pipe under East Hunter road

Made contractor aware bolts must be coated

Exploratory must be approved by NCI

REMARKS – (Include controversial matters, information, instructions, disagreements, or any other miscellaneous remarks):

OVERSIGHT SIGNATURE	DATE	PROJECT MANAGER INITIALS	DATE

CONSTRUCTION DAILY ACTIVITY REPORT

0

TO: Montana Department of Environmental Quality Remediation Division - Mine Waste Cleanup Bureau Helena, MT Attn: Tom Henderson	REPORT NUMBER **#20**
PROJECT: Sand Coulee, water system replacement	DATE **09-15-2014**
CONTRACTOR: Boland Construction Great Falls, MT	DEQ CONTRACT NUMBER
HAS ANYTHING DEVELOPED ON THE WORK WHICH MIGHT LEAD TO A CHANGE ORDER OR FINDING OF FACT? ☐ NO ☐ YES	WEATHER **Clear, mostly calm**
HEALTH AND SAFETY Was a Job Safety Meeting held this date? ☐ NO ☐ YES	TEMPERATURE MINIMUM **50°** MAXIMUM **70°**

NUMBER OF CONTRACTOR'S EMPLOYEES				24 HOUR PRECIPITATION
SUPERVISORY	OPERATORS	LABORERS	TOTAL	
1	**6**	**9**	**16**	**None**

SUBCONTRACTORS ON SITE

COMPANY NAME	TOTAL EMPLOYEES
1. **Andre Construction – Meter Pit Install at dry areas**	**3**
2. **Electric City Concrete**	**?**

List the major items of equipment

	units	EQUIPMENT DESCRIPTION	Hours	Comments	
1.	**3**	**Excavator**			
2.	**2**	**Excavator with roller bucket**			
3.	**2**	**Front Loader**			
4.	**1**	**Skidsteer**			
5.	**2**	**Walk behind sheepsfoot roller**			
6.	**2**	**Soft dig vac trailer**			
7.					

Notes:

CONSTRUCTION DAILY ACTIVITY REPORT

WORK PERFORMED TODAY

	LOCATION	BID ITEM NUMBER	DESCRIPTION OF WORK PERFORMED
1.	**Gulch Lane**		**Backfill at boring pit (± 15+80 to 16+05)**
2.	**Dusko Alley**		**8" water main & vertical bends (± 9+70 to 10+00)**
3.	**Dahn's Lane**		**8" water main (± 25+50 to 26+90)**
4.	**Well House**		**Placed & finished concrete floor slab**
5.	**Dahn's Lane & various water service locations**		**Explore exist 4" water and fiber optic** **Explore water services**
6.	**House # 50 & 70**		**Install meter pits**

REASON FOR NO WORK:

INFORMATION ON PROGRESS OF WORK – (Causes for delays, extent of delays, Plant, materials, etc.)

MATERIALS DELIVERED TO SITE

	DESCRIPTION
1.	
2.	
3.	

NOTE –

INSPECTIONS AND TEST (Include comment pertaining to contractors activities)

	TESTS	RESULTS		COMMENT
1.	Soil density			
2.	Concrete cylinders			

SAMPLES COLLECTED

	SAMPLE TYPE	SAMPLE ID	COMMENTS
1.			
2.			
3.			

CONSTRUCTION DAILY ACTIVITY REPORT

VERBAL INSTRUCTIONS GIVEN TO CONTRACTOR

	NAMES	INSTRUCTION	REACTION	REMARKS
1.				
2.				
3.				
4.				

NOTES –

DESIGN MODIFICATIONS

	DESCRIPTION OF MODIFICATION	REASON	ENGINEER APPROVAL?
1.	**Dahn's Lane water main – realignment 32+50 to 36+00**	**Avoid fiber optic cable**	**Ralph/Idaho**
2.			

VISITORS

	TIME	NAME	REPRESENTING	REMARKS
1.				
2.				
3.				
4.				
5.				

NOTES

REMARKS – (Include controversial matters, information, instructions, disagreements, or any other miscellaneous remarks):

OVERSIGHT SIGNATURE	DATE	PROJECT MANAGER INITIALS	DATE

CONSTRUCTION DAILY ACTIVITY REPORT

0

TO: Montana Department of Environmental Quality Remediation Division - Mine Waste Cleanup Bureau Helena, MT Attn: Tom Henderson	REPORT NUMBER **#21**
PROJECT: Sand Coulee, water system replacement	DATE **Tuesday, 9-16-2014**
CONTRACTOR: Boland Construction Great Falls, MT	DEQ CONTRACT NUMBER
HAS ANYTHING DEVELOPED ON THE WORK WHICH MIGHT LEAD TO A CHANGE ORDER OR FINDING OF FACT? ☐ NO ☐ YES	WEATHER **Sunny**
HEALTH AND SAFETY Was a Job Safety Meeting held this date? ☐ NO ☐ YES	TEMPERATURE MINIMUM **50** MAXIMUM **80**

NUMBER OF CONTRACTOR'S EMPLOYEES

SUPERVISORY	OPERATORS	LABORERS	TOTAL
Steve C.	**5**	**6**	

24 HOUR PRECIPITATION: **0**

SUBCONTRACTORS ON SITE

COMPANY NAME	TOTAL EMPLOYEES
1. **Andre Construction – Meter Pit Install at dry areas**	**3**
2. **Directional drilling subcontractor**	**3**

List the major items of equipment

	units	EQUIPMENT DESCRIPTION	Hours	Comments	
1.	**3**	**Digging Backhoes (one for digging directional pits)**			
2.	**2**	**Compacting Backhoes**			
3.	**2**	**Frontend Loaders at Trenches**			
4.	**1**	**Frontend Loader at Top of Hill also**			
5.		**Compaction Equipment**			
6.	**1**	**Utility Location Equipment (2-sets, one payable other is Boland).**			
7.					

Notes:

CONSTRUCTION DAILY ACTIVITY REPORT

WORK PERFORMED TODAY

	LOCATION	BID ITEM NUMBER	DESCRIPTION OF WORK PERFORMED
1.	**West Dahn's**	**8" Water**	**Ended 27+46 moved hydrant to West side of main due to camper trailer park in original location – excavating west of House 40.**
2.	**Dusko Alley**	**8" Water**	**Tied into new main at 11+00.**
3.	**Top of Hill**		**Off – concrete slab poured Monday.**
4.	**Other (two crews)**		**One doing Boland's explor utilities and one for explor payment**
5.	**Other**		**Andre excavation meter pits at House #63, #531, #537 (#531 & #537 will tie into new line.**
6.	**Directional Drill**		**Off – drilling tomorrow for Boland – finished with other crossings.**

REASON FOR NO WORK:

INFORMATION ON PROGRESS OF WORK – (Causes for delays, extent of delays, Plant, materials, etc.)

MATERIALS DELIVERED TO SITE

	DESCRIPTION
1.	
2.	
3.	

NOTE – **One doing Boland's explor utilities and one for explor payment.**
Exploratory at Rosie's Lane to find service line to House #40.

INSPECTIONS AND TEST (Include comment pertaining to contractors activities)

	TESTS	RESULTS		COMMENT
1.	**NCI Density testing**			
2.				

SAMPLES COLLECTED

	SAMPLE TYPE	SAMPLE ID	COMMENTS
1.			
2.			
3.			

CONSTRUCTION DAILY ACTIVITY REPORT

VERBAL INSTRUCTIONS GIVEN TO CONTRACTOR

	NAMES	INSTRUCTION	REACTION	REMARKS
1.				
2.				
3.				
4.				

NOTES –

DESIGN MODIFICATIONS

	DESCRIPTION OF MODIFICATION	REASON	ENGINEER APPROVAL?
1.			
2.			

VISITORS

	TIME	NAME	REPRESENTING	REMARKS
1.				
2.				
3.				
4.				
5.				

NOTES

Weekly meeting at 10:30 with Water District, DEQ, NCI, and Boland.

REMARKS – (Include controversial matters, information, instructions, disagreements, or any other miscellaneous remarks):

OVERSIGHT SIGNATURE	DATE	PROJECT MANAGER INITIALS	DATE

CONSTRUCTION DAILY ACTIVITY REPORT

0

TO: Montana Department of Environmental Quality Remediation Division - Mine Waste Cleanup Bureau Helena, MT Attn: Tom Henderson	REPORT NUMBER **#22**
PROJECT: Sand Coulee, water system replacement	DATE **Wednesday, 9-17-2014**
CONTRACTOR: Boland Construction Great Falls, MT	DEQ CONTRACT NUMBER
HAS ANYTHING DEVELOPED ON THE WORK WHICH MIGHT LEAD TO A CHANGE ORDER OR FINDING OF FACT? ☐ NO ☐ YES	WEATHER **Clear in A.M. Light Cloud Cover & Cooler in P.M.**
HEALTH AND SAFETY Was a Job Safety Meeting held this date? ☐ NO ☐ YES	TEMPERATURE MINIMUM **65** / MAXIMUM **85**

NUMBER OF CONTRACTOR'S EMPLOYEES

SUPERVISORY	OPERATORS	LABORERS	TOTAL
Steve C.	**6**	**7**	**14**

24 HOUR PRECIPITATION: **0**

SUBCONTRACTORS ON SITE

COMPANY NAME	TOTAL EMPLOYEES
1. **Andre Construction – Meter Pits**	**3**
2. **Directional drilling subcontractor**	**3**

List the major items of equipment

	units	EQUIPMENT DESCRIPTION	Hours	Comments	
1.	**2**	**Excavator**			
2.	**2**	**Excavator w/Roller Bucket**			
3.	**2**	**Front Loader**			
4.	**1**	**Skidsteer**			
5.	**2**	**Soft Dig Vacuum**			
6.					
7.					

Notes:

CONSTRUCTION DAILY ACTIVITY REPORT

WORK PERFORMED TODAY

	LOCATION	BID ITEM NUMBER	DESCRIPTION OF WORK PERFORMED
1.	**Gulch Lane**		**Completed backfill at Bridge Area.**
2.	**Dahn's**		**8" Water Main Rosie's Lane to Dade.**
3.	**Miner's Lane**		**4+90 to 650 8" water main by Directional Drill.**
4.	**Dusko Alley**		**8" water main 4+00 → 4+20.**
5.			**Meter Pits #525, #30 and #40.**
6.			

REASON FOR NO WORK:

INFORMATION ON PROGRESS OF WORK – (Causes for delays, extent of delays, Plant, materials, etc.)

Hit FO (damage to conduit only; fiber okay) cable at intersection of Dahn's Lane and Rosie's Lane. Line was shown on drawings, but not marked on the ground. 3 Rivers on site and instructed Contractor to bury as is.

MATERIALS DELIVERED TO SITE

	DESCRIPTION
1.	
2.	
3.	

NOTE –

INSPECTIONS AND TEST (Include comment pertaining to contractors activities)

	TESTS	RESULTS		COMMENT
1.	**NCI Density testing**			
2.				

SAMPLES COLLECTED

	SAMPLE TYPE	SAMPLE ID	COMMENTS
1.			
2.			
3.			

CONSTRUCTION DAILY ACTIVITY REPORT

VERBAL INSTRUCTIONS GIVEN TO CONTRACTOR

	NAMES	INSTRUCTION	REACTION	REMARKS
1.				
2.				
3.				
4.				

NOTES –

DESIGN MODIFICATIONS

	DESCRIPTION OF MODIFICATION	REASON	ENGINEER APPROVAL?
1.			
2.			

VISITORS

	TIME	NAME	REPRESENTING	REMARKS
1.				
2.				
3.				
4.				
5.				

NOTES

REMARKS – (Include controversial matters, information, instructions, disagreements, or any other miscellaneous remarks):

OVERSIGHT SIGNATURE	DATE	PROJECT MANAGER INITIALS	DATE

CONSTRUCTION DAILY ACTIVITY REPORT

TO: Montana Department of Environmental Quality Remediation Division - Mine Waste Cleanup Bureau Helena, MT Attn: Tom Henderson	REPORT NUMBER **#23**
PROJECT: Sand Coulee, water system replacement	DATE **Thursday, 9-18-2014**
CONTRACTOR: Boland Construction Great Falls, MT	DEQ CONTRACT NUMBER
HAS ANYTHING DEVELOPED ON THE WORK WHICH MIGHT LEAD TO A CHANGE ORDER OR FINDING OF FACT? ☐ NO ☐ YES	WEATHER **Cool** **Smokey** **Breezy**
HEALTH AND SAFETY Was a Job Safety Meeting held this date? ☐ NO ☐ YES	TEMPERATURE MINIMUM **60** MAXIMUM **80**

NUMBER OF CONTRACTOR'S EMPLOYEES				24 HOUR PRECIPITATION
SUPERVISORY	OPERATORS	LABORERS	TOTAL	**0**
Steve C.	**6**	**7**	**14**	

SUBCONTRACTORS ON SITE	
COMPANY NAME	TOTAL EMPLOYEES
1. **Andre Construction – Meter Pits**	**3**

List the major items of equipment

	units	EQUIPMENT DESCRIPTION	Hours	Comments	
1.	**5**	**Excavator**			
2.	**2**	**Front Loaders**			
3.	**1**	**Skidsteer**			
4.	**2**	**Soft Dig Vacuum**			
5.	**1**	**Forklift**			
6.					
7.					

Notes:

CONSTRUCTION DAILY ACTIVITY REPORT

WORK PERFORMED TODAY

	LOCATION	BID ITEM NUMBER	DESCRIPTION OF WORK PERFORMED
1.	**Dahn's Lane**		**Backfilling and compacting between Rosie's Lane and Dade Lane. Excavation, laying pipe North of Dade Lane (Station 29+50) backfilled up to 31+50.**
2.	**House #75 Dade Lane (Jim's Crew)**		**Backfilling and compacting East of House #75 over directional drill pipe. Prepping to go through corals. Moved alignment about 3.5' West from Station 5+00 to 6+00 to avoid post and barn, still within casement.**
3.	**Andre Meter Pits**		**Installing meter pit next to Church.**
4.	**Rosie's Lane**		**2 soft dig vacuums operating on Rosie's Lane; Station 4+50 (found) and 27+80 (found). Excavating to find main at Station 4+50; can't excavate through corrals until main is located.**
5.	**Storage Tank**		**Excavation at Storage Tank location; masonry starting Monday.**
6.			

REASON FOR NO WORK:

INFORMATION ON PROGRESS OF WORK – (Causes for delays, extent of delays, Plant, materials, etc.)

MATERIALS DELIVERED TO SITE

	DESCRIPTION
1.	
2.	
3.	

NOTE – **7 Density Tests taken(2 recompacted). 3 proctors back. 5 Passed. 2 recompacted then passed.**

INSPECTIONS AND TEST (Include comment pertaining to contractors activities)

	TESTS	RESULTS		COMMENT
1.	**NCI Density testing**	**Passed**		**See Note Above.**
2.				

SAMPLES COLLECTED

	SAMPLE TYPE	SAMPLE ID	COMMENTS
1.			
2.			
3.			

CONSTRUCTION DAILY ACTIVITY REPORT

VERBAL INSTRUCTIONS GIVEN TO CONTRACTOR

	NAMES	INSTRUCTION	REACTION	REMARKS
1.				
2.				
3.				
4.				

NOTES –

DESIGN MODIFICATIONS

	DESCRIPTION OF MODIFICATION	REASON	ENGINEER APPROVAL?
1.			
2.			

VISITORS

	TIME	NAME	REPRESENTING	REMARKS
1.				
2.				
3.				
4.				
5.				

NOTES

REMARKS – (Include controversial matters, information, instructions, disagreements, or any other miscellaneous remarks):

OVERSIGHT SIGNATURE	DATE	PROJECT MANAGER INITIALS	DATE

CONSTRUCTION DAILY ACTIVITY REPORT

TO: Montana Department of Environmental Quality Remediation Division - Mine Waste Cleanup Bureau Helena, MT Attn: Tom Henderson	REPORT NUMBER **#24**
PROJECT: Sand Coulee, water system replacement	DATE **Friday, 9-19-2014**
CONTRACTOR: Boland Construction Great Falls, MT	DEQ CONTRACT NUMBER
HAS ANYTHING DEVELOPED ON THE WORK WHICH MIGHT LEAD TO A CHANGE ORDER OR FINDING OF FACT? ☐ NO ☐ YES	WEATHER **Sunny**
HEALTH AND SAFETY Was a Job Safety Meeting held this date? ☐ NO ☐ YES	TEMPERATURE MINIMUM **65** MAXIMUM **80**

NUMBER OF CONTRACTOR'S EMPLOYEES

SUPERVISORY	OPERATORS	LABORERS	TOTAL
Steve C.	**6**	**7**	**14**

24 HOUR PRECIPITATION: **0**

SUBCONTRACTORS ON SITE

COMPANY NAME	TOTAL EMPLOYEES
1. **Andre Construction – Meter Pits**	**3**

List the major items of equipment

	units	EQUIPMENT DESCRIPTION	Hours	Comments	
1.	**5**	**Excavators**			
2.	**2**	**Frontend loaders**			
3.	**1**	**Skidsteer**			
4.	**2**	**Soft Dig Vacuum**			
5.	**1**	**Forklift**			
6.					
7.					

Notes:

CONSTRUCTION DAILY ACTIVITY REPORT

WORK PERFORMED TODAY

	LOCATION	BID ITEM NUMBER	DESCRIPTION OF WORK PERFORMED
1.	**Dahn's Lane (Sheet D-6)**		**Laid pipe to Miner's Lane Station 32+00 Sheet D-6**
2.	**Corrals (Sheet D-10)**		**Start 5+00 End 5+80**
3.	**Andre Meter Pits**		**Off**
4.	**Tank**		**Excavating to foundation grade. Boland over excavated about 18 inches below the bottom of foundation wall to reach weathered bedrock. Clay layer was present at depths ranging from 3 to 5 feet below ground surface. Interior area of tank was also excavated.**
5.	**Well House**		**None**
6.			

REASON FOR NO WORK:

INFORMATION ON PROGRESS OF WORK – (Causes for delays, extent of delays, Plant, materials, etc.)

MATERIALS DELIVERED TO SITE

	DESCRIPTION
1.	
2.	
3.	

NOTE

INSPECTIONS AND TEST (Include comment pertaining to contractors activities)

	TESTS	RESULTS		COMMENT
1.	**NCI Density testing**			
2.				

SAMPLES COLLECTED

	SAMPLE TYPE	SAMPLE ID	COMMENTS
1.			
2.			
3.			

CONSTRUCTION DAILY ACTIVITY REPORT

VERBAL INSTRUCTIONS GIVEN TO CONTRACTOR

	NAMES	INSTRUCTION	REACTION	REMARKS
1.				
2.				
3.				
4.				

NOTES –

DESIGN MODIFICATIONS

	DESCRIPTION OF MODIFICATION	REASON	ENGINEER APPROVAL?
1.			
2.			

VISITORS

	TIME	NAME	REPRESENTING	REMARKS
1.				
2.				
3.				
4.				
5.				

NOTES

- **Page D-13 (moving up the hill) added air release valve manhole at 90 degree bend and changed pipe grade to 6.5 feet below existing ground. Also moved alignment about 4 feet SW and 4 feet SE between station 2+00 to 3+80.**
- **Boland over excavated about 18 inches below bottom of foundation wall to reach weathered bedrock. Clay layer was present at depths ranging from 3 to 5 feet below ground surface. All of clay layer was removed. Interior area of tank was also excavated.**
- **Was informed by locals there may be fuel tanks buried on Miner's Lane (page D-14) across from the post office. Excavated about 6 feet deep next to concrete pad in front of the building and found no indication of buried tanks. The soils did not smell of fuel and soil appeared undisturbed. Will also hit drain field on Miners Lane across from park (Sheet D-14) at about Station 1+30 . Keep alignment as designed.**
- **Repaired leak in existing main under Rusty ditch.**
- **Keep fire hydrants closer to fences.**

REMARKS – (Include controversial matters, information, instructions, disagreements, or any other miscellaneous remarks):

OVERSIGHT SIGNATURE	DATE	PROJECT MANAGER INITIALS	DATE

CONSTRUCTION DAILY ACTIVITY REPORT

TO: Montana Department of Environmental Quality Remediation Division - Mine Waste Cleanup Bureau Helena, MT Attn: Tom Henderson	REPORT NUMBER **#25**
PROJECT: Sand Coulee, water system replacement	DATE **Monday, 9-22-2014**
CONTRACTOR: Boland Construction Great Falls, MT	DEQ CONTRACT NUMBER
HAS ANYTHING DEVELOPED ON THE WORK WHICH MIGHT LEAD TO A CHANGE ORDER OR FINDING OF FACT? ☐ NO ☐ YES	WEATHER **Sunny**
HEALTH AND SAFETY Was a Job Safety Meeting held this date? ☐ NO ☐ YES	TEMPERATURE MINIMUM **65** MAXIMUM **80**

NUMBER OF CONTRACTOR'S EMPLOYEES

SUPERVISORY	OPERATORS	LABORERS	TOTAL
Steve C.	**6**	**7**	**14**

24 HOUR PRECIPITATION: **0**

SUBCONTRACTORS ON SITE

COMPANY NAME	TOTAL EMPLOYEES
1. **Andre Construction – Meter Pits**	**3**

List the major items of equipment

	units	EQUIPMENT DESCRIPTION	Hours	Comments	
1.	**5**	**Excavators**			
2.	**2**	**Frontend loaders**			
3.	**1**	**Skidsteer**			
4.	**2**	**Soft Dig Vacuum**			
5.	**1**	**Forklift**			
6.					
7.					

Notes:

CONSTRUCTION DAILY ACTIVITY REPORT

WORK PERFORMED TODAY

	LOCATION	BID ITEM NUMBER	DESCRIPTION OF WORK PERFORMED
1.	**Hill (Sheet D-13)**		**Sheet D-5 and D-13 start at Dahn's and alley station 1+00 End 1+50 - no bedding being used in this area**
2.	**Corrals (Sheet D-10)**		**Start 5+80 End 6+60 - rocky area, using bedding in this area**
3.	**Andre Meter Pits**		**Installed meter pits near fire hall and Dahn's and Rosie's intersection**
4.	**Tank**		**Excavation Completed. Subgrade compacted. Prepping to lay pipe under tank.**
5.	**Well House**		**None – Masonry contractors didn't come today.**
6.			

REASON FOR NO WORK:

INFORMATION ON PROGRESS OF WORK – (Causes for delays, extent of delays, Plant, materials, etc.)

MATERIALS DELIVERED TO SITE

	DESCRIPTION
1.	
2.	
3.	

NOTE

INSPECTIONS AND TEST (Include comment pertaining to contractors activities)

	TESTS	RESULTS		COMMENT
1.	**NCI Density testing**			
2.				

SAMPLES COLLECTED

	SAMPLE TYPE	SAMPLE ID	COMMENTS
1.			
2.			
3.			

CONSTRUCTION DAILY ACTIVITY REPORT

VERBAL INSTRUCTIONS GIVEN TO CONTRACTOR

	NAMES	INSTRUCTION	REACTION	REMARKS
1.				
2.				
3.				
4.				

NOTES –

DESIGN MODIFICATIONS

	DESCRIPTION OF MODIFICATION	REASON	ENGINEER APPROVAL?
1.			
2.			

VISITORS

	TIME	NAME	REPRESENTING	REMARKS
1.				
2.				
3.				
4.				
5.				

NOTES

- **Weekly meeting with DEQ, Boland, NCI, and Water District. See meeting notes.**
- **Didn't find gas tanks, keep alignment as is on Miners Lane (Sheet D-11). Will hit drain field at about station 1+50 (Sheet D-14).**

REMARKS – (Include controversial matters, information, instructions, disagreements, or any other miscellaneous remarks):

OVERSIGHT SIGNATURE	DATE	PROJECT MANAGER INITIALS	DATE

CONSTRUCTION DAILY ACTIVITY REPORT

TO: Montana Department of Environmental Quality Remediation Division - Mine Waste Cleanup Bureau Helena, MT Attn: Tom Henderson	REPORT NUMBER **#26**
PROJECT: Sand Coulee, water system replacement	DATE **Tuesday, 9-23-2014**
CONTRACTOR: Boland Construction Great Falls, MT	DEQ CONTRACT NUMBER
HAS ANYTHING DEVELOPED ON THE WORK WHICH MIGHT LEAD TO A CHANGE ORDER OR FINDING OF FACT? ☐ NO ☐ YES	WEATHER **Sunny**
HEALTH AND SAFETY Was a Job Safety Meeting held this date? ☐ NO ☐ YES	TEMPERATURE MINIMUM **65** MAXIMUM **80**

NUMBER OF CONTRACTOR'S EMPLOYEES

SUPERVISORY	OPERATORS	LABORERS	TOTAL
Steve C.	**6**	**7**	**14**

24 HOUR PRECIPITATION: **0**

SUBCONTRACTORS ON SITE

COMPANY NAME	TOTAL EMPLOYEES
1. **Andre Construction – Meter Pits**	**3**

List the major items of equipment

	units	EQUIPMENT DESCRIPTION	Hours	Comments	
1.	**5**	**Excavators**			
2.	**2**	**Frontend loaders**			
3.	**1**	**Skidsteer**			
4.	**2**	**Soft Dig Vacuum**			
5.	**1**	**Forklift**			
6.					
7.					

Notes:

CONSTRUCTION DAILY ACTIVITY REPORT

WORK PERFORMED TODAY

	LOCATION	BID ITEM NUMBER	DESCRIPTION OF WORK PERFORMED
1.	**Hill (Sheet D-13)**		**Start Station 1+50. End Station 3+00 (at 90 degree bend)**
2.	**Corrals (Sheet D-10)**		**Start 6+60. Broke main while recompacting. Repaired. End 8+20.**
3.	**Andre Meter Pits**		**Andre Excavation meter pits at Miners and Dade Lane intersection near house #75.**
4.	**Tank**		**Laid drain pipe, distribution pipe, and inlet pipe under tank. When excavating to lay pipe hitting very hard rock, had to break up with jack hammer. Laid bedding around pipe. Concrete truck will be there about 4:00 to put concrete around bends.**
5.	**Well House**		**None**
6.	**2 soft dig vacs**		**Both exploratory payable. Looking for main below tank.**

REASON FOR NO WORK:

INFORMATION ON PROGRESS OF WORK – (Causes for delays, extent of delays, Plant, materials, etc.)

MATERIALS DELIVERED TO SITE

	DESCRIPTION
1.	
2.	
3.	

NOTE

INSPECTIONS AND TEST (Include comment pertaining to contractors activities)

	TESTS	RESULTS		COMMENT
1.				
2.				

SAMPLES COLLECTED

	SAMPLE TYPE	SAMPLE ID	COMMENTS
1.			
2.			
3.			

CONSTRUCTION DAILY ACTIVITY REPORT

VERBAL INSTRUCTIONS GIVEN TO CONTRACTOR

	NAMES	INSTRUCTION	REACTION	REMARKS
1.				
2.				
3.				
4.				

NOTES –

DESIGN MODIFICATIONS

	DESCRIPTION OF MODIFICATION	REASON	ENGINEER APPROVAL?
1.			
2.			

VISITORS

	TIME	NAME	REPRESENTING	REMARKS
1.				
2.				
3.				
4.				
5.				

NOTES

- **Received confirmation tanks were removed and Miners Mercantile issued a "no further corrective action" letter 8/6/98.**
- **Design alignment of new 8"main coming from the tank down the hill is directly over existing main. We need to decide on location for new alignment.**

REMARKS – (Include controversial matters, information, instructions, disagreements, or any other miscellaneous remarks):

OVERSIGHT SIGNATURE	DATE	PROJECT MANAGER INITIALS	DATE

CONSTRUCTION DAILY ACTIVITY REPORT

TO: Montana Department of Environmental Quality Remediation Division - Mine Waste Cleanup Bureau Helena, MT Attn: Tom Henderson	REPORT NUMBER **#27**
PROJECT: Sand Coulee, water system replacement	DATE **Wednesday, 9-24-2014**
CONTRACTOR: Boland Construction Great Falls, MT	DEQ CONTRACT NUMBER
HAS ANYTHING DEVELOPED ON THE WORK WHICH MIGHT LEAD TO A CHANGE ORDER OR FINDING OF FACT? ☐ NO ☐ YES	WEATHER **Sunny**
HEALTH AND SAFETY Was a Job Safety Meeting held this date? ☐ NO ☐ YES	TEMPERATURE MINIMUM **65** MAXIMUM **80**

NUMBER OF CONTRACTOR'S EMPLOYEES				24 HOUR PRECIPITATION
SUPERVISORY	OPERATORS	LABORERS	TOTAL	**0**
Steve C.	**6**	**7**	**14**	

SUBCONTRACTORS ON SITE	
COMPANY NAME	TOTAL EMPLOYEES
1. **Andre Construction – Meter Pits**	**3**

List the major items of equipment

	units	EQUIPMENT DESCRIPTION	Hours	Comments	
1.	**5**	**Excavators**			
2.	**2**	**Frontend loaders**			
3.	**1**	**Skidsteer**			
4.	**2**	**Soft Dig Vacuum**			
5.	**1**	**Forklift**			
6.					
7.					

Notes:

CONSTRUCTION DAILY ACTIVITY REPORT

WORK PERFORMED TODAY

	LOCATION	BID ITEM NUMBER	DESCRIPTION OF WORK PERFORMED
1.	**Miners Lane(Sheet D-13)**		**Start Station 3+00. End Station 4+50. Had to excavate around a lot of fiber.**
2.	**Dusko Alley/West Alley (Sheets D-10 and D-11)**		**Start 8+20. End 9+00.**
3.	**Tank**		**Inlet, outlet and drain pipe are installed. Backfilling and compacting 6" lifts of pit run to foundation elevation. Have compacted 2nd lift.**
4.	**Well House**		**None.**
5.	**2 soft dig vacs**		**Both exploratory payable – looking for main below water tank and on Miners Lane (Sheet D-13) near station 4+00 fiber cables were not where marked.**
6.			

REASON FOR NO WORK:

INFORMATION ON PROGRESS OF WORK – (Causes for delays, extent of delays, Plant, materials, etc.)

MATERIALS DELIVERED TO SITE

	DESCRIPTION
1.	
2.	
3.	

NOTE

INSPECTIONS AND TEST (Include comment pertaining to contractors activities)

	TESTS	RESULTS		COMMENT
1.	**NCI Density Testing**	**Passing**		**Storage tank lifts to reach foundation grade ele.**
2.				

SAMPLES COLLECTED

	SAMPLE TYPE	SAMPLE ID	COMMENTS
1.			

2.			
3.			

VERBAL INSTRUCTIONS GIVEN TO CONTRACTOR

	NAMES	INSTRUCTION	REACTION	REMARKS
1.				
2.				
3.				
4.				

NOTES –

DESIGN MODIFICATIONS

	DESCRIPTION OF MODIFICATION	REASON	ENGINEER APPROVAL?
1.			
2.			

VISITORS

	TIME	NAME	REPRESENTING	REMARKS
1.				
2.				
3.				
4.				
5.				

NOTES

- **Placing 6″ lifts of pit run to reach foundation grade for water tank. Density tests performed on 1st lift passed. One passed after recompaction.**
- **Need existing main (found in spot locations through exploratory vacs) surveyed possibly Friday or Saturday so we can alter design alignment as necessary.**
- **Water line broke next to South Coulee Bar (just SE of bar). Dug up and capped.**

REMARKS – (Include controversial matters, information, instructions, disagreements, or any other miscellaneous remarks):

OVERSIGHT SIGNATURE	DATE	PROJECT MANAGER INITIALS	DATE

CONSTRUCTION DAILY ACTIVITY REPORT

TO: Montana Department of Environmental Quality Remediation Division - Mine Waste Cleanup Bureau Helena, MT Attn: Tom Henderson	REPORT NUMBER **#27**
PROJECT: Sand Coulee, water system replacement	DATE **Thursday, 9-25-2014**
CONTRACTOR: Boland Construction Great Falls, MT	DEQ CONTRACT NUMBER
HAS ANYTHING DEVELOPED ON THE WORK WHICH MIGHT LEAD TO A CHANGE ORDER OR FINDING OF FACT? ☐ NO ☐ YES	WEATHER **Sunny**
HEALTH AND SAFETY Was a Job Safety Meeting held this date? ☐ NO ☐ YES	TEMPERATURE MINIMUM **65** MAXIMUM **85**

NUMBER OF CONTRACTOR'S EMPLOYEES				24 HOUR PRECIPITATION
SUPERVISORY	OPERATORS	LABORERS	TOTAL	**0**
Steve C.	**6**	**7**	**14**	

SUBCONTRACTORS ON SITE		
	COMPANY NAME	TOTAL EMPLOYEES
1.	**Andre Construction – Meter Pits**	**3**

List the major items of equipment

	units	EQUIPMENT DESCRIPTION	Hours	Comments	
1.	**5**	**Excavators**			
2.	**2**	**Frontend loaders**			
3.	**1**	**Skidsteer**			
4.	**2**	**Soft Dig Vacuum**			
5.	**1**	**Forklift**			
6.		**Concrete Mixers**			
7.					

Notes:

CONSTRUCTION DAILY ACTIVITY REPORT

WORK PERFORMED TODAY

	LOCATION	BID ITEM NUMBER	DESCRIPTION OF WORK PERFORMED
1.	**Miners Lane(Sheet D-13)**		**Start Station 4+50. Turning into horizontal borehole at 5+47.**
2.	**Dusko Alley/West Alley (Sheets D-10 and D-11)**		**Start 9+00. Installed FH at 9+12. End 9+12.**
3.	**Tank**		**Backfill and compacted to foundation grade.**
4.	**Well House**		**None.**
5.	**2 soft dig vacs**		**One exploratory payable.** **One vac looking for 6" ACP – found in 3 places so far** **Found filling station and following pipe feeding from filling station to lead to 6" ACP. Other vac looking for 6" PVC - found 6" valve and one bend, looking for second bend.**

REASON FOR NO WORK:

INFORMATION ON PROGRESS OF WORK – (Causes for delays, extent of delays, Plant, materials, etc.)

MATERIALS DELIVERED TO SITE

	DESCRIPTION
1.	
2.	
3.	

NOTE

INSPECTIONS AND TEST (Include comment pertaining to contractors activities)

	TESTS	RESULTS		COMMENT
1.	**NCI Density Testing**	**Passing**		**Storage tank lifts to reach foundation grade ele.**
2.				

SAMPLES COLLECTED

	SAMPLE TYPE	SAMPLE ID	COMMENTS
1.			
2.			
3.			

CONSTRUCTION DAILY ACTIVITY REPORT

VERBAL INSTRUCTIONS GIVEN TO CONTRACTOR

	NAMES	INSTRUCTION	REACTION	REMARKS
1.				
2.				
3.				
4.				

NOTES –

DESIGN MODIFICATIONS

	DESCRIPTION OF MODIFICATION	REASON	ENGINEER APPROVAL?
1.			
2.			

VISITORS

	TIME	NAME	REPRESENTING	REMARKS
1.				
2.				
3.				
4.				
5.				

NOTES

- **Placing 6" lifts of pit run to reach foundation grade for water tank. Density tests performed passed.**
- **Suggested to Barry to at least air test lines under tank.**
- **Allow fire hydrant (at 9+12) to be moved to west (2') away from building in alley way. Also, we could move hydrant away from East Hunter, closer to building. 3+11 use 45° bend.**
- **Told Steve to get exploratory payment he needed to have two people operate the vac truck equipment.**
- **Tom wanted us to save a 5 gallon bucket of black "coal".**

REMARKS – (Include controversial matters, information, instructions, disagreements, or any other miscellaneous remarks):

OVERSIGHT SIGNATURE	DATE	PROJECT MANAGER INITIALS	DATE

CONSTRUCTION DAILY ACTIVITY REPORT

TO: Montana Department of Environmental Quality Remediation Division - Mine Waste Cleanup Bureau Helena, MT Attn: Tom Henderson	REPORT NUMBER **#29**
PROJECT: Sand Coulee, water system replacement	DATE **Friday, 9-26-2014**
CONTRACTOR: Boland Construction Great Falls, MT	DEQ CONTRACT NUMBER
HAS ANYTHING DEVELOPED ON THE WORK WHICH MIGHT LEAD TO A CHANGE ORDER OR FINDING OF FACT? ☐ NO ☐ YES	WEATHER **Partly cloudy, light showers**
HEALTH AND SAFETY Was a Job Safety Meeting held this date? ☐ NO ☐ YES	TEMPERATURE MINIMUM **65** MAXIMUM **75**

NUMBER OF CONTRACTOR'S EMPLOYEES				24 HOUR PRECIPITATION
SUPERVISORY	OPERATORS	LABORERS	TOTAL	**0**
Steve C.	**6**	**7**	**14**	

SUBCONTRACTORS ON SITE

COMPANY NAME	TOTAL EMPLOYEES
1. **Andre Construction – Meter Pits**	**3**

List the major items of equipment

	units	EQUIPMENT DESCRIPTION	Hours	Comments	
1.	**5**	**Excavators**			
2.	**2**	**Frontend loaders**			
3.	**1**	**Skidsteer**			
4.	**2**	**Soft Dig Vacuum**			
5.	**1**	**Forklift**			
6.		**Concrete Mixers**			
7.					

Notes:

CONSTRUCTION DAILY ACTIVITY REPORT

WORK PERFORMED TODAY

	LOCATION	BID ITEM NUMBER	DESCRIPTION OF WORK PERFORMED
1.	**Miners Lane(Sheet D-13)**		**Backfilling and compacting Station 4+50 to 5+00. Prepping for pipe through alleyway Sta. 6+80 to 7+90. Exploratory for fiber at Sta. 7+50. Clearing tree branches in pathway. Installing air release manhole at Sta. 3+00 (D-13). Began tieing into horizontal boring.**
2.	**West Alley/ Miners Lane Connectors Sheets D-11 and D-14)**		**Backfilling and compacting sta. 8+90 to 9+12. Compacting around fire hydrant near Dusko's. Started excavating and laying pipe Sta. 0+00 to 1+00.**
3.	**Tank**		**Placed and compacted 3" layer of leveling material around footing perimeter.**
4.	**Andre Meter Pits**		**Andre Excavation meter pits on Miners Lane House 70 and 85.**
5.	**2 soft dig vacs**		**@ bottom of tank hill searching for 6" PVC main and 6" ACP main. @ Miners Lane (D-13) Sta. 7+50 looking for fiber.**

REASON FOR NO WORK:

INFORMATION ON PROGRESS OF WORK – (Causes for delays, extent of delays, Plant, materials, etc.)

MATERIALS DELIVERED TO SITE

	DESCRIPTION
1.	
2.	
3.	

NOTE

INSPECTIONS AND TEST (Include comment pertaining to contractors activities)

	TESTS	RESULTS		COMMENT
1.	**NCI Density Testing**			
2.				

SAMPLES COLLECTED

	SAMPLE TYPE	SAMPLE ID	COMMENTS
1.			

2.			
3.			

VERBAL INSTRUCTIONS GIVEN TO CONTRACTOR

	NAMES	INSTRUCTION	REACTION	REMARKS
1.				
2.				
3.				
4.				

NOTES –

DESIGN MODIFICATIONS

	DESCRIPTION OF MODIFICATION	REASON	ENGINEER APPROVAL?
1.			
2.			

VISITORS

	TIME	NAME	REPRESENTING	REMARKS
1.				
2.				
3.				
4.				
5.				

NOTES

- **David N. surveyed locations of pipe below tank.**
- **Moved meter pits at house 75 and 85. (Kent wanted his relocated.)**
- **Didn't use coupler to connect to horizontal boring – regular fitting.**

REMARKS – (Include controversial matters, information, instructions, disagreements, or any other miscellaneous remarks):

OVERSIGHT SIGNATURE	DATE	PROJECT MANAGER INITIALS	DATE

CONSTRUCTION DAILY ACTIVITY REPORT

TO: Montana Department of Environmental Quality Remediation Division - Mine Waste Cleanup Bureau Helena, MT Attn: Tom Henderson	REPORT NUMBER **#30**
PROJECT: Sand Coulee, water system replacement	DATE **Monday, 9-29-2014**
CONTRACTOR: Boland Construction Great Falls, MT	DEQ CONTRACT NUMBER
HAS ANYTHING DEVELOPED ON THE WORK WHICH MIGHT LEAD TO A CHANGE ORDER OR FINDING OF FACT? ☐ NO ☐ YES	WEATHER **Partly cloudy**
HEALTH AND SAFETY Was a Job Safety Meeting held this date? ☐ NO ☐ YES	TEMPERATURE MINIMUM **50** MAXIMUM **70**

NUMBER OF CONTRACTOR'S EMPLOYEES				24 HOUR PRECIPITATION
SUPERVISORY	OPERATORS	LABORERS	TOTAL	**0**
Steve C.	**6**	**7**	**14**	

SUBCONTRACTORS ON SITE

COMPANY NAME	TOTAL EMPLOYEES
1. **Andre Construction – Meter Pits**	**3**

List the major items of equipment

	units	EQUIPMENT DESCRIPTION	Hours	Comments	
1.	**5**	**Excavators**			
2.	**2**	**Frontend loaders**			
3.	**1**	**Skidsteer**			
4.	**2**	**Soft Dig Vacuum**			
5.	**1**	**Forklift**			
6.		**Concrete Mixers**			
7.					

Notes:

CONSTRUCTION DAILY ACTIVITY REPORT

WORK PERFORMED TODAY

	LOCATION	BID ITEM NUMBER	DESCRIPTION OF WORK PERFORMED
1.	**Miners Lane(Sheet D-13)**		**Sta. 6+80 to 7+70. Hitting rock at about 4-5 feet bgs.**
2.	**Miners Lane Connectors (Sheet D-14)**		**Sta. 1+00 to 2+50.**
3.	**Tank**		**Installing manhole and drain pipe.**
4.	**Andre Meter Pits**		**Andre Excavation meter pits at house #150.**
5.	**2 soft dig vacs**		**@ SE side of post office – looking for water service.** **@ Miners Lane Sta. 7+40 looking for fiber and Sta. 7+90 looking for water service.**

REASON FOR NO WORK:

INFORMATION ON PROGRESS OF WORK – (Causes for delays, extent of delays, Plant, materials, etc.)

MATERIALS DELIVERED TO SITE

	DESCRIPTION
1.	
2.	
3.	

NOTE

INSPECTIONS AND TEST (Include comment pertaining to contractors activities)

	TESTS	RESULTS		COMMENT
1.	**NCI Density Testing**			
2.				

SAMPLES COLLECTED

	SAMPLE TYPE	SAMPLE ID	COMMENTS
1.			
2.			
3.			

VERBAL INSTRUCTIONS GIVEN TO CONTRACTOR

CONSTRUCTION DAILY ACTIVITY REPORT

	NAMES	INSTRUCTION	REACTION	REMARKS
1.				
2.				
3.				
4.				

NOTES –

DESIGN MODIFICATIONS

	DESCRIPTION OF MODIFICATION	REASON	ENGINEER APPROVAL?
1.			
2.			

VISITORS

	TIME	NAME	REPRESENTING	REMARKS
1.				
2.				
3.				
4.				
5.				

NOTES

- **Weekly meeting with Boland, NCI, District, DEQ, and Hydrometrics.**
- **Need submittal for temporary water from Boland.**
- **Hitting rock at 4 feet below ground surface at Sta. 7+00 (D-13) on Miners Lane.**
- **CMP at Sta. 2+50 (D-14) completely filled with soil.**

REMARKS – (Include controversial matters, information, instructions, disagreements, or any other miscellaneous remarks):

OVERSIGHT SIGNATURE	DATE	PROJECT MANAGER INITIALS	DATE

CONSTRUCTION DAILY ACTIVITY REPORT

TO: Montana Department of Environmental Quality Remediation Division - Mine Waste Cleanup Bureau Helena, MT Attn: Tom Henderson	REPORT NUMBER **#31**
PROJECT: Sand Coulee, water system replacement	DATE **Tuesday, 9-31-2014**
CONTRACTOR: Boland Construction Great Falls, MT	DEQ CONTRACT NUMBER
HAS ANYTHING DEVELOPED ON THE WORK WHICH MIGHT LEAD TO A CHANGE ORDER OR FINDING OF FACT? ☐ NO ☐ YES	WEATHER **cloudy, cool**
HEALTH AND SAFETY Was a Job Safety Meeting held this date? ☐ NO ☐ YES	TEMPERATURE MINIMUM **50** MAXIMUM **55**

NUMBER OF CONTRACTOR'S EMPLOYEES				24 HOUR PRECIPITATION
SUPERVISORY	OPERATORS	LABORERS	TOTAL	**0**
Steve C.	**6**	**7**	**14**	

SUBCONTRACTORS ON SITE

COMPANY NAME	TOTAL EMPLOYEES
1. **Andre Construction – Meter Pits**	**3**

List the major items of equipment

	units	EQUIPMENT DESCRIPTION	Hours	Comments	
1.	**5**	**Excavators**			
2.	**2**	**Frontend loaders**			
3.	**1**	**Skidsteer**			
4.	**2**	**Soft Dig Vacuum**			
5.	**1**	**Forklift**			
6.		**Concrete Mixers**			
7.					

Notes:

CONSTRUCTION DAILY ACTIVITY REPORT

WORK PERFORMED TODAY

	LOCATION	BID ITEM NUMBER	DESCRIPTION OF WORK PERFORMED
1.	**Miners Lane (Sheet D-13)**		**Sta. 7+70 to 7+90. Backfilling and compacting to 90 degree bend. Installed fire hydrant.**
2.	**Miners Lane Connectors (Sheet D-14)**		**Station 2+50 to 2+75. Backfilling and compacting to 2+75. Repaired CMP. Started down West Alley (D-11) Station 10+00.**
3.	**Tank**		**Installing more drain pipe.**
4.	**Andre Meter Pits**		**Andre Excavation meter pits – 3 pits in front of house 150.**
5.	**2 soft dig vacs**		**@ east side of post office locating water service down West Alley (D-11) Station 10+50 to 11+00.** **@ Miners lane Station 8+90. Located stormwater drainpipe and existing 4" main next to drain pipe. Drain pipe has 45 degree vertical bend under stormwater drain pipe. Moving alignment 2-3 feet NE to avoid disturbing thrust block and damaging pipe. Soft vac looking for 4" main NE of found location to determine where it bends again and verify safe crossing location.**

REASON FOR NO WORK:

INFORMATION ON PROGRESS OF WORK – (Causes for delays, extent of delays, Plant, materials, etc.)

MATERIALS DELIVERED TO SITE

	DESCRIPTION
1.	
2.	
3.	

NOTE

INSPECTIONS AND TEST (Include comment pertaining to contractors activities)

	TESTS	RESULTS		COMMENT
1.	**NCI Density Testing**			
2.				

SAMPLES COLLECTED

	SAMPLE TYPE	SAMPLE ID	COMMENTS
1.			
2.			

3.			

VERBAL INSTRUCTIONS GIVEN TO CONTRACTOR

	NAMES	INSTRUCTION	REACTION	REMARKS
1.				
2.				
3.				
4.				

NOTES –

DESIGN MODIFICATIONS

	DESCRIPTION OF MODIFICATION	REASON	ENGINEER APPROVAL?
1.			
2.			

VISITORS

	TIME	NAME	REPRESENTING	REMARKS
1.				
2.				
3.				
4.				
5.				

NOTES

- **Repaired culvert at Station 2+50 (D-14).**
- **Need easement for Theodore Morocco's meter pit? Also will his service line have to go through Griffin property?**

REMARKS – (Include controversial matters, information, instructions, disagreements, or any other miscellaneous remarks):

OVERSIGHT SIGNATURE	DATE	PROJECT MANAGER INITIALS	DATE

CONSTRUCTION DAILY ACTIVITY REPORT

TO: Montana Department of Environmental Quality Remediation Division - Mine Waste Cleanup Bureau Helena, MT Attn: Tom Henderson	REPORT NUMBER **#32**
PROJECT: Sand Coulee, water system replacement	DATE **Wednesday, 10-1-2014**
CONTRACTOR: Boland Construction Great Falls, MT	DEQ CONTRACT NUMBER
HAS ANYTHING DEVELOPED ON THE WORK WHICH MIGHT LEAD TO A CHANGE ORDER OR FINDING OF FACT? ☐ NO ☐ YES	WEATHER **Sunny**
HEALTH AND SAFETY Was a Job Safety Meeting held this date? ☐ NO ☐ YES	TEMPERATURE MINIMUM **60** MAXIMUM **75**

NUMBER OF CONTRACTOR'S EMPLOYEES				24 HOUR PRECIPITATION
SUPERVISORY	OPERATORS	LABORERS	TOTAL	**0**
Steve C.	**6**	**7**	**14**	

SUBCONTRACTORS ON SITE		
	COMPANY NAME	TOTAL EMPLOYEES
1.	**Andre Construction – Meter Pits**	**3**

List the major items of equipment

	units	EQUIPMENT DESCRIPTION	Hours	Comments	
1.	**5**	**Excavators/ (2 Roller Compaction Buckets)**			
2.	**2**	**Frontend loaders**			
3.	**1**	**Skidsteer**			
4.	**2**	**Soft Dig Vacuum**			
5.	**1**	**Forklift**			
6.		**Concrete Mixers**			
7.					

Notes:

CONSTRUCTION DAILY ACTIVITY REPORT

WORK PERFORMED TODAY

	LOCATION	BID ITEM NUMBER	DESCRIPTION OF WORK PERFORMED
1.	**Miners Lane Connectors (Sheet D-14)**		**Station 7+90 to 8+40. Removed stormwater drain pipe. Placed new main where drain pipe had been. Crossed over 4" main near Station 8+90. Will cross again going down Fortune near Station 33+30.**
2.	**West Alley (Sheet D-11)**		**Station 10+00 to 11+20. Some time spent locating and excavating around existing main and service lines down West Alley. Steve wanted to get far enough down West Alley to clean up road near Post Office and allow traffic through.**
3.	**Tank**		**Setting forms, pour Tuesday. Placing drain pipe.**
4.	**Andre Meter Pits**		**2 meter pits installed.**
5.	**2 soft dig vacs**		**@ West Alley (D-11) Station 11+50 to 13+00 locating main and service lines.** **@ Fortune Lane (D-6) Station 33+30 looking for water main.**

REASON FOR NO WORK:

INFORMATION ON PROGRESS OF WORK – (Causes for delays, extent of delays, Plant, materials, etc.)

MATERIALS DELIVERED TO SITE

	DESCRIPTION
1.	
2.	
3.	

NOTE

INSPECTIONS AND TEST (Include comment pertaining to contractors activities)

	TESTS	RESULTS		COMMENT
1.	**NCI Density Testing**			
2.				

SAMPLES COLLECTED

	SAMPLE TYPE	SAMPLE ID	COMMENTS
1.			
2.			

3.			

VERBAL INSTRUCTIONS GIVEN TO CONTRACTOR

	NAMES	INSTRUCTION	REACTION	REMARKS
1.				
2.				
3.				
4.				

NOTES –

DESIGN MODIFICATIONS

	DESCRIPTION OF MODIFICATION	REASON	ENGINEER APPROVAL?
1.			
2.			

VISITORS

	TIME	NAME	REPRESENTING	REMARKS
1.				
2.				
3.				
4.				
5.				

NOTES

- **Meeting at 1:30 with Ralph, Idaho, Brad, Krista, Barry, and Steve. Discussed density testing results. Idaho will follow up with Barry on proceeding with density testing.**
- **We looked at realignment of pipe below water tank. Agreed on general relocation which is about 10′ NE of design alignment down tank hill to avoid being on top of 6″ ACP, then 45 degree bend near station 9+00 (± 50′) crossing 6″ ACP in 2 locations to tie into directional drill and existing main. Exact location of tie-in to direction drill and existing main will be field fit.**
- **Both locations using pipe bedding.**

REMARKS – (Include controversial matters, information, instructions, disagreements, or any other miscellaneous remarks):

OVERSIGHT SIGNATURE	DATE	PROJECT MANAGER INITIALS	DATE

CONSTRUCTION DAILY ACTIVITY REPORT

TO: Montana Department of Environmental Quality Remediation Division - Mine Waste Cleanup Bureau Helena, MT Attn: Tom Henderson	REPORT NUMBER **#33**
PROJECT: Sand Coulee, water system replacement	DATE **Thursday, 10-2-2014**
CONTRACTOR: Boland Construction Great Falls, MT	DEQ CONTRACT NUMBER
HAS ANYTHING DEVELOPED ON THE WORK WHICH MIGHT LEAD TO A CHANGE ORDER OR FINDING OF FACT? ☐ NO ☐ YES	WEATHER **snowing**
HEALTH AND SAFETY Was a Job Safety Meeting held this date? ☐ NO ☐ YES	TEMPERATURE MINIMUM **35** MAXIMUM **45**

NUMBER OF CONTRACTOR'S EMPLOYEES				24 HOUR PRECIPITATION
SUPERVISORY	OPERATORS	LABORERS	TOTAL	**0**
Steve C.	**6**	**7**	**14**	

SUBCONTRACTORS ON SITE

COMPANY NAME	TOTAL EMPLOYEES
1. **Andre Construction – Meter Pits**	**3**

List the major items of equipment

	units	EQUIPMENT DESCRIPTION	Hours	Comments	
1.	**5**	**Excavators/ (2 Roller Compaction Buckets)**			
2.	**2**	**Frontend loaders**			
3.	**1**	**Skidsteer**			
4.	**2**	**Soft Dig Vacuum**			
5.	**1**	**Forklift**			
6.		**Concrete Mixers**			
7.					

Notes:

CONSTRUCTION DAILY ACTIVITY REPORT

WORK PERFORMED TODAY

	LOCATION	BID ITEM NUMBER	DESCRIPTION OF WORK PERFORMED
1.	**Miners Lane Connectors (Sheet D-14)**		**Station 8+40 to 8+98.**
2.	**West Alley (Sheet D-11)**		**Station 11+20 to 12+35.**
3.	**Tank**		**Placing rebar and forms (have placed footing tie bars and 8 rings of circumferential footing rebar). Finished placing drain pipe. Friday – will construct splash pad.**
4.	**Andre Meter Pits**		**1 meter pit installed by Post Office.**
5.	**2 soft dig vacs**		**@ West Alley (D-11) Station 12+70 looking for service line.** **@ Fortune Lane (D-6) Station 33+30 looking for water main.**

- REASON FOR NO WORK: **Worked until 12:00. Shut down this afternoon due to weather.**

INFORMATION ON PROGRESS OF WORK – (Causes for delays, extent of delays, Plant, materials, etc.)

MATERIALS DELIVERED TO SITE

	DESCRIPTION
1.	
2.	
3.	

NOTE

INSPECTIONS AND TEST (Include comment pertaining to contractors activities)

	TESTS	RESULTS		COMMENT
1.	**NCI Density Testing**			
2.				

SAMPLES COLLECTED

	SAMPLE TYPE	SAMPLE ID	COMMENTS
1.			
2.			

3.			

VERBAL INSTRUCTIONS GIVEN TO CONTRACTOR

	NAMES	INSTRUCTION	REACTION	REMARKS
1.				
2.				
3.				
4.				

NOTES –

DESIGN MODIFICATIONS

	DESCRIPTION OF MODIFICATION	REASON	ENGINEER APPROVAL?
1.			
2.			

VISITORS

	TIME	NAME	REPRESENTING	REMARKS
1.				
2.				
3.				
4.				
5.				

NOTES

- **Worked until 12:00. Shut down this afternoon due to weather.**
- **Friday or Monday - one crew will most likely start laying pipe under tank hill.**
- **Using pipe bedding in these locations.**

REMARKS – (Include controversial matters, information, instructions, disagreements, or any other miscellaneous remarks):

OVERSIGHT SIGNATURE	DATE	PROJECT MANAGER INITIALS	DATE

CONSTRUCTION DAILY ACTIVITY REPORT

TO: Montana Department of Environmental Quality Remediation Division - Mine Waste Cleanup Bureau Helena, MT Attn: Tom Henderson	REPORT NUMBER **#34**
PROJECT: Sand Coulee, water system replacement	DATE **Friday, 10-3-2014**
CONTRACTOR: Boland Construction Great Falls, MT	DEQ CONTRACT NUMBER
HAS ANYTHING DEVELOPED ON THE WORK WHICH MIGHT LEAD TO A CHANGE ORDER OR FINDING OF FACT? ☐ NO ☐ YES	WEATHER **Sunny**
HEALTH AND SAFETY Was a Job Safety Meeting held this date? ☐ NO ☐ YES	TEMPERATURE MINIMUM **65** MAXIMUM **75**

NUMBER OF CONTRACTOR'S EMPLOYEES				24 HOUR PRECIPITATION
SUPERVISORY	OPERATORS	LABORERS	TOTAL	**0**
Steve C.	**6**	**7**	**14**	

SUBCONTRACTORS ON SITE	
COMPANY NAME	TOTAL EMPLOYEES
1. **Andre Construction – Meter Pits**	**3**

List the major items of equipment

	units	EQUIPMENT DESCRIPTION	Hours	Comments	
1.	**5**	**Excavators**			
2.	**2**	**Frontend loaders**			
3.	**1**	**Skidsteer**			
4.	**2**	**Soft Dig Vacuum**			
5.	**1**	**Forklift**			
6.		**Concrete Mixers**			
7.					

Notes:

CONSTRUCTION DAILY ACTIVITY REPORT

WORK PERFORMED TODAY

	LOCATION	BID ITEM NUMBER	DESCRIPTION OF WORK PERFORMED
1.	**Miners Lane(Sheet D-13)**		**Station 8+98 to tie-in at Dahn's Lane and Miners Lane Intersection**
2.	**West Alley (Sheet D-11)**		**Backfilling and compacted to Station 12+35. Mob to below tank hill. Laid out pipe alignment and excavating around existing main where tie-in will occur.**
3.	**Tank**		**Dug out area for splash pad.**
4.	**Andre Meter Pits**		**Installed one meter pit West Alley Station 11+20.**
5.	**2 soft dig vacs**		**Defrosted frozen line in morning @ Fortune Lane Station 33+24 to 33+50 looking for water main (exploratory) @ West Alley (Station 12+25) looking for water service. Late afternoon moved to area below tank hill to excavate around existing main where tie-in will occur. (exploratory)**

REASON FOR NO WORK:

INFORMATION ON PROGRESS OF WORK – (Causes for delays, extent of delays, Plant, materials, etc.)

MATERIALS DELIVERED TO SITE

	DESCRIPTION
1.	
2.	
3.	

NOTE

INSPECTIONS AND TEST (Include comment pertaining to contractors activities)

	TESTS	RESULTS		COMMENT
1.	**NCI Density Testing**			
2.				

SAMPLES COLLECTED

	SAMPLE TYPE	SAMPLE ID	COMMENTS
1.			
2.			
3.			

VERBAL INSTRUCTIONS GIVEN TO CONTRACTOR

	NAMES	INSTRUCTION	REACTION	REMARKS
1.				
2.				
3.				
4.				

NOTES –

DESIGN MODIFICATIONS

	DESCRIPTION OF MODIFICATION	REASON	ENGINEER APPROVAL?
1.			
2.			

VISITORS

	TIME	NAME	REPRESENTING	REMARKS
1.				
2.				
3.				
4.				
5.				

NOTES

- **Ralph and David (NCI) visited. Looked at tank rebar for footing. 64 footing tie bars – should be 66.**
- **Ralph approved layout below tank hill. When existing main is no longer needed permanently cap off line connecting new to existing.**

REMARKS – (Include controversial matters, information, instructions, disagreements, or any other miscellaneous remarks):

OVERSIGHT SIGNATURE	DATE	PROJECT MANAGER INITIALS	DATE

CONSTRUCTION DAILY ACTIVITY REPORT

TO: Montana Department of Environmental Quality Remediation Division - Mine Waste Cleanup Bureau Helena, MT Attn: Tom Henderson	REPORT NUMBER **#35**
PROJECT: Sand Coulee, water system replacement	DATE **Monday, 10-6-2014**
CONTRACTOR: Boland Construction Great Falls, MT	DEQ CONTRACT NUMBER
HAS ANYTHING DEVELOPED ON THE WORK WHICH MIGHT LEAD TO A CHANGE ORDER OR FINDING OF FACT? ☐ NO ☐ YES	WEATHER **Sunny**
HEALTH AND SAFETY Was a Job Safety Meeting held this date? ☐ NO ☐ YES	TEMPERATURE MINIMUM **65** / MAXIMUM **75**

NUMBER OF CONTRACTOR'S EMPLOYEES				24 HOUR PRECIPITATION
SUPERVISORY	OPERATORS	LABORERS	TOTAL	**0**
Steve C.	**6**	**7**	**14**	

SUBCONTRACTORS ON SITE		
	COMPANY NAME	TOTAL EMPLOYEES
1.	**Andre Construction – Meter Pits (not here today)**	**3**

List the major items of equipment

	units	EQUIPMENT DESCRIPTION	Hours	Comments	
1.	**5**	**Excavators**			
2.	**2**	**Frontend loaders**			
3.	**1**	**Skidsteer**			
4.	**2**	**Soft Dig Vacuum**			
5.	**1**	**Forklift**			
6.		**Concrete Mixers**			
7.					

Notes:

CONSTRUCTION DAILY ACTIVITY REPORT

WORK PERFORMED TODAY

	LOCATION	BID ITEM NUMBER	DESCRIPTION OF WORK PERFORMED
1.	**Fortune Lane/ Central Dahn's Lane (Sheet D-6)**		**Marking out alignment, waiting for vac to locate main. Station 33+24 installed valve and test tap. Approved install of (2) 45 bends to cross main down Fortune Lane.**
2.	**Gulch Lane (Below tank hill - Sheet D-3)**		**Laying pipe at bottom of tank hill Station 7+00 to 8+50. Installed valve and tee.**
3.	**Tank**		**Set forms for splash pad.**
4.	**Andre Meter Pits**		**Not here today.**
5.	**2 soft dig vacs**		**@ Fortune Lane Station 33+20 to 33+50 locating water main. (payable) Found fiber at Fortune Lane where it crosses new main. (not payable – Steve to provide exact hours) @ below tank hill at tie-in area excavating around existing. (payable) Found fiber where it crosses new main (not payable - Steve to provide exact hours)**

REASON FOR NO WORK:

INFORMATION ON PROGRESS OF WORK – (Causes for delays, extent of delays, Plant, materials, etc.)

MATERIALS DELIVERED TO SITE

	DESCRIPTION
1.	
2.	
3.	

NOTE

INSPECTIONS AND TEST (Include comment pertaining to contractors activities)

	TESTS	RESULTS		COMMENT
1.	**NCI Density Testing**			
2.				

SAMPLES COLLECTED

	SAMPLE TYPE	SAMPLE ID	COMMENTS
1.			
2.			
3.			

CONSTRUCTION DAILY ACTIVITY REPORT

VERBAL INSTRUCTIONS GIVEN TO CONTRACTOR

	NAMES	INSTRUCTION	REACTION	REMARKS
1.				
2.				
3.				
4.				

NOTES –

DESIGN MODIFICATIONS

	DESCRIPTION OF MODIFICATION	REASON	ENGINEER APPROVAL?
1.			
2.			

VISITORS

	TIME	NAME	REPRESENTING	REMARKS
1.				
2.				
3.				
4.				
5.				

NOTES

- **Weekly meeting with NCI, Boland, District, and Hydrometrics. Tom H. (DEQ) not present today.**

REMARKS – (Include controversial matters, information, instructions, disagreements, or any other miscellaneous remarks):

OVERSIGHT SIGNATURE	DATE	PROJECT MANAGER INITIALS	DATE

CONSTRUCTION DAILY ACTIVITY REPORT

TO: Montana Department of Environmental Quality Remediation Division - Mine Waste Cleanup Bureau Helena, MT Attn: Tom Henderson	REPORT NUMBER **#36**
PROJECT: Sand Coulee, water system replacement	DATE **Tuesday, 10-7-2014**
CONTRACTOR: Boland Construction Great Falls, MT	DEQ CONTRACT NUMBER
HAS ANYTHING DEVELOPED ON THE WORK WHICH MIGHT LEAD TO A CHANGE ORDER OR FINDING OF FACT? ☐ NO ☐ YES	WEATHER **Sunny**
HEALTH AND SAFETY Was a Job Safety Meeting held this date? ☐ NO ☐ YES	TEMPERATURE MINIMUM **65** MAXIMUM **75**

NUMBER OF CONTRACTOR'S EMPLOYEES				24 HOUR PRECIPITATION
SUPERVISORY	OPERATORS	LABORERS	TOTAL	**0**
Steve C.	**6**	**7**	**14**	

SUBCONTRACTORS ON SITE		
	COMPANY NAME	TOTAL EMPLOYEES
1.	**Andre Construction – Meter Pits (not here today)**	**3**

List the major items of equipment

	units	EQUIPMENT DESCRIPTION	Hours	Comments	
1.	**5**	**Excavators**			
2.	**2**	**Frontend loaders**			
3.	**1**	**Skidsteer**			
4.	**2**	**Soft Dig Vacuum**			
5.	**1**	**Forklift**			
6.		**Concrete Mixers**			
7.					

Notes:

CONSTRUCTION DAILY ACTIVITY REPORT

WORK PERFORMED TODAY

	LOCATION	BID ITEM NUMBER	DESCRIPTION OF WORK PERFORMED
1.	**Fortune Lane/ Central Dahn's Lane (Sheet D-6)**		**Station 33+24 to 35+00.**
2.	**Gulch Lane (Below tank hill - Sheet D-3)**		**Station 8+50 to 9+50. Backfilling/compacting around GV box at Station 7+00.**
3.	**Tank**		**Poured footing. See notes below. Poured concrete for splash pad. Placed stones in concrete.**
4.	**Andre Meter Pits**		**Not here today.**
5.	**2 soft dig vacs**		**a.m. 1 vac @ West Alley Station 12+25. Didn't see other vac operating. p.m. 1 vac @ Fortune Lane locating water main (Station 35+00 to 36+50). 1 vac @ West Alley Station 12+25.**

REASON FOR NO WORK:

INFORMATION ON PROGRESS OF WORK – (Causes for delays, extent of delays, Plant, materials, etc.)

MATERIALS DELIVERED TO SITE

	DESCRIPTION
1.	**Dickman delivered pipe bedding.**
2.	
3.	

NOTE

INSPECTIONS AND TEST (Include comment pertaining to contractors activities)

	TESTS	RESULTS		COMMENT
1.	**NCI Density Testing**			
2.				

SAMPLES COLLECTED

	SAMPLE TYPE	SAMPLE ID	COMMENTS
1.			
2.			
3.			

VERBAL INSTRUCTIONS GIVEN TO CONTRACTOR

	NAMES	INSTRUCTION	REACTION	REMARKS
1.				
2.				
3.				
4.				

NOTES –

DESIGN MODIFICATIONS

	DESCRIPTION OF MODIFICATION	REASON	ENGINEER APPROVAL?
1.			
2.			

VISITORS

	TIME	NAME	REPRESENTING	REMARKS
1.				
2.				
3.				
4.				
5.				

NOTES

- **Began setting up temp water system down West Alley.**
- **Measured nominal foundation outside diameter at 32′ 3″ while Mike with Engineering America was present to double check tank would fit. This is what is specified on drawings. He also has 6″ of "play" with leveling plates.**
- **Tank – poured foundation footing with concrete pumping truck. 3 trucks of concrete delivered. Placed concrete in (3) 14″ lifts. Each lift was followed with stinger to remove air. TD&H performed slump tests on each truck and collected cylinders from the 1st truck. Mike from Engineering America placed foundation bolts and leveling plates. Placed concrete for splash pad.**
- **Barry said he would perform air pressure tests for tank piping.**
- **Barry asked if David N. could stake out new alignment down tank hill.**
- **Inside footing – backfill with pit run to 3″ below foundation. On top of pit run place 3″ - 1 ½ " base course.**

REMARKS – (Include controversial matters, information, instructions, disagreements, or any other miscellaneous remarks):

OVERSIGHT SIGNATURE	DATE	PROJECT MANAGER INITIALS	DATE

CONSTRUCTION DAILY ACTIVITY REPORT

TO: Montana Department of Environmental Quality Remediation Division - Mine Waste Cleanup Bureau Helena, MT Attn: Tom Henderson	REPORT NUMBER **#37**
PROJECT: Sand Coulee, water system replacement	DATE **Wednesday, 10-8-2014**
CONTRACTOR: Boland Construction Great Falls, MT	DEQ CONTRACT NUMBER
HAS ANYTHING DEVELOPED ON THE WORK WHICH MIGHT LEAD TO A CHANGE ORDER OR FINDING OF FACT? ☐ NO ☐ YES	WEATHER **Sunny**
HEALTH AND SAFETY Was a Job Safety Meeting held this date? ☐ NO ☐ YES	TEMPERATURE MINIMUM **65** MAXIMUM **75**

NUMBER OF CONTRACTOR'S EMPLOYEES				24 HOUR PRECIPITATION
SUPERVISORY	OPERATORS	LABORERS	TOTAL	**0**
Steve C.	**6**	**7**	**14**	

SUBCONTRACTORS ON SITE	
COMPANY NAME	TOTAL EMPLOYEES
1. **Andre Construction – Meter Pits**	**3**

List the major items of equipment

	units	EQUIPMENT DESCRIPTION	Hours	Comments	
1.	**5**	**Excavators**			
2.	**2**	**Frontend loaders**			
3.	**1**	**Skidsteer**			
4.	**2**	**Soft Dig Vacuum**			
5.	**1**	**Forklift**			
6.		**Concrete Mixers**			
7.					

Notes:

CONSTRUCTION DAILY ACTIVITY REPORT

WORK PERFORMED TODAY

	LOCATION	BID ITEM NUMBER	DESCRIPTION OF WORK PERFORMED
1.	**Fortune Lane/ Central Dahn's Lane (Sheet D-6)**		**Station 35+00 to 36+00. (2) 45 degree bends installed at approx. station 34+60 and 34+80. Interbedded coal and coal ash seams ranging from 2" to 2' in thickness throughout Fortune Lane.**
2.	**Gulch Lane (Below tank hill - Sheet D-3)**		**Installed tee and fire hydrant at approx. Station 9+35. Tie-ing into directional drill. Pumping water out of trench.**
3.	**West Alley**		**Setting up temporary water system down West Alley.**
4.	**Andre Meter Pits**		**Installed 2 meter pits.**
5.	**2 soft dig vacs**		**a.m. 1 vac @ West Alley Station 12+25. Located service line, moved off this location about 11:00. 1 vac looking for service to house 40 on Fortune Lane. Know where curb stop is but need to find service line where main will cross.** **p.m. 1 vac operating…found service to house 40 in one location. Looking in another location where new main crosses.**

REASON FOR NO WORK:

INFORMATION ON PROGRESS OF WORK – (Causes for delays, extent of delays, Plant, materials, etc.)

MATERIALS DELIVERED TO SITE

	DESCRIPTION
1.	
2.	
3.	

NOTE

INSPECTIONS AND TEST (Include comment pertaining to contractors activities)

	TESTS	RESULTS		COMMENT
1.	**NCI Density Testing**			
2.				

SAMPLES COLLECTED

	SAMPLE TYPE	SAMPLE ID	COMMENTS
1.			
2.			
3.			

CONSTRUCTION DAILY ACTIVITY REPORT

VERBAL INSTRUCTIONS GIVEN TO CONTRACTOR

	NAMES	INSTRUCTION	REACTION	REMARKS
1.				
2.				
3.				
4.				

NOTES –

DESIGN MODIFICATIONS

	DESCRIPTION OF MODIFICATION	REASON	ENGINEER APPROVAL?
1.			
2.			

VISITORS

	TIME	NAME	REPRESENTING	REMARKS
1.				
2.				
3.				
4.				
5.				

NOTES

- **Alec Forbes (Gulch Lane, House 65) says he never signed easement to go through his property.**
- **Masonry contractor arrived on site about 11:00 and began setting up scaffolding. They will lay blocks tomorrow. Approved moving South door 2″ East to avoid having to cut 2″ bricks on outside.**
- **No rebar at control joints and west door jamb – we will have them drill out holes and epoxy grout rebar at control joints and West door jamb.**
- **Steve is missing 3 valves. Quantity sheets and drawings have 22 valves? Not sure if quantity sheets include drain valve at tank.**

REMARKS – (Include controversial matters, information, instructions, disagreements, or any other miscellaneous remarks):

OVERSIGHT SIGNATURE	DATE	PROJECT MANAGER INITIALS	DATE

CONSTRUCTION DAILY ACTIVITY REPORT

TO: Montana Department of Environmental Quality Remediation Division - Mine Waste Cleanup Bureau Helena, MT Attn: Tom Henderson	REPORT NUMBER **#38**
PROJECT: Sand Coulee, water system replacement	DATE **Thursday, 10-9-2014**
CONTRACTOR: Boland Construction Great Falls, MT	DEQ CONTRACT NUMBER
HAS ANYTHING DEVELOPED ON THE WORK WHICH MIGHT LEAD TO A CHANGE ORDER OR FINDING OF FACT? ☐ NO ☐ YES	WEATHER **Sunny**
HEALTH AND SAFETY Was a Job Safety Meeting held this date? ☐ NO ☐ YES	TEMPERATURE MINIMUM **65** MAXIMUM **75**

NUMBER OF CONTRACTOR'S EMPLOYEES				24 HOUR PRECIPITATION
SUPERVISORY	OPERATORS	LABORERS	TOTAL	**0**
Steve C.	**6**	**7**	**14**	

SUBCONTRACTORS ON SITE	
COMPANY NAME	TOTAL EMPLOYEES
1. **Andre Construction – Meter Pits**	**3**

List the major items of equipment

	units	EQUIPMENT DESCRIPTION	Hours	Comments	
1.	**5**	**Excavators**			
2.	**2**	**Frontend loaders**			
3.	**1**	**Skidsteer**			
4.	**2**	**Soft Dig Vacuum**			
5.	**1**	**Forklift**			
6.		**Concrete Mixers**			
7.					

Notes:

CONSTRUCTION DAILY ACTIVITY REPORT

WORK PERFORMED TODAY

	LOCATION	BID ITEM NUMBER	DESCRIPTION OF WORK PERFORMED
1.	**Fortune Lane/ Central Dahn's Lane (Sheet D-6)**		**Station 36+00 to 36+70. Installed (2) 45 degree bends at 36+31 and 36+44.**
2.	**Gulch Lane (Below tank hill - Sheet D-3)**		**Tied into directional drill with 11 ¼ bend. Installed valve, test tap, and tee.**
3.	**West Alley**		**Continued setting up temporary water system down West Alley.**
4.	**Andre Meter Pits**		**Not here today.**
5.	**Well house**		**Setting up door frames. Drilled holes for #4 and #5 rebar that needed placed. Cleaned holes with air compressor and set rebar in with epoxy. Started placing block. Removing forms from tank footing.**

REASON FOR NO WORK:

INFORMATION ON PROGRESS OF WORK – (Causes for delays, extent of delays, Plant, materials, etc.)

MATERIALS DELIVERED TO SITE

	DESCRIPTION
1.	
2.	
3.	

NOTE

INSPECTIONS AND TEST (Include comment pertaining to contractors activities)

	TESTS	RESULTS		COMMENT
1.	**NCI Density Testing**			
2.				

SAMPLES COLLECTED

	SAMPLE TYPE	SAMPLE ID	COMMENTS
1.			
2.			
3.			

CONSTRUCTION DAILY ACTIVITY REPORT

VERBAL INSTRUCTIONS GIVEN TO CONTRACTOR

	NAMES	INSTRUCTION	REACTION	REMARKS
1.				
2.				
3.				
4.				

NOTES –

DESIGN MODIFICATIONS

	DESCRIPTION OF MODIFICATION	REASON	ENGINEER APPROVAL?
1.			
2.			

VISITORS

	TIME	NAME	REPRESENTING	REMARKS
1.				
2.				
3.				
4.				
5.				

NOTES

- **1 soft dig vac operating down West Alley.**
- **David N. (NCI) restaked alignment on tank hill and as-builts below tank hill.**
- **Mike (Andre meter pits) wasn't here today but I will find out from him how many meter pits are in/near driveways and were backfilled around the top with gravel.**

REMARKS – (Include controversial matters, information, instructions, disagreements, or any other miscellaneous remarks):

OVERSIGHT SIGNATURE	DATE	PROJECT MANAGER INITIALS	DATE

CONSTRUCTION DAILY ACTIVITY REPORT

TO: Montana Department of Environmental Quality Remediation Division - Mine Waste Cleanup Bureau Helena, MT Attn: Tom Henderson	REPORT NUMBER **#39**
PROJECT: Sand Coulee, water system replacement	DATE **Friday, 10-10-2014**
CONTRACTOR: Boland Construction Great Falls, MT	DEQ CONTRACT NUMBER
HAS ANYTHING DEVELOPED ON THE WORK WHICH MIGHT LEAD TO A CHANGE ORDER OR FINDING OF FACT? ☐ NO ☐ YES	WEATHER **Sunny**
HEALTH AND SAFETY Was a Job Safety Meeting held this date? ☐ NO ☐ YES	TEMPERATURE MINIMUM **65** MAXIMUM **75**

NUMBER OF CONTRACTOR'S EMPLOYEES				24 HOUR PRECIPITATION
SUPERVISORY	OPERATORS	LABORERS	TOTAL	**0**
Steve C.	**6**	**7**	**14**	

SUBCONTRACTORS ON SITE		
	COMPANY NAME	TOTAL EMPLOYEES
1.	**Andre Construction – Meter Pits**	**3**

List the major items of equipment

	units	EQUIPMENT DESCRIPTION	Hours	Comments	
1.	**5**	**Excavators**			
2.	**2**	**Frontend loaders**			
3.	**1**	**Skidsteer**			
4.	**2**	**Soft Dig Vacuum**			
5.	**1**	**Forklift**			
6.		**Concrete Mixers**			
7.					

Notes:

CONSTRUCTION DAILY ACTIVITY REPORT

WORK PERFORMED TODAY

	LOCATION	BID ITEM NUMBER	DESCRIPTION OF WORK PERFORMED
1.	**Fortune Lane/ Central Dahn's Lane (Sheet D-6)**		**Station 36+70 to 39+00. Installed 90 degree bend and fire hydrant.**
2.	**Gulch Lane (Below tank hill - Sheet D-3)**		**Tie-ing into existing main. Broke 6" existing water main. Pumping water out. Installed 6" valve onto existing main and 6" to 8" pipe fitting.**
3.	**Temp Water**		**Chlorinated temporary water system. Will let it sit over the weekend before flushing.**
4.	**Andre Meter Pits**		**Not here today.**
5.	**Well house**		**Placing block - 5 blocks high on all sides of wall.**

REASON FOR NO WORK:

INFORMATION ON PROGRESS OF WORK – (Causes for delays, extent of delays, Plant, materials, etc.)

MATERIALS DELIVERED TO SITE

	DESCRIPTION
1.	
2.	
3.	

NOTE

INSPECTIONS AND TEST (Include comment pertaining to contractors activities)

	TESTS	RESULTS		COMMENT
1.	**NCI Density Testing**			
2.				

SAMPLES COLLECTED

	SAMPLE TYPE	SAMPLE ID	COMMENTS
1.			
2.			

3.			

VERBAL INSTRUCTIONS GIVEN TO CONTRACTOR

	NAMES	INSTRUCTION	REACTION	REMARKS
1.				
2.				
3.				
4.				

NOTES –

DESIGN MODIFICATIONS

	DESCRIPTION OF MODIFICATION	REASON	ENGINEER APPROVAL?
1.			
2.			

VISITORS

	TIME	NAME	REPRESENTING	REMARKS
1.	**1:30**	**Ralph, Idaho**	**NCI**	**Visited about how to conceal conduits. Visited well house.**
2.				
3.				
4.				
5.				

NOTES

- **Chlorinated temporary water system.**
- **1 soft dig vac operating down West Alley. Should be the last service line to locate. Kent found all curb boxes except one.**
- **Masonry - Interior wall is 8″. Didn't use bull blocks on openings.**
- **Tank – finished removing forms. Placed some rip-rap for splash pad. Going to place more rip-rap.**
- **Let Jim know how many anchor bolts to get so he can give to masonry contractor and they will place in grout on top block so when installing roof they won't have to drill holes.**
- **Not clear on how larger electric conduits will be concealed. Need to talk to Mike with utility company.**

REMARKS – (Include controversial matters, information, instructions, disagreements, or any other miscellaneous remarks):

OVERSIGHT SIGNATURE	DATE	PROJECT MANAGER INITIALS	DATE

CONSTRUCTION DAILY ACTIVITY REPORT

TO: Montana Department of Environmental Quality Remediation Division - Mine Waste Cleanup Bureau Helena, MT Attn: Tom Henderson	REPORT NUMBER **#40**
PROJECT: Sand Coulee, water system replacement	DATE **Monday, 10-13-2014**
CONTRACTOR: Boland Construction Great Falls, MT	DEQ CONTRACT NUMBER
HAS ANYTHING DEVELOPED ON THE WORK WHICH MIGHT LEAD TO A CHANGE ORDER OR FINDING OF FACT? ☐ NO ☐ YES	WEATHER **Sunny**
HEALTH AND SAFETY Was a Job Safety Meeting held this date? ☐ NO ☐ YES	TEMPERATURE MINIMUM **65** MAXIMUM **75**

NUMBER OF CONTRACTOR'S EMPLOYEES				24 HOUR PRECIPITATION
SUPERVISORY	OPERATORS	LABORERS	TOTAL	**0**
Steve C.	**6**	**7**	**14**	

SUBCONTRACTORS ON SITE		
	COMPANY NAME	TOTAL EMPLOYEES
1.	**Andre Construction – Meter Pits**	**3**

List the major items of equipment

	units	EQUIPMENT DESCRIPTION	Hours	Comments	
1.	**5**	**Excavators**			
2.	**2**	**Frontend loaders**			
3.	**1**	**Skidsteer**			
4.	**2**	**Soft Dig Vacuum**			
5.	**1**	**Forklift**			
6.		**Concrete Mixers**			
7.					

Notes:

CONSTRUCTION DAILY ACTIVITY REPORT

WORK PERFORMED TODAY

	LOCATION	BID ITEM NUMBER	DESCRIPTION OF WORK PERFORMED
1.	**East Dahn's Lane (Sheet D-7)**		**Station 39+00 to 41+00. Installed fire hydrant at 40+42.**
2.	**Gulch Lane (Below tank hill - Sheet D-3)**		**Connecting to existing main. Installed 6" valve, then 6-8" pipe fitting, (2) 22 ½ vertical bends and 45 horizontal bend. Poured thrust blocks for all bends and the tee on the existing 6".**
3.	**Temp Water**		**Flushing temp water system. Sent sample to lab.**
4.	**Andre Meter Pits**		**Not here today.**
5.	**Well house/Tank**		**Added insulation, rebar, and grouted 1st bond beam. Placing blocks 5-10. Backfilling around outside and inside of tank. Dickman delivered pit run for interior backfill. Backfilling with pit run on the inside of tank footing and native excavated material on the outside. Density testing on interior.**

REASON FOR NO WORK:

INFORMATION ON PROGRESS OF WORK – (Causes for delays, extent of delays, Plant, materials, etc.)

MATERIALS DELIVERED TO SITE

	DESCRIPTION
1.	
2.	
3.	

NOTE

INSPECTIONS AND TEST (Include comment pertaining to contractors activities)

	TESTS	RESULTS		COMMENT
1.	**NCI Density Testing**			
2.				

SAMPLES COLLECTED

	SAMPLE TYPE	SAMPLE ID	COMMENTS
1.			
2.			
3.			

CONSTRUCTION DAILY ACTIVITY REPORT

VERBAL INSTRUCTIONS GIVEN TO CONTRACTOR

	NAMES	INSTRUCTION	REACTION	REMARKS
1.				
2.				
3.				
4.				

NOTES –

DESIGN MODIFICATIONS

	DESCRIPTION OF MODIFICATION	REASON	ENGINEER APPROVAL?
1.			
2.			

VISITORS

	TIME	NAME	REPRESENTING	REMARKS
1.				
2.				
3.				
4.				
5.				

NOTES

- **1 soft dig vac locating service line on East Dahn's Lane at Station 41+40.**
- **Asked Jim to pick up (20) ½ " x 10" anchor bolts for top bond beam.**

REMARKS – (Include controversial matters, information, instructions, disagreements, or any other miscellaneous remarks):

OVERSIGHT SIGNATURE	DATE	PROJECT MANAGER INITIALS	DATE

CONSTRUCTION DAILY ACTIVITY REPORT

TO: Montana Department of Environmental Quality Remediation Division - Mine Waste Cleanup Bureau Helena, MT Attn: Tom Henderson	REPORT NUMBER **#41**
PROJECT: Sand Coulee, water system replacement	DATE **Tuesday, 10-14-2014**
CONTRACTOR: Boland Construction Great Falls, MT	DEQ CONTRACT NUMBER
HAS ANYTHING DEVELOPED ON THE WORK WHICH MIGHT LEAD TO A CHANGE ORDER OR FINDING OF FACT? ☐ NO ☐ YES	WEATHER **Sunny**
HEALTH AND SAFETY Was a Job Safety Meeting held this date? ☐ NO ☐ YES	TEMPERATURE MINIMUM **65** / MAXIMUM **75**

NUMBER OF CONTRACTOR'S EMPLOYEES				24 HOUR PRECIPITATION
SUPERVISORY	OPERATORS	LABORERS	TOTAL	**0**
Steve C.	**6**	**7**	**14**	

SUBCONTRACTORS ON SITE		
	COMPANY NAME	TOTAL EMPLOYEES
1.	**Andre Construction – Meter Pits**	**3**

List the major items of equipment

	units	EQUIPMENT DESCRIPTION	Hours	Comments	
1.	**5**	**Excavators**			
2.	**2**	**Frontend loaders**			
3.	**1**	**Skidsteer**			
4.	**2**	**Soft Dig Vacuum**			
5.	**1**	**Forklift**			
6.		**Concrete Mixers**			
7.					

Notes:

CONSTRUCTION DAILY ACTIVITY REPORT

WORK PERFORMED TODAY

	LOCATION	BID ITEM NUMBER	DESCRIPTION OF WORK PERFORMED
1.	**East Dahn's Lane (Sheet D-7)**		**Station 41+00 to 43+50.**
2.	**Gulch Lane (Below tank hill - Sheet D-3)**		**Finished backfilling and compacting.**
3.	**Andre Meter Pits**		**Not here today.**
4.	**Temporary Water East Alley/Dahn's Lane (Sheet D-12)**		**Setting up temp water system. Excavated around main and installed (3) 4" valves down East Alley. Installing tee and valve on service line (servicing 4 houses to the southeast - house #'s 15, 150, 70, 160) to backfill with temporary water using their existing service line.**
5.	**Well house/Tank**		**Added insulation, rebar, and grouted 2ndst bond beam. Placing blocks 10-15. Continued backfilling and compacting around outside and inside of tank.**

REASON FOR NO WORK:

INFORMATION ON PROGRESS OF WORK – (Causes for delays, extent of delays, Plant, materials, etc.)

MATERIALS DELIVERED TO SITE

	DESCRIPTION
1.	
2.	
3.	

NOTE

INSPECTIONS AND TEST (Include comment pertaining to contractors activities)

	TESTS	RESULTS		COMMENT
1.	**NCI Density Testing**			
2.				

SAMPLES COLLECTED

	SAMPLE TYPE	SAMPLE ID	COMMENTS
1.			

2.			
3.			

VERBAL INSTRUCTIONS GIVEN TO CONTRACTOR

	NAMES	INSTRUCTION	REACTION	REMARKS
1.				
2.				
3.				
4.				

NOTES –

DESIGN MODIFICATIONS

	DESCRIPTION OF MODIFICATION	REASON	ENGINEER APPROVAL?
1.			
2.			

VISITORS

	TIME	NAME	REPRESENTING	REMARKS
1.				
2.				
3.				
4.				
5.				

NOTES

- **Weekly meeting with DEQ, Hydrometrics, District, Boland and NCI. See meeting notes.**
- **Hit concrete culvert on East Dahn's Lane at about Station 42+70. Culvert was not indicated on plans. Culvert was completely filled with soil and residents had filled in ditch. Didn't repair.**
- **Approved moving valve on sheet D-7 Station 45-43 about 30 feet closer to hydrant at about Station 45+13 for flushing purposes.**

REMARKS – (Include controversial matters, information, instructions, disagreements, or any other miscellaneous remarks):

OVERSIGHT SIGNATURE	DATE	PROJECT MANAGER INITIALS	DATE

CONSTRUCTION DAILY ACTIVITY REPORT

TO: Montana Department of Environmental Quality Remediation Division - Mine Waste Cleanup Bureau Helena, MT Attn: Tom Henderson	REPORT NUMBER **#42**
PROJECT: Sand Coulee, water system replacement	DATE **Wednesday, 10-15-2014**
CONTRACTOR: Boland Construction Great Falls, MT	DEQ CONTRACT NUMBER
HAS ANYTHING DEVELOPED ON THE WORK WHICH MIGHT LEAD TO A CHANGE ORDER OR FINDING OF FACT? ☐ NO ☐ YES	WEATHER **Sunny**
HEALTH AND SAFETY Was a Job Safety Meeting held this date? ☐ NO ☐ YES	TEMPERATURE MINIMUM **65** / MAXIMUM **75**

NUMBER OF CONTRACTOR'S EMPLOYEES

SUPERVISORY	OPERATORS	LABORERS	TOTAL
Steve C.	**6**	**7**	**14**

24 HOUR PRECIPITATION: **0**

SUBCONTRACTORS ON SITE

COMPANY NAME	TOTAL EMPLOYEES
1. **Andre Construction – Meter Pits**	**3**
2. **Cooper Masonry – Well House**	**4**

List the major items of equipment

	units	EQUIPMENT DESCRIPTION	Hours	Comments	
1.	**5**	**Excavators**			
2.	**2**	**Frontend loaders**			
3.	**1**	**Skidsteer**			
4.	**2**	**Soft Dig Vacuum**			
5.	**1**	**Forklift**			
6.		**Concrete Mixers**			
7.					

Notes:

CONSTRUCTION DAILY ACTIVITY REPORT

WORK PERFORMED TODAY

	LOCATION	BID ITEM NUMBER	DESCRIPTION OF WORK PERFORMED
1.	**East Dahn's Lane (Sheet D-7)**		**Station 43+50 to 45+00.**
2.	**West Alley (Sheet D-11) Temp Water**		**Installed pipe station 12+35 to 13+50. Repaired service line that is hooked up to temporary water.**
3.	**Tank**		**Continued backfilling and compacting.**
4.	**Andre Meter Pits**		**Installed meter at house 40 on Fortune Lane.**
5.	**Well house**		**Outlets and electrical conduits installed. Finished placing block on all outside walls.**

REASON FOR NO WORK:

INFORMATION ON PROGRESS OF WORK – (Causes for delays, extent of delays, Plant, materials, etc.)

MATERIALS DELIVERED TO SITE

	DESCRIPTION
1.	
2.	
3.	

NOTE

INSPECTIONS AND TEST (Include comment pertaining to contractors activities)

	TESTS	RESULTS		COMMENT
1.	**NCI Density Testing**			
2.				

SAMPLES COLLECTED

	SAMPLE TYPE	SAMPLE ID	COMMENTS
1.			
2.			
3.			

CONSTRUCTION DAILY ACTIVITY REPORT

VERBAL INSTRUCTIONS GIVEN TO CONTRACTOR

	NAMES	INSTRUCTION	REACTION	REMARKS
1.				
2.				
3.				
4.				

NOTES –

DESIGN MODIFICATIONS

	DESCRIPTION OF MODIFICATION	REASON	ENGINEER APPROVAL?
1.			
2.			

VISITORS

	TIME	NAME	REPRESENTING	REMARKS
1.				
2.				
3.				
4.				
5.				

NOTES

REMARKS – (Include controversial matters, information, instructions, disagreements, or any other miscellaneous remarks):

OVERSIGHT SIGNATURE	DATE	PROJECT MANAGER INITIALS	DATE

CONSTRUCTION DAILY ACTIVITY REPORT

TO: Montana Department of Environmental Quality Remediation Division - Mine Waste Cleanup Bureau Helena, MT Attn: Tom Henderson	REPORT NUMBER **#43**
PROJECT: Sand Coulee, water system replacement	DATE **Thursday, 10-16-2014**
CONTRACTOR: Boland Construction Great Falls, MT	DEQ CONTRACT NUMBER
HAS ANYTHING DEVELOPED ON THE WORK WHICH MIGHT LEAD TO A CHANGE ORDER OR FINDING OF FACT? ☐ NO ☐ YES	WEATHER **Sunny**
HEALTH AND SAFETY Was a Job Safety Meeting held this date? ☐ NO ☐ YES	TEMPERATURE MINIMUM **65** MAXIMUM **75**

NUMBER OF CONTRACTOR'S EMPLOYEES				24 HOUR PRECIPITATION
SUPERVISORY	OPERATORS	LABORERS	TOTAL	**0**
Steve C.	**6**	**7**	**14**	

SUBCONTRACTORS ON SITE

COMPANY NAME	TOTAL EMPLOYEES
1. **Andre Construction – Meter Pits**	**3**
2. **Cooper Masonry – Well House**	**4**

List the major items of equipment

	units	EQUIPMENT DESCRIPTION	Hours	Comments	
1.	**5**	**Excavators**			
2.	**2**	**Frontend loaders**			
3.	**1**	**Skidsteer**			
4.	**2**	**Soft Dig Vacuum**			
5.	**1**	**Forklift**			
6.		**Concrete Mixers**			
7.					

Notes:

CONSTRUCTION DAILY ACTIVITY REPORT

WORK PERFORMED TODAY

	LOCATION	BID ITEM NUMBER	DESCRIPTION OF WORK PERFORMED
1.	**East Dahn's Lane (Sheet D-7)**		**Installed fire hydrant. Installed valve, test tap, and 90 degree bend. Station 45+00 to 45+43 (90 degree bend). Then Station 22+97 to 21+50.**
2.	**West Alley (Sheet D-11) Temp Water**		**Backfilling and compacting around service line connected to temp water after repairing leak. Station 13+50 to 14+80. Test results for temp water not back yet.**
3.	**Tank**		**Backfilled and compacted with base course to slab elevation.**
4.	**Andre Meter Pits**		**Installed meter at house 110 on Fortune Lane.**
5.	**Well house**		**Placing block on interior wall.**

REASON FOR NO WORK:

INFORMATION ON PROGRESS OF WORK – (Causes for delays, extent of delays, Plant, materials, etc.)

MATERIALS DELIVERED TO SITE

	DESCRIPTION
1.	
2.	
3.	

NOTE

INSPECTIONS AND TEST (Include comment pertaining to contractors activities)

	TESTS	RESULTS		COMMENT
1.	**NCI Density Testing**			
2.				

SAMPLES COLLECTED

	SAMPLE TYPE	SAMPLE ID	COMMENTS
1.			
2.			
3.			

CONSTRUCTION DAILY ACTIVITY REPORT

VERBAL INSTRUCTIONS GIVEN TO CONTRACTOR

	NAMES	INSTRUCTION	REACTION	REMARKS
1.				
2.				
3.				
4.				

NOTES –

DESIGN MODIFICATIONS

	DESCRIPTION OF MODIFICATION	REASON	ENGINEER APPROVAL?
1.			
2.			

VISITORS

	TIME	NAME	REPRESENTING	REMARKS
1.	**1:30**	**Ralph**	**NCI**	
2.				
3.				
4.				
5.				

NOTES

- **3:30 exploratory vac started locating existing main on Gulch Lane to determine hydrant depths needed.**
- **Forbes said he wouldn't sign easement.**
- **Need to find service line to House 482.**
- **Torrey (United Electric) will call me tomorrow when he is out. He said he would put lights and outside receptacle between block and brick.**
- **Requested 4 compressive strength tests each of mortar and grout.**
- **Pressure tested first section (about 1350 feet) of pipe. Started at connection to existing 6" main below tank hill (Sheet D-2) and pressure tested along upper West (D-8) and Rusty Ditch (D-9) to valve at Station 12+00. Tested at 120 psi for 2.5 hours from 1:00 to 3:30. Pressure was 120 psi at 1:00 and 120 psi at 3:30. After pressure testing chlorinated same section of pipe.**

REMARKS – (Include controversial matters, information, instructions, disagreements, or any other miscellaneous remarks):

OVERSIGHT SIGNATURE	DATE	PROJECT MANAGER INITIALS	DATE

CONSTRUCTION DAILY ACTIVITY REPORT

TO: Montana Department of Environmental Quality Remediation Division - Mine Waste Cleanup Bureau Helena, MT Attn: Tom Henderson	REPORT NUMBER **#44**
PROJECT: Sand Coulee, water system replacement	DATE **Friday, 10-17-2014**
CONTRACTOR: Boland Construction Great Falls, MT	DEQ CONTRACT NUMBER
HAS ANYTHING DEVELOPED ON THE WORK WHICH MIGHT LEAD TO A CHANGE ORDER OR FINDING OF FACT? ☐ NO ☐ YES	WEATHER **Sunny**
HEALTH AND SAFETY Was a Job Safety Meeting held this date? ☐ NO ☐ YES	TEMPERATURE MINIMUM **65** MAXIMUM **75**

NUMBER OF CONTRACTOR'S EMPLOYEES				24 HOUR PRECIPITATION
SUPERVISORY	OPERATORS	LABORERS	TOTAL	**0**
Steve C.	**6**	**7**	**14**	

SUBCONTRACTORS ON SITE

COMPANY NAME	TOTAL EMPLOYEES
1. **Andre Construction – Meter Pits**	**3**
2. **Cooper Masonry – Well House**	**4**

List the major items of equipment

	units	EQUIPMENT DESCRIPTION	Hours	Comments	
1.	**5**	**Excavators**			
2.	**2**	**Frontend loaders**			
3.	**1**	**Skidsteer**			
4.	**2**	**Soft Dig Vacuum**			
5.	**1**	**Forklift**			
6.		**Concrete Mixers**			
7.					

Notes:

CONSTRUCTION DAILY ACTIVITY REPORT

WORK PERFORMED TODAY

	LOCATION	BID ITEM NUMBER	DESCRIPTION OF WORK PERFORMED
1.	**Gulch Lane (Sheet D-3)**		**Installed fire hydrant at Station 12+94.**
2.	**West Alley (Sheet D-11) Temp Water**		**Station 14+80 to 15+80 (station 15+80 is the 1st 4" valve on existing main). Will put first section of homes on temporary water Monday. Temporary water tests came back good.**
3.	**Tank**		**Earthwork for inflow meter manhole.**
4.	**Andre Meter Pits**		**Installed 2 meter pits on Fortune Lane.**
5.	**Well house**		**Placing brick and insulation material. Placed 2" polystyrene board and rubber/polyethylene thru-wall flashing.**

REASON FOR NO WORK:

INFORMATION ON PROGRESS OF WORK – (Causes for delays, extent of delays, Plant, materials, etc.)

MATERIALS DELIVERED TO SITE

	DESCRIPTION
1.	
2.	
3.	

NOTE

INSPECTIONS AND TEST (Include comment pertaining to contractors activities)

	TESTS	RESULTS		COMMENT
1.	**NCI Density Testing**			
2.				

SAMPLES COLLECTED

	SAMPLE TYPE	SAMPLE ID	COMMENTS
1.			
2.			
3.			

CONSTRUCTION DAILY ACTIVITY REPORT

VERBAL INSTRUCTIONS GIVEN TO CONTRACTOR

	NAMES	INSTRUCTION	REACTION	REMARKS
1.				
2.				
3.				
4.				

NOTES –

DESIGN MODIFICATIONS

	DESCRIPTION OF MODIFICATION	REASON	ENGINEER APPROVAL?
1.			
2.			

VISITORS

	TIME	NAME	REPRESENTING	REMARKS
1.				
2.				
3.				
4.				
5.				

NOTES

- **Exploratory vac continued on Gulch Lane to determine hydrant depths needed.**
- **David N. (NCI) surveyed as-builts below tank hill.**
- **Temporary water sample results came back from the lab. Results came back good. First section of houses will be hooked up to temporary water Monday.**
- **Met with Torrey (United Electric) at 8:30. I mentioned we need to move the outside receptacle to 48". He said they will core drill for the larger conduits. He will return Monday to put up outside lights, motion sensor, and outside receptacle. The insulation he will attach it to was not high enough on Friday to complete the work.**
- **TD&H came out to collect cylinders of mortar and ground for compressive strength testing. Chlorinated 1st section (1350 feet) of pipe. Will let it sit over the weekend and flush Monday.**

REMARKS – (Include controversial matters, information, instructions, disagreements, or any other miscellaneous remarks):

OVERSIGHT SIGNATURE	DATE	PROJECT MANAGER INITIALS	DATE

CONSTRUCTION DAILY ACTIVITY REPORT

TO: Montana Department of Environmental Quality Remediation Division - Mine Waste Cleanup Bureau Helena, MT Attn: Tom Henderson	REPORT NUMBER **#45**
PROJECT: Sand Coulee, water system replacement	DATE **Monday, 10-20-2014**
CONTRACTOR: Boland Construction Great Falls, MT	DEQ CONTRACT NUMBER
HAS ANYTHING DEVELOPED ON THE WORK WHICH MIGHT LEAD TO A CHANGE ORDER OR FINDING OF FACT? ☐ NO ☐ YES	WEATHER **Sunny**
HEALTH AND SAFETY Was a Job Safety Meeting held this date? ☐ NO ☐ YES	TEMPERATURE MINIMUM **65** MAXIMUM **75**

NUMBER OF CONTRACTOR'S EMPLOYEES				24 HOUR PRECIPITATION
SUPERVISORY	OPERATORS	LABORERS	TOTAL	**0**
Steve C.	**6**	**7**	**14**	

SUBCONTRACTORS ON SITE

COMPANY NAME	TOTAL EMPLOYEES
1. **Andre Construction – Meter Pits**	**3**
2. **Cooper Masonry – Well House**	**4**

List the major items of equipment

	units	EQUIPMENT DESCRIPTION	Hours	Comments	
1.	**5**	**Excavators**			
2.	**2**	**Frontend loaders**			
3.	**1**	**Skidsteer**			
4.	**2**	**Soft Dig Vacuum**			
5.	**1**	**Forklift**			
6.		**Concrete Mixers**			
7.					

Notes:

CONSTRUCTION DAILY ACTIVITY REPORT

WORK PERFORMED TODAY

	LOCATION	BID ITEM NUMBER	DESCRIPTION OF WORK PERFORMED
1.	**Fire Hall (Sheet D-4)**		**Installing service line to fire station. Broke fire hall service line. It was about 30-40 feet southeast of where shown on plans.**
2.	**West Alley (Sheet D-12) Temp Water**		**Station 15+80 to 17+60. Repaired leak in temporary water pipe fitting.**
3.	**1 soft dig vac**		**Exploratory on Gulch Lane for existing main to install fire hydrants. Found in 1 location, excavating in 2nd location.**
4.	**Andre Meter Pits**		**Installed 2 meter pits on NE end of Dahn's lane at house 120 and West Alley house 540.**
5.	**Well house/ Tank**		**Continued placing brick and insulation material. No work on tank.**

REASON FOR NO WORK:

INFORMATION ON PROGRESS OF WORK – (Causes for delays, extent of delays, Plant, materials, etc.)

MATERIALS DELIVERED TO SITE

	DESCRIPTION
1.	
2.	
3.	

NOTE

INSPECTIONS AND TEST (Include comment pertaining to contractors activities)

	TESTS	RESULTS		COMMENT
1.	**NCI Density Testing**			
2.				

SAMPLES COLLECTED

	SAMPLE TYPE	SAMPLE ID	COMMENTS
1.			
2.			
3.			

VERBAL INSTRUCTIONS GIVEN TO CONTRACTOR

	NAMES	INSTRUCTION	REACTION	REMARKS
1.				
2.				
3.				
4.				

NOTES –

DESIGN MODIFICATIONS

	DESCRIPTION OF MODIFICATION	REASON	ENGINEER APPROVAL?
1.			
2.			

VISITORS

	TIME	NAME	REPRESENTING	REMARKS
1.				
2.				
3.				
4.				
5.				

NOTES

- **Forbes told Steve (as he was closing hydrant valve) not to come on his property.**
- **Broke fire hall service line. It was about 30-40 feet southeast of where shown on plans. Existing galvanized pipe is thin and rusted.**
- **Water in meter pits on Gulch Lane is 3' bgs.**
- **May need to install coated meter pits, curb boxes, etc. on houses 71, 73, and 77 northeast of bridge on Gulch Lane.**
- **Weekly meeting with NCI, Boland, District, Hydrometrics and DEQ. See meeting notes.**

REMARKS – (Include controversial matters, information, instructions, disagreements, or any other miscellaneous remarks):

OVERSIGHT SIGNATURE	DATE	PROJECT MANAGER INITIALS	DATE

CONSTRUCTION DAILY ACTIVITY REPORT

TO: Montana Department of Environmental Quality Remediation Division - Mine Waste Cleanup Bureau Helena, MT Attn: Tom Henderson	REPORT NUMBER **#46**
PROJECT: Sand Coulee, water system replacement	DATE **Tuesday, 10-21-2014**
CONTRACTOR: Boland Construction Great Falls, MT	DEQ CONTRACT NUMBER
HAS ANYTHING DEVELOPED ON THE WORK WHICH MIGHT LEAD TO A CHANGE ORDER OR FINDING OF FACT? ☐ NO ☐ YES	WEATHER **Cloudy/Rained in the afternoon**
HEALTH AND SAFETY Was a Job Safety Meeting held this date? ☐ NO ☐ YES	TEMPERATURE MINIMUM **55** MAXIMUM **60**

NUMBER OF CONTRACTOR'S EMPLOYEES				24 HOUR PRECIPITATION
SUPERVISORY	OPERATORS	LABORERS	TOTAL	**0**
Steve C.	**6**	**7**	**14**	

SUBCONTRACTORS ON SITE

COMPANY NAME	TOTAL EMPLOYEES
1. **Andre Construction – Meter Pits**	**3**
2. **Cooper Masonry – Well House**	**4**

List the major items of equipment

	units	EQUIPMENT DESCRIPTION	Hours	Comments	
1.	**5**	**Excavators**			
2.	**2**	**Frontend loaders**			
3.	**1**	**Skidsteer**			
4.	**2**	**Soft Dig Vacuum**			
5.	**1**	**Forklift**			
6.		**Concrete Mixers**			
7.					

Notes:

CONSTRUCTION DAILY ACTIVITY REPORT

WORK PERFORMED TODAY

	LOCATION	BID ITEM NUMBER	DESCRIPTION OF WORK PERFORMED
1.	**Fire Hall (Sheet D-4)**		**Repaired existing service line to fire station. Connected new service line to existing service line.**
2.	**West Alley (Sheet D-12) Temp Water**		**Station 17+60 to 18+20. Repaired existing main in two locations.**
3.	**1 soft dig vac**		**Exploratory on Gulch Lane for existing main to install fire hydrants. Found in 2 locations, excavating in 3rd location.**
4.	**Andre Meter Pits**		**Installed 1 meter pit at house 55.**
5.	**Well house/ Tank**		**Continued placing brick and insulation material. No work on tank.**

REASON FOR NO WORK: Started raining in the early afternoon. Boland left site about 4:00.

INFORMATION ON PROGRESS OF WORK – (Causes for delays, extent of delays, Plant, materials, etc.)

MATERIALS DELIVERED TO SITE

	DESCRIPTION
1.	
2.	
3.	

NOTE

INSPECTIONS AND TEST (Include comment pertaining to contractors activities)

	TESTS	RESULTS		COMMENT
1.	**NCI Density Testing**			
2.				

SAMPLES COLLECTED

	SAMPLE TYPE	SAMPLE ID	COMMENTS
1.			
2.			
3.			

CONSTRUCTION DAILY ACTIVITY REPORT

VERBAL INSTRUCTIONS GIVEN TO CONTRACTOR

	NAMES	INSTRUCTION	REACTION	REMARKS
1.				
2.				
3.				
4.				

NOTES –

DESIGN MODIFICATIONS

	DESCRIPTION OF MODIFICATION	REASON	ENGINEER APPROVAL?
1.			
2.			

VISITORS

	TIME	NAME	REPRESENTING	REMARKS
1.				
2.				
3.				
4.				
5.				

NOTES

- **Started raining early afternoon. Boland left site about 4:00**

REMARKS – (Include controversial matters, information, instructions, disagreements, or any other miscellaneous remarks):

OVERSIGHT SIGNATURE	DATE	PROJECT MANAGER INITIALS	DATE

CONSTRUCTION DAILY ACTIVITY REPORT

TO: Montana Department of Environmental Quality Remediation Division - Mine Waste Cleanup Bureau Helena, MT Attn: Tom Henderson	REPORT NUMBER **#47**
PROJECT: Sand Coulee, water system replacement	DATE **Wednesday, 10-22-2014**
CONTRACTOR: Boland Construction Great Falls, MT	DEQ CONTRACT NUMBER
HAS ANYTHING DEVELOPED ON THE WORK WHICH MIGHT LEAD TO A CHANGE ORDER OR FINDING OF FACT? ☐ NO ☐ YES	WEATHER **Cloudy/Rained in the afternoon**
HEALTH AND SAFETY Was a Job Safety Meeting held this date? ☐ NO ☐ YES	TEMPERATURE MINIMUM **50** MAXIMUM **55**

NUMBER OF CONTRACTOR'S EMPLOYEES				24 HOUR PRECIPITATION
SUPERVISORY	OPERATORS	LABORERS	TOTAL	**0**
Steve C.	**6**	**7**	**14**	

SUBCONTRACTORS ON SITE

COMPANY NAME	TOTAL EMPLOYEES
1. **Cooper Masonry – Well House**	**4**

List the major items of equipment

	units	EQUIPMENT DESCRIPTION	Hours	Comments	
1.	**5**	**Excavators**			
2.	**2**	**Frontend loaders**			
3.	**1**	**Skidsteer**			
4.	**2**	**Soft Dig Vacuum**			
5.	**1**	**Forklift**			
6.		**Concrete Mixers**			
7.					

Notes:

CONSTRUCTION DAILY ACTIVITY REPORT

WORK PERFORMED TODAY

	LOCATION	BID ITEM NUMBER	DESCRIPTION OF WORK PERFORMED
1.	**Tank Hill (Sheet D-1)**		**Excavating for PRV manhole which will be installed tomorrow.**
2.	**West Alley (Sheet D-12) Temp Water**		**Station 18+20 to 19+40.**
3.	**1 soft dig vac**		**Exploratory at SW end of Gulch Lane excavating for final fire hydrant location.**
4.	**Well house/Tank**		**Continued placing brick and insulation material. Completed grading and leveling for inflow meter manhole which will be installed tomorrow.**
5.			

REASON FOR NO WORK: Started raining in the early afternoon. Boland left site about 4:00.

INFORMATION ON PROGRESS OF WORK – (Causes for delays, extent of delays, Plant, materials, etc.)

MATERIALS DELIVERED TO SITE

	DESCRIPTION
1.	
2.	
3.	

NOTE

INSPECTIONS AND TEST (Include comment pertaining to contractors activities)

	TESTS	RESULTS		COMMENT
1.	**NCI Density Testing**			
2.				

SAMPLES COLLECTED

	SAMPLE TYPE	SAMPLE ID	COMMENTS
1.			
2.			
3.			

VERBAL INSTRUCTIONS GIVEN TO CONTRACTOR

	NAMES	INSTRUCTION	REACTION	REMARKS
1.				
2.				
3.				
4.				

NOTES –

DESIGN MODIFICATIONS

	DESCRIPTION OF MODIFICATION	REASON	ENGINEER APPROVAL?
1.			
2.			

VISITORS

	TIME	NAME	REPRESENTING	REMARKS
1.				
2.				
3.				
4.				
5.				

NOTES

- **Air pressure tested drain and outlet pipe at 6 psi for 10 minutes. Both held pressure. Will test inlet pipe tomorrow (Thursday). Could not get good seal, balloon used to seal pipe was leaking.**
- **Existing main is 6'4" where located on Gulch Lane. 3rd fire hydrant location on southwest end of Gulch Lane has not been found yet.**
- **Should have results back late today on bacteriological tests on 1st section of new main that was pressure tested. Results are sent directly to Kent.**
- **Tom Henderson will visit with Forbes this Friday.**

REMARKS – (Include controversial matters, information, instructions, disagreements, or any other miscellaneous remarks):

OVERSIGHT SIGNATURE	DATE	PROJECT MANAGER INITIALS	DATE

CONSTRUCTION DAILY ACTIVITY REPORT

TO: Montana Department of Environmental Quality Remediation Division - Mine Waste Cleanup Bureau Helena, MT Attn: Tom Henderson	REPORT NUMBER **#48**
PROJECT: Sand Coulee, water system replacement	DATE **Thursday, 10-23-2014**
CONTRACTOR: Boland Construction Great Falls, MT	DEQ CONTRACT NUMBER
HAS ANYTHING DEVELOPED ON THE WORK WHICH MIGHT LEAD TO A CHANGE ORDER OR FINDING OF FACT? ☐ NO ☐ YES	WEATHER **Partly Cloudy**
HEALTH AND SAFETY Was a Job Safety Meeting held this date? ☐ NO ☐ YES	TEMPERATURE MINIMUM **55** / MAXIMUM **60**

NUMBER OF CONTRACTOR'S EMPLOYEES

SUPERVISORY	OPERATORS	LABORERS	TOTAL
Steve C.	**6**	**7**	**14**

24 HOUR PRECIPITATION: **0**

SUBCONTRACTORS ON SITE

COMPANY NAME	TOTAL EMPLOYEES
1. **Cooper Masonry – Well House**	**4**
2. **United Electric – Well House**	**1**

List the major items of equipment

	units	EQUIPMENT DESCRIPTION	Hours	Comments	
1.	**5**	**Excavators**			
2.	**2**	**Frontend loaders**			
3.	**1**	**Skidsteer**			
4.	**2**	**Soft Dig Vacuum**			
5.	**1**	**Forklift**			
6.		**Concrete Mixers**			
7.					

Notes:

CONSTRUCTION DAILY ACTIVITY REPORT

WORK PERFORMED TODAY

	LOCATION	BID ITEM NUMBER	DESCRIPTION OF WORK PERFORMED
1.	**Tank Hill (Sheet D-1)**		**Earthwork for PRV manhole and installing fire hydrants on gulch lane. Started installing 1st (1 of 3) fire hydrant (closest to bridge) on Gulch Lane.**
2.	**West Alley (Sheet D-12) Temp Water**		**Station 19+40 to 20+60. 4" to 2" reducer found at Station 20+00 and 2" line continues running NE down alley. Crew will remove 2" line from remaining portion of alley and connect new ¾" polyline to replace 2" service line for service to 1 last house in alley.**
3.	**Tank Hill and Top of Hill**		**Set inflow meter manhole and PRV manhole. Continued laying brick.**
4.			
5.			

REASON FOR NO WORK: Started raining in the early afternoon. Boland left site about 4:00.

INFORMATION ON PROGRESS OF WORK – (Causes for delays, extent of delays, Plant, materials, etc.)

MATERIALS DELIVERED TO SITE

	DESCRIPTION
1.	
2.	
3.	

NOTE

INSPECTIONS AND TEST (Include comment pertaining to contractors activities)

	TESTS	RESULTS		COMMENT
1.	**NCI Density Testing**			
2.				

SAMPLES COLLECTED

	SAMPLE TYPE	SAMPLE ID	COMMENTS
1.			

2.			
3.			

VERBAL INSTRUCTIONS GIVEN TO CONTRACTOR

	NAMES	INSTRUCTION	REACTION	REMARKS
1.				
2.				
3.				
4.				

NOTES –

DESIGN MODIFICATIONS

	DESCRIPTION OF MODIFICATION	REASON	ENGINEER APPROVAL?
1.			
2.			

VISITORS

	TIME	NAME	REPRESENTING	REMARKS
1.	**1:30**	**Ralph, Idaho**	**NCI**	
2.				
3.				
4.				

NOTES

- **Left Kent voicemail regarding service line on southwest end of Gulch Lane. Homeowner gave rough idea of where line is located but exact location is unknown. Curb box is not visible and cap is plastic.**
- **Ralph and Idaho approved a vertical 90 degree bend on pipe coming out of uphill (NW) side of manhole due to large rock located 2-3 feet on uphill side of manhole. After 90 degree bend will be a vertical 45 degree bend to bring pipe grade near to that of slope grade. Will set forms on both sides along both bends and encase both bends in concrete.**
- **Forms and rebar for tank will be set Friday. Barry said concrete pour will probably be on Thursday. Tank subcontractor will be onsite for pour.**
- **United Electric was here and installed outlets/conduits for outside lights and motion sensor.**
- **Need plumber and floor plans from Larry (fire hall chief) to evaluate piping options in fire hall.**
- **Existing main at all fire hydrant locations has been found. Main is about 6' deep at all locations. Existing line dead ends at fire hydrant on SW end of Gulch Lane. At this location Ralph and Idaho agreed to rip out existing fire hydrant, and extent the main another 5 to 10 feet and install new hydrant perpendicular to main on NW side of main at about 4-5 feet offset (of main).**

REMARKS – (Include controversial matters, information, instructions, disagreements, or any other miscellaneous remarks):

OVERSIGHT SIGNATURE	DATE	PROJECT MANAGER INITIALS	DATE

CONSTRUCTION DAILY ACTIVITY REPORT

TO: Montana Department of Environmental Quality Remediation Division - Mine Waste Cleanup Bureau Helena, MT Attn: Tom Henderson	REPORT NUMBER **#49**
PROJECT: Sand Coulee, water system replacement	DATE **Friday, 10-24-2014**
CONTRACTOR: Boland Construction Great Falls, MT	DEQ CONTRACT NUMBER
HAS ANYTHING DEVELOPED ON THE WORK WHICH MIGHT LEAD TO A CHANGE ORDER OR FINDING OF FACT? ☐ NO ☐ YES	WEATHER **Partly Cloudy**
HEALTH AND SAFETY Was a Job Safety Meeting held this date? ☐ NO ☐ YES	TEMPERATURE MINIMUM **55** MAXIMUM **60**

NUMBER OF CONTRACTOR'S EMPLOYEES				24 HOUR PRECIPITATION
SUPERVISORY	OPERATORS	LABORERS	TOTAL	**0**
Steve C.	**6**	**7**	**14**	

SUBCONTRACTORS ON SITE

COMPANY NAME	TOTAL EMPLOYEES
1. **Cooper Masonry – Well House**	**4**

List the major items of equipment

	units	EQUIPMENT DESCRIPTION	Hours	Comments	
1.	**5**	**Excavators**			
2.	**2**	**Frontend loaders**			
3.	**1**	**Skidsteer**			
4.	**2**	**Soft Dig Vacuum**			
5.	**1**	**Forklift**			
6.		**Concrete Mixers**			
7.					

Notes:

CONSTRUCTION DAILY ACTIVITY REPORT

WORK PERFORMED TODAY

	LOCATION	BID ITEM NUMBER	DESCRIPTION OF WORK PERFORMED
1.	**Tank Hill (Sheet D-1)**		**Backfilled and compacted around PRV manhole. Installed fire hydrant on Gulch Lane (at location closest to bridge) near House 49.**
2.	**West Alley (Sheet D-12) Temp Water**		**Station 20+60 to 21+80. Tied into new main on NE end of Dahn's Lane completing the loop around town. Pipe left to be installed includes fire hydrant runs (2) from West Alley to East Hunter's Road and pipe from tank to bottom of hill.**
3.	**Top of Hill (Tank/Well House)**		**Completed laying brick on outside of well house. Backfilled and compacted around inflow meter manhole. Placed forms and rebar for tank slab.**
4.			
5.			

REASON FOR NO WORK: Started raining in the early afternoon. Boland left site about 4:00.

INFORMATION ON PROGRESS OF WORK – (Causes for delays, extent of delays, Plant, materials, etc.)

MATERIALS DELIVERED TO SITE

	DESCRIPTION
1.	
2.	
3.	

NOTE

INSPECTIONS AND TEST (Include comment pertaining to contractors activities)

	TESTS	RESULTS		COMMENT
1.	**NCI Density Testing**			
2.				

SAMPLES COLLECTED

	SAMPLE TYPE	SAMPLE ID	COMMENTS

1.			
2.			
3.			

VERBAL INSTRUCTIONS GIVEN TO CONTRACTOR

	NAMES	INSTRUCTION	REACTION	REMARKS
1.				
2.				
3.				
4.				

NOTES –

DESIGN MODIFICATIONS

	DESCRIPTION OF MODIFICATION	REASON	ENGINEER APPROVAL?
1.			
2.			

VISITORS

	TIME	NAME	REPRESENTING	REMARKS
1.	**1:30**	**Ralph, Idaho**	**NCI**	
2.				
3.				
4.				

NOTES

- **Kent will try to witch location of service on SW end of Gulch Lane. He doesn't know where it is.**
- **Air pressure tested inflow pipe (under tank) at 7 psi for 10 minutes. Pipe held pressure.**
- **Pressure tested 2nd section (about 1280 feet) of new main. Pressure tested from valve at Station 9+77 (Sheet D-3 – below tank hill) under rusty ditch, along gulch lane, under East Hunter road, around fire hall to station 22+54 (Sheet D-4). Pressure tested for 2 hours from 2:30 to 4:30 at 120 psi. Pressure at 2:30 is 120 psi. Pressure at 4:30 is 120 psi.**
- **Bacteriological tests on 1st section didn't pass. Will rechlorinate and/or reflush this section.**

REMARKS – (Include controversial matters, information, instructions, disagreements, or any other miscellaneous remarks):

OVERSIGHT SIGNATURE	DATE	PROJECT MANAGER INITIALS	DATE

CONSTRUCTION DAILY ACTIVITY REPORT

TO: Montana Department of Environmental Quality Remediation Division - Mine Waste Cleanup Bureau Helena, MT Attn: Tom Henderson	REPORT NUMBER **#50**
PROJECT: Sand Coulee, water system replacement	DATE **Monday, 10-27-2014**
CONTRACTOR: Boland Construction Great Falls, MT	DEQ CONTRACT NUMBER
HAS ANYTHING DEVELOPED ON THE WORK WHICH MIGHT LEAD TO A CHANGE ORDER OR FINDING OF FACT? ☐ NO ☐ YES	WEATHER **Sunny/Windy**
HEALTH AND SAFETY Was a Job Safety Meeting held this date? ☐ NO ☐ YES	TEMPERATURE MINIMUM **55** / MAXIMUM **60**

NUMBER OF CONTRACTOR'S EMPLOYEES				24 HOUR PRECIPITATION
SUPERVISORY	OPERATORS	LABORERS	TOTAL	**0**
Steve C.	**6**	**7**	**14**	

SUBCONTRACTORS ON SITE

COMPANY NAME	TOTAL EMPLOYEES
1. **Cooper Masonry – Well House**	**4**
2. **Andre Meter Pits**	**3**
3. **Engineering America**	**2**

List the major items of equipment

	units	EQUIPMENT DESCRIPTION	Hours	Comments	
1.	**5**	**Excavators**			
2.	**2**	**Frontend loaders**			
3.	**1**	**Skidsteer**			
4.	**2**	**Soft Dig Vacuum**			
5.	**1**	**Forklift**			
6.		**Concrete Mixers**			
7.					

Notes:

CONSTRUCTION DAILY ACTIVITY REPORT

WORK PERFORMED TODAY

	LOCATION	BID ITEM NUMBER	DESCRIPTION OF WORK PERFORMED
1.	**Fire Hydrants (Sheet D-15)**		**Installed fire hydrant on Gulch Lane (at location closest to bridge) near House 49. Began installing fire hydrant near house 41 on Gulch Lane.**
2.	**West Alley (Sheet D-12) Temp Water**		**Removed temporary water piping. Laying pipe and connecting pipe (on surface) for fire hydrant from Alley to East Hunter Road.**
3.	**Top of Hill (Tank/Well House)**		**Finished well house. Cleaning up and offsite tomorrow. Roof trusses and tank arrived on site today.**
4.	**Andre meter pits**		**Installed meter pits in Alley - Houses 542 and 544.**
5.			

REASON FOR NO WORK: Started raining in the early afternoon. Boland left site about 4:00.

INFORMATION ON PROGRESS OF WORK – (Causes for delays, extent of delays, Plant, materials, etc.)

MATERIALS DELIVERED TO SITE

	DESCRIPTION
1.	
2.	
3.	

NOTE

INSPECTIONS AND TEST (Include comment pertaining to contractors activities)

	TESTS	RESULTS		COMMENT
1.	**NCI Density Testing**			
2.				

SAMPLES COLLECTED

	SAMPLE TYPE	SAMPLE ID	COMMENTS
1.			
2.			
3.			

VERBAL INSTRUCTIONS GIVEN TO CONTRACTOR

	NAMES	INSTRUCTION	REACTION	REMARKS
1.				
2.				
3.				
4.				

NOTES –

DESIGN MODIFICATIONS

	DESCRIPTION OF MODIFICATION	REASON	ENGINEER APPROVAL?
1.			
2.			

VISITORS

	TIME	NAME	REPRESENTING	REMARKS
1.				
2.				
3.				
4.				

NOTES

- **Weekly meeting with DEQ, NCI, Hydrometrics, Boland, and District. See meeting notes.**
- **Engineering America was on site adjusting leveling plates for tank with laser.**
- **May need additional height for PRV manhole. Ralph is checking with Tom on this.**

REMARKS – (Include controversial matters, information, instructions, disagreements, or any other miscellaneous remarks):

OVERSIGHT SIGNATURE	DATE	PROJECT MANAGER INITIALS	DATE

CONSTRUCTION DAILY ACTIVITY REPORT

TO: Montana Department of Environmental Quality Remediation Division - Mine Waste Cleanup Bureau Helena, MT Attn: Tom Henderson	REPORT NUMBER **#51**
PROJECT: Sand Coulee, water system replacement	DATE **Tuesday, 10-28-2014**
CONTRACTOR: Boland Construction Great Falls, MT	DEQ CONTRACT NUMBER
HAS ANYTHING DEVELOPED ON THE WORK WHICH MIGHT LEAD TO A CHANGE ORDER OR FINDING OF FACT? ☐ NO ☐ YES	WEATHER **Sunny/Windy**
HEALTH AND SAFETY Was a Job Safety Meeting held this date? ☐ NO ☐ YES	TEMPERATURE MINIMUM **55** / MAXIMUM **60**

NUMBER OF CONTRACTOR'S EMPLOYEES

SUPERVISORY	OPERATORS	LABORERS	TOTAL
Steve C.	**6**	**7**	**14**

24 HOUR PRECIPITATION: **0**

SUBCONTRACTORS ON SITE

COMPANY NAME	TOTAL EMPLOYEES
1. **Cooper Masonry – Well House**	**4**
2. **Andre Meter Pits**	**3**

List the major items of equipment

	units	EQUIPMENT DESCRIPTION	Hours	Comments	
1.	**5**	**Excavators**			
2.	**2**	**Frontend loaders**			
3.	**1**	**Skidsteer**			
4.	**2**	**Soft Dig Vacuum**			
5.	**1**	**Forklift**			
6.		**Concrete Mixers**			
7.					

Notes:

CONSTRUCTION DAILY ACTIVITY REPORT

WORK PERFORMED TODAY

	LOCATION	BID ITEM NUMBER	DESCRIPTION OF WORK PERFORMED
1.	**Fire Hydrants (Sheet D-15)**		**Finished installing fire hydrant near house 41 on Gulch Lane.**
2.	**West Alley (Sheet D-12) Temp Water**		**Excavating and laying pipe in trench for fire hydrant from Alley to East Hunter Road. (NE end of alley)**
3.	**Top of Hill (Tank/Well House)**		**Finished well house. Cleaned area and masonry sub left site. Tank – Installing inlet box and overflow line.**
4.	**Andre meter pits**		**Installed meter pits in Alley - Houses 546 and 548.**
5.			

REASON FOR NO WORK: Started raining in the early afternoon. Boland left site about 4:00.

INFORMATION ON PROGRESS OF WORK – (Causes for delays, extent of delays, Plant, materials, etc.)

MATERIALS DELIVERED TO SITE

	DESCRIPTION
1.	
2.	
3.	

NOTE

INSPECTIONS AND TEST (Include comment pertaining to contractors activities)

	TESTS	RESULTS		COMMENT
1.	**NCI Density Testing**			
2.				

SAMPLES COLLECTED

	SAMPLE TYPE	SAMPLE ID	COMMENTS
1.			
2.			
3.			

VERBAL INSTRUCTIONS GIVEN TO CONTRACTOR

	NAMES	INSTRUCTION	REACTION	REMARKS
1.				
2.				
3.				
4.				

NOTES –

DESIGN MODIFICATIONS

	DESCRIPTION OF MODIFICATION	REASON	ENGINEER APPROVAL?
1.			
2.			

VISITORS

	TIME	NAME	REPRESENTING	REMARKS
1.				
2.				
3.				
4.				

NOTES

- **Change order will be submitted for digging up and replacing 4 curb boxes already installed on Gulch Lane.**
- **Welding onto DIP pipe is OK. Water stop rings will be welded onto DIP between bentonite seal strips**
- **Tank - #6 bundled circumferential rebar to be added**
- **- foam insulation in air spaces between forms and concrete footing**
- **- 2" clearance between concrete and floor circumferential rebar.**
- **- water stop ring will be welded on between bentonite seal strips**
- **- 2 additional mats around inflow/outflow pipe penetrations will be added. These will be identical to rebar around sump, ie. 12 #4 bars 84" long.**
-
-
-

REMARKS – (Include controversial matters, information, instructions, disagreements, or any other miscellaneous remarks):

OVERSIGHT SIGNATURE	DATE	PROJECT MANAGER INITIALS	DATE

CONSTRUCTION DAILY ACTIVITY REPORT

TO: Montana Department of Environmental Quality Remediation Division - Mine Waste Cleanup Bureau Helena, MT Attn: Tom Henderson	REPORT NUMBER **#52**
PROJECT: Sand Coulee, water system replacement	DATE **Wedday, 10-29-2014**
CONTRACTOR: Boland Construction Great Falls, MT	DEQ CONTRACT NUMBER
HAS ANYTHING DEVELOPED ON THE WORK WHICH MIGHT LEAD TO A CHANGE ORDER OR FINDING OF FACT? ☐ NO ☐ YES	WEATHER **Sunny/Windy**
HEALTH AND SAFETY Was a Job Safety Meeting held this date? ☐ NO ☐ YES	TEMPERATURE MINIMUM **55** / MAXIMUM **60**

NUMBER OF CONTRACTOR'S EMPLOYEES				24 HOUR PRECIPITATION
SUPERVISORY	OPERATORS	LABORERS	TOTAL	**0**
Steve C.	**6**	**7**	**14**	

SUBCONTRACTORS ON SITE

COMPANY NAME	TOTAL EMPLOYEES
1. **Engineering America - Tank**	**1**
2. **Andre Meter Pits**	**3**

List the major items of equipment

	units	EQUIPMENT DESCRIPTION	Hours	Comments	
1.	**5**	**Excavators**			
2.	**2**	**Frontend loaders**			
3.	**1**	**Skidsteer**			
4.	**2**	**Soft Dig Vacuum**			
5.	**1**	**Forklift**			
6.		**Concrete Mixers**			
7.					

Notes:

CONSTRUCTION DAILY ACTIVITY REPORT

WORK PERFORMED TODAY

	LOCATION	BID ITEM NUMBER	DESCRIPTION OF WORK PERFORMED
1.	**Fire Hydrants (Sheet D-15)**		**Assembling pipe for last fire hydrant to be installed on Gulch Lane. Installing (replacing) drain pipe from hill near PRV manhole.**
2.	**West Alley (Sheet D-12) Temp Water**		**Backfilled and compacted for pipe from Alley to East Hunter Road for fire hydrant. (NE end of alley) Preparing for 2nd fire hydrant run.**
3.	**Top of Hill (Tank/Well House)**		**Installing overflow line.**
4.	**Andre meter pits**		**Installing dewatering wells on Gulch Lane.**
5.			

REASON FOR NO WORK: Started raining in the early afternoon. Boland left site about 4:00.

INFORMATION ON PROGRESS OF WORK – (Causes for delays, extent of delays, Plant, materials, etc.)

MATERIALS DELIVERED TO SITE

	DESCRIPTION
1.	
2.	
3.	

NOTE

INSPECTIONS AND TEST (Include comment pertaining to contractors activities)

	TESTS	RESULTS		COMMENT
1.	**NCI Density Testing**			
2.				

SAMPLES COLLECTED

	SAMPLE TYPE	SAMPLE ID	COMMENTS
1.			
2.			
3.			

CONSTRUCTION DAILY ACTIVITY REPORT

VERBAL INSTRUCTIONS GIVEN TO CONTRACTOR

	NAMES	INSTRUCTION	REACTION	REMARKS
1.				
2.				
3.				
4.				

NOTES –

DESIGN MODIFICATIONS

	DESCRIPTION OF MODIFICATION	REASON	ENGINEER APPROVAL?
1.			
2.			

VISITORS

	TIME	NAME	REPRESENTING	REMARKS
1.				
2.				
3.				
4.				

NOTES

- **3rd Section of pipe was pressure tested. 3rd Section of pipe is from valve at Station 12+14 (Sheet D-9) under Rusty Ditch, across East Hunter Road to valve at 23+75 (next to church.) Pipe was pressure tested at 120 psi for 2 hours.**
- **1st Section of pipe is being reflushed, 2nd section is being chlorinated. (1st section described in report # 43, 2nd section described in report #49)**
- **We will install corp stop on new main for last house (house 31) on Gulch Lane because we are unable to locate curb stop which may be under rock wall. We will leave existing corp stop (house 35) and install meter pit and curb box on the existing southeast side of the main.**
- **Tank - #6 bundled circumferential rebar to be added. Yes**
- **- foam insulation in air spaces between forms and concrete footing Yes**
- **- 2" clearance between concrete and floor circumferential rebar. Yes**
- **- water stop ring will be welded on between bentonite seal strips Yes**
- **- 2 additional mats around inflow/outflow pipe penetrations will be added. These will be identical to rebar around sump, ie. 12 #4 bars 84" long. Yes**

REMARKS – (Include controversial matters, information, instructions, disagreements, or any other miscellaneous remarks):

OVERSIGHT SIGNATURE	DATE	PROJECT MANAGER INITIALS	DATE

CONSTRUCTION DAILY ACTIVITY REPORT

TO: Montana Department of Environmental Quality Remediation Division - Mine Waste Cleanup Bureau Helena, MT Attn: Tom Henderson	REPORT NUMBER **#55**
PROJECT: Sand Coulee, water system replacement	DATE **Monday, 11-3-2014**
CONTRACTOR: Boland Construction Great Falls, MT	DEQ CONTRACT NUMBER
HAS ANYTHING DEVELOPED ON THE WORK WHICH MIGHT LEAD TO A CHANGE ORDER OR FINDING OF FACT? ☐ NO ☐ YES	WEATHER **Partly Cloudy/Windy**
HEALTH AND SAFETY Was a Job Safety Meeting held this date? ☐ NO ☐ YES	TEMPERATURE MINIMUM **40** MAXIMUM **45**

NUMBER OF CONTRACTOR'S EMPLOYEES

SUPERVISORY	OPERATORS	LABORERS	TOTAL
Steve C.	**6**	**7**	**14**

24 HOUR PRECIPITATION: **0**

SUBCONTRACTORS ON SITE

COMPANY NAME	TOTAL EMPLOYEES
1. **Detail Construction – Well House**	**3**
2. **Andre Meter Pits**	**3**

List the major items of equipment

	units	EQUIPMENT DESCRIPTION	Hours	Comments	
1.	**6**	**Excavators (330C, 320E, 316E, (3) 305E**			
2.	**2**	**Frontend loaders**			
3.	**1**	**Skidsteer**			
4.	**1**	**Soft Dig Vacuum**			
5.	**1**	**Forklift**			
6.	**1**	**Concrete Mixer**			
7.					

Notes:

CONSTRUCTION DAILY ACTIVITY REPORT

WORK PERFORMED TODAY

	LOCATION	BID ITEM NUMBER	DESCRIPTION OF WORK PERFORMED
1.	**Below Tank Hill (Greg's Crew)**		**Excavated uphill of PRV manhole. Excavated for sump drain in PRV manhole.**
2.	**Dahn's Lane and Alley (Jim's Crew)**		**Installed curb stop, and curb box on Dahn's Lane near Station 38+00. Installed corp stop, service line, curb stop and curb box for empty lot next to Post Office.**
3.	**Top of Hill (Tank/Well House)**		**Backfilling and compacting around tank and well house. Well house roof trusses were put up.**
4.	**Andre meter pits**		**Installed meter pits on Gulch Lane.**
5.			

REASON FOR NO WORK: Started raining in the early afternoon. Boland left site about 4:00.

INFORMATION ON PROGRESS OF WORK – (Causes for delays, extent of delays, Plant, materials, etc.)

MATERIALS DELIVERED TO SITE

	DESCRIPTION
1.	
2.	
3.	

NOTE

INSPECTIONS AND TEST (Include comment pertaining to contractors activities)

	TESTS	RESULTS		COMMENT
1.	**NCI Density Testing**			
2.				

SAMPLES COLLECTED

	SAMPLE TYPE	SAMPLE ID	COMMENTS
1.			
2.			

3.			

VERBAL INSTRUCTIONS GIVEN TO CONTRACTOR

	NAMES	INSTRUCTION	REACTION	REMARKS
1.				
2.				
3.				
4.				

NOTES –

DESIGN MODIFICATIONS

	DESCRIPTION OF MODIFICATION	REASON	ENGINEER APPROVAL?
1.			
2.			

VISITORS

	TIME	NAME	REPRESENTING	REMARKS
1.				
2.				
3.				
4.				

NOTES

- **4th Section of pipe was pressure tested at valve across from Post Office Station 10+00 (Sheet D-11). 4rd Section of pipe includes the last 2 loops on the northeast end of town. Pipe was pressure tested at 120 psi for 2 hours from 2:00 pm to 4:00 pm.**

REMARKS – (Include controversial matters, information, instructions, disagreements, or any other miscellaneous remarks):

OVERSIGHT SIGNATURE	DATE	PROJECT MANAGER INITIALS	DATE

CONSTRUCTION DAILY ACTIVITY REPORT

TO: Montana Department of Environmental Quality Remediation Division - Mine Waste Cleanup Bureau Helena, MT Attn: Tom Henderson	REPORT NUMBER **#53**
PROJECT: Sand Coulee, water system replacement	DATE **Thursday, 10-30-2014**
CONTRACTOR: Boland Construction Great Falls, MT	DEQ CONTRACT NUMBER
HAS ANYTHING DEVELOPED ON THE WORK WHICH MIGHT LEAD TO A CHANGE ORDER OR FINDING OF FACT? ☐ NO ☐ YES	WEATHER **Sunny**
HEALTH AND SAFETY Was a Job Safety Meeting held this date? ☐ NO ☐ YES	TEMPERATURE MINIMUM **60** MAXIMUM **65**

NUMBER OF CONTRACTOR'S EMPLOYEES				24 HOUR PRECIPITATION
SUPERVISORY	OPERATORS	LABORERS	TOTAL	**0**
Steve C.	**6**	**7**	**14**	

SUBCONTRACTORS ON SITE	
COMPANY NAME	TOTAL EMPLOYEES
1. **Andre Construction – Meter Pits** 2. **Detail Construction (concrete pour)**	**3**

List the major items of equipment

	units	EQUIPMENT DESCRIPTION	Hours	Comments	
1.	**5**	**Excavators**			
2.	**2**	**Frontend loaders**			
3.	**1**	**Skidsteer**			
4.	**2**	**Soft Dig Vacuum**			
5.	**1**	**Forklift**			
6.		**Concrete Mixers**			
7.					

Notes:

CONSTRUCTION DAILY ACTIVITY REPORT

WORK PERFORMED TODAY

	LOCATION	BID ITEM NUMBER	DESCRIPTION OF WORK PERFORMED
1.	**West Alley (Sheet D-11)**		**Finished installing fire hydrant at SW end of alley.**
2.	**Fire Hydrant Distribution (Sheet D-15)**		**Installing fire hydrant near house 35 at SW end of Gulch Lane.**
3.	**Andre Meter Pits**		**Installed 2 meter pits in Alley.**
4.			
5.	**Tank**		**Poured tank slab using pump truck. As concrete was being poured a stinger was used to remove air pockets and facilitate settlement of concrete into voids. TD&H performed air and slump tests and collected cylinders for compressive strength testing. N**

REASON FOR NO WORK:

INFORMATION ON PROGRESS OF WORK – (Causes for delays, extent of delays, Plant, materials, etc.)

MATERIALS DELIVERED TO SITE

	DESCRIPTION
1.	
2.	
3.	

NOTE

INSPECTIONS AND TEST (Include comment pertaining to contractors activities)

	TESTS	RESULTS		COMMENT
1.	**NCI Density Testing**			
2.				

SAMPLES COLLECTED

	SAMPLE TYPE	SAMPLE ID	COMMENTS
1.			
2.			
3.			

CONSTRUCTION DAILY ACTIVITY REPORT

VERBAL INSTRUCTIONS GIVEN TO CONTRACTOR

	NAMES	INSTRUCTION	REACTION	REMARKS
1.				
2.				
3.				
4.				

NOTES –

DESIGN MODIFICATIONS

	DESCRIPTION OF MODIFICATION	REASON	ENGINEER APPROVAL?
1.			
2.			

VISITORS

	TIME	NAME	REPRESENTING	REMARKS
1.				
2.				
3.				
4.				
5.				

NOTES

- **No pipe bedding on fire hydrant runs from Alley to East Hunter. (Marked on plan sheets D-11 and D-12)**
- **Installed curb stop and curb box on blue polyline in trench at SW end of Gulch Lane near hydrant to see if that line shuts off House 35.**
- **Installed corp stop on new main at SW end of Gulch Lane (2-3 feet NE of hydrant connection) for possible service line to House 31.**

REMARKS – (Include controversial matters, information, instructions, disagreements, or any other miscellaneous remarks):

OVERSIGHT SIGNATURE	DATE	PROJECT MANAGER INITIALS	DATE

CONSTRUCTION DAILY ACTIVITY REPORT

TO: Montana Department of Environmental Quality Remediation Division - Mine Waste Cleanup Bureau Helena, MT Attn: Tom Henderson	REPORT NUMBER **#54**
PROJECT: Sand Coulee, water system replacement	DATE **Friday, 10-31-2014**
CONTRACTOR: Boland Construction Great Falls, MT	DEQ CONTRACT NUMBER
HAS ANYTHING DEVELOPED ON THE WORK WHICH MIGHT LEAD TO A CHANGE ORDER OR FINDING OF FACT? ☐ NO ☐ YES	WEATHER **Sunny**
HEALTH AND SAFETY Was a Job Safety Meeting held this date? ☐ NO ☐ YES	TEMPERATURE MINIMUM **60** MAXIMUM **65**

NUMBER OF CONTRACTOR'S EMPLOYEES

SUPERVISORY	OPERATORS	LABORERS	TOTAL
Steve C.	**6**	**7**	**14**

24 HOUR PRECIPITATION: **0**

SUBCONTRACTORS ON SITE

COMPANY NAME	TOTAL EMPLOYEES
1. **Andre Construction – Meter Pits**	**3**

List the major items of equipment

	units	EQUIPMENT DESCRIPTION	Hours	Comments	
1.	**5**	**Excavators**			
2.	**2**	**Frontend loaders**			
3.	**1**	**Skidsteer**			
4.	**2**	**Soft Dig Vacuum**			
5.	**1**	**Forklift**			
6.		**Concrete Mixers**			
7.					

Notes:

CONSTRUCTION DAILY ACTIVITY REPORT

WORK PERFORMED TODAY

	LOCATION	BID ITEM NUMBER	DESCRIPTION OF WORK PERFORMED
1.	**West Alley (Sheet D-12)**		**Installed service line, curb stop, and curb box near Station 21+75 (next to field - for possible future use)**
2.	**Fire Hydrant Distribution (Sheet D-15)**		**Followed black line on SW end of Gulch Lane looking for curb stop.**
3.	**Andre Meter Pits**		**Installed meter pits on Gulch Lane.**
4.	**Tank Hill**		**Began removing large rocks creating path up the hill leading to tank.**
5.			

REASON FOR NO WORK:

INFORMATION ON PROGRESS OF WORK – (Causes for delays, extent of delays, Plant, materials, etc.)

MATERIALS DELIVERED TO SITE

	DESCRIPTION
1.	
2.	
3.	

NOTE

INSPECTIONS AND TEST (Include comment pertaining to contractors activities)

	TESTS	RESULTS		COMMENT
1.	**NCI Density Testing**			
2.				

SAMPLES COLLECTED

	SAMPLE TYPE	SAMPLE ID	COMMENTS
1.			
2.			
3.			

CONSTRUCTION DAILY ACTIVITY REPORT

VERBAL INSTRUCTIONS GIVEN TO CONTRACTOR

	NAMES	INSTRUCTION	REACTION	REMARKS
1.				
2.				
3.				
4.				

NOTES –

DESIGN MODIFICATIONS

	DESCRIPTION OF MODIFICATION	REASON	ENGINEER APPROVAL?
1.			
2.			

VISITORS

	TIME	NAME	REPRESENTING	REMARKS
1.				
2.				
3.				
4.				
5.				

NOTES

- **Pressure tested 4th section of pipe. 4th section goes from Station 23+75 (valve near church sheet D-4) and makes 2 loops (the 2 "central" loops). Pressure tested at 120 psi from 2:00 to 4:00.**
- **Installed curb stop and curb box on blue polyline in trench at SW end of Gulch Lane near hydrant to see if that line shuts off House 35. Blue polyline shuts off shack. Not sure if black line feeds House 35 or House 31. Curb stop for black line is on opposite side of main from house 35 but supposedly shuts off house 35. Owner doesn't generally get home until 7 pm. Possibility exists that black line feeds both House 31 and House 35 and there is another connection somewhere along black line. Don't know where curb stop is to House 31. House 31 has been hauling water to a cistern. Kent, Ralph, and I agreed to excavate along black poly line to figure out which house it feeds (or both) as we have to get water service to House 31 which currently does not have water and we don't know where curb stop is. Excavated along black poly for about 200 feet or so. It is heading toward House 31 and there is no other connection leading to house 35. At about 5 pm Pat showed up knew where curb stop was to House 31. From excavation we found out black line has 2 curb stops and feeds ONLY house 31. Excavated and backfilled 10 hours. House 31 had water from main the whole time but didn't realize it because it was thought the curb stop near hydrant was for House 35. House 31 now has water. We do not know where service to house 35 is.**

REMARKS – (Include controversial matters, information, instructions, disagreements, or any other miscellaneous remarks):

OVERSIGHT SIGNATURE	DATE	PROJECT MANAGER INITIALS	DATE

CONSTRUCTION DAILY ACTIVITY REPORT

TO: Montana Department of Environmental Quality Remediation Division - Mine Waste Cleanup Bureau Helena, MT Attn: Tom Henderson	REPORT NUMBER **#56**
PROJECT: Sand Coulee, water system replacement	DATE **Tuesday, 11-4-2014**
CONTRACTOR: Boland Construction Great Falls, MT	DEQ CONTRACT NUMBER
HAS ANYTHING DEVELOPED ON THE WORK WHICH MIGHT LEAD TO A CHANGE ORDER OR FINDING OF FACT? ☐ NO ☐ YES	WEATHER **Partly Cloudy/Windy**
HEALTH AND SAFETY Was a Job Safety Meeting held this date? ☐ NO ☐ YES	TEMPERATURE MINIMUM **40** / MAXIMUM **45**

NUMBER OF CONTRACTOR'S EMPLOYEES

SUPERVISORY	OPERATORS	LABORERS	TOTAL
Steve C.	**6**	**7**	**14**

24 HOUR PRECIPITATION: **0**

SUBCONTRACTORS ON SITE

COMPANY NAME	TOTAL EMPLOYEES
1. **Detail Construction – Well House**	**3**
2. **Andre Meter Pits**	**3**
3. **Tri-County Mechanical**	**2**

List the major items of equipment

	units	EQUIPMENT DESCRIPTION	Hours	Comments	
1.	**6**	**Excavators (330C, 320E, 316E, (3) 305E**			
2.	**2**	**Frontend loaders**			
3.	**1**	**Skidsteer**			
4.	**1**	**Soft Dig Vacuum**			
5.	**1**	**Forklift**			
6.	**1**	**Concrete Mixer**			
7.					

Notes:

CONSTRUCTION DAILY ACTIVITY REPORT

WORK PERFORMED TODAY

	LOCATION	BID ITEM NUMBER	DESCRIPTION OF WORK PERFORMED
1.	**Sand Coulee (Jim and Greg's Crew)**		**Hooking services up to main.**
2.	**Sand Coulee Fire Hydrant Locations**		**Installing bollards for 7 fire hydrants.**
3.	**Top of Hill (Tank/Well House)**		**Grading and compacting around tank. Roof and doors on well house were put up. Tri-County started installing fittings in inflow meter manhole.**
4.	**Andre meter pits**		**Installed meter pits on Gulch Lane and Alley.**
5.			

REASON FOR NO WORK: Started raining in the early afternoon. Boland left site about 4:00.

INFORMATION ON PROGRESS OF WORK – (Causes for delays, extent of delays, Plant, materials, etc.)

MATERIALS DELIVERED TO SITE

	DESCRIPTION
1.	
2.	
3.	

NOTE

INSPECTIONS AND TEST (Include comment pertaining to contractors activities)

	TESTS	RESULTS		COMMENT
1.	**NCI Density Testing**			
2.				

SAMPLES COLLECTED

	SAMPLE TYPE	SAMPLE ID	COMMENTS
1.			
2.			

3.			

VERBAL INSTRUCTIONS GIVEN TO CONTRACTOR

	NAMES	INSTRUCTION	REACTION	REMARKS
1.				
2.				
3.				
4.				

NOTES –

DESIGN MODIFICATIONS

	DESCRIPTION OF MODIFICATION	REASON	ENGINEER APPROVAL?
1.			
2.			

VISITORS

	TIME	NAME	REPRESENTING	REMARKS
1.				
2.				
3.				
4.				

NOTES

- **Tri-County looked at fire house plumbing. He will get a cost to Boland. They can probably perform this work after installing manhole fittings.**

REMARKS – (Include controversial matters, information, instructions, disagreements, or any other miscellaneous remarks):

OVERSIGHT SIGNATURE	DATE	PROJECT MANAGER INITIALS	DATE

CONSTRUCTION DAILY ACTIVITY REPORT

TO: Montana Department of Environmental Quality Remediation Division - Mine Waste Cleanup Bureau Helena, MT Attn: Tom Henderson	REPORT NUMBER **#57**
PROJECT: Sand Coulee, water system replacement	DATE **Wednesday, 11-5-2014**
CONTRACTOR: Boland Construction Great Falls, MT	DEQ CONTRACT NUMBER
HAS ANYTHING DEVELOPED ON THE WORK WHICH MIGHT LEAD TO A CHANGE ORDER OR FINDING OF FACT? ☐ NO ☐ YES	WEATHER **Partly Cloudy/Windy**
HEALTH AND SAFETY Was a Job Safety Meeting held this date? ☐ NO ☐ YES	TEMPERATURE MINIMUM **40** MAXIMUM **45**

NUMBER OF CONTRACTOR'S EMPLOYEES

SUPERVISORY	OPERATORS	LABORERS	TOTAL
Steve C.	**6**	**7**	**14**

24 HOUR PRECIPITATION: **0**

SUBCONTRACTORS ON SITE

COMPANY NAME	TOTAL EMPLOYEES
1. **Andre Meter Pits**	**3**
2. **United Electric**	**1**

List the major items of equipment

	units	EQUIPMENT DESCRIPTION	Hours	Comments	
1.	**6**	**Excavators (330C, 320E, 316E, (3) 305E**			
2.	**2**	**Frontend loaders**			
3.	**1**	**Skidsteer**			
4.	**1**	**Soft Dig Vacuum**			
5.	**1**	**Forklift**			
6.	**1**	**Concrete Mixer**			
7.					

Notes:

CONSTRUCTION DAILY ACTIVITY REPORT

WORK PERFORMED TODAY

	LOCATION	BID ITEM NUMBER	DESCRIPTION OF WORK PERFORMED
1.	**Sand Coulee (Jim and Greg's Crew)**		**Hooking services up to main.**
2.	**Sand Coulee Fire Hydrant Locations**		**Installing bollards for 7 fire hydrants.**
3.	**Top of Hill (Tank/Well House)**		**Grading and compacting around tank.**
4.	**Andre meter pits**		**Installed meter pits on Gulch Lane.**
5.			

REASON FOR NO WORK: Started raining in the early afternoon. Boland left site about 4:00.

INFORMATION ON PROGRESS OF WORK – (Causes for delays, extent of delays, Plant, materials, etc.)

MATERIALS DELIVERED TO SITE

	DESCRIPTION
1.	
2.	
3.	

NOTE

INSPECTIONS AND TEST (Include comment pertaining to contractors activities)

	TESTS	RESULTS		COMMENT
1.	**NCI Density Testing**			
2.				

SAMPLES COLLECTED

	SAMPLE TYPE	SAMPLE ID	COMMENTS
1.			
2.			
3.			

VERBAL INSTRUCTIONS GIVEN TO CONTRACTOR

	NAMES	INSTRUCTION	REACTION	REMARKS
1.				
2.				
3.				
4.				

NOTES –

DESIGN MODIFICATIONS

	DESCRIPTION OF MODIFICATION	REASON	ENGINEER APPROVAL?
1.			
2.			

VISITORS

	TIME	NAME	REPRESENTING	REMARKS
1.				
2.				
3.				
4.				

NOTES

- **Bollards were originally planned for 6 fire hydrants. Added bollards to hydant at Rosie's Lane House 40 (intersection of Rosie's Lane and Dahn's Lane)**
- **May add rebar to sidewalk around well house. Ralph is looking into this.**
- **Haven't started exploratory near house 35 at the end of gulch lane yet.**
- **Tri-County Mechanical and Detail Construction not here today.**

REMARKS – (Include controversial matters, information, instructions, disagreements, or any other miscellaneous remarks):

OVERSIGHT SIGNATURE	DATE	PROJECT MANAGER INITIALS	DATE

CONSTRUCTION DAILY ACTIVITY REPORT

TO: Montana Department of Environmental Quality Remediation Division - Mine Waste Cleanup Bureau Helena, MT Attn: Tom Henderson	REPORT NUMBER **#58**
PROJECT: Sand Coulee, water system replacement	DATE **Thursday, 11-6-2014**
CONTRACTOR: Boland Construction Great Falls, MT	DEQ CONTRACT NUMBER
HAS ANYTHING DEVELOPED ON THE WORK WHICH MIGHT LEAD TO A CHANGE ORDER OR FINDING OF FACT? ☐ NO ☐ YES	WEATHER **Sunny**
HEALTH AND SAFETY Was a Job Safety Meeting held this date? ☐ NO ☐ YES	TEMPERATURE MINIMUM **45** / MAXIMUM **50**

NUMBER OF CONTRACTOR'S EMPLOYEES				24 HOUR PRECIPITATION
SUPERVISORY	OPERATORS	LABORERS	TOTAL	**0**
Steve C.	**6**	**7**	**14**	

SUBCONTRACTORS ON SITE

COMPANY NAME	TOTAL EMPLOYEES
1. **Andre Construction – Meter Pits**	**3**
2. **United Electric**	**2**
3. **Tri County Mechanical**	**2**

List the major items of equipment

	units	EQUIPMENT DESCRIPTION	Hours	Comments	
1.	**5**	**Excavators (330C, 320E, 316E, (3) 305E)**			
2.	**2**	**Front end loaders**			
3.	**1**	**Skidsteer**			
4.	**2**	**Soft Dig Vacuum (on site but not in use)**			
5.	**1**	**Forklift**			
6.	**1**	**Concrete Mixer**			
7.					

Notes:

CONSTRUCTION DAILY ACTIVITY REPORT

WORK PERFORMED TODAY

	LOCATION	BID ITEM NUMBER	DESCRIPTION OF WORK PERFORMED
1.	**Sand Coulee (Jim and Greg's Crew)**		**Hooking up service lines to main.**
2.	**Top of Hill (Tank/Well House)**		**Grading and compacting around well house and tank. United Electric is installing wiring inside well house. Tri County Mechanical installed fittings in inflow meter manhole.**
3.	**Andre Meter Pits**		**Installed meter pits on Gulch Lane.**
4.			
5.			

REASON FOR NO WORK:

INFORMATION ON PROGRESS OF WORK – (Causes for delays, extent of delays, Plant, materials, etc.)

MATERIALS DELIVERED TO SITE

	DESCRIPTION
1.	**Dickman delivered crushed base course.**
2.	
3.	

NOTE

INSPECTIONS AND TEST (Include comment pertaining to contractors activities)

	TESTS	RESULTS		COMMENT
1.	**NCI Density Testing**			
2.				

SAMPLES COLLECTED

	SAMPLE TYPE	SAMPLE ID	COMMENTS
1.			
2.			
3.			

CONSTRUCTION DAILY ACTIVITY REPORT

VERBAL INSTRUCTIONS GIVEN TO CONTRACTOR

	NAMES	INSTRUCTION	REACTION	REMARKS
1.				
2.				
3.				
4.				

NOTES –

DESIGN MODIFICATIONS

	DESCRIPTION OF MODIFICATION	REASON	ENGINEER APPROVAL?
1.			
2.			

VISITORS

	TIME	NAME	REPRESENTING	REMARKS
1.				
2.				
3.				
4.				
5.				

NOTES

- **Tracer wires were tested and signal can be traced up to about 2 city blocks.**
- **Need to raise hydrant and valve box next to church.**
- **Kent reported 5 bacteriological tests came back good. The 2 east loops are the only remaining sections for which bacteriological results have not been received.**

REMARKS – (Include controversial matters, information, instructions, disagreements, or any other miscellaneous remarks):

OVERSIGHT SIGNATURE	DATE	PROJECT MANAGER INITIALS	DATE

CONSTRUCTION DAILY ACTIVITY REPORT

TO: Montana Department of Environmental Quality Remediation Division - Mine Waste Cleanup Bureau Helena, MT Attn: Tom Henderson	REPORT NUMBER **#59**
PROJECT: Sand Coulee, water system replacement	DATE **Friday, 11-7-2014**
CONTRACTOR: Boland Construction Great Falls, MT	DEQ CONTRACT NUMBER
HAS ANYTHING DEVELOPED ON THE WORK WHICH MIGHT LEAD TO A CHANGE ORDER OR FINDING OF FACT? ☐ NO ☐ YES	WEATHER **Sunny**
HEALTH AND SAFETY Was a Job Safety Meeting held this date? ☐ NO ☐ YES	TEMPERATURE MINIMUM **45** MAXIMUM **55**

NUMBER OF CONTRACTOR'S EMPLOYEES				24 HOUR PRECIPITATION
SUPERVISORY	OPERATORS	LABORERS	TOTAL	**0**
Steve C.	**6**	**7**	**14**	

SUBCONTRACTORS ON SITE

COMPANY NAME	TOTAL EMPLOYEES
1. **Andre Construction – Meter Pits**	**3**
2. **United Electric**	**2**
3. **Tri County Mechanical**	**2**

List the major items of equipment

	units	EQUIPMENT DESCRIPTION	Hours	Comments	
1.	**5**	**Excavators (330C, 320E, 316E, (3) 305E)**			
2.	**2**	**Front end loaders**			
3.	**1**	**Skidsteer**			
4.	**2**	**Soft Dig Vacuum (on site but not in use)**			
5.	**1**	**Forklift**			
6.	**1**	**Concrete Mixer**			
7.					

Notes:

CONSTRUCTION DAILY ACTIVITY REPORT

WORK PERFORMED TODAY

	LOCATION	BID ITEM NUMBER	DESCRIPTION OF WORK PERFORMED
1.	**Sand Coulee (Jim and Greg's Crew)**		**Hooking up service lines to main.**
2.	**Top of Hill (Tank/Well House)**		**Grading and compacting for well house parking lot. United Electric finished installing wiring in well house.**
3.	**Andre Meter Pits**		**Installed meter pit for House 20 next to church.**
4.			
5.			

REASON FOR NO WORK:

INFORMATION ON PROGRESS OF WORK – (Causes for delays, extent of delays, Plant, materials, etc.)

MATERIALS DELIVERED TO SITE

	DESCRIPTION
1.	
2.	
3.	

NOTE

INSPECTIONS AND TEST (Include comment pertaining to contractors activities)

	TESTS	RESULTS		COMMENT
1.				
2.				

SAMPLES COLLECTED

	SAMPLE TYPE	SAMPLE ID	COMMENTS
1.			
2.			
3.			

VERBAL INSTRUCTIONS GIVEN TO CONTRACTOR

CONSTRUCTION DAILY ACTIVITY REPORT

	NAMES	INSTRUCTION	REACTION	REMARKS
1.				
2.				
3.				
4.				

NOTES –

DESIGN MODIFICATIONS

	DESCRIPTION OF MODIFICATION	REASON	ENGINEER APPROVAL?
1.			
2.			

VISITORS

	TIME	NAME	REPRESENTING	REMARKS
1.				
2.				
3.				
4.				
5.				

NOTES

- **4 meter pits remaining.**
- **Tri County Mechanical installed fittings in PRV manhole.**
- **Core drilled hole in inflow meter manhole for pipe connection. Tri County Mechanical has some piping left in inflow meter manhole.**
- **Kent reported last 2 bacteriological tests (2 east loops) came back good. All pipe has been pressure tested and held pressure at 120 psi. Water samples from all pipe has passed bacteriological tests.**

REMARKS – (Include controversial matters, information, instructions, disagreements, or any other miscellaneous remarks):

OVERSIGHT SIGNATURE	DATE	PROJECT MANAGER INITIALS	DATE

CONSTRUCTION DAILY ACTIVITY REPORT

TO: Montana Department of Environmental Quality Remediation Division - Mine Waste Cleanup Bureau Helena, MT Attn: Tom Henderson	REPORT NUMBER **#60**
PROJECT: Sand Coulee, water system replacement	DATE **Friday, 11-14-2014**
CONTRACTOR: Boland Construction Great Falls, MT	DEQ CONTRACT NUMBER
HAS ANYTHING DEVELOPED ON THE WORK WHICH MIGHT LEAD TO A CHANGE ORDER OR FINDING OF FACT? ☐ NO ☐ YES	WEATHER **Partly Cloudy**
HEALTH AND SAFETY Was a Job Safety Meeting held this date? ☐ NO ☐ YES	TEMPERATURE MINIMUM **-10** MAXIMUM **0**

NUMBER OF CONTRACTOR'S EMPLOYEES

SUPERVISORY	OPERATORS	LABORERS	TOTAL
Steve C.	**6**	**7**	**14**

24 HOUR PRECIPITATION: **0**

SUBCONTRACTORS ON SITE

COMPANY NAME	TOTAL EMPLOYEES
1. **Engineering America - Tank**	**5**

List the major items of equipment

	units	EQUIPMENT DESCRIPTION	Hours	Comments	
1.	**6**	**Excavators (330C, 320E, 316E, (3) 305E)**			
2.	**2**	**Front end loaders**			
3.	**1**	**Skidsteer**			
4.	**2**	**Soft Dig Vacuum (on site but not in use)**			
5.	**1**	**Forklift**			
6.	**1**	**Concrete Mixer**			
7.					

Notes:

CONSTRUCTION DAILY ACTIVITY REPORT

WORK PERFORMED TODAY

	LOCATION	BID ITEM NUMBER	DESCRIPTION OF WORK PERFORMED
1.	**Tank**		**Engineering America Constructed Water tank. Assembled tank roof, gravity vent, and the first 2 sheets of tank circumference. Sealant works in temperatures as low as -75°F according to specification. Sealant came out of tubes okay and was found to be fairly malleable in the field. Showed subcontractors where we wanted access ladder and roof hatches.**
2.			
3.			
4.			
5.			

REASON FOR NO WORK: Boland is not working today due to extremely cold temperatures.

INFORMATION ON PROGRESS OF WORK – (Causes for delays, extent of delays, Plant, materials, etc.)

MATERIALS DELIVERED TO SITE

	DESCRIPTION
1.	
2.	
3.	

NOTE

INSPECTIONS AND TEST (Include comment pertaining to contractors activities)

	TESTS	RESULTS		COMMENT
1.				
2.				

SAMPLES COLLECTED

	SAMPLE TYPE	SAMPLE ID	COMMENTS
1.			
2.			

3.			

VERBAL INSTRUCTIONS GIVEN TO CONTRACTOR

	NAMES	INSTRUCTION	REACTION	REMARKS
1.				
2.				
3.				
4.				

NOTES –

DESIGN MODIFICATIONS

	DESCRIPTION OF MODIFICATION	REASON	ENGINEER APPROVAL?
1.			
2.			

VISITORS

	TIME	NAME	REPRESENTING	REMARKS
1.				
2.				
3.				
4.				
5.				

NOTES

- Boland is not working today due to extremely cold temperatures.

REMARKS – (Include controversial matters, information, instructions, disagreements, or any other miscellaneous remarks):

OVERSIGHT SIGNATURE	DATE	PROJECT MANAGER INITIALS	DATE

CONSTRUCTION DAILY ACTIVITY REPORT

TO: Montana Department of Environmental Quality Remediation Division - Mine Waste Cleanup Bureau Helena, MT Attn: Tom Henderson	REPORT NUMBER **#61**
PROJECT: Sand Coulee, water system replacement	DATE **Saturday 11/15/2014**
CONTRACTOR: Boland Construction Great Falls, MT	DEQ CONTRACT NUMBER
HAS ANYTHING DEVELOPED ON THE WORK WHICH MIGHT LEAD TO A CHANGE ORDER OR FINDING OF FACT? ☐ NO ☐ YES	WEATHER **Sunny**
HEALTH AND SAFETY Was a Job Safety Meeting held this date? ☐ NO ☐ YES	TEMPERATURE MINIMUM **-10** MAXIMUM **0**

NUMBER OF CONTRACTOR'S EMPLOYEES

SUPERVISORY	OPERATORS	LABORERS	TOTAL
Steve C.	**6**	**7**	**14**

24 HOUR PRECIPITATION: **0**

SUBCONTRACTORS ON SITE

COMPANY NAME	TOTAL EMPLOYEES
1. **Engineering America - Tank**	**6**

List the major items of equipment

	units	EQUIPMENT DESCRIPTION	Hours	Comments	
1.	**6**	**Excavators (330C, 320E, 316E, (3) 305E)**			
2.	**2**	**Front end loaders**			
3.	**1**	**Skidsteer**			
4.	**2**	**Soft Dig Vacuum (on site but not in use)**			
5.	**1**	**Forklift**			
6.	**1**	**Concrete Mixer**			
7.					

Notes:

CONSTRUCTION DAILY ACTIVITY REPORT

WORK PERFORMED TODAY

	LOCATION	BID ITEM NUMBER	DESCRIPTION OF WORK PERFORMED
1.	**Tank**		**Engineering America Constructed Water tank. Assembled access ladder, roof manways, manway platforms, and roof walkway and guardrail.**
2.			
3.			
4.			
5.			

REASON FOR NO WORK: Boland is not working today due to extremely cold temperatures.

INFORMATION ON PROGRESS OF WORK – (Causes for delays, extent of delays, Plant, materials, etc.)

MATERIALS DELIVERED TO SITE

	DESCRIPTION
1.	
2.	
3.	

NOTE

INSPECTIONS AND TEST (Include comment pertaining to contractors activities)

	TESTS	RESULTS		COMMENT
1.				
2.				

SAMPLES COLLECTED

	SAMPLE TYPE	SAMPLE ID	COMMENTS
1.			
2.			
3.			

VERBAL INSTRUCTIONS GIVEN TO CONTRACTOR

	NAMES	INSTRUCTION	REACTION	REMARKS

1.				
2.				
3.				
4.				

NOTES –

DESIGN MODIFICATIONS

	DESCRIPTION OF MODIFICATION	REASON	ENGINEER APPROVAL?
1.			
2.			

VISITORS

	TIME	NAME	REPRESENTING	REMARKS
1.				
2.				
3.				
4.				
5.				

NOTES

- Boland is not working today due to extremely cold temperatures.

REMARKS – (Include controversial matters, information, instructions, disagreements, or any other miscellaneous remarks):

OVERSIGHT SIGNATURE	DATE	PROJECT MANAGER INITIALS	DATE

CONSTRUCTION DAILY ACTIVITY REPORT

TO: Montana Department of Environmental Quality Remediation Division - Mine Waste Cleanup Bureau Helena, MT Attn: Tom Henderson	REPORT NUMBER **#62**
PROJECT: Sand Coulee, water system replacement	DATE **Monday 11/17/2014**
CONTRACTOR: Boland Construction Great Falls, MT	DEQ CONTRACT NUMBER
HAS ANYTHING DEVELOPED ON THE WORK WHICH MIGHT LEAD TO A CHANGE ORDER OR FINDING OF FACT? ☐ NO ☐ YES	WEATHER **Sunny**
HEALTH AND SAFETY Was a Job Safety Meeting held this date? ☐ NO ☐ YES	TEMPERATURE MINIMUM **10** MAXIMUM **15**

NUMBER OF CONTRACTOR'S EMPLOYEES				24 HOUR PRECIPITATION
SUPERVISORY	OPERATORS	LABORERS	TOTAL	**0**
Steve C.	**6**	**7**	**14**	

SUBCONTRACTORS ON SITE		
	COMPANY NAME	TOTAL EMPLOYEES
1.	**Engineering America - Tank**	**6**

List the major items of equipment

	units	EQUIPMENT DESCRIPTION	Hours	Comments	
1.	**6**	**Excavators (330C, 320E, 316E, (3) 305E)**			
2.	**2**	**Front end loaders**			
3.	**1**	**Skidsteer**			
4.	**2**	**Soft Dig Vacuum (on site but not in use)**			
5.	**1**	**Forklift**			
6.	**1**	**Concrete Mixer**			
7.					

Notes:

CONSTRUCTION DAILY ACTIVITY REPORT

WORK PERFORMED TODAY

	LOCATION	BID ITEM NUMBER	DESCRIPTION OF WORK PERFORMED
1.	**Tank**		**Engineering America Constructed Water tank. Assembled 3rd ring of shell sheets around tank circumference, attached wind stiffener and overflow pipe.**
2.			
3.			
4.			
5.			

REASON FOR NO WORK: Boland is not working today due to extremely cold temperatures.

INFORMATION ON PROGRESS OF WORK – (Causes for delays, extent of delays, Plant, materials, etc.)

MATERIALS DELIVERED TO SITE

	DESCRIPTION
1.	
2.	
3.	

NOTE

INSPECTIONS AND TEST (Include comment pertaining to contractors activities)

	TESTS	RESULTS		COMMENT
1.				
2.				

SAMPLES COLLECTED

	SAMPLE TYPE	SAMPLE ID	COMMENTS
1.			
2.			
3.			

CONSTRUCTION DAILY ACTIVITY REPORT

VERBAL INSTRUCTIONS GIVEN TO CONTRACTOR

	NAMES	INSTRUCTION	REACTION	REMARKS
1.				
2.				
3.				
4.				

NOTES –

DESIGN MODIFICATIONS

	DESCRIPTION OF MODIFICATION	REASON	ENGINEER APPROVAL?
1.			
2.			

VISITORS

	TIME	NAME	REPRESENTING	REMARKS
1.				
2.				
3.				
4.				
5.				

NOTES

- Boland is not working today due to extremely cold temperatures.

REMARKS – (Include controversial matters, information, instructions, disagreements, or any other miscellaneous remarks):

OVERSIGHT SIGNATURE	DATE	PROJECT MANAGER INITIALS	DATE

CONSTRUCTION DAILY ACTIVITY REPORT

TO: Montana Department of Environmental Quality Remediation Division - Mine Waste Cleanup Bureau Helena, MT Attn: Tom Henderson	REPORT NUMBER **#63**
PROJECT: Sand Coulee, water system replacement	DATE **Tuesday 11/18/2014**
CONTRACTOR: Boland Construction Great Falls, MT	DEQ CONTRACT NUMBER
HAS ANYTHING DEVELOPED ON THE WORK WHICH MIGHT LEAD TO A CHANGE ORDER OR FINDING OF FACT? ☐ NO ☐ YES	WEATHER **Cloudy**
HEALTH AND SAFETY Was a Job Safety Meeting held this date? ☐ NO ☐ YES	TEMPERATURE MINIMUM **20** MAXIMUM **30**

NUMBER OF CONTRACTOR'S EMPLOYEES

SUPERVISORY	OPERATORS	LABORERS	TOTAL
Steve C.	**6**	**7**	**14**

24 HOUR PRECIPITATION: **0**

SUBCONTRACTORS ON SITE

COMPANY NAME	TOTAL EMPLOYEES
1. **Engineering America - Tank**	**5**

List the major items of equipment

	units	EQUIPMENT DESCRIPTION	Hours	Comments	
1.	**6**	**Excavators (330C, 320E, 316E, (3) 305E)**			
2.	**2**	**Front end loaders**			
3.	**1**	**Skidsteer**			
4.	**2**	**Soft Dig Vacuum (on site but not in use)**			
5.	**1**	**Forklift**			
6.	**1**	**Concrete Mixer**			
7.					

Notes:

CONSTRUCTION DAILY ACTIVITY REPORT

WORK PERFORMED TODAY

	LOCATION	BID ITEM NUMBER	DESCRIPTION OF WORK PERFORMED
1.	**Tank**		**Engineering America constructed water tank. Assembled 4th and 5th ring of shell sheets around tank circumference and wind stiffener around 4th shell sheet.**
2.	**Dahn's Alley (Jim's Crew)**		**Connected service lines to main.**
3.	**Below Tank Hill (Greg's Crew)**		**Installed pipe fittings and 45° bend on uphill side of PRV manhole.**
4.	**Tank Hill**		**Drilled hole in inflow meter manhole for pipe which bypasses tank and connects directly to distribution pipe.**
5.			

REASON FOR NO WORK:

INFORMATION ON PROGRESS OF WORK – (Causes for delays, extent of delays, Plant, materials, etc.)

MATERIALS DELIVERED TO SITE

	DESCRIPTION
1.	
2.	
3.	

NOTE

INSPECTIONS AND TEST (Include comment pertaining to contractors activities)

	TESTS	RESULTS		COMMENT
1.				
2.				

SAMPLES COLLECTED

	SAMPLE TYPE	SAMPLE ID	COMMENTS
1.			
2.			
3.			

VERBAL INSTRUCTIONS GIVEN TO CONTRACTOR

CONSTRUCTION DAILY ACTIVITY REPORT

	NAMES	INSTRUCTION	REACTION	REMARKS
1.				
2.				
3.				
4.				

NOTES –

DESIGN MODIFICATIONS

	DESCRIPTION OF MODIFICATION	REASON	ENGINEER APPROVAL?
1.			
2.			

VISITORS

	TIME	NAME	REPRESENTING	REMARKS
1.				
2.				
3.				
4.				
5.				

NOTES

- **monthly meeting with DEQ, Hydrometrics, District, Boland and NCI. See meeting notes. After the meeting we looked at an overflowing well and basement flooding on Gulch Lane near Mary Ann's house.**

REMARKS – (Include controversial matters, information, instructions, disagreements, or any other miscellaneous remarks):

OVERSIGHT SIGNATURE	DATE	PROJECT MANAGER INITIALS	DATE

CONSTRUCTION DAILY ACTIVITY REPORT

TO: Montana Department of Environmental Quality Remediation Division - Mine Waste Cleanup Bureau Helena, MT Attn: Tom Henderson	REPORT NUMBER **#64**
PROJECT: Sand Coulee, water system replacement	DATE **Wednesday 11/19/2014**
CONTRACTOR: Boland Construction Great Falls, MT	DEQ CONTRACT NUMBER
HAS ANYTHING DEVELOPED ON THE WORK WHICH MIGHT LEAD TO A CHANGE ORDER OR FINDING OF FACT? ☐ NO ☐ YES	WEATHER **Partly cloudy**
HEALTH AND SAFETY Was a Job Safety Meeting held this date? ☐ NO ☐ YES	TEMPERATURE MINIMUM **25** MAXIMUM **30**

NUMBER OF CONTRACTOR'S EMPLOYEES				24 HOUR PRECIPITATION
SUPERVISORY	OPERATORS	LABORERS	TOTAL	**0**
Steve C.	**6**	**7**	**14**	

SUBCONTRACTORS ON SITE

COMPANY NAME	TOTAL EMPLOYEES
1. **Engineering America – Tank**	**4**
2. **S&H – metal roofing**	**2**

List the major items of equipment

	units	EQUIPMENT DESCRIPTION	Hours	Comments	
1.	**6**	**Excavators (330C, 320E, 316E, (3) 305E)**			
2.	**2**	**Front end loaders**			
3.	**1**	**Skidsteer**			
4.	**2**	**Soft Dig Vacuum (on site but not in use)**			
5.	**1**	**Forklift**			
6.	**1**	**Concrete Mixer**			
7.					

Notes:

CONSTRUCTION DAILY ACTIVITY REPORT

WORK PERFORMED TODAY

	LOCATION	BID ITEM NUMBER	DESCRIPTION OF WORK PERFORMED
1.	**Tank**		**Engineering America finished construction of water tank. Assembled 6th shell sheet around tank circumference. Finished installing access door, overflow pipe, bottom ladder and cage lock, and cathodic protection. Sealant has to cure for 7-10 days before chlorination/disinfection.**
2.	**Dahn's Alley (Jim's Crew)**		**Connected service lines to main.**
3.	**Below Tank Hill (Greg's Crew)**		**Poured thrust block for vertical 45° bend on uphill side of PRV manhole. Excavated around manhole so top section could be removed and mid section raise installed. Manhole raise section will be here tomorrow.**
4.	**Well House**		**S&H arrived on-site and began construction of metal roof on well house.**
5.			

REASON FOR NO WORK:

INFORMATION ON PROGRESS OF WORK – (Causes for delays, extent of delays, Plant, materials, etc.)

MATERIALS DELIVERED TO SITE

	DESCRIPTION
1.	
2.	
3.	

NOTE

INSPECTIONS AND TEST (Include comment pertaining to contractors activities)

	TESTS	RESULTS		COMMENT
1.				
2.				

SAMPLES COLLECTED

	SAMPLE TYPE	SAMPLE ID	COMMENTS
1.			
2.			
3.			

CONSTRUCTION DAILY ACTIVITY REPORT

VERBAL INSTRUCTIONS GIVEN TO CONTRACTOR

	NAMES	INSTRUCTION	REACTION	REMARKS
1.				
2.				
3.				
4.				

NOTES –

DESIGN MODIFICATIONS

	DESCRIPTION OF MODIFICATION	REASON	ENGINEER APPROVAL?
1.			
2.			

VISITORS

	TIME	NAME	REPRESENTING	REMARKS
1.				
2.				
3.				
4.				
5.				

NOTES

REMARKS – (Include controversial matters, information, instructions, disagreements, or any other miscellaneous remarks):

OVERSIGHT SIGNATURE	DATE	PROJECT MANAGER INITIALS	DATE

CONSTRUCTION DAILY ACTIVITY REPORT

TO: Montana Department of Environmental Quality Remediation Division - Mine Waste Cleanup Bureau Helena, MT Attn: Tom Henderson	REPORT NUMBER **#65**
PROJECT: Sand Coulee, water system replacement	DATE **Thursday 11/20/2014**
CONTRACTOR: Boland Construction Great Falls, MT	DEQ CONTRACT NUMBER
HAS ANYTHING DEVELOPED ON THE WORK WHICH MIGHT LEAD TO A CHANGE ORDER OR FINDING OF FACT? ☐ NO ☐ YES	WEATHER **Partly cloudy**
HEALTH AND SAFETY Was a Job Safety Meeting held this date? ☐ NO ☐ YES	TEMPERATURE MINIMUM **25** MAXIMUM **30**

NUMBER OF CONTRACTOR'S EMPLOYEES				24 HOUR PRECIPITATION
SUPERVISORY	OPERATORS	LABORERS	TOTAL	**0**
Steve C.	**6**	**7**	**14**	

SUBCONTRACTORS ON SITE

COMPANY NAME	TOTAL EMPLOYEES
1. **Tri – County Mechanical**	**2**
2. **S&H – metal roofing**	**2**

List the major items of equipment

	units	EQUIPMENT DESCRIPTION	Hours	Comments	
1.	**6**	**Excavators (330C, 320E, 316E, (3) 305E)**			
2.	**2**	**Front end loaders**			
3.	**1**	**Skidsteer**			
4.	**2**	**Soft Dig Vacuum (on site but not in use)**			
5.	**1**	**Forklift**			
6.	**1**	**Concrete Mixer**			
7.					

Notes:

CONSTRUCTION DAILY ACTIVITY REPORT

WORK PERFORMED TODAY

	LOCATION	BID ITEM NUMBER	DESCRIPTION OF WORK PERFORMED
1.	**Tri-County Mechanical**		**Finished fittings in both manholes.**
2.	**Dahn's Alley**		**Connected service lines to main.**
3.	**Below Tank Hill**		**Installed PRV manhole raise. Need to raise valve boxes next to PRV manhole also. Installed insulation and backfilled around PRV manhole.**
4.	**Well House**		**S&H continued putting up metal roof on well house.**
5.	**Fire Hall**		**Boland installed new piping from outside fire hall into building.**

REASON FOR NO WORK:

INFORMATION ON PROGRESS OF WORK – (Causes for delays, extent of delays, Plant, materials, etc.)

MATERIALS DELIVERED TO SITE

	DESCRIPTION
1.	
2.	
3.	

NOTE

INSPECTIONS AND TEST (Include comment pertaining to contractors activities)

	TESTS	RESULTS		COMMENT
1.				
2.				

SAMPLES COLLECTED

	SAMPLE TYPE	SAMPLE ID	COMMENTS
1.			
2.			
3.			

VERBAL INSTRUCTIONS GIVEN TO CONTRACTOR

	NAMES	INSTRUCTION	REACTION	REMARKS
1.				

2.				
3.				
4.				

NOTES –

DESIGN MODIFICATIONS

	DESCRIPTION OF MODIFICATION	REASON	ENGINEER APPROVAL?
1.			
2.			

VISITORS

	TIME	NAME	REPRESENTING	REMARKS
1.	**11:00**	**Ralph, Idaho**	**NCI**	
2.				
3				
4				
5				

NOTES

- Meyers came out and talked to me Thursday afternoon. He said he does not like the fire hydrant location next to his house. He says they used to park there and it also might be easily backed into when he is pulling out of his garage.

- Groundwater is infiltrating the PRV manhole through the sump drain. We pumped water out of the sump drain and used a soft vac to remove about 2' gravel from the drain. We then poured hydraulic cement into the drain to see if it would plug the drain. This seemed to create a partial seal but a couple hours later the drain had about 4-6" of water in it. We will continue to monitor this, measure how much it is leaking, and if needed try to create a better seal with additional hydraulic cement or grout. We will no longer need to grout the bottom of the manhole so that it slopes to the drain.

- Rob with United Electric is confirming the order for transducers and the pressure switch for the manholes and the wells with Healy-Ruff.

- Tri–County Mechanical finished piping in both manholes. (Still need pressure switch in inflow meter manhole installed – may need air vacuum valve as well?)

- Metal roof is constructed of 24 gauge steel. The soffit is vented on sides but not vented on gable ends. S&H anchored J bar directly to brick. Soffit slides into J bar and is screwed into 2x8 header.

- Operator got pulled off grading at top of hill but informed me he was not finished with grading and intends to create drainage path on north side of well house as requested.

REMARKS – (Include controversial matters, information, instructions, disagreements, or any other miscellaneous remarks):

OVERSIGHT SIGNATURE	DATE	PROJECT MANAGER INITIALS	DATE

CONSTRUCTION DAILY ACTIVITY REPORT

TO: Montana Department of Environmental Quality Remediation Division - Mine Waste Cleanup Bureau Helena, MT Attn: Tom Henderson	REPORT NUMBER **#66**
PROJECT: Sand Coulee, water system replacement	DATE **Friday 11/21/2014**
CONTRACTOR: Boland Construction Great Falls, MT	DEQ CONTRACT NUMBER
HAS ANYTHING DEVELOPED ON THE WORK WHICH MIGHT LEAD TO A CHANGE ORDER OR FINDING OF FACT? ☐ NO ☐ YES	WEATHER **Partly cloudy**
HEALTH AND SAFETY Was a Job Safety Meeting held this date? ☐ NO ☐ YES	TEMPERATURE MINIMUM **25** MAXIMUM **30**

NUMBER OF CONTRACTOR'S EMPLOYEES				24 HOUR PRECIPITATION
SUPERVISORY	OPERATORS	LABORERS	TOTAL	**0**
Steve C.	**6**	**7**	**14**	

SUBCONTRACTORS ON SITE

COMPANY NAME	TOTAL EMPLOYEES
1.	

List the major items of equipment

	units	EQUIPMENT DESCRIPTION	Hours	Comments	
1.	**6**	**Excavators (330C, 320E, 316E, (3) 305E)**			
2.	**2**	**Front end loaders**			
3.	**1**	**Skidsteer**			
4.	**2**	**Soft Dig Vacuum (on site but not in use)**			
5.	**1**	**Forklift**			
6.	**1**	**Concrete Mixer**			
7.					

Notes:

CONSTRUCTION DAILY ACTIVITY REPORT

WORK PERFORMED TODAY			
	LOCATION	BID ITEM NUMBER	DESCRIPTION OF WORK PERFORMED
1.			
2.	**Dahn's Alley/ Dahn's Lane/Fortune Lane**		**Connecting service lines to main and installing new service lines to homes.**
3.	**Below Tank Hill**		**Backfilled around PRV manhole.**
4.			
5.			

REASON FOR NO WORK:

INFORMATION ON PROGRESS OF WORK – (Causes for delays, extent of delays, Plant, materials, etc.)

MATERIALS DELIVERED TO SITE

	DESCRIPTION
1.	
2.	
3.	

NOTE

INSPECTIONS AND TEST (Include comment pertaining to contractors activities)

	TESTS	RESULTS		COMMENT
1.				
2.				

SAMPLES COLLECTED

	SAMPLE TYPE	SAMPLE ID	COMMENTS
1.			
2.			
3.			

VERBAL INSTRUCTIONS GIVEN TO CONTRACTOR

	NAMES	INSTRUCTION	REACTION	REMARKS
1.				
2.				

3.				
4.				

NOTES –

DESIGN MODIFICATIONS

	DESCRIPTION OF MODIFICATION	REASON	ENGINEER APPROVAL?
1.			
2.			

VISITORS

	TIME	NAME	REPRESENTING	REMARKS
1.				
2.				
3				
4				
5				

NOTES

- **We need to remove bollard on East Hunter at House 542. It is under their chain link fence.**
- **Tri-County Mechanical worked on piping inside the fire hall.**
- **The PRV sump drain had 12" of water and there is 16" from the top of the drain to water surface.**
- **Backfilled pipe outside of fire hall.**

REMARKS – (Include controversial matters, information, instructions, disagreements, or any other miscellaneous remarks):

OVERSIGHT SIGNATURE	DATE	PROJECT MANAGER INITIALS	DATE

CONSTRUCTION DAILY ACTIVITY REPORT

TO: Montana Department of Environmental Quality Remediation Division - Mine Waste Cleanup Bureau Helena, MT Attn: Tom Henderson	REPORT NUMBER **#67**
PROJECT: Sand Coulee, water system replacement	DATE **Monday 11/24/2014**
CONTRACTOR: Boland Construction Great Falls, MT	DEQ CONTRACT NUMBER
HAS ANYTHING DEVELOPED ON THE WORK WHICH MIGHT LEAD TO A CHANGE ORDER OR FINDING OF FACT? ☐ NO ☐ YES	WEATHER **cloudy**
HEALTH AND SAFETY Was a Job Safety Meeting held this date? ☐ NO ☐ YES	TEMPERATURE MINIMUM **25** MAXIMUM **30**

NUMBER OF CONTRACTOR'S EMPLOYEES

SUPERVISORY	OPERATORS	LABORERS	TOTAL
Steve C.	**6**	**7**	**14**

24 HOUR PRECIPITATION: **0**

SUBCONTRACTORS ON SITE

COMPANY NAME	TOTAL EMPLOYEES
1. **S&H – Metal Roofing**	**2**

List the major items of equipment

	units	EQUIPMENT DESCRIPTION	Hours	Comments	
1.	**6**	**Excavators (330C, 320E, 316E, (3) 305E)**			
2.	**2**	**Front end loaders**			
3.	**1**	**Skidsteer**			
4.	**2**	**Soft Dig Vacuum (on site but not in use)**			
5.	**1**	**Forklift**			
6.	**1**	**Concrete Mixer**			
7.					

Notes:

CONSTRUCTION DAILY ACTIVITY REPORT

WORK PERFORMED TODAY

	LOCATION	BID ITEM NUMBER	DESCRIPTION OF WORK PERFORMED
1.			
2.	**Dahn's Alley/ Dahn's Lane/Fortune Lane**		**Connecting service lines to main and installing new service lines to homes.**
3.	**Well House**		**S&H continued metal roof construction.**
4.			
5.			

REASON FOR NO WORK:

INFORMATION ON PROGRESS OF WORK – (Causes for delays, extent of delays, Plant, materials, etc.)

MATERIALS DELIVERED TO SITE

	DESCRIPTION
1.	
2.	
3.	

NOTE

INSPECTIONS AND TEST (Include comment pertaining to contractors activities)

	TESTS	RESULTS		COMMENT
1.	**NCI Density Testing**			
2.				

SAMPLES COLLECTED

	SAMPLE TYPE	SAMPLE ID	COMMENTS
1.			
2.			
3.			

VERBAL INSTRUCTIONS GIVEN TO CONTRACTOR

	NAMES	INSTRUCTION	REACTION	REMARKS
1.				
2.				

3.				
4.				

NOTES –

DESIGN MODIFICATIONS

	DESCRIPTION OF MODIFICATION	REASON	ENGINEER APPROVAL?
1.			
2.			

VISITORS

	TIME	NAME	REPRESENTING	REMARKS
1.				
2.				
3				
4				
5				

NOTES

- Tri-County Mechanical finished piping in fire hall building.

REMARKS – (Include controversial matters, information, instructions, disagreements, or any other miscellaneous remarks):

OVERSIGHT SIGNATURE	DATE	PROJECT MANAGER INITIALS	DATE

CONSTRUCTION DAILY ACTIVITY REPORT

TO: Montana Department of Environmental Quality Remediation Division - Mine Waste Cleanup Bureau Helena, MT Attn: Tom Henderson	REPORT NUMBER **#68**
PROJECT: Sand Coulee, water system replacement	DATE **Tuesday 11/25/2014**
CONTRACTOR: Boland Construction Great Falls, MT	DEQ CONTRACT NUMBER
HAS ANYTHING DEVELOPED ON THE WORK WHICH MIGHT LEAD TO A CHANGE ORDER OR FINDING OF FACT? ☐ NO ☐ YES	WEATHER **Cloudy/snowing**
HEALTH AND SAFETY Was a Job Safety Meeting held this date? ☐ NO ☐ YES	TEMPERATURE MINIMUM **25** / MAXIMUM **30**

NUMBER OF CONTRACTOR'S EMPLOYEES

SUPERVISORY	OPERATORS	LABORERS	TOTAL
Steve C.	**6**	**7**	**14**

24 HOUR PRECIPITATION: **0**

SUBCONTRACTORS ON SITE

COMPANY NAME	TOTAL EMPLOYEES
1. **S&H – Metal Roofing**	**2**

List the major items of equipment

	units	EQUIPMENT DESCRIPTION	Hours	Comments	
1.	**6**	**Excavators (330C, 320E, 316E, (3) 305E)**			
2.	**2**	**Front end loaders**			
3.	**1**	**Skidsteer**			
4.	**2**	**Soft Dig Vacuum (on site but not in use)**			
5.	**1**	**Forklift**			
6.	**1**	**Concrete Mixer**			
7.					

Notes:

CONSTRUCTION DAILY ACTIVITY REPORT

WORK PERFORMED TODAY

	LOCATION	BID ITEM NUMBER	DESCRIPTION OF WORK PERFORMED
1.			
2.	**Dahn's Alley/ Dahn's Lane/Fortune Lane**		**Connecting service lines to main and installing new service lines to homes.**
3.	**Well House**		**Finished metal roof construction.**
4.			
5.			

REASON FOR NO WORK: Contractor left at about 1:30 due to snow.

INFORMATION ON PROGRESS OF WORK – (Causes for delays, extent of delays, Plant, materials, etc.)

MATERIALS DELIVERED TO SITE

	DESCRIPTION
1.	
2.	
3.	

NOTE

INSPECTIONS AND TEST (Include comment pertaining to contractors activities)

	TESTS	RESULTS		COMMENT
1.				
2.				

SAMPLES COLLECTED

	SAMPLE TYPE	SAMPLE ID	COMMENTS
1.			
2.			
3.			

VERBAL INSTRUCTIONS GIVEN TO CONTRACTOR

	NAMES	INSTRUCTION	REACTION	REMARKS
1.				
2.				

3.				
4.				

NOTES –

DESIGN MODIFICATIONS

	DESCRIPTION OF MODIFICATION	REASON	ENGINEER APPROVAL?
1.			
2.			

VISITORS

	TIME	NAME	REPRESENTING	REMARKS
1.				
2.				
3				
4				
5				

NOTES

- Contractor left at about 1:30 due to snow.

REMARKS – (Include controversial matters, information, instructions, disagreements, or any other miscellaneous remarks):

OVERSIGHT SIGNATURE	DATE	PROJECT MANAGER INITIALS	DATE

CONSTRUCTION DAILY ACTIVITY REPORT

TO: Montana Department of Environmental Quality Remediation Division - Mine Waste Cleanup Bureau Helena, MT Attn: Tom Henderson	REPORT NUMBER **#69**
PROJECT: Sand Coulee, water system replacement	DATE **Monday, 4-6-2015**
CONTRACTOR: Boland Construction Great Falls, MT	DEQ CONTRACT NUMBER
HAS ANYTHING DEVELOPED ON THE WORK WHICH MIGHT LEAD TO A CHANGE ORDER OR FINDING OF FACT? ☐ NO ☐ YES	WEATHER **Partly Cloudy**
HEALTH AND SAFETY Was a Job Safety Meeting held this date? ☐ NO ☐ YES	TEMPERATURE MINIMUM **35** MAXIMUM **45**

NUMBER OF CONTRACTOR'S EMPLOYEES				24 HOUR PRECIPITATION
SUPERVISORY	OPERATORS	LABORERS	TOTAL	**0**
Steve C.	**5**	**7**	**12**	

SUBCONTRACTORS ON SITE

COMPANY NAME	TOTAL EMPLOYEES
1.	
2.	

List the major items of equipment

	units	EQUIPMENT DESCRIPTION	Hours	Comments	
1.	**3**	**Excavators**			
2.	**2**	**Mini Excavators**			
3.	**1**	**Frontend loader**			
4.	**2**	**Skidsteers**			
5.	**2**	**Soft Dig Vacuum**			
6.	**1**	**Concrete Mixer**			
7.					

Notes:

CONSTRUCTION DAILY ACTIVITY REPORT

WORK PERFORMED TODAY

	LOCATION	BID ITEM NUMBER	DESCRIPTION OF WORK PERFORMED
1.	**Top of Hill**		**Installed tank bypass piping, from flowmeter manhole to distribution line. Installed thrust block at 8" x 4" tee. Thrust blocks installed for pipe penetrations through manhole. Used iron megalug and concrete encasement outside of manhole, and sealed with non-shrink grout on interior. Water stop used around pipe.**
2.	**Hillside**		**Station 7+45 (PRV manhole) to 6+20. Installed flowable fill trench plug at about station 7+25 (30 feet uphill from PRV manhole). Large rock encountered at Station 6+50.**
3.			
4.			
5.			

REASON FOR NO WORK:

INFORMATION ON PROGRESS OF WORK – (Causes for delays, extent of delays, Plant, materials, etc.)

MATERIALS DELIVERED TO SITE

	DESCRIPTION
1.	**Dickman delivered pipe bedding**
2.	
3.	

NOTE

INSPECTIONS AND TEST (Include comment pertaining to contractors activities)

	TESTS	RESULTS		COMMENT
1.	**NCI Density Testing**			
2.				

SAMPLES COLLECTED

	SAMPLE TYPE	SAMPLE ID	COMMENTS
1.			

2.			
3.			

VERBAL INSTRUCTIONS GIVEN TO CONTRACTOR

	NAMES	INSTRUCTION	REACTION	REMARKS
1.				
2.				
3.				
4.				

NOTES –

DESIGN MODIFICATIONS

	DESCRIPTION OF MODIFICATION	REASON	ENGINEER APPROVAL?
1.			
2.			

VISITORS

	TIME	NAME	REPRESENTING	REMARKS
1.				
2.				
3.				
4.				
5.				

NOTES

- **There is about 3″ of water in the bottom of PRV manhole.**
-

REMARKS – (Include controversial matters, information, instructions, disagreements, or any other miscellaneous remarks):

OVERSIGHT SIGNATURE	DATE	PROJECT MANAGER INITIALS	DATE

CONSTRUCTION DAILY ACTIVITY REPORT

TO: Montana Department of Environmental Quality Remediation Division - Mine Waste Cleanup Bureau Helena, MT Attn: Tom Henderson	REPORT NUMBER **#70**
PROJECT: Sand Coulee, water system replacement	DATE **Tuesday, 4-7-2015**
CONTRACTOR: Boland Construction Great Falls, MT	DEQ CONTRACT NUMBER
HAS ANYTHING DEVELOPED ON THE WORK WHICH MIGHT LEAD TO A CHANGE ORDER OR FINDING OF FACT? ☐ NO ☐ YES	WEATHER **Sunny**
HEALTH AND SAFETY Was a Job Safety Meeting held this date? ☐ NO ☐ YES	TEMPERATURE MINIMUM **35** / MAXIMUM **50**

NUMBER OF CONTRACTOR'S EMPLOYEES				24 HOUR PRECIPITATION
SUPERVISORY	OPERATORS	LABORERS	TOTAL	**0**
Steve C.	**5**	**7**	**12**	

SUBCONTRACTORS ON SITE

COMPANY NAME	TOTAL EMPLOYEES
1.	
2.	

List the major items of equipment

	units	EQUIPMENT DESCRIPTION	Hours	Comments	
1.	**3**	**Excavators**			
2.	**2**	**Mini Excavators**			
3.	**1**	**Frontend loader**			
4.	**2**	**Skidsteers**			
5.	**2**	**Soft Dig Vacuum**			
6.	**1**	**Concrete Mixer**			
7.					

Notes:

CONSTRUCTION DAILY ACTIVITY REPORT

WORK PERFORMED TODAY

	LOCATION	BID ITEM NUMBER	DESCRIPTION OF WORK PERFORMED
1.	**Service Lines/Miners Lane**		**House 75 and 85 on Miners Lane. Installed service lines from new main to meter pits.**
2.	**Hillside**		**Station 6+20 to 5+00.**
3.			
4.			
5.			

REASON FOR NO WORK:

INFORMATION ON PROGRESS OF WORK – (Causes for delays, extent of delays, Plant, materials, etc.)

MATERIALS DELIVERED TO SITE

	DESCRIPTION
1.	**Dickman delivered pipe bedding**
2.	
3.	

NOTE

INSPECTIONS AND TEST (Include comment pertaining to contractors activities)

	TESTS	RESULTS		COMMENT
1.	**NCI Density Testing**			
2.				

SAMPLES COLLECTED

	SAMPLE TYPE	SAMPLE ID	COMMENTS
1.			
2.			
3.			

VERBAL INSTRUCTIONS GIVEN TO CONTRACTOR

	NAMES	INSTRUCTION	REACTION	REMARKS

1.				
2.				
3.				
4.				

NOTES –

DESIGN MODIFICATIONS

	DESCRIPTION OF MODIFICATION	REASON	ENGINEER APPROVAL?
1.			
2.			

VISITORS

	TIME	NAME	REPRESENTING	REMARKS
1.				
2.				
3.				
4.				
5.				

NOTES

- **Weekly meeting. See meeting minute notes.**

REMARKS – (Include controversial matters, information, instructions, disagreements, or any other miscellaneous remarks):

OVERSIGHT SIGNATURE	DATE	PROJECT MANAGER INITIALS	DATE

CONSTRUCTION DAILY ACTIVITY REPORT

TO: Montana Department of Environmental Quality Remediation Division - Mine Waste Cleanup Bureau Helena, MT Attn: Tom Henderson	REPORT NUMBER **#71**
PROJECT: Sand Coulee, water system replacement	DATE **Wednesday, 4-8-2015**
CONTRACTOR: Boland Construction Great Falls, MT	DEQ CONTRACT NUMBER
HAS ANYTHING DEVELOPED ON THE WORK WHICH MIGHT LEAD TO A CHANGE ORDER OR FINDING OF FACT? ☐ NO ☐ YES	WEATHER **Sunny**
HEALTH AND SAFETY Was a Job Safety Meeting held this date? ☐ NO ☐ YES	TEMPERATURE MINIMUM **45** / MAXIMUM **55**

NUMBER OF CONTRACTOR'S EMPLOYEES				24 HOUR PRECIPITATION
SUPERVISORY	OPERATORS	LABORERS	TOTAL	**0**
Steve C.	**5**	**7**	**12**	

SUBCONTRACTORS ON SITE

COMPANY NAME	TOTAL EMPLOYEES
1.	
2.	

List the major items of equipment

	units	EQUIPMENT DESCRIPTION	Hours	Comments	
1.	**3**	**Excavators**			
2.	**2**	**Mini Excavators**			
3.	**1**	**Frontend loader**			
4.	**2**	**Skidsteers**			
5.	**2**	**Soft Dig Vacuum**			
6.	**1**	**Concrete Mixer**			
7.					

Notes:

CONSTRUCTION DAILY ACTIVITY REPORT

WORK PERFORMED TODAY

	LOCATION	BID ITEM NUMBER	DESCRIPTION OF WORK PERFORMED
1.	**Service Lines/Miners Lane**		**House 75 and 85 on Miners Lane. Finished service lines from new main to meter pits. Broke old main, repaired.**
2.	**Hillside**		**Station 5+00 to 4+00. Installed flowable fill trench plug at Station 4+30. (8 cu yd.)**
3.			
4.			
5.			

REASON FOR NO WORK:

INFORMATION ON PROGRESS OF WORK – (Causes for delays, extent of delays, Plant, materials, etc.)

MATERIALS DELIVERED TO SITE

	DESCRIPTION
1.	**Dickman delivered pipe bedding**
2.	
3.	

NOTE

INSPECTIONS AND TEST (Include comment pertaining to contractors activities)

	TESTS	RESULTS		COMMENT
1.	**NCI Density Testing**			
2.				

SAMPLES COLLECTED

	SAMPLE TYPE	SAMPLE ID	COMMENTS
1.			
2.			
3.			

VERBAL INSTRUCTIONS GIVEN TO CONTRACTOR

CONSTRUCTION DAILY ACTIVITY REPORT

	NAMES	INSTRUCTION	REACTION	REMARKS
1.				
2.				
3.				
4.				

NOTES –

DESIGN MODIFICATIONS

	DESCRIPTION OF MODIFICATION	REASON	ENGINEER APPROVAL?
1.			
2.			

VISITORS

	TIME	NAME	REPRESENTING	REMARKS
1.				
2.				
3.				
4.				
5.				

NOTES

- **Jake and Ralph on site 10:30. Checking electrical at well house.**

REMARKS – (Include controversial matters, information, instructions, disagreements, or any other miscellaneous remarks):

OVERSIGHT SIGNATURE	DATE	PROJECT MANAGER INITIALS	DATE

CONSTRUCTION DAILY ACTIVITY REPORT

TO: Montana Department of Environmental Quality Remediation Division - Mine Waste Cleanup Bureau Helena, MT Attn: Tom Henderson	REPORT NUMBER **#72**
PROJECT: Sand Coulee, water system replacement	DATE **Thursday, 4-9-2015**
CONTRACTOR: Boland Construction Great Falls, MT	DEQ CONTRACT NUMBER
HAS ANYTHING DEVELOPED ON THE WORK WHICH MIGHT LEAD TO A CHANGE ORDER OR FINDING OF FACT? ☐ NO ☐ YES	WEATHER **Sunny**
HEALTH AND SAFETY Was a Job Safety Meeting held this date? ☐ NO ☐ YES	TEMPERATURE MINIMUM **50** MAXIMUM **55**

NUMBER OF CONTRACTOR'S EMPLOYEES

SUPERVISORY	OPERATORS	LABORERS	TOTAL
Steve C.	**5**	**7**	**12**

24 HOUR PRECIPITATION: **0**

SUBCONTRACTORS ON SITE

COMPANY NAME	TOTAL EMPLOYEES
1.	
2.	

List the major items of equipment

	units	EQUIPMENT DESCRIPTION	Hours	Comments	
1.	**3**	**Excavators**			
2.	**2**	**Mini Excavators**			
3.	**1**	**Frontend loader**			
4.	**2**	**Skidsteers**			
5.	**2**	**Soft Dig Vacuum**			
6.	**1**	**Concrete Mixer**			
7.					

Notes:

CONSTRUCTION DAILY ACTIVITY REPORT

WORK PERFORMED TODAY			
	LOCATION	BID ITEM NUMBER	DESCRIPTION OF WORK PERFORMED
1.	**Service Lines**		**House 110 Fortune Lane.**
2.	**Hillside**		**Station 4+00 to 2+50 (reached top of hill). Using soft vac to find new buried electrical and old buried electrical and water to old tank.**
3.			
4.			
5.			

REASON FOR NO WORK:

INFORMATION ON PROGRESS OF WORK – (Causes for delays, extent of delays, Plant, materials, etc.)

MATERIALS DELIVERED TO SITE	
	DESCRIPTION
1.	**Dickman delivered pipe bedding**
2.	
3.	

NOTE

INSPECTIONS AND TEST (Include comment pertaining to contractors activities)

	TESTS	RESULTS		COMMENT
1.	**NCI Density Testing**			
2.				

SAMPLES COLLECTED

	SAMPLE TYPE	SAMPLE ID	COMMENTS
1.			
2.			
3.			

VERBAL INSTRUCTIONS GIVEN TO CONTRACTOR				
	NAMES	INSTRUCTION	REACTION	REMARKS

1.				
2.				
3.				
4.				

NOTES –

DESIGN MODIFICATIONS

	DESCRIPTION OF MODIFICATION	REASON	ENGINEER APPROVAL?
1.			
2.			

VISITORS

	TIME	NAME	REPRESENTING	REMARKS
1.				
2.				
3.				
4.				
5.				

NOTES

-

REMARKS – (Include controversial matters, information, instructions, disagreements, or any other miscellaneous remarks):

OVERSIGHT SIGNATURE	DATE	PROJECT MANAGER INITIALS	DATE

CONSTRUCTION DAILY ACTIVITY REPORT

TO: Montana Department of Environmental Quality Remediation Division - Mine Waste Cleanup Bureau Helena, MT Attn: Tom Henderson	REPORT NUMBER **#73**
PROJECT: Sand Coulee, water system replacement	DATE **Friday, 4-10-2015**
CONTRACTOR: Boland Construction Great Falls, MT	DEQ CONTRACT NUMBER
HAS ANYTHING DEVELOPED ON THE WORK WHICH MIGHT LEAD TO A CHANGE ORDER OR FINDING OF FACT? ☐ NO ☐ YES	WEATHER **Sunny**
HEALTH AND SAFETY Was a Job Safety Meeting held this date? ☐ NO ☐ YES	TEMPERATURE MINIMUM **50** / MAXIMUM **55**

NUMBER OF CONTRACTOR'S EMPLOYEES				24 HOUR PRECIPITATION
SUPERVISORY	OPERATORS	LABORERS	TOTAL	**0**
Steve C.	**5**	**7**	**12**	

SUBCONTRACTORS ON SITE

COMPANY NAME	TOTAL EMPLOYEES
1.	
2.	

List the major items of equipment

	units	EQUIPMENT DESCRIPTION	Hours	Comments	
1.	**3**	**Excavators**			
2.	**2**	**Mini Excavators**			
3.	**1**	**Frontend loader**			
4.	**2**	**Skidsteers**			
5.	**2**	**Soft Dig Vacuum**			
6.	**1**	**Concrete Mixer**			
7.					

Notes:

CONSTRUCTION DAILY ACTIVITY REPORT

WORK PERFORMED TODAY

	LOCATION	BID ITEM NUMBER	DESCRIPTION OF WORK PERFORMED
1.	**Service Lines**		**House 63 Sheet O-1.**
2.	**Hillside**		**Station 2+50 to 1+00. Tied into new storage tank. Broke old water line from well house to old water tank. Repaired old water line.**
3.			
4.			
5.			

REASON FOR NO WORK:

INFORMATION ON PROGRESS OF WORK – (Causes for delays, extent of delays, Plant, materials, etc.)

MATERIALS DELIVERED TO SITE

	DESCRIPTION
1.	**Dickman delivered pipe bedding**
2.	
3.	

NOTE

INSPECTIONS AND TEST (Include comment pertaining to contractors activities)

	TESTS	RESULTS		COMMENT
1.	**NCI Density Testing**			
2.				

SAMPLES COLLECTED

	SAMPLE TYPE	SAMPLE ID	COMMENTS
1.			
2.			
3.			

VERBAL INSTRUCTIONS GIVEN TO CONTRACTOR

	NAMES	INSTRUCTION	REACTION	REMARKS

1.				
2.				
3.				
4.				

NOTES –

DESIGN MODIFICATIONS

	DESCRIPTION OF MODIFICATION	REASON	ENGINEER APPROVAL?
1.			
2.			

VISITORS

	TIME	NAME	REPRESENTING	REMARKS
1.				
2.				
3.				
4.				
5.				

NOTES

-

REMARKS – (Include controversial matters, information, instructions, disagreements, or any other miscellaneous remarks):

OVERSIGHT SIGNATURE	DATE	PROJECT MANAGER INITIALS	DATE

CONSTRUCTION DAILY ACTIVITY REPORT

TO: Montana Department of Environmental Quality Remediation Division - Mine Waste Cleanup Bureau Helena, MT Attn: Tom Henderson	REPORT NUMBER **#74**
PROJECT: Sand Coulee, water system replacement	DATE **Monday, 4-13-2015**
CONTRACTOR: Boland Construction Great Falls, MT	DEQ CONTRACT NUMBER
HAS ANYTHING DEVELOPED ON THE WORK WHICH MIGHT LEAD TO A CHANGE ORDER OR FINDING OF FACT? ☐ NO ☐ YES	WEATHER **Sunny**
HEALTH AND SAFETY Was a Job Safety Meeting held this date? ☐ NO ☐ YES	TEMPERATURE MINIMUM **50** MAXIMUM **55**

NUMBER OF CONTRACTOR'S EMPLOYEES				24 HOUR PRECIPITATION
SUPERVISORY	OPERATORS	LABORERS	TOTAL	**0**
Steve C.	**5**	**7**	**12**	

SUBCONTRACTORS ON SITE	
COMPANY NAME	TOTAL EMPLOYEES
1. **United Electric**	**2**
2.	

List the major items of equipment

	units	EQUIPMENT DESCRIPTION	Hours	Comments	
1.	**3**	**Excavators**			
2.	**2**	**Mini Excavators**			
3.	**1**	**Frontend loader**			
4.	**2**	**Skidsteers**			
5.	**2**	**Soft Dig Vacuum**			
6.	**1**	**Concrete Mixer**			
7.					

Notes:

CONSTRUCTION DAILY ACTIVITY REPORT

WORK PERFORMED TODAY

	LOCATION	BID ITEM NUMBER	DESCRIPTION OF WORK PERFORMED
1.	**Service Lines**		**House 55 by tank hill.**
2.	**Hillside**		**Tied distribution line into new storage tank, installed tee and (2) 45 degree bends and test tap. Started laying pipe from storage tank to well. Installed 6"x 3" tee connection. Will connect new main to 3" line from well #5 with saddle pipe fitting and keep 3" line live to old water tank until we are ready to discontinue use of old tank.**
3.	**United Electric**		**Well Building.**
4.			
5.			

REASON FOR NO WORK:

INFORMATION ON PROGRESS OF WORK – (Causes for delays, extent of delays, Plant, materials, etc.)

MATERIALS DELIVERED TO SITE

	DESCRIPTION
1.	
2.	
3.	

NOTE

INSPECTIONS AND TEST (Include comment pertaining to contractors activities)

	TESTS	RESULTS		COMMENT
1.	**NCI Density Testing**			
2.				

SAMPLES COLLECTED

	SAMPLE TYPE	SAMPLE ID	COMMENTS
1.			
2.			
3.			

CONSTRUCTION DAILY ACTIVITY REPORT

VERBAL INSTRUCTIONS GIVEN TO CONTRACTOR

	NAMES	INSTRUCTION	REACTION	REMARKS
1.				
2.				
3.				
4.				

NOTES –

DESIGN MODIFICATIONS

	DESCRIPTION OF MODIFICATION	REASON	ENGINEER APPROVAL?
1.			
2.			

VISITORS

	TIME	NAME	REPRESENTING	REMARKS
1.				
2.				
3.				
4.				
5.				

NOTES

-

REMARKS – (Include controversial matters, information, instructions, disagreements, or any other miscellaneous remarks):

OVERSIGHT SIGNATURE	DATE	PROJECT MANAGER INITIALS	DATE

CONSTRUCTION DAILY ACTIVITY REPORT

TO: Montana Department of Environmental Quality Remediation Division - Mine Waste Cleanup Bureau Helena, MT Attn: Tom Henderson	REPORT NUMBER **#75**
PROJECT: Sand Coulee, water system replacement	DATE **Tuesday, 4-14-2015**
CONTRACTOR: Boland Construction Great Falls, MT	DEQ CONTRACT NUMBER
HAS ANYTHING DEVELOPED ON THE WORK WHICH MIGHT LEAD TO A CHANGE ORDER OR FINDING OF FACT? ☐ NO ☐ YES	WEATHER **Overcast, Windy in the afternoon**
HEALTH AND SAFETY Was a Job Safety Meeting held this date? ☐ NO ☐ YES	TEMPERATURE MINIMUM **50** MAXIMUM **55**

NUMBER OF CONTRACTOR'S EMPLOYEES				24 HOUR PRECIPITATION
SUPERVISORY	OPERATORS	LABORERS	TOTAL	**0**
Steve C.	**5**	**7**	**12**	

SUBCONTRACTORS ON SITE

COMPANY NAME	TOTAL EMPLOYEES
1. **United Electric**	**2**
2.	

List the major items of equipment

	units	EQUIPMENT DESCRIPTION	Hours	Comments	
1.	**3**	**Excavators**			
2.	**2**	**Mini Excavators**			
3.	**1**	**Frontend loader**			
4.	**2**	**Skidsteers**			
5.	**2**	**Soft Dig Vacuum**			
6.	**1**	**Concrete Mixer**			
7.					

Notes:

CONSTRUCTION DAILY ACTIVITY REPORT

WORK PERFORMED TODAY

	LOCATION	BID ITEM NUMBER	DESCRIPTION OF WORK PERFORMED
1.	**Service Lines**		**Dade Lane, Houses 75, 95, and 105. Installed saddles and corp stops on main because this section of main was directional drilled.**
2.	**Top of Hill**		**Finished laying pipe from storage tank to well #6 (stopped at 2" valve to give enough room to drill well. Installed 6"x 2" tee connection, 6"- 2" reducer and 2" valve. Poured thrust block around tee. Put concrete block under and at the end of 2" valve. Poured thrust blocks at 1st tee (6" x 3") and at 45 degree bend. Moved to doing services (late afternoon) until parts arrive Friday and to give time for United Electric to finish laying conduit so they are out of the way.**
3.	**United Electric**		**Well Building electrical work and installing conduit to 3 wells (#4, 5,6) tank (for mixer), flow meter manhole, and tank level manhole.**
4.			
5.			

REASON FOR NO WORK:

INFORMATION ON PROGRESS OF WORK – (Causes for delays, extent of delays, Plant, materials, etc.)

MATERIALS DELIVERED TO SITE

	DESCRIPTION
1.	
2.	
3.	

NOTE

INSPECTIONS AND TEST (Include comment pertaining to contractors activities)

	TESTS	RESULTS		COMMENT
1.	**NCI Density Testing**			
2.				

SAMPLES COLLECTED

	SAMPLE TYPE	SAMPLE ID	COMMENTS

1.			
2.			
3.			

VERBAL INSTRUCTIONS GIVEN TO CONTRACTOR

	NAMES	INSTRUCTION	REACTION	REMARKS
1.				
2.				
3.				
4.				

NOTES –

DESIGN MODIFICATIONS

	DESCRIPTION OF MODIFICATION	REASON	ENGINEER APPROVAL?
1.			
2.			

VISITORS

	TIME	NAME	REPRESENTING	REMARKS
1.				
2.				
3.				
4.				
5.				

NOTES

-

REMARKS – (Include controversial matters, information, instructions, disagreements, or any other miscellaneous remarks):

OVERSIGHT SIGNATURE:	DATE	PROJECT MANAGER INITIALS	DATE
Krista Hanson	**4/14/15**		

CONSTRUCTION DAILY ACTIVITY REPORT

TO: Montana Department of Environmental Quality Remediation Division - Mine Waste Cleanup Bureau Helena, MT Attn: Tom Henderson	REPORT NUMBER **#76**
PROJECT: Sand Coulee, water system replacement	DATE **Wednesday, 4-15-2015**
CONTRACTOR: Boland Construction Great Falls, MT	DEQ CONTRACT NUMBER
HAS ANYTHING DEVELOPED ON THE WORK WHICH MIGHT LEAD TO A CHANGE ORDER OR FINDING OF FACT? ☐ NO ☐ YES	WEATHER **Rain wind in morning, sunny in the afternoon**
HEALTH AND SAFETY Was a Job Safety Meeting held this date? ☐ NO ☐ YES	TEMPERATURE MINIMUM **40** MAXIMUM **55**

NUMBER OF CONTRACTOR'S EMPLOYEES				24 HOUR PRECIPITATION
SUPERVISORY	OPERATORS	LABORERS	TOTAL	**0**
Steve C.	**5**	**7**	**12**	

SUBCONTRACTORS ON SITE

COMPANY NAME	TOTAL EMPLOYEES
1. **United Electric**	**2**
2. **Detail Construction**	**4**
3. **Healy Ruff**	**1**

List the major items of equipment

	units	EQUIPMENT DESCRIPTION	Hours	Comments	
1.	**3**	**Excavators**			
2.	**2**	**Mini Excavators**			
3.	**1**	**Frontend loader**			
4.	**2**	**Skidsteers**			
5.	**2**	**Soft Dig Vacuum**			
6.	**1**	**Concrete Mixer**			
7.					

Notes:

CONSTRUCTION DAILY ACTIVITY REPORT

WORK PERFORMED TODAY

	LOCATION	BID ITEM NUMBER	DESCRIPTION OF WORK PERFORMED
1.	**Service Lines**		**Dade Lane, Houses 75, 95, and 105. House 81 Gulch Lane.**
2.	**United Electric**		**Well Building electrical work and installing conduit to 3 wells (#4, 5,6) tank (for mixer), flow meter manhole, and tank level manhole.**
3.	**Detail Construction**		**Poured sidewalk around well building. Added chairs and put in control joints.**
4.			
5.			

REASON FOR NO WORK:

INFORMATION ON PROGRESS OF WORK – (Causes for delays, extent of delays, Plant, materials, etc.)

MATERIALS DELIVERED TO SITE

	DESCRIPTION
1.	
2.	
3.	

NOTE

INSPECTIONS AND TEST (Include comment pertaining to contractors activities)

	TESTS	RESULTS		COMMENT
1.	**NCI Density Testing**			
2.				

SAMPLES COLLECTED

	SAMPLE TYPE	SAMPLE ID	COMMENTS
1.			

2.			
3.			

VERBAL INSTRUCTIONS GIVEN TO CONTRACTOR

	NAMES	INSTRUCTION	REACTION	REMARKS
1.				
2.				
3.				
4.				

NOTES –

DESIGN MODIFICATIONS

	DESCRIPTION OF MODIFICATION	REASON	ENGINEER APPROVAL?
1.			
2.			

VISITORS

	TIME	NAME	REPRESENTING	REMARKS
1.				
2.				
3.				
4.				
5.				

NOTES

- **Subs (Healy Ruff, United Electric and Boland met at well house at 9:00 and discussed electrical work. Pressure switch, pressure sensor, tank level transducer and tank mixer are on site.**
- **United Electric is running conduit and conductors to well #5 for 480V 25 HP pump. Existing pump can't be wired to building with this therefore well #4 is only pump that can be operational with new system until new pumps arrive.**

REMARKS – (Include controversial matters, information, instructions, disagreements, or any other miscellaneous remarks):

OVERSIGHT SIGNATURE:	DATE	PROJECT MANAGER INITIALS	DATE
Krista Hanson	**4/15/15**		

CONSTRUCTION DAILY ACTIVITY REPORT

TO: Montana Department of Environmental Quality Remediation Division - Mine Waste Cleanup Bureau Helena, MT Attn: Tom Henderson	REPORT NUMBER **#77**
PROJECT: Sand Coulee, water system replacement	DATE **Thursday, 4-16-2015**
CONTRACTOR: Boland Construction Great Falls, MT	DEQ CONTRACT NUMBER
HAS ANYTHING DEVELOPED ON THE WORK WHICH MIGHT LEAD TO A CHANGE ORDER OR FINDING OF FACT? ☐ NO ☐ YES	WEATHER **sunny**
HEALTH AND SAFETY Was a Job Safety Meeting held this date? ☐ NO ☐ YES	TEMPERATURE MINIMUM **45** MAXIMUM **60**

NUMBER OF CONTRACTOR'S EMPLOYEES				24 HOUR PRECIPITATION
SUPERVISORY	OPERATORS	LABORERS	TOTAL	**0**
Steve C.	**5**	**7**	**12**	

SUBCONTRACTORS ON SITE	
COMPANY NAME	TOTAL EMPLOYEES
1. **United Electric**	**2**
2.	

List the major items of equipment

	units	EQUIPMENT DESCRIPTION	Hours	Comments	
1.	**2**	**Excavators**			
2.	**2**	**Mini Excavators**			
3.	**1**	**Frontend loader**			
4.	**2**	**Skidsteers**			
5.	**1**	**Soft Dig Vacuum**			
6.	**1**	**Concrete Mixer**			
7.					

Notes:

CONSTRUCTION DAILY ACTIVITY REPORT

WORK PERFORMED TODAY

	LOCATION	BID ITEM NUMBER	DESCRIPTION OF WORK PERFORMED
1.	**Service Lines**		**Finished 3 services on Dade Lane, Houses 75, 95, and 105. Finished 77 and 73 Gulch Lane.**
2.			
3.			
4.			
5.			

REASON FOR NO WORK:

INFORMATION ON PROGRESS OF WORK – (Causes for delays, extent of delays, Plant, materials, etc.)

MATERIALS DELIVERED TO SITE

	DESCRIPTION
1.	
2.	
3.	

NOTE

INSPECTIONS AND TEST (Include comment pertaining to contractors activities)

	TESTS	RESULTS		COMMENT
1.	**NCI Density Testing**			
2.				

SAMPLES COLLECTED

	SAMPLE TYPE	SAMPLE ID	COMMENTS
1.			

2.			
3.			

VERBAL INSTRUCTIONS GIVEN TO CONTRACTOR

	NAMES	INSTRUCTION	REACTION	REMARKS
1.				
2.				
3.				
4.				

NOTES –

DESIGN MODIFICATIONS

	DESCRIPTION OF MODIFICATION	REASON	ENGINEER APPROVAL?
1.			
2.			

VISITORS

	TIME	NAME	REPRESENTING	REMARKS
1.				
2.				
3.				
4.				
5.				

NOTES

-

REMARKS – (Include controversial matters, information, instructions, disagreements, or any other miscellaneous remarks):

OVERSIGHT SIGNATURE:	DATE	PROJECT MANAGER INITIALS	DATE
Krista Hanson	**4/16/15**		

CONSTRUCTION DAILY ACTIVITY REPORT

TO: Montana Department of Environmental Quality Remediation Division - Mine Waste Cleanup Bureau Helena, MT Attn: Tom Henderson	REPORT NUMBER **#78**
PROJECT: Sand Coulee, water system replacement	DATE **Friday, 4-17-2015**
CONTRACTOR: Boland Construction Great Falls, MT	DEQ CONTRACT NUMBER
HAS ANYTHING DEVELOPED ON THE WORK WHICH MIGHT LEAD TO A CHANGE ORDER OR FINDING OF FACT? ☐ NO ☐ YES	WEATHER **sunny**
HEALTH AND SAFETY Was a Job Safety Meeting held this date? ☐ NO ☐ YES	TEMPERATURE MINIMUM **45** / MAXIMUM **60**

NUMBER OF CONTRACTOR'S EMPLOYEES				24 HOUR PRECIPITATION
SUPERVISORY	OPERATORS	LABORERS	TOTAL	**0**
Steve C.	**5**	**7**	**12**	

SUBCONTRACTORS ON SITE

COMPANY NAME	TOTAL EMPLOYEES
1. **United Electric**	**2**
2.	

List the major items of equipment

	units	EQUIPMENT DESCRIPTION	Hours	Comments	
1.	**2**	**Excavators**			
2.	**2**	**Mini Excavators**			
3.	**1**	**Frontend loader**			
4.	**2**	**Skidsteers**			
5.	**1**	**Soft Dig Vacuum**			
6.	**1**	**Concrete Mixer**			
7.					

Notes:

CONSTRUCTION DAILY ACTIVITY REPORT

WORK PERFORMED TODAY

	LOCATION	BID ITEM NUMBER	DESCRIPTION OF WORK PERFORMED
1.	**Service Lines**		**526 East Hunter. Used pneumatic gopher to bore under garage at 540 East Hunter.**
2.	**Hill**		**Tied new main (temporary connection with saddle on 4" line) into Well #5. Well #5 is now live to new tank and old tank. When transition is made to new tank we will have to reconnect to 4" line permanently.**
3.			
4.			
5.			

REASON FOR NO WORK:

INFORMATION ON PROGRESS OF WORK – (Causes for delays, extent of delays, Plant, materials, etc.)

MATERIALS DELIVERED TO SITE

	DESCRIPTION
1.	
2.	
3.	

NOTE

INSPECTIONS AND TEST (Include comment pertaining to contractors activities)

	TESTS	RESULTS		COMMENT
1.	**NCI Density Testing**			
2.				

SAMPLES COLLECTED

	SAMPLE TYPE	SAMPLE ID	COMMENTS

1.			
2.			
3.			

VERBAL INSTRUCTIONS GIVEN TO CONTRACTOR

	NAMES	INSTRUCTION	REACTION	REMARKS
1.				
2.				
3.				
4.				

NOTES –

DESIGN MODIFICATIONS

	DESCRIPTION OF MODIFICATION	REASON	ENGINEER APPROVAL?
1.			
2.			

VISITORS

	TIME	NAME	REPRESENTING	REMARKS
1.				
2.				
3.				
4.				
5.				

NOTES

-

REMARKS – (Include controversial matters, information, instructions, disagreements, or any other miscellaneous remarks):

OVERSIGHT SIGNATURE:	DATE	PROJECT MANAGER INITIALS	DATE
Krista Hanson	**4/17/15**		

CONSTRUCTION DAILY ACTIVITY REPORT

TO: Montana Department of Environmental Quality Remediation Division - Mine Waste Cleanup Bureau Helena, MT Attn: Tom Henderson	REPORT NUMBER **#79**
PROJECT: Sand Coulee, water system replacement	DATE **Monday, 4-20-2015**
CONTRACTOR: Boland Construction Great Falls, MT	DEQ CONTRACT NUMBER
HAS ANYTHING DEVELOPED ON THE WORK WHICH MIGHT LEAD TO A CHANGE ORDER OR FINDING OF FACT? ☐ NO ☐ YES	WEATHER **sunny**
HEALTH AND SAFETY Was a Job Safety Meeting held this date? ☐ NO ☐ YES	TEMPERATURE MINIMUM **50** MAXIMUM **60**

NUMBER OF CONTRACTOR'S EMPLOYEES				24 HOUR PRECIPITATION
SUPERVISORY	OPERATORS	LABORERS	TOTAL	**0**
Steve C.	**5**	**7**	**12**	

SUBCONTRACTORS ON SITE	
COMPANY NAME	TOTAL EMPLOYEES
1. **United Electric**	**1**
2.	

List the major items of equipment

	units	EQUIPMENT DESCRIPTION	Hours	Comments	
1.	**2**	**Excavators**			
2.	**2**	**Mini Excavators**			
3.	**1**	**Frontend loader**			
4.	**2**	**Skidsteers**			
5.	**1**	**Soft Dig Vacuum**			
6.	**1**	**Concrete Mixer**			
7.					

Notes:

CONSTRUCTION DAILY ACTIVITY REPORT

WORK PERFORMED TODAY

	LOCATION	BID ITEM NUMBER	DESCRIPTION OF WORK PERFORMED
1.	**Service Lines**		**Backfilled 540 East Hunter. Connected 522 East Hunter. Started 528 East Hunter, had to tow RV because it wouldn't start. Connected House # 518 by fire hall. Installed meter pit in alley by junk yard.**
2.	**United Electric**		**Well Building. Lights, outlets, panels, etc.**
3.			
4.			
5.			

REASON FOR NO WORK:

INFORMATION ON PROGRESS OF WORK – (Causes for delays, extent of delays, Plant, materials, etc.)

MATERIALS DELIVERED TO SITE

	DESCRIPTION
1.	
2.	
3.	

NOTE

INSPECTIONS AND TEST (Include comment pertaining to contractors activities)

	TESTS	RESULTS		COMMENT
1.	**NCI Density Testing**			
2.				

SAMPLES COLLECTED

	SAMPLE TYPE	SAMPLE ID	COMMENTS
1.			
2.			

3.			

VERBAL INSTRUCTIONS GIVEN TO CONTRACTOR

	NAMES	INSTRUCTION	REACTION	REMARKS
1.				
2.				
3.				
4.				

NOTES –

DESIGN MODIFICATIONS

	DESCRIPTION OF MODIFICATION	REASON	ENGINEER APPROVAL?
1.			
2.			

VISITORS

	TIME	NAME	REPRESENTING	REMARKS
1.				
2.				
3.				
4.				
5.				

NOTES

- **Spoke with Steve and electrician in the morning about trench detail, details of mixer (i.e. – attaching disconnect box to ladder wih bracket, conduit up the side of the tank, junction box at top, leaving a few coils of wire at the top for slack. United Electric asked where to put post and disconnect box for future well 6. Barry will get back to me on how much room drillers need. Ideally they could wait and do that after well #6 is installed.**
- **We pumped water out of PRV manhole. It was filling ~10-15 gpm but slowed down after 5-10 minutes. Will try pumping it out again tomorrow and sealing with hydraulic cement.**

REMARKS – (Include controversial matters, information, instructions, disagreements, or any other miscellaneous remarks):

OVERSIGHT SIGNATURE:	DATE	PROJECT MANAGER INITIALS	DATE
Krista Hanson	**4/20/15**		

CONSTRUCTION DAILY ACTIVITY REPORT

TO: Montana Department of Environmental Quality Remediation Division - Mine Waste Cleanup Bureau Helena, MT Attn: Tom Henderson	REPORT NUMBER **#80**
PROJECT: Sand Coulee, water system replacement	DATE **Tuesday, 4-21-2015**
CONTRACTOR: Boland Construction Great Falls, MT	DEQ CONTRACT NUMBER
HAS ANYTHING DEVELOPED ON THE WORK WHICH MIGHT LEAD TO A CHANGE ORDER OR FINDING OF FACT? ☐ NO ☐ YES	WEATHER **sunny**
HEALTH AND SAFETY Was a Job Safety Meeting held this date? ☐ NO ☐ YES	TEMPERATURE MINIMUM **55** MAXIMUM **65**

NUMBER OF CONTRACTOR'S EMPLOYEES				24 HOUR PRECIPITATION
SUPERVISORY	OPERATORS	LABORERS	TOTAL	**0**
Steve C.	**5**	**7**	**12**	

SUBCONTRACTORS ON SITE	
COMPANY NAME	TOTAL EMPLOYEES
1. **United Electric**	**3**
2.	

List the major items of equipment

	units	EQUIPMENT DESCRIPTION	Hours	Comments	
1.	**2**	**Excavators**			
2.	**2**	**Mini Excavators**			
3.	**1**	**Frontend loader**			
4.	**2**	**Skidsteers**			
5.	**1**	**Soft Dig Vacuum**			
6.	**1**	**Concrete Mixer**			
7.					

Notes:

CONSTRUCTION DAILY ACTIVITY REPORT

WORK PERFORMED TODAY

	LOCATION	BID ITEM NUMBER	DESCRIPTION OF WORK PERFORMED
1.	**Service Lines**		**Finished 528 Rosies Lane. Backfilling meter pit in alley by junk yard. Connecting house #90 on Dade and #70 on Rosies Lane. Finished House on Fortune #30.**
2.	**United Electric**		**Dug out trenches, placed sand and warning tape. Backfilled trenches.**
3.	**Tank Hill**		**Filled hill section of pipe from tank to PRV manhole. Getting air out of line, will pressure test Wednesday.**
4.	**PRV manhole**		**Pumping water out of PRV drain. Drain was filled about halfway up before pumping. Will try sealing again tomorrow.**
5.			

REASON FOR NO WORK:

INFORMATION ON PROGRESS OF WORK – (Causes for delays, extent of delays, Plant, materials, etc.)

MATERIALS DELIVERED TO SITE

	DESCRIPTION
1.	
2.	
3.	

NOTE

INSPECTIONS AND TEST (Include comment pertaining to contractors activities)

	TESTS	RESULTS		COMMENT
1.	**NCI Density Testing**			
2.				

SAMPLES COLLECTED

	SAMPLE TYPE	SAMPLE ID	COMMENTS
1.			

2.			
3.			

VERBAL INSTRUCTIONS GIVEN TO CONTRACTOR

	NAMES	INSTRUCTION	REACTION	REMARKS
1.				
2.				
3.				
4.				

NOTES –

DESIGN MODIFICATIONS

	DESCRIPTION OF MODIFICATION	REASON	ENGINEER APPROVAL?
1.			
2.			

VISITORS

	TIME	NAME	REPRESENTING	REMARKS
1.				
2.				
3.				
4.				
5.				

NOTES

REMARKS – (Include controversial matters, information, instructions, disagreements, or any other miscellaneous remarks):

OVERSIGHT SIGNATURE:	DATE	PROJECT MANAGER INITIALS	DATE
Krista Hanson	**4/21/15**		

CONSTRUCTION DAILY ACTIVITY REPORT

TO: Montana Department of Environmental Quality Remediation Division - Mine Waste Cleanup Bureau Helena, MT Attn: Tom Henderson	REPORT NUMBER **#81**
PROJECT: Sand Coulee, water system replacement	DATE **Wednesday, 4-22-2015**
CONTRACTOR: Boland Construction Great Falls, MT	DEQ CONTRACT NUMBER
HAS ANYTHING DEVELOPED ON THE WORK WHICH MIGHT LEAD TO A CHANGE ORDER OR FINDING OF FACT? ☐ NO ☐ YES	WEATHER **sunny**
HEALTH AND SAFETY Was a Job Safety Meeting held this date? ☐ NO ☐ YES	TEMPERATURE MINIMUM **55** MAXIMUM **65**

NUMBER OF CONTRACTOR'S EMPLOYEES				24 HOUR PRECIPITATION
SUPERVISORY	OPERATORS	LABORERS	TOTAL	**0**
Steve C.	**5**	**7**	**12**	

SUBCONTRACTORS ON SITE

COMPANY NAME	TOTAL EMPLOYEES
1. **United Electric**	**2**
2.	

List the major items of equipment

	units	EQUIPMENT DESCRIPTION	Hours	Comments	
1.	**2**	**Excavators**			
2.	**2**	**Mini Excavators**			
3.	**1**	**Frontend loader**			
4.	**2**	**Skidsteers**			
5.	**1**	**Soft Dig Vacuum**			
6.	**1**	**Concrete Mixer**			
7.					

Notes:

CONSTRUCTION DAILY ACTIVITY REPORT

WORK PERFORMED TODAY

	LOCATION	BID ITEM NUMBER	DESCRIPTION OF WORK PERFORMED
1.	**Service Lines**		**Backfilled around House #90 on Dade. Connecting #80 on Dade Lane. Saw cutting concrete at House #71 Gulch. Installed meter pit.**
2.	**United Electric**		**Working on electrical for mixer and manholes.**
3.	**Tank Hill**		**Pressure tested pipe from top of hill to PRV manhole. 120 psi for two hours.**
4.			
5.			

REASON FOR NO WORK:

INFORMATION ON PROGRESS OF WORK – (Causes for delays, extent of delays, Plant, materials, etc.)

MATERIALS DELIVERED TO SITE

	DESCRIPTION
1.	
2.	
3.	

NOTE

INSPECTIONS AND TEST (Include comment pertaining to contractors activities)

	TESTS	RESULTS		COMMENT
1.	**NCI Density Testing**			
2.				

SAMPLES COLLECTED

	SAMPLE TYPE	SAMPLE ID	COMMENTS
1.			
2.			

3.			

VERBAL INSTRUCTIONS GIVEN TO CONTRACTOR

	NAMES	INSTRUCTION	REACTION	REMARKS
1.				
2.				
3.				
4.				

NOTES –

DESIGN MODIFICATIONS

	DESCRIPTION OF MODIFICATION	REASON	ENGINEER APPROVAL?
1.			
2.			

VISITORS

	TIME	NAME	REPRESENTING	REMARKS
1.				
2.				
3.				
4.				
5.				

NOTES

- **Service on 80 Dade, service line not where shown on plans. Several pipes under rock wall on NE side of House. Had to pound rod under tock wall inside house to hook up service. Capping unknown lines.**
- **Service on 70 Rosies Lane, buried septic and drain field not where shown. Septic tank and drain field on NE side of house. Used pneumatic gopher to bore line under septic pipe to connect service.**
- **Log House 125 Dahn's Lane. Service line was supposed to come out of NW side of house and hook into old main going through alley but old 4" main in alley is shut off and house still has water. Service line must be hooked to old main on SW side of house. Looking for service line. Have used vac to dig about 20-30 feet in front of house.**

REMARKS – (Include controversial matters, information, instructions, disagreements, or any other miscellaneous remarks):

OVERSIGHT SIGNATURE:	DATE	PROJECT MANAGER INITIALS	DATE
Krista Hanson	**4/22/15**		

CONSTRUCTION DAILY ACTIVITY REPORT

TO: Montana Department of Environmental Quality Remediation Division - Mine Waste Cleanup Bureau Helena, MT Attn: Tom Henderson	REPORT NUMBER **#82**
PROJECT: Sand Coulee, water system replacement	DATE **Thursday, 4-23-2015**
CONTRACTOR: Boland Construction Great Falls, MT	DEQ CONTRACT NUMBER
HAS ANYTHING DEVELOPED ON THE WORK WHICH MIGHT LEAD TO A CHANGE ORDER OR FINDING OF FACT? ☐ NO ☐ YES	WEATHER **Overcast/partly cloudy**
HEALTH AND SAFETY Was a Job Safety Meeting held this date? ☐ NO ☐ YES	TEMPERATURE MINIMUM **55** MAXIMUM **65**

NUMBER OF CONTRACTOR'S EMPLOYEES				24 HOUR PRECIPITATION
SUPERVISORY	OPERATORS	LABORERS	TOTAL	**0**
Steve C.	**5**	**7**	**12**	

SUBCONTRACTORS ON SITE

COMPANY NAME	TOTAL EMPLOYEES
1. **United Electric**	**2**
2.	

List the major items of equipment

	units	EQUIPMENT DESCRIPTION	Hours	Comments	
1.	**2**	**Excavators**			
2.	**3**	**Mini Excavators**			
3.	**1**	**Frontend loader**			
4.	**2**	**Skidsteers**			
5.	**1**	**Soft Dig Vacuum**			
6.	**1**	**Concrete Mixer**			
7.					

Notes:

CONSTRUCTION DAILY ACTIVITY REPORT

WORK PERFORMED TODAY

	LOCATION	BID ITEM NUMBER	DESCRIPTION OF WORK PERFORMED
1.	**Service Lines**		**Backfilled around House #71 Gulch Lane. Finished House #80 on Dade. Service line to house 70 Dahn's Lane. Located curb stop under sidewalk at log house 125 Dahns and saw cut sidewalk. Talked to owner about location of water lines and witched House #35 Gulch Lane to try to locate possible location of water line.**
2.	**United Electric**		**Backfilled trenches – placed sand and electrical warning tape. Installed post, disconnect, conduit, and junction box for mixer.**
3.	**Tank Hill**		**Chlorinated pipe from top of hill to PRV manhole.**
4.			
5.			

REASON FOR NO WORK:

INFORMATION ON PROGRESS OF WORK – (Causes for delays, extent of delays, Plant, materials, etc.)

MATERIALS DELIVERED TO SITE

	DESCRIPTION
1.	
2.	
3.	

NOTE

INSPECTIONS AND TEST (Include comment pertaining to contractors activities)

	TESTS	RESULTS		COMMENT
1.	**NCI Density Testing**			
2.				

SAMPLES COLLECTED

	SAMPLE TYPE	SAMPLE ID	COMMENTS
1.			
2.			
3.			

VERBAL INSTRUCTIONS GIVEN TO CONTRACTOR

	NAMES	INSTRUCTION	REACTION	REMARKS
1.				
2.				
3.				
4.				

NOTES –

DESIGN MODIFICATIONS

	DESCRIPTION OF MODIFICATION	REASON	ENGINEER APPROVAL?
1.			
2.			

VISITORS

	TIME	NAME	REPRESENTING	REMARKS
1.				
2.				
3.				
4.				
5.				

NOTES

- **Meeting with DEQ, Boland, District, NCI. See meeting notes.**

REMARKS – (Include controversial matters, information, instructions, disagreements, or any other miscellaneous remarks):

OVERSIGHT SIGNATURE:	DATE	PROJECT MANAGER INITIALS	DATE
Krista Hanson	**4/23/15**		

CONSTRUCTION DAILY ACTIVITY REPORT

TO: Montana Department of Environmental Quality Remediation Division - Mine Waste Cleanup Bureau Helena, MT Attn: Tom Henderson	REPORT NUMBER **#83**
PROJECT: Sand Coulee, water system replacement	DATE **Friday, 4-24-2015**
CONTRACTOR: Boland Construction Great Falls, MT	DEQ CONTRACT NUMBER
HAS ANYTHING DEVELOPED ON THE WORK WHICH MIGHT LEAD TO A CHANGE ORDER OR FINDING OF FACT? ☐ NO ☐ YES	WEATHER **Overcast/rained**
HEALTH AND SAFETY Was a Job Safety Meeting held this date? ☐ NO ☐ YES	TEMPERATURE MINIMUM **45** MAXIMUM **50**

NUMBER OF CONTRACTOR'S EMPLOYEES				24 HOUR PRECIPITATION
SUPERVISORY	OPERATORS	LABORERS	TOTAL	**0**
Steve C.	**5**	**7**	**12**	

SUBCONTRACTORS ON SITE

COMPANY NAME	TOTAL EMPLOYEES
1. **United Electric**	**1**
2.	

List the major items of equipment

	units	EQUIPMENT DESCRIPTION	Hours	Comments	
1.	**2**	**Excavators**			
2.	**3**	**Mini Excavators**			
3.	**1**	**Frontend loader**			
4.	**2**	**Skidsteers**			
5.	**1**	**Soft Dig Vacuum**			
6.	**1**	**Concrete Mixer**			
7.					

Notes:

CONSTRUCTION DAILY ACTIVITY REPORT

WORK PERFORMED TODAY

	LOCATION	BID ITEM NUMBER	DESCRIPTION OF WORK PERFORMED
1.	**Service Lines**		**Service line to house 50 Dahn's Lane. Completed service line to house #525 East Hunter. Completed service line to house #30 Dahn's Lane. Poured concrete at House 71 Gulch Lane.**
2.	**United Electric**		**Installing electrical in flow meter manhole and overflow manhole.**
3.			
4.			
5.			

REASON FOR NO WORK:

INFORMATION ON PROGRESS OF WORK – (Causes for delays, extent of delays, Plant, materials, etc.)

MATERIALS DELIVERED TO SITE

	DESCRIPTION
1.	
2.	
3.	

NOTE

INSPECTIONS AND TEST (Include comment pertaining to contractors activities)

	TESTS	RESULTS		COMMENT
1.	**NCI Density Testing**			
2.				

SAMPLES COLLECTED

	SAMPLE TYPE	SAMPLE ID	COMMENTS
1.			

2.			
3.			

VERBAL INSTRUCTIONS GIVEN TO CONTRACTOR

	NAMES	INSTRUCTION	REACTION	REMARKS
1.				
2.				
3.				
4.				

NOTES –

DESIGN MODIFICATIONS

	DESCRIPTION OF MODIFICATION	REASON	ENGINEER APPROVAL?
1.			
2.			

VISITORS

	TIME	NAME	REPRESENTING	REMARKS
1.				
2.				
3.				
4.				
5.				

NOTES

- **Need new well head for well #5 for 1 1/2″ power conduit, 1″ transducer conduit and 1″ power conduit.**

REMARKS – (Include controversial matters, information, instructions, disagreements, or any other miscellaneous remarks):

OVERSIGHT SIGNATURE:	DATE	PROJECT MANAGER INITIALS	DATE
Krista Hanson	**4/24/15**		

CONSTRUCTION DAILY ACTIVITY REPORT

TO: Montana Department of Environmental Quality Remediation Division - Mine Waste Cleanup Bureau Helena, MT Attn: Tom Henderson	REPORT NUMBER **#84**
PROJECT: Sand Coulee, water system replacement	DATE **Monday, 4-27-2015**
CONTRACTOR: Boland Construction Great Falls, MT	DEQ CONTRACT NUMBER
HAS ANYTHING DEVELOPED ON THE WORK WHICH MIGHT LEAD TO A CHANGE ORDER OR FINDING OF FACT? ☐ NO ☐ YES	WEATHER **Sunny**
HEALTH AND SAFETY Was a Job Safety Meeting held this date? ☐ NO ☐ YES	TEMPERATURE MINIMUM **50** MAXIMUM **60**

NUMBER OF CONTRACTOR'S EMPLOYEES				24 HOUR PRECIPITATION
SUPERVISORY	OPERATORS	LABORERS	TOTAL	**0**
Steve C.	**5**	**7**	**12**	

SUBCONTRACTORS ON SITE

COMPANY NAME	TOTAL EMPLOYEES
1. **United Electric**	**2**
2.	

List the major items of equipment

	units	EQUIPMENT DESCRIPTION	Hours	Comments	
1.	**2**	**Excavators**			
2.	**3**	**Mini Excavators**			
3.	**1**	**Frontend loader**			
4.	**2**	**Skidsteers**			
5.	**1**	**Soft Dig Vacuum**			
6.	**1**	**Concrete Mixer**			
7.					

Notes:

CONSTRUCTION DAILY ACTIVITY REPORT

WORK PERFORMED TODAY

	LOCATION	BID ITEM NUMBER	DESCRIPTION OF WORK PERFORMED
1.	**Service Lines**		**Service line installed to log house #125 Dahn's Lane. Hit drain field, deviated path to go around drain field. 2 services at 516 East Hunter. One to house and one to field. Put yard hydrant at end of service line to field.**
2.	**United Electric**		**Fixed a light, pulling wires to inflow meter manhole and mixer and performed other miscellaneous items of work – close to finishing up what can be done right now**
3.	**Tank Hill**		**Chlorinated pipe sat over the weekend. Flushed pipe from top of hill to PRV manhole and took sample.**
4.			
5.			

REASON FOR NO WORK:

INFORMATION ON PROGRESS OF WORK – (Causes for delays, extent of delays, Plant, materials, etc.)

MATERIALS DELIVERED TO SITE

	DESCRIPTION
1.	
2.	
3.	

NOTE

INSPECTIONS AND TEST (Include comment pertaining to contractors activities)

	TESTS	RESULTS		COMMENT
1.	**NCI Density Testing**			
2.				

SAMPLES COLLECTED

	SAMPLE TYPE	SAMPLE ID	COMMENTS
1.			
2.			
3.			

VERBAL INSTRUCTIONS GIVEN TO CONTRACTOR

	NAMES	INSTRUCTION	REACTION	REMARKS
1.				
2.				
3.				
4.				

NOTES –

DESIGN MODIFICATIONS

	DESCRIPTION OF MODIFICATION	REASON	ENGINEER APPROVAL?
1.			
2.			

VISITORS

	TIME	NAME	REPRESENTING	REMARKS
1.				
2.				
3.				
4.				
5.				

NOTES

- **Gulch Lane House #35 – started exploratory 1:00.**
- **Conduit going into well head on #5 is 1 ¼ " – Electrician to verify he could make this work – would combine control and power in J-box and then have to put control and power in same conduit for short distance (~ 2 feet)**
- **To reiterate Ralph's email 4/27/15, Jake will let me know what size disconnect to use for future pump and will this disconnect be okay for existing pump. Or…can we temporarily run Well #5 without disconnect? Because we have 1 ½ " power conduit going to disconnect for new pump and are using 1" power conduit for existing pump so that would have to be changed out.**
- **Well #4 and #5 to be hooked up according to Ralph's email.**
- **Use existing 15 Amp disconnect for well #4?**

REMARKS – (Include controversial matters, information, instructions, disagreements, or any other miscellaneous remarks):

OVERSIGHT SIGNATURE:	DATE	PROJECT MANAGER INITIALS	DATE
Krista Hanson	**4/27/15**		

CONSTRUCTION DAILY ACTIVITY REPORT

TO: Montana Department of Environmental Quality Remediation Division - Mine Waste Cleanup Bureau Helena, MT Attn: Tom Henderson	REPORT NUMBER **#85**
PROJECT: Sand Coulee, water system replacement	DATE **Tuesday, 4-28-2015**
CONTRACTOR: Boland Construction Great Falls, MT	DEQ CONTRACT NUMBER
HAS ANYTHING DEVELOPED ON THE WORK WHICH MIGHT LEAD TO A CHANGE ORDER OR FINDING OF FACT? ☐ NO ☐ YES	WEATHER **Sunny**
HEALTH AND SAFETY Was a Job Safety Meeting held this date? ☐ NO ☐ YES	TEMPERATURE MINIMUM **55** / MAXIMUM **70**

NUMBER OF CONTRACTOR'S EMPLOYEES				24 HOUR PRECIPITATION
SUPERVISORY	OPERATORS	LABORERS	TOTAL	**0**
Steve C.	**5**	**7**	**12**	

SUBCONTRACTORS ON SITE

COMPANY NAME	TOTAL EMPLOYEES
1. **United Electric**	**1**
2.	

List the major items of equipment

	units	EQUIPMENT DESCRIPTION	Hours	Comments	
1.	**2**	**Excavators**			
2.	**3**	**Mini Excavators**			
3.	**1**	**Frontend loader**			
4.	**2**	**Skidsteers**			
5.	**1**	**Soft Dig Vacuum**			
6.	**1**	**Concrete Mixer**			
7.					

Notes:

CONSTRUCTION DAILY ACTIVITY REPORT

WORK PERFORMED TODAY

	LOCATION	BID ITEM NUMBER	DESCRIPTION OF WORK PERFORMED
1.	**Service Lines**		**Backfilling at 516 East Hunter. Extra service to field at owners expense. Continued exploratory on Gulch Lane. So far about 10-12 lateral feet and 9.5 feet deep (due to 3' rock wall). Services to 531 and 537 on hill. Service to House 554 in alley. This was one of the instances that had one service feeding two houses and had to be separated.**
2.	**United Electric**		**Worked on inflow meter manhole and pulling wires to disconnect. Ran conduit to vent at center of tank. Drilled hole in vent and used 90 degree connector to attach flex conduit to vent. Sealed connection.**
3.			
4.			
5.			

REASON FOR NO WORK:

INFORMATION ON PROGRESS OF WORK – (Causes for delays, extent of delays, Plant, materials, etc.)

MATERIALS DELIVERED TO SITE

	DESCRIPTION
1.	
2.	
3.	

NOTE

INSPECTIONS AND TEST (Include comment pertaining to contractors activities)

	TESTS	RESULTS		COMMENT
1.	**NCI Density Testing**			
2.				

SAMPLES COLLECTED

	SAMPLE TYPE	SAMPLE ID	COMMENTS
1.			
2.			
3.			

VERBAL INSTRUCTIONS GIVEN TO CONTRACTOR

	NAMES	INSTRUCTION	REACTION	REMARKS
1.				
2.				
3.				
4.				

NOTES –

DESIGN MODIFICATIONS

	DESCRIPTION OF MODIFICATION	REASON	ENGINEER APPROVAL?
1.			
2.			

VISITORS

	TIME	NAME	REPRESENTING	REMARKS
1.				
2.				
3.				
4.				
5.				

NOTES

REMARKS – (Include controversial matters, information, instructions, disagreements, or any other miscellaneous remarks):

OVERSIGHT SIGNATURE:	DATE	PROJECT MANAGER INITIALS	DATE
Krista Hanson	**4/28/15**		

CONSTRUCTION DAILY ACTIVITY REPORT

TO: Montana Department of Environmental Quality Remediation Division - Mine Waste Cleanup Bureau Helena, MT Attn: Tom Henderson	REPORT NUMBER **#86**
PROJECT: Sand Coulee, water system replacement	DATE **Wednesday, 4-29-2015**
CONTRACTOR: Boland Construction Great Falls, MT	DEQ CONTRACT NUMBER
HAS ANYTHING DEVELOPED ON THE WORK WHICH MIGHT LEAD TO A CHANGE ORDER OR FINDING OF FACT? ☐ NO ☐ YES	WEATHER **Sunny/windy**
HEALTH AND SAFETY Was a Job Safety Meeting held this date? ☐ NO ☐ YES	TEMPERATURE MINIMUM **55** / MAXIMUM **67**

NUMBER OF CONTRACTOR'S EMPLOYEES

SUPERVISORY	OPERATORS	LABORERS	TOTAL
Steve C.	**5**	**7**	**12**

24 HOUR PRECIPITATION: **0**

SUBCONTRACTORS ON SITE

COMPANY NAME	TOTAL EMPLOYEES
1. **United Electric**	**2**
2. **Detail Construction**	**2**

List the major items of equipment

	units	EQUIPMENT DESCRIPTION	Hours	Comments	
1.	**2**	**Excavators**			
2.	**3**	**Mini Excavators**			
3.	**1**	**Frontend loader**			
4.	**2**	**Skidsteers**			
5.	**1**	**Soft Dig Vacuum**			
6.	**1**	**Concrete Mixer**			
7.					

Notes:

CONSTRUCTION DAILY ACTIVITY REPORT

WORK PERFORMED TODAY

	LOCATION	BID ITEM NUMBER	DESCRIPTION OF WORK PERFORMED
1.	**Service Lines**		**Backfilling 531 and 537 on hill. Backfilling House 554 in alley. Poured concrete sidewalk at log house 125 and House 554 in alley.**
2.	**United Electric**		**Worked on inflow meter manhole and well #4 electrical.**
3.	**Detail**		**Removed forms, fixed ceiling panel.**
4.	**Gulch Lane**		**Have not found service line at House 35 Gulch Lane yet. Moved over to house next door (House 31 Gulch Lane) to see if we could find this service line. Haven't found either service yet. 20-25 hours this week on these two houses.**
5.			

REASON FOR NO WORK:

INFORMATION ON PROGRESS OF WORK – (Causes for delays, extent of delays, Plant, materials, etc.)

MATERIALS DELIVERED TO SITE

	DESCRIPTION
1.	
2.	
3.	

NOTE

INSPECTIONS AND TEST (Include comment pertaining to contractors activities)

	TESTS	RESULTS		COMMENT
1.	**NCI Density Testing**			
2.				

SAMPLES COLLECTED

	SAMPLE TYPE	SAMPLE ID	COMMENTS
1.			
2.			
3.			

CONSTRUCTION DAILY ACTIVITY REPORT

VERBAL INSTRUCTIONS GIVEN TO CONTRACTOR

	NAMES	INSTRUCTION	REACTION	REMARKS
1.				
2.				
3.				
4.				

NOTES –

DESIGN MODIFICATIONS

	DESCRIPTION OF MODIFICATION	REASON	ENGINEER APPROVAL?
1.			
2.			

VISITORS

	TIME	NAME	REPRESENTING	REMARKS
1.				
2.				
3.				
4.				
5.				

NOTES

- **Jake, Ralph, Rob, Steve and United met in the morning on electrical and mechanical items.**
- **Need to clean sump drain in inflow meter manhole.**
- **¼" ball valves on switch (2 on the switch to relieve pressure), guage, and transducer to isolate each**
- **Well House – need floor boards, weather stripping, thresholds and grouting next to light switch before painting. Acid wash outside of building before coating.**
- **Mixer installation – need to talk to PAX to see how to lower it into the tank – there doesn't seem to be anywhere to attach a cord to lower the mixer. PAX instructions show them lowering it with power cord, this does not seem like a good idea. Need strain relief.**
- **Rob is resizing breaker and overload for well #4 (so it can be used with well #5)**
- **Need to resize breakers for 5 and 6 to 70 amp (they are currently 100 amp).**
- **Using J box on well head #5 to get conductors into well.**
- **When we get the new pumps and lower the transducers we should try to feed the cable without taping it to the column pipe so that it can be removed, otherwise we have to remove pump to get transducer out.**

REMARKS – (Include controversial matters, information, instructions, disagreements, or any other miscellaneous remarks):

OVERSIGHT SIGNATURE:	DATE	PROJECT MANAGER INITIALS	DATE
Krista Hanson	**4/29/15**		

CONSTRUCTION DAILY ACTIVITY REPORT

TO: Montana Department of Environmental Quality Remediation Division - Mine Waste Cleanup Bureau Helena, MT Attn: Tom Henderson	REPORT NUMBER **#89**
PROJECT: Sand Coulee, water system replacement	DATE **Monday, 5-4-2015**
CONTRACTOR: Boland Construction Great Falls, MT	DEQ CONTRACT NUMBER
HAS ANYTHING DEVELOPED ON THE WORK WHICH MIGHT LEAD TO A CHANGE ORDER OR FINDING OF FACT? ☐ NO ☐ YES	WEATHER **Sunny**
HEALTH AND SAFETY Was a Job Safety Meeting held this date? ☐ NO ☐ YES	TEMPERATURE MINIMUM **55** MAXIMUM **67**

NUMBER OF CONTRACTOR'S EMPLOYEES				24 HOUR PRECIPITATION
SUPERVISORY	OPERATORS	LABORERS	TOTAL	**0**
Steve C.	**5**	**7**	**12**	

SUBCONTRACTORS ON SITE

COMPANY NAME	TOTAL EMPLOYEES
1. **United Electric**	**1**
2. **Three Rivers**	**2**

List the major items of equipment

	units	EQUIPMENT DESCRIPTION	Hours	Comments	
1.	**2**	**Excavators**			
2.	**3**	**Mini Excavators**			
3.	**1**	**Frontend loader**			
4.	**2**	**Skidsteers**			
5.	**1**	**Soft Dig Vacuum**			
6.	**1**	**Concrete Mixer**			
7.					

Notes:

CONSTRUCTION DAILY ACTIVITY REPORT

WORK PERFORMED TODAY

	LOCATION	BID ITEM NUMBER	DESCRIPTION OF WORK PERFORMED
1.	**Landscaping**		**Placed topsoil and sod at 51 Gulch Lane. Replaced clothesline at 155 Dahn's that got broken. Replaced meter pit lid and dug out meter pit for concrete at 554 alley.**
2.	**Tank/Electrical**		**Continued filling tank, almost full – about 4 feet from top at end of day. Once tank is full it sits for 24 hours before sample can be taken. Worked on well #5 electrical.**
3.	**House 35 Gulch Lane Exploratory**		**Continued exploratory at House 35 Gulch Lane. So far we've excavated from fire hydrant about 20 feet toward house – 9-10 feet deep. Today we moved below rock wall to try to find main and locate corp stop. Vac broke down about 3:00 p.m.**
4.	**Three Rivers**		**Trenched to well building and got internet into building.**
5.			

REASON FOR NO WORK:

INFORMATION ON PROGRESS OF WORK – (Causes for delays, extent of delays, Plant, materials, etc.)

MATERIALS DELIVERED TO SITE

	DESCRIPTION
1.	
2.	
3.	

NOTE

INSPECTIONS AND TEST (Include comment pertaining to contractors activities)

	TESTS	RESULTS		COMMENT
1.	**NCI Density Testing**			
2.				

SAMPLES COLLECTED

	SAMPLE TYPE	SAMPLE ID	COMMENTS
1.			
2.			
3.			

CONSTRUCTION DAILY ACTIVITY REPORT

VERBAL INSTRUCTIONS GIVEN TO CONTRACTOR

	NAMES	INSTRUCTION	REACTION	REMARKS
1.				
2.				
3.				
4.				

NOTES –

DESIGN MODIFICATIONS

	DESCRIPTION OF MODIFICATION	REASON	ENGINEER APPROVAL?
1.			
2.			

VISITORS

	TIME	NAME	REPRESENTING	REMARKS
1.				
2.				
3.				
4.				
5.				

NOTES

-

-

REMARKS – (Include controversial matters, information, instructions, disagreements, or any other miscellaneous remarks):

OVERSIGHT SIGNATURE:	DATE	PROJECT MANAGER INITIALS	DATE
Krista Hanson	**5/4/15**		

CONSTRUCTION DAILY ACTIVITY REPORT

TO: Montana Department of Environmental Quality Remediation Division - Mine Waste Cleanup Bureau Helena, MT Attn: Tom Henderson	REPORT NUMBER **#87**
PROJECT: Sand Coulee, water system replacement	DATE **Thursday, 4-30-2015**
CONTRACTOR: Boland Construction Great Falls, MT	DEQ CONTRACT NUMBER
HAS ANYTHING DEVELOPED ON THE WORK WHICH MIGHT LEAD TO A CHANGE ORDER OR FINDING OF FACT? ☐ NO ☐ YES	WEATHER **Sunny/windy**
HEALTH AND SAFETY Was a Job Safety Meeting held this date? ☐ NO ☐ YES	TEMPERATURE MINIMUM **55** MAXIMUM **67**

NUMBER OF CONTRACTOR'S EMPLOYEES				24 HOUR PRECIPITATION
SUPERVISORY	OPERATORS	LABORERS	TOTAL	**0**
Steve C.	**5**	**7**	**12**	

SUBCONTRACTORS ON SITE

COMPANY NAME	TOTAL EMPLOYEES
1.	

List the major items of equipment

	units	EQUIPMENT DESCRIPTION	Hours	Comments	
1.	**2**	**Excavators**			
2.	**3**	**Mini Excavators**			
3.	**1**	**Frontend loader**			
4.	**2**	**Skidsteers**			
5.	**1**	**Soft Dig Vacuum**			
6.	**1**	**Concrete Mixer**			
7.					

Notes:

CONSTRUCTION DAILY ACTIVITY REPORT

WORK PERFORMED TODAY

	LOCATION	BID ITEM NUMBER	DESCRIPTION OF WORK PERFORMED
1.	**Service Lines**		**Finished backfilling 531 and 537 on hill. Installed meter pit at House 27 Gulch Lane. Installing service line at 51 Gulch Lane.**
2.	**Gulch Lane**		**Have not found service line at House 35 Gulch Lane yet – continued digging with vac. House 31 – Excavated along the main and located service line, never did find curb stop (service line was located about about 15 feet southwest of driveway). Installed meter pit and curb stop.**
3.	**Miscellaneous Items**		**Turned fire hydrants to face East Hunter. Painted Bollards. Cleaned tank floor.**
4.			
5.			

REASON FOR NO WORK:

INFORMATION ON PROGRESS OF WORK – (Causes for delays, extent of delays, Plant, materials, etc.)

MATERIALS DELIVERED TO SITE

	DESCRIPTION
1.	
2.	
3.	

NOTE

INSPECTIONS AND TEST (Include comment pertaining to contractors activities)

	TESTS	RESULTS		COMMENT
1.	**NCI Density Testing**			
2.				

SAMPLES COLLECTED

	SAMPLE TYPE	SAMPLE ID	COMMENTS
1.			
2.			
3.			

CONSTRUCTION DAILY ACTIVITY REPORT

VERBAL INSTRUCTIONS GIVEN TO CONTRACTOR

	NAMES	INSTRUCTION	REACTION	REMARKS
1.				
2.				
3.				
4.				

NOTES –

DESIGN MODIFICATIONS

	DESCRIPTION OF MODIFICATION	REASON	ENGINEER APPROVAL?
1.			
2.			

VISITORS

	TIME	NAME	REPRESENTING	REMARKS
1.				
2.				
3.				
4.				
5.				

NOTES

- **Meter aprons – round?**
- **Called PAX representative about installing mixer. He said strain relief is inside mixer vessel and mixer is designed to be lowered with power cord and this will not rip out power cord or cause any damage.**
-
-

REMARKS – (Include controversial matters, information, instructions, disagreements, or any other miscellaneous remarks):

OVERSIGHT SIGNATURE:	DATE	PROJECT MANAGER INITIALS	DATE
Krista Hanson	**4/30/15**		

CONSTRUCTION DAILY ACTIVITY REPORT

TO: Montana Department of Environmental Quality Remediation Division - Mine Waste Cleanup Bureau Helena, MT Attn: Tom Henderson	REPORT NUMBER **#88**
PROJECT: Sand Coulee, water system replacement	DATE **Friday, 5-1-2015**
CONTRACTOR: Boland Construction Great Falls, MT	DEQ CONTRACT NUMBER
HAS ANYTHING DEVELOPED ON THE WORK WHICH MIGHT LEAD TO A CHANGE ORDER OR FINDING OF FACT? ☐ NO ☐ YES	WEATHER **Sunny**
HEALTH AND SAFETY Was a Job Safety Meeting held this date? ☐ NO ☐ YES	TEMPERATURE MINIMUM **55** MAXIMUM **67**

NUMBER OF CONTRACTOR'S EMPLOYEES				24 HOUR PRECIPITATION
SUPERVISORY	OPERATORS	LABORERS	TOTAL	**0**
Steve C.	**5**	**7**	**12**	

SUBCONTRACTORS ON SITE

COMPANY NAME	TOTAL EMPLOYEES
1. **United Electric**	**1**

List the major items of equipment

	units	EQUIPMENT DESCRIPTION	Hours	Comments	
1.	**2**	**Excavators**			
2.	**3**	**Mini Excavators**			
3.	**1**	**Frontend loader**			
4.	**2**	**Skidsteers**			
5.	**1**	**Soft Dig Vacuum**			
6.	**1**	**Concrete Mixer**			
7.					

Notes:

CONSTRUCTION DAILY ACTIVITY REPORT

WORK PERFORMED TODAY

	LOCATION	BID ITEM NUMBER	DESCRIPTION OF WORK PERFORMED
1.	**Service Lines**		**Finished service line at 51 Gulch Lane. Hooked up and weren't getting water - had to fix a leak between corp stop and meter pit. Finished House 31 Gulch Lane. Continued exploratory at House 35 Gulch Lane.**
2.	**Tank/Electrical**		**Filling tank over the weekend. Worked on well #4 electrical.**
3.	**Landscaping**		**Topsoil and sod – Log house 125 Dahn's, House 554 alley, House 540 alley.**
4.			
5.			

REASON FOR NO WORK:

INFORMATION ON PROGRESS OF WORK – (Causes for delays, extent of delays, Plant, materials, etc.)

MATERIALS DELIVERED TO SITE

	DESCRIPTION
1.	
2.	
3.	

NOTE

INSPECTIONS AND TEST (Include comment pertaining to contractors activities)

	TESTS	RESULTS		COMMENT
1.	**NCI Density Testing**			
2.				

SAMPLES COLLECTED

	SAMPLE TYPE	SAMPLE ID	COMMENTS
1.			
2.			
3.			

VERBAL INSTRUCTIONS GIVEN TO CONTRACTOR

	NAMES	INSTRUCTION	REACTION	REMARKS

1.				
2.				
3.				
4.				

NOTES –

DESIGN MODIFICATIONS

	DESCRIPTION OF MODIFICATION	REASON	ENGINEER APPROVAL?
1.			
2.			

VISITORS

	TIME	NAME	REPRESENTING	REMARKS
1.				
2.				
3.				
4.				
5.				

NOTES

-

-

REMARKS – (Include controversial matters, information, instructions, disagreements, or any other miscellaneous remarks):

OVERSIGHT SIGNATURE:	DATE	PROJECT MANAGER INITIALS	DATE
Krista Hanson	**5/1/15**		

CONSTRUCTION DAILY ACTIVITY REPORT

TO: Montana Department of Environmental Quality Remediation Division - Mine Waste Cleanup Bureau Helena, MT Attn: Tom Henderson	REPORT NUMBER **#90**
PROJECT: Sand Coulee, water system replacement	DATE **Tuesday, 5-5-2015**
CONTRACTOR: Boland Construction Great Falls, MT	DEQ CONTRACT NUMBER
HAS ANYTHING DEVELOPED ON THE WORK WHICH MIGHT LEAD TO A CHANGE ORDER OR FINDING OF FACT? ☐ NO ☐ YES	WEATHER **Sunny**
HEALTH AND SAFETY Was a Job Safety Meeting held this date? ☐ NO ☐ YES	TEMPERATURE MINIMUM **55** / MAXIMUM **67**

NUMBER OF CONTRACTOR'S EMPLOYEES				24 HOUR PRECIPITATION
SUPERVISORY	OPERATORS	LABORERS	TOTAL	**0**
Steve C.	**5**	**7**	**12**	

SUBCONTRACTORS ON SITE

COMPANY NAME	TOTAL EMPLOYEES
1.	

List the major items of equipment

	units	EQUIPMENT DESCRIPTION	Hours	Comments	
1.	**2**	**Excavators**			
2.	**3**	**Mini Excavators**			
3.	**1**	**Frontend loader**			
4.	**2**	**Skidsteers**			
5.	**1**	**Soft Dig Vacuum**			
6.	**1**	**Concrete Mixer**			
7.					

Notes:

CONSTRUCTION DAILY ACTIVITY REPORT

WORK PERFORMED TODAY

	LOCATION	BID ITEM NUMBER	DESCRIPTION OF WORK PERFORMED
1.	**Landscaping**		**Placed topsoil and sod at 70 Rosies Lane and 80 Dahn Lane. Finished landscaping at 51 Gulch Lane. Placed sod and topsoil at 49 Gulch Lane and fire hydrant on NE end of Gulch Lane.**
2.	**Meter Pit Aprons**		**Started digging out meter pits and placing forms and rebar for meter pit aprons in alley. Everything in alley to get a meter pit apron except 195 and 135 as these are in yards and are not likely to be driven over.**
3.	**House 35 Gulch Lane Exploratory**		**Continued exploratory at House 35 Gulch Lane – located main below rock wall, going to follow main to try to find corp stop.**
4.			
5.			

REASON FOR NO WORK:

INFORMATION ON PROGRESS OF WORK – (Causes for delays, extent of delays, Plant, materials, etc.)

MATERIALS DELIVERED TO SITE

	DESCRIPTION
1.	**Dickman delivered gravel and topsoil.**
2.	
3.	

NOTE

INSPECTIONS AND TEST (Include comment pertaining to contractors activities)

	TESTS	RESULTS		COMMENT
1.	**NCI Density Testing**			
2.				

SAMPLES COLLECTED

	SAMPLE TYPE	SAMPLE ID	COMMENTS
1.			
2.			
3.			

VERBAL INSTRUCTIONS GIVEN TO CONTRACTOR

CONSTRUCTION DAILY ACTIVITY REPORT

	NAMES	INSTRUCTION	REACTION	REMARKS
1.				
2.				
3.				
4.				

NOTES –

DESIGN MODIFICATIONS

	DESCRIPTION OF MODIFICATION	REASON	ENGINEER APPROVAL?
1.			
2.			

VISITORS

	TIME	NAME	REPRESENTING	REMARKS
1.				
2.				
3.				
4.				
5.				

NOTES

- **Cooper stopped by to coat well building but did not coat it due to core holes and dust on side of well building.**
- **Approved topsoil arrived on-site – old was removed.**
-

REMARKS – (Include controversial matters, information, instructions, disagreements, or any other miscellaneous remarks):

OVERSIGHT SIGNATURE:	DATE	PROJECT MANAGER INITIALS	DATE
Krista Hanson	**5/5/15**		

CONSTRUCTION DAILY ACTIVITY REPORT

TO: Montana Department of Environmental Quality Remediation Division - Mine Waste Cleanup Bureau Helena, MT Attn: Tom Henderson	REPORT NUMBER **#91**
PROJECT: Sand Coulee, water system replacement	DATE **Wednesday, 5-6-2015**
CONTRACTOR: Boland Construction Great Falls, MT	DEQ CONTRACT NUMBER
HAS ANYTHING DEVELOPED ON THE WORK WHICH MIGHT LEAD TO A CHANGE ORDER OR FINDING OF FACT? ☐ NO ☐ YES	WEATHER **Sunny**
HEALTH AND SAFETY Was a Job Safety Meeting held this date? ☐ NO ☐ YES	TEMPERATURE MINIMUM **55** / MAXIMUM **67**

NUMBER OF CONTRACTOR'S EMPLOYEES

SUPERVISORY	OPERATORS	LABORERS	TOTAL
Steve C.	**5**	**7**	**12**

24 HOUR PRECIPITATION: **0**

SUBCONTRACTORS ON SITE

	COMPANY NAME	TOTAL EMPLOYEES
1.		

List the major items of equipment

	units	EQUIPMENT DESCRIPTION	Hours	Comments	
1.	**2**	**Excavators**			
2.	**3**	**Mini Excavators**			
3.	**1**	**Frontend loader**			
4.	**2**	**Skidsteers**			
5.	**1**	**Soft Dig Vacuum**			
6.	**1**	**Concrete Mixer**			
7.					

Notes:

CONSTRUCTION DAILY ACTIVITY REPORT

WORK PERFORMED TODAY

	LOCATION	BID ITEM NUMBER	DESCRIPTION OF WORK PERFORMED
1.	**Landscaping**		**Placed topsoil and sod around meter pit at House 41 Gulch, around meter pit at House 57 Gulch, hydrant by house 57 Gulch, meter pit at house 49 Gulch, House 75 Gulch.**
2.	**Meter Pit Aprons**		**Poured concrete at House #554 alley. Dug out 6" for meter pit aprons, placed forms for meter pit aprons in alley. TDH will collect cylinders for strength testing.**
3.	**House 35 Gulch Lane Exploratory**		**Continued exploratory at House 35 Gulch Lane – located main below rock wall, going to follow main to try to find corp stop.**
4.			
5.			

REASON FOR NO WORK:

INFORMATION ON PROGRESS OF WORK – (Causes for delays, extent of delays, Plant, materials, etc.)

MATERIALS DELIVERED TO SITE

	DESCRIPTION
1.	
2.	
3.	

NOTE

INSPECTIONS AND TEST (Include comment pertaining to contractors activities)

	TESTS	RESULTS		COMMENT
1.	**NCI Density Testing**			
2.				

SAMPLES COLLECTED

	SAMPLE TYPE	SAMPLE ID	COMMENTS
1.			
2.			
3.			

VERBAL INSTRUCTIONS GIVEN TO CONTRACTOR

CONSTRUCTION DAILY ACTIVITY REPORT

	NAMES	INSTRUCTION	REACTION	REMARKS
1.				
2.				
3.				
4.				

NOTES –

DESIGN MODIFICATIONS

	DESCRIPTION OF MODIFICATION	REASON	ENGINEER APPROVAL?
1.			
2.			

VISITORS

	TIME	NAME	REPRESENTING	REMARKS
1.				
2.				
3.				
4.				
5.				

NOTES

- **Ralph is checking into feasibility and price of running electrical from old well building to new well building for hooking up well #5 (in lieu of getting different breaker and overload)**
- **Outside lights look like those in submittal…but I need to verify with electrician that they are LED - I cannot tell just by looking at them. Electrician hasn't been there since Wednesday, will ask when he is back.**
- **Talked to Steve about painting (Jake will not accept if any paint brush strokes are visible), cleaning sump drain, and getting concrete cylinders for meter pit aprons. TDH will come tomorrow.**
- **Meter pit aprons: 15 pits in alley + 12 around town: 80 Dahns, 90 Dahns, 105, 70, 85 Miners, 10, 20, 30, 40 Fortune, 37 ,39, 51 Gulch.**
- **Provided Ralph punch list of items to complete…still adding some items.**
-
-
-
-

REMARKS – (Include controversial matters, information, instructions, disagreements, or any other miscellaneous remarks):

OVERSIGHT SIGNATURE:	DATE	PROJECT MANAGER INITIALS	DATE
Krista Hanson	**5/6/15**		

CONSTRUCTION DAILY ACTIVITY REPORT

TO: Montana Department of Environmental Quality Remediation Division - Mine Waste Cleanup Bureau Helena, MT Attn: Tom Henderson	REPORT NUMBER **#92**
PROJECT: Sand Coulee, water system replacement	DATE **Thursday, 5-72015**
CONTRACTOR: Boland Construction Great Falls, MT	DEQ CONTRACT NUMBER
HAS ANYTHING DEVELOPED ON THE WORK WHICH MIGHT LEAD TO A CHANGE ORDER OR FINDING OF FACT? ☐ NO ☐ YES	WEATHER **Sunny**
HEALTH AND SAFETY Was a Job Safety Meeting held this date? ☐ NO ☐ YES	TEMPERATURE MINIMUM **55** MAXIMUM **67**

NUMBER OF CONTRACTOR'S EMPLOYEES				24 HOUR PRECIPITATION
SUPERVISORY	OPERATORS	LABORERS	TOTAL	**0**
Steve C.	**5**	**7**	**12**	

SUBCONTRACTORS ON SITE	
COMPANY NAME	TOTAL EMPLOYEES
1.	

List the major items of equipment

	units	EQUIPMENT DESCRIPTION	Hours	Comments	
1.	**2**	**Excavators**			
2.	**3**	**Mini Excavators**			
3.	**1**	**Frontend loader**			
4.	**2**	**Skidsteers**			
5.	**1**	**Soft Dig Vacuum**			
6.	**1**	**Concrete Mixer**			
7.					

Notes:

CONSTRUCTION DAILY ACTIVITY REPORT

WORK PERFORMED TODAY

	LOCATION	BID ITEM NUMBER	DESCRIPTION OF WORK PERFORMED
1.	**Landscaping**		**House 63 – placed topsoil and sod**
2.	**Meter Pit Aprons**		**Poured meter pit aprons in alley. TDH came and got samples, collected cylinders for strength testing. Slump – 3 ¼ and air 2.5…Meter pit aprons at 37 and 39 Gulch.**
3.	**House 35 Gulch Lane Exploratory**		**Continued exploratory at House 35 Gulch Lane – following main to try to find corp stop.**
4.			
5.			

REASON FOR NO WORK:

INFORMATION ON PROGRESS OF WORK – (Causes for delays, extent of delays, Plant, materials, etc.)

MATERIALS DELIVERED TO SITE

	DESCRIPTION
1.	
2.	
3.	

NOTE

INSPECTIONS AND TEST (Include comment pertaining to contractors activities)

	TESTS	RESULTS		COMMENT
1.	**NCI Density Testing**			
2.				

SAMPLES COLLECTED

	SAMPLE TYPE	SAMPLE ID	COMMENTS
1.			
2.			
3.			

VERBAL INSTRUCTIONS GIVEN TO CONTRACTOR

CONSTRUCTION DAILY ACTIVITY REPORT

	NAMES	INSTRUCTION	REACTION	REMARKS
1.				
2.				
3.				
4.				

NOTES –

DESIGN MODIFICATIONS

	DESCRIPTION OF MODIFICATION	REASON	ENGINEER APPROVAL?
1.			
2.			

VISITORS

	TIME	NAME	REPRESENTING	REMARKS
1.				
2.				
3.				
4.				
5.				

NOTES

1. What kind of check valve? I left message with Steve, 160 or 200 PSI probably bronze
2. How high and how far away should bollards for well 5 be? What about when pump is being pulled out, replaced and subsequent servicing, how much room do rigs need?? Removable bollards? I asked Chris Boland he drills the wells, he said he needs a 8' width… so maybe we need to do removable bollards, I have detail at office.
3. Frostless hydrants: well 4 already has one, can we just use that one for well 4? OK…does it have a smooth nose? Then we would just need one for well 5 (and 6, after well is drilled)…for 5, plans show it northeast of well about 10 feet, is this ok for location or we want it somewhere else? Put it in so it will not get hit

With sump drains start at elev 87.0 inside manhole, run at approximately 2% for 140LF to day light at coulee edge. I get elev of 85.5 at SE corner of tank fence and 84.0 at discharge.. concrete (or rock) collar at discharge…I would use HDPE pressure pipe

Setting PRV valves Monday.

I measured distances from edge of asphalt to trench on Gulch Lane and Dahns. Made notes on plan sheets, discussed with Ralph this am.

Larry Butler does not want cross-members on bollards. Said he will remove if put in.

REMARKS – (Include controversial matters, information, instructions, disagreements, or any other miscellaneous remarks):

OVERSIGHT SIGNATURE:	DATE	PROJECT MANAGER INITIALS	DATE
Krista Hanson	**5/7/15**		

CONSTRUCTION DAILY ACTIVITY REPORT

TO: Montana Department of Environmental Quality Remediation Division - Mine Waste Cleanup Bureau Helena, MT Attn: Tom Henderson	REPORT NUMBER **#93**
PROJECT: Sand Coulee, water system replacement	DATE **Friday, 5-11-2015**
CONTRACTOR: Boland Construction Great Falls, MT	DEQ CONTRACT NUMBER
HAS ANYTHING DEVELOPED ON THE WORK WHICH MIGHT LEAD TO A CHANGE ORDER OR FINDING OF FACT? ☐ NO ☐ YES	WEATHER **Overcast/rainy**
HEALTH AND SAFETY Was a Job Safety Meeting held this date? ☐ NO ☐ YES	TEMPERATURE MINIMUM **50** MAXIMUM **55**

NUMBER OF CONTRACTOR'S EMPLOYEES				24 HOUR PRECIPITATION
SUPERVISORY	OPERATORS	LABORERS	TOTAL	**0**
Steve C.	**5**	**7**	**12**	

SUBCONTRACTORS ON SITE

COMPANY NAME	TOTAL EMPLOYEES
1.	

List the major items of equipment

	units	EQUIPMENT DESCRIPTION	Hours	Comments	
1.	**2**	**Excavators**			
2.	**3**	**Mini Excavators**			
3.	**1**	**Frontend loader**			
4.	**2**	**Skidsteers**			
5.	**1**	**Soft Dig Vacuum**			
6.	**1**	**Concrete Mixer**			
7.					

Notes:

CONSTRUCTION DAILY ACTIVITY REPORT

WORK PERFORMED TODAY

	LOCATION	BID ITEM NUMBER	DESCRIPTION OF WORK PERFORMED
1.	**Landscaping**		**Finished House 63 – placed topsoil and sod. Placed topsoil and sod at meter pit and fire hydrant locations along Gulch Lane. Placed dryland seed at 516 East Hunter.**
2.	**Meter Pit Aprons**		**Poured meter pit aprons in alley. Placed forms for meter pits on Gulch Lane.**
3.	**House 35 Gulch Lane Exploratory**		**Continued exploratory at House 35 Gulch Lane – following main to try to find corp stop.**
4.			
5.			

REASON FOR NO WORK:

INFORMATION ON PROGRESS OF WORK – (Causes for delays, extent of delays, Plant, materials, etc.)

MATERIALS DELIVERED TO SITE

	DESCRIPTION
1.	
2.	
3.	

NOTE

INSPECTIONS AND TEST (Include comment pertaining to contractors activities)

	TESTS	RESULTS		COMMENT
1.	**NCI Density Testing**			
2.				

SAMPLES COLLECTED

	SAMPLE TYPE	SAMPLE ID	COMMENTS
1.			
2.			
3.			

VERBAL INSTRUCTIONS GIVEN TO CONTRACTOR

	NAMES	INSTRUCTION	REACTION	REMARKS

1.				
2.				
3.				
4.				

NOTES –

DESIGN MODIFICATIONS

	DESCRIPTION OF MODIFICATION	REASON	ENGINEER APPROVAL?
1.			
2.			

VISITORS

	TIME	NAME	REPRESENTING	REMARKS
1.				
2.				
3.				
4.				
5.				

NOTES

- **Kent showed me where he wanted frostless hydrant for well #5. (couple feet NE of flushing hydrant)**
-

REMARKS – (Include controversial matters, information, instructions, disagreements, or any other miscellaneous remarks):

OVERSIGHT SIGNATURE:	DATE	PROJECT MANAGER INITIALS	DATE
Krista Hanson	**5/11/15**		

CONSTRUCTION DAILY ACTIVITY REPORT

TO: Montana Department of Environmental Quality Remediation Division - Mine Waste Cleanup Bureau Helena, MT Attn: Tom Henderson	REPORT NUMBER **#94**
PROJECT: Sand Coulee, water system replacement	DATE **Monday, 5-11-2015**
CONTRACTOR: Boland Construction Great Falls, MT	DEQ CONTRACT NUMBER
HAS ANYTHING DEVELOPED ON THE WORK WHICH MIGHT LEAD TO A CHANGE ORDER OR FINDING OF FACT? ☐ NO ☐ YES	WEATHER **Overcast**
HEALTH AND SAFETY Was a Job Safety Meeting held this date? ☐ NO ☐ YES	TEMPERATURE MINIMUM **48** MAXIMUM **52**

NUMBER OF CONTRACTOR'S EMPLOYEES				24 HOUR PRECIPITATION
SUPERVISORY	OPERATORS	LABORERS	TOTAL	**0**
Steve C.	**5**	**7**	**12**	

SUBCONTRACTORS ON SITE	
COMPANY NAME	TOTAL EMPLOYEES
1. **Montana Waterworks**	**1**

List the major items of equipment

	units	EQUIPMENT DESCRIPTION	Hours	Comments	
1.	**2**	**Excavators**			
2.	**3**	**Mini Excavators**			
3.	**1**	**Frontend loader**			
4.	**2**	**Skidsteers**			
5.	**1**	**Soft Dig Vacuum**			
6.	**1**	**Concrete Mixer**			
7.					

Notes:

CONSTRUCTION DAILY ACTIVITY REPORT

WORK PERFORMED TODAY

	LOCATION	BID ITEM NUMBER	DESCRIPTION OF WORK PERFORMED
1.	**Landscaping/Misc**		**Placed grass seed along Gulch Lane. Removed bollard on East Hunter that was in the way of the fence. Put in air release valve in manhole near 40 Rosie's Lane.**
2.	**Meter Pit Aprons**		**Finished meter pit aprons in alley.**
3.	**House 35 Gulch Lane Exploratory**		**Excavated along main about 40 feet total in front of House 35. Excavated from about 5 feet northeast of garage in southwest direction to about 10 feet beyond edge of house. Backfilled and we are going to stop exploratory on this.**
4.	**PRV manhole**		**Rob with Montana Waterworks was here helping set PRV valves. Inlet pressure is 89 psi. Set 6" valve at 59 psi, set 1 ½ " valve at 69 psi. This gives house in alley at northeast end of town a pressure of about 85 psi. Kent checked pressure at this house.**
5.			

REASON FOR NO WORK:

INFORMATION ON PROGRESS OF WORK – (Causes for delays, extent of delays, Plant, materials, etc.)

MATERIALS DELIVERED TO SITE

	DESCRIPTION
1.	
2.	
3.	

NOTE

INSPECTIONS AND TEST (Include comment pertaining to contractors activities)

	TESTS	RESULTS		COMMENT
1.				
2.				

SAMPLES COLLECTED

	SAMPLE TYPE	SAMPLE ID	COMMENTS
1.			
2.			
3.			

VERBAL INSTRUCTIONS GIVEN TO CONTRACTOR

	NAMES	INSTRUCTION	REACTION	REMARKS
1.				
2.				
3.				
4.				

NOTES –

DESIGN MODIFICATIONS

	DESCRIPTION OF MODIFICATION	REASON	ENGINEER APPROVAL?
1.			
2.			

VISITORS

	TIME	NAME	REPRESENTING	REMARKS
1.				
2.				
3.				
4.				
5.				

NOTES

- **Sump drain in PRV manhole has a small amount of water (~ 1-2″). The sealant seems to have worked, sump drain has not filled with any more water.**
- **Everyone (except Forbes) now on new tank and new pipe. Tank is filled manually.**

REMARKS – (Include controversial matters, information, instructions, disagreements, or any other miscellaneous remarks):

OVERSIGHT SIGNATURE:	DATE	PROJECT MANAGER INITIALS	DATE
Krista Hanson	**5/11/15**		

CONSTRUCTION DAILY ACTIVITY REPORT

TO: Montana Department of Environmental Quality Remediation Division - Mine Waste Cleanup Bureau Helena, MT Attn: Tom Henderson	REPORT NUMBER **#95**
PROJECT: Sand Coulee, water system replacement	DATE **Tuesday, 5-12-2015**
CONTRACTOR: Boland Construction Great Falls, MT	DEQ CONTRACT NUMBER
HAS ANYTHING DEVELOPED ON THE WORK WHICH MIGHT LEAD TO A CHANGE ORDER OR FINDING OF FACT? ☐ NO ☐ YES	WEATHER **Overcast**
HEALTH AND SAFETY Was a Job Safety Meeting held this date? ☐ NO ☐ YES	TEMPERATURE MINIMUM **48** MAXIMUM **52**

NUMBER OF CONTRACTOR'S EMPLOYEES				24 HOUR PRECIPITATION
SUPERVISORY	OPERATORS	LABORERS	TOTAL	**0**
Steve C.	**2**	**5**	**7**	

SUBCONTRACTORS ON SITE	
COMPANY NAME	TOTAL EMPLOYEES
1. **Healy Ruff**	**1**
2. **United Electric**	**1**

List the major items of equipment

	units	EQUIPMENT DESCRIPTION	Hours	Comments	
1.	**2**	**Excavators**			
2.	**3**	**Mini Excavators**			
3.	**1**	**Frontend loader**			
4.	**2**	**Skidsteers**			
5.	**1**	**Soft Dig Vacuum**			
6.	**1**	**Concrete Mixer**			
7.					

Notes:

CONSTRUCTION DAILY ACTIVITY REPORT

WORK PERFORMED TODAY

	LOCATION	BID ITEM NUMBER	DESCRIPTION OF WORK PERFORMED
1.			
2.	**Meter Pit Aprons**		**Meter pit aprons around town, 80, 90 Dahns, post office, 105 Dade, 30, 40 Fortune, 525 East Hunter, 170 Dahns.**
3.	**House 35 Gulch Lane Exploratory**		**No exploratory today. Discussed at meeting. We will excavate along main about 10 more feet (from where we stopped) until main goes under rock wall.**
4.	**Inflow Meter Manhole/Overflow Manhole**		**Rob Balderson with Healy Ruff was setting transducers and pressure switch. Has to finish later because United Electric did not have the right wires.**
5.			

REASON FOR NO WORK:

INFORMATION ON PROGRESS OF WORK – (Causes for delays, extent of delays, Plant, materials, etc.)

MATERIALS DELIVERED TO SITE

	DESCRIPTION
1.	
2.	
3.	

NOTE

INSPECTIONS AND TEST (Include comment pertaining to contractors activities)

	TESTS	RESULTS		COMMENT
1.				
2.				

SAMPLES COLLECTED

	SAMPLE TYPE	SAMPLE ID	COMMENTS
1.			
2.			
3.			

CONSTRUCTION DAILY ACTIVITY REPORT

VERBAL INSTRUCTIONS GIVEN TO CONTRACTOR

	NAMES	INSTRUCTION	REACTION	REMARKS
1.				
2.				
3.				
4.				

NOTES –

DESIGN MODIFICATIONS

	DESCRIPTION OF MODIFICATION	REASON	ENGINEER APPROVAL?
1.			
2.			

VISITORS

	TIME	NAME	REPRESENTING	REMARKS
1.				
2.				
3.				
4.				
5.				

NOTES

- **Meeting with Boland, DEQ, Hydrometrics, Water District, and NCI. See meeting notes.**

REMARKS – (Include controversial matters, information, instructions, disagreements, or any other miscellaneous remarks):

OVERSIGHT SIGNATURE:	DATE	PROJECT MANAGER INITIALS	DATE
Krista Hanson	**5/12/15**		

CONSTRUCTION DAILY ACTIVITY REPORT

TO: Montana Department of Environmental Quality Remediation Division - Mine Waste Cleanup Bureau Helena, MT Attn: Tom Henderson	REPORT NUMBER **#96**
PROJECT: Sand Coulee, water system replacement	DATE **Wednesday, 5-11-2015**
CONTRACTOR: Boland Construction Great Falls, MT	DEQ CONTRACT NUMBER
HAS ANYTHING DEVELOPED ON THE WORK WHICH MIGHT LEAD TO A CHANGE ORDER OR FINDING OF FACT? ☐ NO ☐ YES	WEATHER **Overcast**
HEALTH AND SAFETY Was a Job Safety Meeting held this date? ☐ NO ☐ YES	TEMPERATURE MINIMUM **48** MAXIMUM **52**

NUMBER OF CONTRACTOR'S EMPLOYEES

SUPERVISORY	OPERATORS	LABORERS	TOTAL
Steve C.	**2**	**5**	**7**

24 HOUR PRECIPITATION: **0**

SUBCONTRACTORS ON SITE

COMPANY NAME	TOTAL EMPLOYEES
1. **Healy Ruff**	**1**
2. **United Electric**	**1**

List the major items of equipment

	units	EQUIPMENT DESCRIPTION	Hours	Comments	
1.	**1**	**Excavators**			
2.	**3**	**Mini Excavators**			
3.	**1**	**Frontend loader**			
4.	**2**	**Skidsteers**			
5.	**1**	**Soft Dig Vacuum**			
6.	**1**	**Concrete Mixer**			
7.					

Notes:

CONSTRUCTION DAILY ACTIVITY REPORT

WORK PERFORMED TODAY

	LOCATION	BID ITEM NUMBER	DESCRIPTION OF WORK PERFORMED
1.	**Landscaping**		**Sodding House 56 tank hill. Flattening Meyers road on hillside as requested by Meyers.**
2.	**Meter Pit Aprons**		**Framing and pouring meter pit aprons around town, 80, 90 Dahns, post office, 105 Dade, 30, 40 Fortune, 525 East Hunter, 170 Dahns, 522 E. Hunter.**
3.	**House 35 Gulch Lane Exploratory**		**No exploratory today.**
4.	**Electrical on tank hill**		**Working on electric in manholes – transducer in overflow manhole is reading tank level. Rob is getting the program running, transducers set, etc. Told Rob and electrician we are not doing temporary wiring. We will run pump 5 manually. Hooking up well 4 to its permanent location in well house. Put up gutter, sealing holes in wall.**
5.			

REASON FOR NO WORK:

INFORMATION ON PROGRESS OF WORK – (Causes for delays, extent of delays, Plant, materials, etc.)

MATERIALS DELIVERED TO SITE

	DESCRIPTION
1.	
2.	
3.	

NOTE

INSPECTIONS AND TEST (Include comment pertaining to contractors activities)

	TESTS	RESULTS		COMMENT
1.				
2.				

SAMPLES COLLECTED

	SAMPLE TYPE	SAMPLE ID	COMMENTS
1.			
2.			
3.			

CONSTRUCTION DAILY ACTIVITY REPORT

VERBAL INSTRUCTIONS GIVEN TO CONTRACTOR

	NAMES	INSTRUCTION	REACTION	REMARKS
1.				
2.				
3.				
4.				

NOTES –

DESIGN MODIFICATIONS

	DESCRIPTION OF MODIFICATION	REASON	ENGINEER APPROVAL?
1.			
2.			

VISITORS

	TIME	NAME	REPRESENTING	REMARKS
1.				
2.				
3.				
4.				
5.				

NOTES

- Pulling wires for well 5 tomorrow.
- Painter will be here Friday.

REMARKS – (Include controversial matters, information, instructions, disagreements, or any other miscellaneous remarks):

OVERSIGHT SIGNATURE:	DATE	PROJECT MANAGER INITIALS	DATE
Krista Hanson	**5/13/15**		

CONSTRUCTION DAILY ACTIVITY REPORT

TO: Montana Department of Environmental Quality Remediation Division - Mine Waste Cleanup Bureau Helena, MT Attn: Tom Henderson	REPORT NUMBER **#97**
PROJECT: Sand Coulee, water system replacement	DATE **Thursday, 5-14-2015**
CONTRACTOR: Boland Construction Great Falls, MT	DEQ CONTRACT NUMBER
HAS ANYTHING DEVELOPED ON THE WORK WHICH MIGHT LEAD TO A CHANGE ORDER OR FINDING OF FACT? ☐ NO ☐ YES	WEATHER **Overcast**
HEALTH AND SAFETY Was a Job Safety Meeting held this date? ☐ NO ☐ YES	TEMPERATURE MINIMUM **48** MAXIMUM **52**

NUMBER OF CONTRACTOR'S EMPLOYEES

SUPERVISORY	OPERATORS	LABORERS	TOTAL
Steve C.	**2**	**5**	**7**

24 HOUR PRECIPITATION: **0**

SUBCONTRACTORS ON SITE

COMPANY NAME	TOTAL EMPLOYEES
1. **Healy Ruff**	**1**
2. **United Electric**	**1**

List the major items of equipment

	units	EQUIPMENT DESCRIPTION	Hours	Comments	
1.	**1**	**Excavators**			
2.	**2**	**Mini Excavators**			
3.	**1**	**Frontend loader**			
4.	**2**	**Skidsteers**			
5.	**1**	**Soft Dig Vacuum**			
6.	**1**	**Concrete Mixer**			
7.	**1**	**Dozer**			

Notes:

CONSTRUCTION DAILY ACTIVITY REPORT

WORK PERFORMED TODAY

	LOCATION	BID ITEM NUMBER	DESCRIPTION OF WORK PERFORMED
1.			
2.	**Meter Pit Aprons**		**Framing and pouring meter pit aprons around town, 80, 90 Dahns, post office, 105 Dade, 30, 40 Fortune, 525 East Hunter, 170 Dahns, 522 E. Hunter.**
3.	**House 35 Gulch Lane Exploratory**		**No exploratory today.**
4.	**Top of Hill**		**Coring holes in inflow meter manhole for sump drain and pressure relief lines. Will probably put pipe in tomorrow. Running lines out to coulee at 2% slope to elevation 84 at discharge.**
5.			

REASON FOR NO WORK:

INFORMATION ON PROGRESS OF WORK – (Causes for delays, extent of delays, Plant, materials, etc.)

MATERIALS DELIVERED TO SITE

	DESCRIPTION
1.	
2.	
3.	

NOTE

INSPECTIONS AND TEST (Include comment pertaining to contractors activities)

	TESTS	RESULTS		COMMENT
1.				
2.				

SAMPLES COLLECTED

	SAMPLE TYPE	SAMPLE ID	COMMENTS
1.			
2.			
3.			

CONSTRUCTION DAILY ACTIVITY REPORT

VERBAL INSTRUCTIONS GIVEN TO CONTRACTOR

	NAMES	INSTRUCTION	REACTION	REMARKS
1.				
2.				
3.				
4.				

NOTES –

DESIGN MODIFICATIONS

	DESCRIPTION OF MODIFICATION	REASON	ENGINEER APPROVAL?
1.			
2.			

VISITORS

	TIME	NAME	REPRESENTING	REMARKS
1.				
2.				
3.				
4.				
5.				

NOTES

- **40 Rosie's Lane was seeded and blocked off**
- **Kent talked to Meyers – going to put in some metal posts that are high enough to see when he is backing up that he won't hit fire hydrant.**
- **Rocks in PR valves prevented them from closing – Fixed PR valves from 3:00 to 6:00**
- **Wattles for erosion prevention on tank hill arrived**
- **Pump in well 4 is 3-phase (120, 207, 120)…only set up for 2 phases, can't run well 4**
-

REMARKS – (Include controversial matters, information, instructions, disagreements, or any other miscellaneous remarks):

OVERSIGHT SIGNATURE:	DATE	PROJECT MANAGER INITIALS	DATE
Krista Hanson	**5/14/15**		

CONSTRUCTION DAILY ACTIVITY REPORT

TO: Montana Department of Environmental Quality Remediation Division - Mine Waste Cleanup Bureau Helena, MT Attn: Tom Henderson	REPORT NUMBER **#98**
PROJECT: Sand Coulee, water system replacement	DATE **Friday, 5-15-2015**
CONTRACTOR: Boland Construction Great Falls, MT	DEQ CONTRACT NUMBER
HAS ANYTHING DEVELOPED ON THE WORK WHICH MIGHT LEAD TO A CHANGE ORDER OR FINDING OF FACT? ☐ NO ☐ YES	WEATHER **Overcast/rained**
HEALTH AND SAFETY Was a Job Safety Meeting held this date? ☐ NO ☐ YES	TEMPERATURE MINIMUM **48** MAXIMUM **50**

NUMBER OF CONTRACTOR'S EMPLOYEES				24 HOUR PRECIPITATION
SUPERVISORY	OPERATORS	LABORERS	TOTAL	**0**
Steve C.	**2**	**5**	**7**	

SUBCONTRACTORS ON SITE

COMPANY NAME	TOTAL EMPLOYEES
1. **Healy Ruff**	**1**
2. **United Electric**	**1**

List the major items of equipment

	units	EQUIPMENT DESCRIPTION	Hours	Comments	
1.	**1**	**Excavators**			
2.	**2**	**Mini Excavators**			
3.	**1**	**Frontend loader**			
4.	**2**	**Skidsteers**			
5.	**1**	**Soft Dig Vacuum**			
6.	**1**	**Concrete Mixer**			
7.	**1**	**Dozer**			

Notes:

CONSTRUCTION DAILY ACTIVITY REPORT

WORK PERFORMED TODAY

	LOCATION	BID ITEM NUMBER	DESCRIPTION OF WORK PERFORMED
1.	**Landscaping**		**Grass seeding tank hill. 70% done from top. Ran out had to send out for more for remainder of hill and other areas. Laid sod at house 56 and 63 upper west (D-8).**
2.	**Meter Pit Aprons**		**Postponing remaining meter pit aprons until drier weather. Remaining meter pits to be poured are House 39 and 37 and 51 Gulch. Clean up around job.**
3.	**House 35 Gulch Lane Exploratory**		**No exploratory today.**
4.	**Top of Hill**		**Installing wattles on hill side.**
5.			

REASON FOR NO WORK:

INFORMATION ON PROGRESS OF WORK – (Causes for delays, extent of delays, Plant, materials, etc.)

MATERIALS DELIVERED TO SITE

	DESCRIPTION
1.	
2.	
3.	

NOTE

INSPECTIONS AND TEST (Include comment pertaining to contractors activities)

	TESTS	RESULTS		COMMENT
1.				
2.				

SAMPLES COLLECTED

	SAMPLE TYPE	SAMPLE ID	COMMENTS
1.			
2.			
3.			

CONSTRUCTION DAILY ACTIVITY REPORT

VERBAL INSTRUCTIONS GIVEN TO CONTRACTOR

	NAMES	INSTRUCTION	REACTION	REMARKS
1.				
2.				
3.				
4.				

NOTES –

DESIGN MODIFICATIONS

	DESCRIPTION OF MODIFICATION	REASON	ENGINEER APPROVAL?
1.			
2.			

VISITORS

	TIME	NAME	REPRESENTING	REMARKS
1.				
2.				
3.				
4.				
5.				

NOTES

- **Remaining digging (sump drain and pressure relief lines and 2 water lines below) and concrete work postponed until better weather.**
- **All meter pit aprons in alley are complete.**
- **Did not paint well house today.**
- **AC repaving for House #53 on hillside – dug up to house through parking area and lawn – need to replace.**
- **PR valves are working, pressures remained as set.**
-

REMARKS – (Include controversial matters, information, instructions, disagreements, or any other miscellaneous remarks):

OVERSIGHT SIGNATURE:	DATE	PROJECT MANAGER INITIALS	DATE
Brad Haden	**5/15/15**		

CONSTRUCTION DAILY ACTIVITY REPORT

TO: Montana Department of Environmental Quality Remediation Division - Mine Waste Cleanup Bureau Helena, MT Attn: Tom Henderson	REPORT NUMBER **#99**
PROJECT: Sand Coulee, water system replacement	DATE **Monday, 5-18-2015**
CONTRACTOR: Boland Construction Great Falls, MT	DEQ CONTRACT NUMBER
HAS ANYTHING DEVELOPED ON THE WORK WHICH MIGHT LEAD TO A CHANGE ORDER OR FINDING OF FACT? ☐ NO ☐ YES	WEATHER **Overcast**
HEALTH AND SAFETY Was a Job Safety Meeting held this date? ☐ NO ☐ YES	TEMPERATURE MINIMUM **48** MAXIMUM **50**

NUMBER OF CONTRACTOR'S EMPLOYEES				24 HOUR PRECIPITATION
SUPERVISORY	OPERATORS	LABORERS	TOTAL	**0**
Steve C.	**2**	**5**	**7**	

SUBCONTRACTORS ON SITE	
COMPANY NAME	TOTAL EMPLOYEES
1. **Painter** 2.	**1**

List the major items of equipment

	units	EQUIPMENT DESCRIPTION	Hours	Comments	
1.	**1**	**Excavators**			
2.	**2**	**Mini Excavators**			
3.	**1**	**Frontend loader**			
4.	**2**	**Skidsteers**			
5.	**1**	**Soft Dig Vacuum**			
6.	**1**	**Concrete Mixer**			
7.	**1**	**Dozer**			

Notes:

CONSTRUCTION DAILY ACTIVITY REPORT

WORK PERFORMED TODAY

	LOCATION	BID ITEM NUMBER	DESCRIPTION OF WORK PERFORMED
1.	**Valve boxes/hydrant by church**		**Raised valve boxes and hydrant by church.**
2.	**Forbes/Service Line**		**Hooked up Forbes to main. Thad (DEQ attorney) was present. Forbes was not there. Broke fiber – left partially backfilled until 3 Rivers could repair fiber (they said tomorrow). Installed 2 bollards with metal posts cemented in bollards – we can screw flags into metal threads so they are visible from vehicle and easier not to hit them when backing up. Meyers is happy with this.**
3.	**House 35 Gulch Lane Exploratory**		**No exploratory today.**
4.	**Top of Hill**		**Painter acid etched concrete floor. He filled in small holes/defects in floor. Began with block filler on walls. Began at bottom of wall and was about 6 inches from floor at end of day with the block filler. He removed the outlet and light switch covers and grouted any voids around outlets and light switches.**
5.			

REASON FOR NO WORK:

INFORMATION ON PROGRESS OF WORK – (Causes for delays, extent of delays, Plant, materials, etc.)

MATERIALS DELIVERED TO SITE

	DESCRIPTION
1.	
2.	
3.	

NOTE

INSPECTIONS AND TEST (Include comment pertaining to contractors activities)

	TESTS	RESULTS		COMMENT
1.				
2.				

SAMPLES COLLECTED

	SAMPLE TYPE	SAMPLE ID	COMMENTS
1.			

2.			
3.			

VERBAL INSTRUCTIONS GIVEN TO CONTRACTOR

	NAMES	INSTRUCTION	REACTION	REMARKS
1.				
2.				
3.				
4.				

NOTES –

DESIGN MODIFICATIONS

	DESCRIPTION OF MODIFICATION	REASON	ENGINEER APPROVAL?
1.			
2.			

VISITORS

	TIME	NAME	REPRESENTING	REMARKS
1.	**Ralph/Jake**		**NCI**	
2.	**Thad**		**DEQ attorney**	
3.				
4.				
5.				

NOTES

- **Ralph and Jake her today to meet with painter and discuss painting of well house and piping in manholes.**
- *** We don't need to paint front of panels – sides of panels get painted**
- *** Conduits get painted**
- *** Brass fittings we paint – Bolt threads are the first to corrode, it is very important they get paint.**
- *** Pipe stands get painted – blue or tan is okay, all piping gets painted blue**
- *** Need to patch core drill hole and switch out cast grate.**
- *** Shelf that dehumidifier sits on gets paint (not installed yet)**
- *** Floor gets grout slope – then sand color paint (I need to verify this)**
- *** Piping in fire hall is copper – this gets pain. Etching used for galvanized works on copper**
- *** I will check after each coat in well building and PRV manhole and make sure everything is coated**
- **Finished with all meter pit aprons.**
- **Ramneked lids under PRV manhole and flow meter manhole.**
-

REMARKS – (Include controversial matters, information, instructions, disagreements, or any other miscellaneous remarks):

OVERSIGHT SIGNATURE:	DATE	PROJECT MANAGER INITIALS	DATE
Krista Hanson	**5/18/15**		

CONSTRUCTION DAILY ACTIVITY REPORT

TO: Montana Department of Environmental Quality Remediation Division - Mine Waste Cleanup Bureau Helena, MT Attn: Tom Henderson	REPORT NUMBER **#100**
PROJECT: Sand Coulee, water system replacement	DATE **Tuesday, 5-19-2015**
CONTRACTOR: Boland Construction Great Falls, MT	DEQ CONTRACT NUMBER
HAS ANYTHING DEVELOPED ON THE WORK WHICH MIGHT LEAD TO A CHANGE ORDER OR FINDING OF FACT? ☐ NO ☐ YES	WEATHER **Overcast**
HEALTH AND SAFETY Was a Job Safety Meeting held this date? ☐ NO ☐ YES	TEMPERATURE MINIMUM **48** MAXIMUM **50**

NUMBER OF CONTRACTOR'S EMPLOYEES				24 HOUR PRECIPITATION
SUPERVISORY	OPERATORS	LABORERS	TOTAL	**0**
Steve C.	**2**	**5**	**7**	

SUBCONTRACTORS ON SITE	
COMPANY NAME	TOTAL EMPLOYEES
1. **Painter (Not here today)**	**1**
2.	

List the major items of equipment

	units	EQUIPMENT DESCRIPTION	Hours	Comments	
1.	**1**	**Excavators**			
2.	**2**	**Mini Excavators**			
3.	**1**	**Frontend loader**			
4.	**2**	**Skidsteers**			
5.	**1**	**Soft Dig Vacuum**			
6.	**1**	**Concrete Mixer**			
7.	**1**	**Dozer**			

Notes:

CONSTRUCTION DAILY ACTIVITY REPORT

WORK PERFORMED TODAY

	LOCATION	BID ITEM NUMBER	DESCRIPTION OF WORK PERFORMED
1.	**Miscellaneous**		**Putting gravel around meter pit aprons on Gulch. Removed grates in manholes. Grouted pipe boots in PRV manhole. Putting 2nd coat of paint on bollards. Swept streets.**
2.	**Forbes/Service Line**		**3 Rivers here fixing fiber line. Boland backfilled. Brad density tested.**
3.	**House 35 Gulch Lane Exploratory**		**No exploratory today.**
4.	**Top of Hill**		**Digging in pressure relief and sump pump drain lines. 2% grade to coulee. About 120 feet. Dug about 50 feet at 4:00.**
5.			

REASON FOR NO WORK:

INFORMATION ON PROGRESS OF WORK – (Causes for delays, extent of delays, Plant, materials, etc.)

MATERIALS DELIVERED TO SITE

	DESCRIPTION
1.	**Dickman delivered 10 cu yd. of pipe bedding (for sump drain and pressure relief lines)**
2.	
3.	

NOTE

INSPECTIONS AND TEST (Include comment pertaining to contractors activities)

	TESTS	RESULTS		COMMENT
1.	**NCI Density testing**			
2.				

SAMPLES COLLECTED

	SAMPLE TYPE	SAMPLE ID	COMMENTS
1.			
2.			
3.			

CONSTRUCTION DAILY ACTIVITY REPORT

VERBAL INSTRUCTIONS GIVEN TO CONTRACTOR

	NAMES	INSTRUCTION	REACTION	REMARKS
1.				
2.				
3.				
4.				

NOTES –

DESIGN MODIFICATIONS

	DESCRIPTION OF MODIFICATION	REASON	ENGINEER APPROVAL?
1.			
2.			

VISITORS

	TIME	NAME	REPRESENTING	REMARKS
1.				
2.				
3.				
4.				
5.				

NOTES

- **Dickman delivered 10 cu yd. of pipe bedding (for sump drain and pressure relief lines)**
-
-
-
-

REMARKS – (Include controversial matters, information, instructions, disagreements, or any other miscellaneous remarks):

OVERSIGHT SIGNATURE:	DATE	PROJECT MANAGER INITIALS	DATE
Krista Hanson	**5/19/15**		

CONSTRUCTION DAILY ACTIVITY REPORT

TO: Montana Department of Environmental Quality Remediation Division - Mine Waste Cleanup Bureau Helena, MT Attn: Tom Henderson	REPORT NUMBER **#101**
PROJECT: Sand Coulee, water system replacement	DATE **Wednesday, 5-20-2015**
CONTRACTOR: Boland Construction Great Falls, MT	DEQ CONTRACT NUMBER
HAS ANYTHING DEVELOPED ON THE WORK WHICH MIGHT LEAD TO A CHANGE ORDER OR FINDING OF FACT? ☐ NO ☐ YES	WEATHER **Sunny**
HEALTH AND SAFETY Was a Job Safety Meeting held this date? ☐ NO ☐ YES	TEMPERATURE MINIMUM **50** MAXIMUM **55**

NUMBER OF CONTRACTOR'S EMPLOYEES				24 HOUR PRECIPITATION
SUPERVISORY	OPERATORS	LABORERS	TOTAL	**0**
Steve C.	**1**	**5**	**6**	

SUBCONTRACTORS ON SITE

COMPANY NAME	TOTAL EMPLOYEES
1. **Painter**	**1**
2.	

List the major items of equipment

	units	EQUIPMENT DESCRIPTION	Hours	Comments	
1.	**1**	**Excavators**			
2.	**2**	**Mini Excavators**			
3.	**1**	**Frontend loader**			
4.	**2**	**Skidsteers**			
5.	**1**	**Soft Dig Vacuum**			
6.	**1**	**Concrete Mixer**			
7.	**1**	**Dozer**			

Notes:

CONSTRUCTION DAILY ACTIVITY REPORT

WORK PERFORMED TODAY

	LOCATION	BID ITEM NUMBER	DESCRIPTION OF WORK PERFORMED
1.	**Miscellaneous**		**Fixed Hoot fence by well building. Grading and sodding by PRV manhole.**
2.	**Painter – Well House**		**Painted sides of panels and conduit. Using cover stain on galvanized. Cleaned metal with vinegar. Almost done with block filler on walls.**
3.	**House 35 Gulch Lane Exploratory**		**No exploratory today.**
4.	**Top of Hill**		**Finished installing pressure relief and sump pump drain lines. Steve and Rick are backfilling and compacting around inflow meter manhole. Density testing was performed and passed. Hooked up well #4 to new 6" main at the 6"x 2" tee. Installed check valve.**
5.			

REASON FOR NO WORK:

INFORMATION ON PROGRESS OF WORK – (Causes for delays, extent of delays, Plant, materials, etc.)

MATERIALS DELIVERED TO SITE

	DESCRIPTION
1.	**Dickman delivered 10 cu yd. of pipe bedding (for sump drain and pressure relief lines) – Tuesday and wed.**
2.	
3.	

NOTE

INSPECTIONS AND TEST (Include comment pertaining to contractors activities)

	TESTS	RESULTS		COMMENT
1.	**NCI Density testing**			
2.				

SAMPLES COLLECTED

	SAMPLE TYPE	SAMPLE ID	COMMENTS
1.			
2.			
3.			

CONSTRUCTION DAILY ACTIVITY REPORT

VERBAL INSTRUCTIONS GIVEN TO CONTRACTOR

	NAMES	INSTRUCTION	REACTION	REMARKS
1.				
2.				
3.				
4.				

NOTES –

DESIGN MODIFICATIONS

	DESCRIPTION OF MODIFICATION	REASON	ENGINEER APPROVAL?
1.			
2.			

VISITORS

	TIME	NAME	REPRESENTING	REMARKS
1.				
2.				
3.				
4.				
5.				

NOTES

- **Dickman delivered 10 cu yd. of pipe bedding (for sump drain and pressure relief lines)- Tues. and Wed.**
- **Discussed with Steve and Ralph grouting slope in bottom of manholes – yes we want this**
- **Threshold for interior door is here**
- **Went through roadway repair with Steve. He says Redimix can crown roads.**
- **1 light in well house not working**
- **Concrete cylinder test results came back for meter pit aprons. 7 days – 6800 psi. Slump – 3.25" Air – 2.3%**
- **Measured slope on sump drain and pressure relief lines – 2%**
-
-
-
-
-

REMARKS – (Include controversial matters, information, instructions, disagreements, or any other miscellaneous remarks):

OVERSIGHT SIGNATURE:	DATE	PROJECT MANAGER INITIALS	DATE
Krista Hanson	**5/20/15**		

CONSTRUCTION DAILY ACTIVITY REPORT

TO: Montana Department of Environmental Quality Remediation Division - Mine Waste Cleanup Bureau Helena, MT Attn: Tom Henderson	REPORT NUMBER **#102**
PROJECT: Sand Coulee, water system replacement	DATE **Thursday, 5-21-2015**
CONTRACTOR: Boland Construction Great Falls, MT	DEQ CONTRACT NUMBER
HAS ANYTHING DEVELOPED ON THE WORK WHICH MIGHT LEAD TO A CHANGE ORDER OR FINDING OF FACT? ☐ NO ☐ YES	WEATHER **Sunny**
HEALTH AND SAFETY Was a Job Safety Meeting held this date? ☐ NO ☐ YES	TEMPERATURE MINIMUM **55** / MAXIMUM **60**

NUMBER OF CONTRACTOR'S EMPLOYEES				24 HOUR PRECIPITATION
SUPERVISORY	OPERATORS	LABORERS	TOTAL	**0**
Steve C.	**1**	**5**	**6**	

SUBCONTRACTORS ON SITE	
COMPANY NAME	TOTAL EMPLOYEES
1. **Painter** 2.	**1**

List the major items of equipment

	units	EQUIPMENT DESCRIPTION	Hours	Comments	
1.	**1**	**Excavators**			
2.	**2**	**Mini Excavators**			
3.	**1**	**Frontend loader**			
4.	**1**	**Skidsteer**			
5.	**1**	**Soft Dig Vacuum**			
6.	**1**	**Concrete Mixer**			
7.	**1**	**Dozer**			

Notes:

CONSTRUCTION DAILY ACTIVITY REPORT

WORK PERFORMED TODAY

	LOCATION	BID ITEM NUMBER	DESCRIPTION OF WORK PERFORMED
1.	**Miscellaneous**		**Grading and sodding by PRV manhole.**
2.	**Painter – Well House**		**Painted 1st coat of Epoxy-Ester Enamel on walls. Coated electrical conduits with 1st coat of Primer sic-phosphate enriched. Taping doors.**
3.	**House 35 Gulch Lane Exploratory**		**No exploratory today.**
4.	**Top of Hill**		**Backfilled and compacted over pressure relief and sump pump drain lines. Brad density tested. Tied well #5 into new tank permanently – removed temporary saddle and bypass line feeding new tank, and tied 3" line from well #5 directly to 3" valve.**
5.			

REASON FOR NO WORK:

INFORMATION ON PROGRESS OF WORK – (Causes for delays, extent of delays, Plant, materials, etc.)

MATERIALS DELIVERED TO SITE

	DESCRIPTION
1.	
2.	
3.	

NOTE

INSPECTIONS AND TEST (Include comment pertaining to contractors activities)

	TESTS	RESULTS		COMMENT
1.	**NCI Density testing**			
2.				

SAMPLES COLLECTED

	SAMPLE TYPE	SAMPLE ID	COMMENTS
1.			
2.			
3.			

CONSTRUCTION DAILY ACTIVITY REPORT

VERBAL INSTRUCTIONS GIVEN TO CONTRACTOR

	NAMES	INSTRUCTION	REACTION	REMARKS
1.				
2.				
3.				
4.				

NOTES –

DESIGN MODIFICATIONS

	DESCRIPTION OF MODIFICATION	REASON	ENGINEER APPROVAL?
1.			
2.			

VISITORS

	TIME	NAME	REPRESENTING	REMARKS
1.				
2.				
3.				
4.				
5.				

NOTES

- **Meeting with DEQ, Hydrometrics, Boland, District, and NCI. See meeting notes.**
- **Pump and VFDs onsite next Wednesday. Install new pump next Thursday.**
-
-
-
-
-

REMARKS – (Include controversial matters, information, instructions, disagreements, or any other miscellaneous remarks):

OVERSIGHT SIGNATURE:	DATE	PROJECT MANAGER INITIALS	DATE
Krista Hanson	**5/21/15**		

CONSTRUCTION DAILY ACTIVITY REPORT

TO: Montana Department of Environmental Quality Remediation Division - Mine Waste Cleanup Bureau Helena, MT Attn: Tom Henderson	REPORT NUMBER **#104**
PROJECT: Sand Coulee, water system replacement	DATE **Wednesday, 5-27-2015**
CONTRACTOR: Boland Construction Great Falls, MT	DEQ CONTRACT NUMBER
HAS ANYTHING DEVELOPED ON THE WORK WHICH MIGHT LEAD TO A CHANGE ORDER OR FINDING OF FACT? ☐ NO ☐ YES	WEATHER **Overcast/rained**
HEALTH AND SAFETY Was a Job Safety Meeting held this date? ☐ NO ☐ YES	TEMPERATURE MINIMUM **45** MAXIMUM **50**

NUMBER OF CONTRACTOR'S EMPLOYEES

SUPERVISORY	OPERATORS	LABORERS	TOTAL
Steve C.	**1**	**5**	**6**

24 HOUR PRECIPITATION: **0**

SUBCONTRACTORS ON SITE

COMPANY NAME	TOTAL EMPLOYEES
1. **Painter**	**1**
2.	

List the major items of equipment

	units	EQUIPMENT DESCRIPTION	Hours	Comments	
1.	**2**	**Mini Excavators**			
2.	**1**	**Frontend loader**			
3.	**1**	**Skidsteer**			
4.	**1**	**Concrete Mixer**			
5.	**1**	**Dozer**			
6.					
7.					

Notes:

CONSTRUCTION DAILY ACTIVITY REPORT

WORK PERFORMED TODAY

	LOCATION	BID ITEM NUMBER	DESCRIPTION OF WORK PERFORMED
1.	**Miscellaneous**		**Fixing fabric around tank that had been ripped from electricians trenching to tank and manholes. Grading around tank. Cleaning streets.**
2.	**Painter – Well House**		**Finished 2nd coat on well house walls over the weekend. Put primer and 2 coats on piping in manholes over the weekend. Applied 1st coat on well house floor. Added sand finish paint additive to give rough surface to floor. Remaining work includes applying 2nd coat on well house floor and applying 3 coats to missed spots in manhole piping.**
3.			
4.			
5.			

REASON FOR NO WORK:

INFORMATION ON PROGRESS OF WORK – (Causes for delays, extent of delays, Plant, materials, etc.)

MATERIALS DELIVERED TO SITE

	DESCRIPTION
1.	
2.	
3.	

NOTE

INSPECTIONS AND TEST (Include comment pertaining to contractors activities)

	TESTS	RESULTS		COMMENT
1.				
2.				

SAMPLES COLLECTED

	SAMPLE TYPE	SAMPLE ID	COMMENTS
1.			
2.			

3.			

VERBAL INSTRUCTIONS GIVEN TO CONTRACTOR

	NAMES	INSTRUCTION	REACTION	REMARKS
1.				
2.				
3.				
4.				

NOTES –

DESIGN MODIFICATIONS

	DESCRIPTION OF MODIFICATION	REASON	ENGINEER APPROVAL?
1.			
2.			

VISITORS

	TIME	NAME	REPRESENTING	REMARKS
1.				
2.				
3.				
4.				
5.				

NOTES

- **Yesterday (Tuesday May 26) no work due to rain.**
- **Outside light on well house needs fixed – detached from building.**
- **Inside light needs fixed – not working.**
- **I worked on developing plan for street repair.**
- **Installing new pump tomorrow.**
-
-
-
-

REMARKS – (Include controversial matters, information, instructions, disagreements, or any other miscellaneous remarks):

OVERSIGHT SIGNATURE:	DATE	PROJECT MANAGER INITIALS	DATE
Krista Hanson	**5/27/15**		

CONSTRUCTION DAILY ACTIVITY REPORT

TO: Montana Department of Environmental Quality Remediation Division - Mine Waste Cleanup Bureau Helena, MT Attn: Tom Henderson	REPORT NUMBER **#103**
PROJECT: Sand Coulee, water system replacement	DATE **Friday, 5-22-2015**
CONTRACTOR: Boland Construction Great Falls, MT	DEQ CONTRACT NUMBER
HAS ANYTHING DEVELOPED ON THE WORK WHICH MIGHT LEAD TO A CHANGE ORDER OR FINDING OF FACT? ☐ NO ☐ YES	WEATHER **Sunny**
HEALTH AND SAFETY Was a Job Safety Meeting held this date? ☐ NO ☐ YES	TEMPERATURE MINIMUM **55** MAXIMUM **60**

NUMBER OF CONTRACTOR'S EMPLOYEES				24 HOUR PRECIPITATION
SUPERVISORY	OPERATORS	LABORERS	TOTAL	**0**
Steve C.	**1**	**5**	**6**	

SUBCONTRACTORS ON SITE

COMPANY NAME	TOTAL EMPLOYEES
1. **Painter**	**1**
2.	

List the major items of equipment

	units	EQUIPMENT DESCRIPTION	Hours	Comments	
1.	**1**	**Excavators**			
2.	**2**	**Mini Excavators**			
3.	**1**	**Frontend loader**			
4.	**1**	**Skidsteer**			
5.	**1**	**Soft Dig Vacuum**			
6.	**1**	**Concrete Mixer**			
7.	**1**	**Dozer**			

Notes:

CONSTRUCTION DAILY ACTIVITY REPORT

WORK PERFORMED TODAY

	LOCATION	BID ITEM NUMBER	DESCRIPTION OF WORK PERFORMED
1.	**Miscellaneous**		**Backfilled and compacted over well #5 tie in. Brad density tested. Sodding around PRV manhole. Picked rocks around fire hall.**
2.	**Painter – Well House**		**Painted doors and conduit and sides of panels with 1st coat of alkyd enamel.**
3.	**House 35 Gulch Lane Exploratory**		**No exploratory today.**
4.	**Fire Hall**		**Moved location of fire hydrant by fire hall. Installed about 26 feet of 6" pipe to new location of fire hydrant. Installed a 45 degree bend, used bedding. Went through asphalt – needs replaced.**
5.			

REASON FOR NO WORK:

INFORMATION ON PROGRESS OF WORK – (Causes for delays, extent of delays, Plant, materials, etc.)

MATERIALS DELIVERED TO SITE

	DESCRIPTION
1.	
2.	
3.	

NOTE

INSPECTIONS AND TEST (Include comment pertaining to contractors activities)

	TESTS	RESULTS		COMMENT
1.	**NCI Density testing**			
2.				

SAMPLES COLLECTED

	SAMPLE TYPE	SAMPLE ID	COMMENTS
1.			
2.			
3.			

CONSTRUCTION DAILY ACTIVITY REPORT

VERBAL INSTRUCTIONS GIVEN TO CONTRACTOR

	NAMES	INSTRUCTION	REACTION	REMARKS
1.				
2.				
3.				
4.				

NOTES –

DESIGN MODIFICATIONS

	DESCRIPTION OF MODIFICATION	REASON	ENGINEER APPROVAL?
1.			
2.			

VISITORS

	TIME	NAME	REPRESENTING	REMARKS
1.				
2.				
3.				
4.				
5.				

NOTES

-
-
-
-
-

REMARKS – (Include controversial matters, information, instructions, disagreements, or any other miscellaneous remarks):

OVERSIGHT SIGNATURE:	DATE	PROJECT MANAGER INITIALS	DATE
Krista Hanson	**5/22/15**		

CONSTRUCTION DAILY ACTIVITY REPORT

TO: Montana Department of Environmental Quality Remediation Division - Mine Waste Cleanup Bureau Helena, MT Attn: Tom Henderson	REPORT NUMBER **#105**
PROJECT: Sand Coulee, water system replacement	DATE **Thursday, 5-28-2015**
CONTRACTOR: Boland Construction Great Falls, MT	DEQ CONTRACT NUMBER
HAS ANYTHING DEVELOPED ON THE WORK WHICH MIGHT LEAD TO A CHANGE ORDER OR FINDING OF FACT? ☐ NO ☐ YES	WEATHER **Overcast/rained**
HEALTH AND SAFETY Was a Job Safety Meeting held this date? ☐ NO ☐ YES	TEMPERATURE MINIMUM **45** MAXIMUM **50**

NUMBER OF CONTRACTOR'S EMPLOYEES

SUPERVISORY	OPERATORS	LABORERS	TOTAL
Steve C.	**1**	**5**	**6**

24 HOUR PRECIPITATION: **0**

SUBCONTRACTORS ON SITE

COMPANY NAME	TOTAL EMPLOYEES
1. **Painter**	**1**
2. **United Electric**	**2**
3. **Boland Drilling**	**3**

List the major items of equipment

	units	EQUIPMENT DESCRIPTION	Hours	Comments	
1.	**2**	**Mini Excavators**			
2.	**1**	**Frontend loader**			
3.	**1**	**Skidsteer**			
4.	**1**	**Concrete Mixer**			
5.	**1**	**Dozer**			
6.					
7.					

Notes:

CONSTRUCTION DAILY ACTIVITY REPORT

WORK PERFORMED TODAY

	LOCATION	BID ITEM NUMBER	DESCRIPTION OF WORK PERFORMED
1.	**Miscellaneous**		**Cleaning streets. Started pouring rain at 10:30 so Boland left.**
2.	**Pump Installation**		**Drillers removed old pump. The pump on-site was the wrong pump - 12 stage instead of 13 stage. Correct pump is coming from Billings tonight and will be installed tomorrow. Everyone left site about 3:30.**
3.	**Painter**		**Finished 2nd coat on floor in well house. Worked on inflow meter manhole piping about 2 hours and worked on PRV manhole piping about an hour. Finished all well house and manhole piping painting.**
4.			
5.			

REASON FOR NO WORK:

INFORMATION ON PROGRESS OF WORK – (Causes for delays, extent of delays, Plant, materials, etc.)

Boland got rained out. Left about 10:30. Drillers still here, removing old pump and installing new pump.

MATERIALS DELIVERED TO SITE

	DESCRIPTION
1.	
2.	
3.	

NOTE

INSPECTIONS AND TEST (Include comment pertaining to contractors activities)

	TESTS	RESULTS		COMMENT
1.				
2.				

SAMPLES COLLECTED

	SAMPLE TYPE	SAMPLE ID	COMMENTS
1.			
2.			

3.			

VERBAL INSTRUCTIONS GIVEN TO CONTRACTOR

	NAMES	INSTRUCTION	REACTION	REMARKS
1.				
2.				
3.				
4.				

NOTES –

DESIGN MODIFICATIONS

	DESCRIPTION OF MODIFICATION	REASON	ENGINEER APPROVAL?
1.			
2.			

VISITORS

	TIME	NAME	REPRESENTING	REMARKS
1.	**8:00**	**Ashton**	**Hydrometrics**	**Here to observe pump installation.**
2.				
3.				
4.				
5.				

NOTES

- **Outside light on well house needs fixed – detached from building. Electricians Fixed.**
- **Inside light needs fixed – not working. Electricians Fixed.**
- **Electricians ran wires to disconnect for well #5.**
- **Ashton with Hydrometrics here to observe pump installation.**
- **Fencing, weather stripping, thresholds, and work bench is scheduled for next Tuesday.**
-
-
-

REMARKS – (Include controversial matters, information, instructions, disagreements, or any other miscellaneous remarks):

OVERSIGHT SIGNATURE:	DATE	PROJECT MANAGER INITIALS	DATE
Krista Hanson	**5/28/15**		

CONSTRUCTION DAILY ACTIVITY REPORT

TO: Montana Department of Environmental Quality Remediation Division - Mine Waste Cleanup Bureau Helena, MT Attn: Tom Henderson	REPORT NUMBER **#106**
PROJECT: Sand Coulee, water system replacement	DATE **Friday, 5-29-2015**
CONTRACTOR: Boland Construction Great Falls, MT	DEQ CONTRACT NUMBER
HAS ANYTHING DEVELOPED ON THE WORK WHICH MIGHT LEAD TO A CHANGE ORDER OR FINDING OF FACT? ☐ NO ☐ YES	WEATHER **Overcast**
HEALTH AND SAFETY Was a Job Safety Meeting held this date? ☐ NO ☐ YES	TEMPERATURE MINIMUM **45** MAXIMUM **50**

NUMBER OF CONTRACTOR'S EMPLOYEES

SUPERVISORY	OPERATORS	LABORERS	TOTAL
Steve C.	**1**	**5**	**6**

24 HOUR PRECIPITATION: **0**

SUBCONTRACTORS ON SITE

COMPANY NAME	TOTAL EMPLOYEES
1. **United Electric**	**2**
2. **Boland Drilling**	**3**
3.	

List the major items of equipment

	units	EQUIPMENT DESCRIPTION	Hours	Comments	
1.	**2**	**Mini Excavators**			
2.	**1**	**Frontend loader**			
3.	**1**	**Skidsteer**			
4.	**1**	**Concrete Mixer**			
5.	**1**	**Dozer**			
6.					
7.					

Notes:

CONSTRUCTION DAILY ACTIVITY REPORT

WORK PERFORMED TODAY

	LOCATION	BID ITEM NUMBER	DESCRIPTION OF WORK PERFORMED
1.	**Miscellaneous**		**Cleaning streets.**
2.	**Pump Installation**		**New pump arrived on-site. 14 stage with one empty stage. Installed new pump at depth of 421 feet bgs. Installed 1 ½" Sch. 40 pvc (330 psi) for transducer at 414 feet bgs. Installed single check valve at 214 feet bgs. There is also a check valve in the pump. Electrician arrived on-site at 3:00 and got pump working. 6:00 – chlorinated well – calculated concentration was 100 ppm. Ashton with Hydrometrics will be here tomorrow (Saturday) to test chlorine level. Boland will flush and Kent will deliver sample for bacteria testing on Sunday.**
3.			
4.			
5.			

REASON FOR NO WORK:

INFORMATION ON PROGRESS OF WORK – (Causes for delays, extent of delays, Plant, materials, etc.)

MATERIALS DELIVERED TO SITE

	DESCRIPTION
1.	
2.	
3.	

NOTE

INSPECTIONS AND TEST (Include comment pertaining to contractors activities)

	TESTS	RESULTS		COMMENT
1.				
2.				

SAMPLES COLLECTED

	SAMPLE TYPE	SAMPLE ID	COMMENTS
1.			
2.			
3.			

CONSTRUCTION DAILY ACTIVITY REPORT

VERBAL INSTRUCTIONS GIVEN TO CONTRACTOR

	NAMES	INSTRUCTION	REACTION	REMARKS
1.				
2.				
3.				
4.				

NOTES –

DESIGN MODIFICATIONS

	DESCRIPTION OF MODIFICATION	REASON	ENGINEER APPROVAL?
1.			
2.			

VISITORS

	TIME	NAME	REPRESENTING	REMARKS
1.	**8:00**	**Ashton**	**Hydrometrics**	**Here to observe pump installation.**
2.				
3.				
4.				
5.				

NOTES

- .
-
-
-

REMARKS – (Include controversial matters, information, instructions, disagreements, or any other miscellaneous remarks):

OVERSIGHT SIGNATURE:	DATE	PROJECT MANAGER INITIALS	DATE
Krista Hanson	**5/29/15**		

CONSTRUCTION DAILY ACTIVITY REPORT

TO: Montana Department of Environmental Quality Remediation Division - Mine Waste Cleanup Bureau Helena, MT Attn: Tom Henderson	REPORT NUMBER **#107**
PROJECT: Sand Coulee, water system replacement	DATE **Monday, 6-1-2015**
CONTRACTOR: Boland Construction Great Falls, MT	DEQ CONTRACT NUMBER
HAS ANYTHING DEVELOPED ON THE WORK WHICH MIGHT LEAD TO A CHANGE ORDER OR FINDING OF FACT? ☐ NO ☐ YES	WEATHER **Overcast/rained in the afternoon**
HEALTH AND SAFETY Was a Job Safety Meeting held this date? ☐ NO ☐ YES	TEMPERATURE MINIMUM **45** MAXIMUM **50**

NUMBER OF CONTRACTOR'S EMPLOYEES

SUPERVISORY	OPERATORS	LABORERS	TOTAL
Steve C.	**1**	**5**	**6**

24 HOUR PRECIPITATION: **0**

SUBCONTRACTORS ON SITE

COMPANY NAME	TOTAL EMPLOYEES
1. **United Electric**	**1**
2. **Three Rivers**	**2**
3. **Healy Ruff – Rob. B**	**1**

List the major items of equipment

	units	EQUIPMENT DESCRIPTION	Hours	Comments	
1.	**2**	**Mini Excavators**			
2.	**1**	**Frontend loader**			
3.	**1**	**Skidsteer**			
4.	**1**	**Concrete Mixer**			
5.	**1**	**Dozer**			
6.					
7.					

Notes:

CONSTRUCTION DAILY ACTIVITY REPORT

WORK PERFORMED TODAY			
	LOCATION	BID ITEM NUMBER	DESCRIPTION OF WORK PERFORMED
1.	**Top of Hill**		**Installed transducer in well #5 at 414 feet bgs. Marked cable with orange tape every 50 feet for 400 feet, then every 10 feet (2 pieces of tape). Rob. B and electrician worked on getting PLC and VFD to communicate. Graded around tank and did general clean up so fence can be installed tomorrow.**
2.	**Town**		**Cleaned streets**
3.			
4.			
5.			

REASON FOR NO WORK:

INFORMATION ON PROGRESS OF WORK – (Causes for delays, extent of delays, Plant, materials, etc.)

MATERIALS DELIVERED TO SITE	
	DESCRIPTION
1.	
2.	
3.	

NOTE

INSPECTIONS AND TEST (Include comment pertaining to contractors activities)

	TESTS	RESULTS		COMMENT
1.				
2.				

SAMPLES COLLECTED

	SAMPLE TYPE	SAMPLE ID	COMMENTS
1.			
2.			
3.			

VERBAL INSTRUCTIONS GIVEN TO CONTRACTOR				
	NAMES	INSTRUCTION	REACTION	REMARKS

1.				
2.				
3.				
4.				

NOTES –

DESIGN MODIFICATIONS

	DESCRIPTION OF MODIFICATION	REASON	ENGINEER APPROVAL?
1.			
2.			

VISITORS

	TIME	NAME	REPRESENTING	REMARKS
1.				
2.				
3.				
4.				
5.				

NOTES

- .
-
-
-

REMARKS – (Include controversial matters, information, instructions, disagreements, or any other miscellaneous remarks):

OVERSIGHT SIGNATURE:	DATE	PROJECT MANAGER INITIALS	DATE
Krista Hanson	**6/1/15**		

CONSTRUCTION DAILY ACTIVITY REPORT

TO: Montana Department of Environmental Quality Remediation Division - Mine Waste Cleanup Bureau Helena, MT Attn: Tom Henderson	REPORT NUMBER **#108**
PROJECT: Sand Coulee, water system replacement	DATE **Tuesday, 6-2-2015**
CONTRACTOR: Boland Construction Great Falls, MT	DEQ CONTRACT NUMBER
HAS ANYTHING DEVELOPED ON THE WORK WHICH MIGHT LEAD TO A CHANGE ORDER OR FINDING OF FACT? ☐ NO ☐ YES	WEATHER **Overcast/rained in the afternoon**
HEALTH AND SAFETY Was a Job Safety Meeting held this date? ☐ NO ☐ YES	TEMPERATURE MINIMUM **45** MAXIMUM **50**

NUMBER OF CONTRACTOR'S EMPLOYEES

SUPERVISORY	OPERATORS	LABORERS	TOTAL
Steve C.	**1**	**5**	**6**

24 HOUR PRECIPITATION: **0**

SUBCONTRACTORS ON SITE

COMPANY NAME	TOTAL EMPLOYEES
1. **United Electric**	**1**
2. **Healy Ruff – Rob. B**	**1**
3. **Great Falls Fence**	**3**

List the major items of equipment

	units	EQUIPMENT DESCRIPTION	Hours	Comments	
1.	**2**	**Mini Excavators**			
2.	**1**	**Frontend loader**			
3.	**1**	**Skidsteer**			
4.	**1**	**Concrete Mixer**			
5.	**1**	**Dozer**			
6.	**1**	**Hand Whacker**			
7.		**1 Roller, 1 Street Brush**			

Notes:

CONSTRUCTION DAILY ACTIVITY REPORT

WORK PERFORMED TODAY

	LOCATION	BID ITEM NUMBER	DESCRIPTION OF WORK PERFORMED
1.	**Top of Hill**		**Electrician finished disconnect box below well head and wiring for transducer. Rob. B worked on telemetry. Great Falls Fence dug holes and poured concrete for fence posts.**
2.	**Town**		**Excavated 6" over main line on Miners Lane and laid 6" gravel – compacted gravel with hand whacker and rolled. Density testing passed.**
3.			
4.			
5.			

REASON FOR NO WORK:

INFORMATION ON PROGRESS OF WORK – (Causes for delays, extent of delays, Plant, materials, etc.)

MATERIALS DELIVERED TO SITE

	DESCRIPTION
1.	
2.	
3.	

NOTE

INSPECTIONS AND TEST (Include comment pertaining to contractors activities)

	TESTS	RESULTS		COMMENT
1.	**Density Testing**			
2.				

SAMPLES COLLECTED

	SAMPLE TYPE	SAMPLE ID	COMMENTS
1.			
2.			
3.			

VERBAL INSTRUCTIONS GIVEN TO CONTRACTOR

	NAMES	INSTRUCTION	REACTION	REMARKS
1.				

2.				
3.				
4.				

NOTES –

DESIGN MODIFICATIONS

	DESCRIPTION OF MODIFICATION	REASON	ENGINEER APPROVAL?
1.			
2.			

VISITORS

	TIME	NAME	REPRESENTING	REMARKS
1.				
2.				
3.				
4.				
5.				

NOTES

- **Meeting with Boland, NCI, Hydrometrics, DEQ, and Water District . See meeting notes.**
-
-
-

REMARKS – (Include controversial matters, information, instructions, disagreements, or any other miscellaneous remarks):

OVERSIGHT SIGNATURE:	DATE	PROJECT MANAGER INITIALS	DATE
Krista Hanson	**6/2/15**		

CONSTRUCTION DAILY ACTIVITY REPORT

TO: Montana Department of Environmental Quality Remediation Division - Mine Waste Cleanup Bureau Helena, MT Attn: Tom Henderson	REPORT NUMBER **#109**
PROJECT: Sand Coulee, water system replacement	DATE **Wednesday, 6-3-2015**
CONTRACTOR: Boland Construction Great Falls, MT	DEQ CONTRACT NUMBER
HAS ANYTHING DEVELOPED ON THE WORK WHICH MIGHT LEAD TO A CHANGE ORDER OR FINDING OF FACT? ☐ NO ☐ YES	WEATHER **Sunny**
HEALTH AND SAFETY Was a Job Safety Meeting held this date? ☐ NO ☐ YES	TEMPERATURE MINIMUM **65** MAXIMUM **75**

NUMBER OF CONTRACTOR'S EMPLOYEES				24 HOUR PRECIPITATION
SUPERVISORY	OPERATORS	LABORERS	TOTAL	**0**
Steve C.	**1**	**5**	**6**	

SUBCONTRACTORS ON SITE

COMPANY NAME	TOTAL EMPLOYEES
1. **no subs today**	

List the major items of equipment

	units	EQUIPMENT DESCRIPTION	Hours	Comments	
1.	**1**	**Mini Excavator**			
2.	**2**	**Frontend loaders**			
3.	**1**	**Skidsteer**			
4.	**1**	**Bulldog**			
5.	**1**	**Roller**			
6.					
7.					

Notes:

CONSTRUCTION DAILY ACTIVITY REPORT

WORK PERFORMED TODAY

	LOCATION	BID ITEM NUMBER	DESCRIPTION OF WORK PERFORMED
1.	**Top of Hill**		**Added more wattles to hill. Cleaned floor and sump drain of flow meter manhole. Ordered base board for well house.**
2.	**Town**		**Excavated 6" over main line at farthest NE end of town (Road connecting alley and Dahn's lane) and started down the alley. Compacted gravel with roller and density tested. 2 guys on loaders, one excavating, one rolling, and one hand digging.**
3.			
4.			
5.			

REASON FOR NO WORK:

INFORMATION ON PROGRESS OF WORK – (Causes for delays, extent of delays, Plant, materials, etc.)

MATERIALS DELIVERED TO SITE

	DESCRIPTION
1.	
2.	
3.	

NOTE

INSPECTIONS AND TEST (Include comment pertaining to contractors activities)

	TESTS	RESULTS		COMMENT
1.	**Density Testing**			
2.				

SAMPLES COLLECTED

	SAMPLE TYPE	SAMPLE ID	COMMENTS
1.			
2.			
3.			

VERBAL INSTRUCTIONS GIVEN TO CONTRACTOR

	NAMES	INSTRUCTION	REACTION	REMARKS

1.				
2.				
3.				
4.				

NOTES –

DESIGN MODIFICATIONS

	DESCRIPTION OF MODIFICATION	REASON	ENGINEER APPROVAL?
1.			
2.			

VISITORS

	TIME	NAME	REPRESENTING	REMARKS
1.				
2.				
3.				
4.				
5.				

NOTES

-

-

-

REMARKS – (Include controversial matters, information, instructions, disagreements, or any other miscellaneous remarks):

OVERSIGHT SIGNATURE:	DATE	PROJECT MANAGER INITIALS	DATE
Krista Hanson	**6/3/15**		

CONSTRUCTION DAILY ACTIVITY REPORT

TO: Montana Department of Environmental Quality Remediation Division - Mine Waste Cleanup Bureau Helena, MT Attn: Tom Henderson	REPORT NUMBER **#110**
PROJECT: Sand Coulee, water system replacement	DATE **Thursday, 6-4-2015**
CONTRACTOR: Boland Construction Great Falls, MT	DEQ CONTRACT NUMBER
HAS ANYTHING DEVELOPED ON THE WORK WHICH MIGHT LEAD TO A CHANGE ORDER OR FINDING OF FACT? ☐ NO ☐ YES	WEATHER **Sunny**
HEALTH AND SAFETY Was a Job Safety Meeting held this date? ☐ NO ☐ YES	TEMPERATURE MINIMUM **65** / MAXIMUM **75**

NUMBER OF CONTRACTOR'S EMPLOYEES

SUPERVISORY	OPERATORS	LABORERS	TOTAL
Steve C.	**1**	**5**	**6**

24 HOUR PRECIPITATION: **0**

SUBCONTRACTORS ON SITE

COMPANY NAME	TOTAL EMPLOYEES
1. **Detail Construction**	**2**

List the major items of equipment

	units	EQUIPMENT DESCRIPTION	Hours	Comments	
1.	**1**	**Mini Excavator**			
2.	**2**	**Frontend loaders**			
3.	**1**	**Skidsteer**			
4.	**1**	**Bulldog**			
5.	**1**	**Roller**			
6.					
7.					

Notes:

CONSTRUCTION DAILY ACTIVITY REPORT

WORK PERFORMED TODAY

	LOCATION	BID ITEM NUMBER	DESCRIPTION OF WORK PERFORMED
1.	**Top of Hill**		**Detail Construction installed wall base, work bench, and thresholds. Need door handle on inside door.**
2.	**Town**		**Gravel surfacing in alley. About 75% done in alley. String lined NE end of Dahn's road for asphalt resurfacing. Boland will start saw cutting edge of existing asphalt, excavating down 13" (for 10" BC and 3" asphalt) and prepping this area for asphalt.**
3.			
4.			
5.			

REASON FOR NO WORK:

INFORMATION ON PROGRESS OF WORK – (Causes for delays, extent of delays, Plant, materials, etc.)

MATERIALS DELIVERED TO SITE

	DESCRIPTION
1.	
2.	
3.	

NOTE

INSPECTIONS AND TEST (Include comment pertaining to contractors activities)

	TESTS	RESULTS		COMMENT
1.	**Density Testing**			
2.				

SAMPLES COLLECTED

	SAMPLE TYPE	SAMPLE ID	COMMENTS
1.			
2.			
3.			

VERBAL INSTRUCTIONS GIVEN TO CONTRACTOR

	NAMES	INSTRUCTION	REACTION	REMARKS

1.				
2.				
3.				
4.				

NOTES –

DESIGN MODIFICATIONS

	DESCRIPTION OF MODIFICATION	REASON	ENGINEER APPROVAL?
1.			
2.			

VISITORS

	TIME	NAME	REPRESENTING	REMARKS
1.				
2.				
3.				
4.				
5.				

NOTES

- **Gravel surfacing in alley. About 75% done in alley. Pay width is 8 feet wide at 6 inches deep. Ralph said okay to go a little less depth and get wider. At 5" we can go 9.6' wide.**
- **Ralph approved millings from city for tank hill road and Kent's road (if there is enough)**
-
-

REMARKS – (Include controversial matters, information, instructions, disagreements, or any other miscellaneous remarks):

OVERSIGHT SIGNATURE:	DATE	PROJECT MANAGER INITIALS	DATE
Krista Hanson	**6/4/15**		

CONSTRUCTION DAILY ACTIVITY REPORT

TO: Montana Department of Environmental Quality Remediation Division - Mine Waste Cleanup Bureau Helena, MT Attn: Tom Henderson	REPORT NUMBER **#111**
PROJECT: Sand Coulee, water system replacement	DATE **Friday, 6-5-2015**
CONTRACTOR: Boland Construction Great Falls, MT	DEQ CONTRACT NUMBER
HAS ANYTHING DEVELOPED ON THE WORK WHICH MIGHT LEAD TO A CHANGE ORDER OR FINDING OF FACT? ☐ NO ☐ YES	WEATHER **Sunny**
HEALTH AND SAFETY Was a Job Safety Meeting held this date? ☐ NO ☐ YES	TEMPERATURE MINIMUM **70** MAXIMUM **80**

NUMBER OF CONTRACTOR'S EMPLOYEES

SUPERVISORY	OPERATORS	LABORERS	TOTAL
Steve C.	**1**	**5**	**6**

24 HOUR PRECIPITATION: **0**

SUBCONTRACTORS ON SITE

COMPANY NAME	TOTAL EMPLOYEES
1.	

List the major items of equipment

	units	EQUIPMENT DESCRIPTION	Hours	Comments	
1.	**1**	**Mini Excavator**			
2.	**2**	**Frontend loaders**			
3.	**1**	**Skidsteer**			
4.	**1**	**Bulldog**			
5.	**1**	**Roller**			
6.					
7.					

Notes:

CONSTRUCTION DAILY ACTIVITY REPORT

WORK PERFORMED TODAY

	LOCATION	BID ITEM NUMBER	DESCRIPTION OF WORK PERFORMED
1.	**Top of Hill**		**Taping well house to prep for spraying.**
2.	**Town**		**Finished gravel surfacing in alley. Brad density testing. 1 test not passed, it was re-rolled. Saw cutting asphalt on NE end of Dahns.**
3.			
4.			
5.			

REASON FOR NO WORK:

INFORMATION ON PROGRESS OF WORK – (Causes for delays, extent of delays, Plant, materials, etc.)

MATERIALS DELIVERED TO SITE

	DESCRIPTION
1.	**Dickman delivered gravel.**
2.	
3.	

NOTE

INSPECTIONS AND TEST (Include comment pertaining to contractors activities)

	TESTS	RESULTS		COMMENT
1.	**Density Testing**			
2.				

SAMPLES COLLECTED

	SAMPLE TYPE	SAMPLE ID	COMMENTS
1.			
2.			
3.			

VERBAL INSTRUCTIONS GIVEN TO CONTRACTOR

	NAMES	INSTRUCTION	REACTION	REMARKS
1.				
2.				

3.				
4.				

NOTES –

DESIGN MODIFICATIONS

	DESCRIPTION OF MODIFICATION	REASON	ENGINEER APPROVAL?
1.			
2.			

VISITORS

	TIME	NAME	REPRESENTING	REMARKS
1.				
2.				
3.				
4.				
5.				

NOTES

- **Keys are here.**
- **2 Grates are here.**
- **Spray painted, string lined asphalt re-surfacing for SW end of Dahns.**
-
-

REMARKS – (Include controversial matters, information, instructions, disagreements, or any other miscellaneous remarks):

OVERSIGHT SIGNATURE:	DATE	PROJECT MANAGER INITIALS	DATE
Krista Hanson	**6/5/15**		

CONSTRUCTION DAILY ACTIVITY REPORT

TO: Montana Department of Environmental Quality Remediation Division - Mine Waste Cleanup Bureau Helena, MT Attn: Tom Henderson	REPORT NUMBER **#112**
PROJECT: Sand Coulee, water system replacement	DATE **Monday, 6-8-2015**
CONTRACTOR: Boland Construction Great Falls, MT	DEQ CONTRACT NUMBER
HAS ANYTHING DEVELOPED ON THE WORK WHICH MIGHT LEAD TO A CHANGE ORDER OR FINDING OF FACT? ☐ NO ☐ YES	WEATHER **Sunny**
HEALTH AND SAFETY Was a Job Safety Meeting held this date? ☐ NO ☐ YES	TEMPERATURE MINIMUM **70** MAXIMUM **80**

NUMBER OF CONTRACTOR'S EMPLOYEES

SUPERVISORY	OPERATORS	LABORERS	TOTAL
Steve C.	**5**	**2**	**7**

24 HOUR PRECIPITATION: **0**

SUBCONTRACTORS ON SITE

COMPANY NAME	TOTAL EMPLOYEES
1. **Great Falls Fence**	**2**

List the major items of equipment

	units	EQUIPMENT DESCRIPTION	Hours	Comments	
1.	**2**	**Mini Excavators**			
2.	**3**	**Frontend loaders**			
3.	**1**	**Skidsteer**			
4.	**1**	**Bulldog**			
5.	**1**	**Roller**			
6.					
7.					

Notes:

CONSTRUCTION DAILY ACTIVITY REPORT

WORK PERFORMED TODAY

	LOCATION	BID ITEM NUMBER	DESCRIPTION OF WORK PERFORMED
1.	**Top of Hill**		**Fence guys installed top rail, coil spring tension wire on bottom of fence, and 3 strands of barb wire.**
2.	**NE end of Dahns**		**Prepping Dahn's Lane for paving. Started at far NE end of Dahns and completed about 150 feet so far. This NE portion of Dahns is broken into 12', 9', 6' widths. Paver can do 8' and wider so all but about 128 feet of NE end of Dahns can be done with paver. The 6' wide portion will be patchwork. Excavating 13" depth, placing 10" of gravel and compacting with roller in 2 lifts. Density testing about every 100 feet on subgrade and gravel. Test on subgrade didn't pass so it was rolled and then it passed.**
3.	**SW end of Dahns**		**Started at Dahn's and Miners intersection. Have completed about 50 feet so far. Most of SW portion of Dahns is less than 8 feet so it will be patchwork. Excavating 13" depth, placing 10" of gravel and compacting with bulldog in 3 lifts. Density testing about every 100 feet on subgrade and gravel. One test on SW end didn't pass. It was about 3-4% drier than optimum, wetted it down and re-rolled with bulldog.**
4.			
5.			

REASON FOR NO WORK:

INFORMATION ON PROGRESS OF WORK – (Causes for delays, extent of delays, Plant, materials, etc.)

MATERIALS DELIVERED TO SITE

	DESCRIPTION
1.	**Dickman delivered gravel.**
2.	
3.	

NOTE

INSPECTIONS AND TEST (Include comment pertaining to contractors activities)

	TESTS	RESULTS		COMMENT
1.	**Density Testing**			
2.				

SAMPLES COLLECTED

	SAMPLE TYPE	SAMPLE ID	COMMENTS

1.			
2.			
3.			

VERBAL INSTRUCTIONS GIVEN TO CONTRACTOR

	NAMES	INSTRUCTION	REACTION	REMARKS
1.				
2.				
3.				
4.				

NOTES –

DESIGN MODIFICATIONS

	DESCRIPTION OF MODIFICATION	REASON	ENGINEER APPROVAL?
1.			
2.			

VISITORS

	TIME	NAME	REPRESENTING	REMARKS
1.				
2.				
3.				
4.				
5.				

NOTES

-

-

REMARKS – (Include controversial matters, information, instructions, disagreements, or any other miscellaneous remarks):

OVERSIGHT SIGNATURE:	DATE	PROJECT MANAGER INITIALS	DATE
Krista Hanson	**6/8/15**		

CONSTRUCTION DAILY ACTIVITY REPORT

TO: Montana Department of Environmental Quality Remediation Division - Mine Waste Cleanup Bureau Helena, MT Attn: Tom Henderson	REPORT NUMBER **#113**
PROJECT: Sand Coulee, water system replacement	DATE **Tuesday, 6-9-2015**
CONTRACTOR: Boland Construction Great Falls, MT	DEQ CONTRACT NUMBER
HAS ANYTHING DEVELOPED ON THE WORK WHICH MIGHT LEAD TO A CHANGE ORDER OR FINDING OF FACT? ☐ NO ☐ YES	WEATHER **Sunny**
HEALTH AND SAFETY Was a Job Safety Meeting held this date? ☐ NO ☐ YES	TEMPERATURE MINIMUM **70** MAXIMUM **80**

NUMBER OF CONTRACTOR'S EMPLOYEES

SUPERVISORY	OPERATORS	LABORERS	TOTAL
Steve C.	**5**	**2**	**7**

24 HOUR PRECIPITATION: **0**

SUBCONTRACTORS ON SITE

COMPANY NAME	TOTAL EMPLOYEES
1. **Great Falls Fence**	**2**
2. **Detail Construction**	**1**

List the major items of equipment

	units	EQUIPMENT DESCRIPTION	Hours	Comments	
1.	**2**	**Mini Excavators**			
2.	**3**	**Frontend loaders**			
3.	**1**	**Skidsteer**			
4.	**1**	**Bulldog**			
5.	**1**	**Roller**			
6.					
7.					

Notes:

CONSTRUCTION DAILY ACTIVITY REPORT

WORK PERFORMED TODAY

	LOCATION	BID ITEM NUMBER	DESCRIPTION OF WORK PERFORMED
1.	**Top of Hill**		**Finished fence. Detail Construction finished weather stripping on double doors.**
2.	**NE end of Dahns**		**Prepping Dahn's Lane for paving. Started at far NE end of Dahns and completed about 550 feet so far (past fire hydrant). Density tests are passing.**
3.	**SW end of Dahns**		**Started at Dahn's and Miners intersection. Have completed about 120 feet so far. Width is between 3-4 feet. Compacting with bulldog.**
4.			
5.			

REASON FOR NO WORK:

INFORMATION ON PROGRESS OF WORK – (Causes for delays, extent of delays, Plant, materials, etc.)

MATERIALS DELIVERED TO SITE

	DESCRIPTION
1.	**Dickman delivered gravel.**
2.	
3.	

NOTE

INSPECTIONS AND TEST (Include comment pertaining to contractors activities)

	TESTS	RESULTS		COMMENT
1.	**NCI Density Testing**			
2.				

SAMPLES COLLECTED

	SAMPLE TYPE	SAMPLE ID	COMMENTS
1.			
2.			
3.			

VERBAL INSTRUCTIONS GIVEN TO CONTRACTOR

	NAMES	INSTRUCTION	REACTION	REMARKS
1.				
2.				

3.				
4.				

NOTES –

DESIGN MODIFICATIONS

	DESCRIPTION OF MODIFICATION	REASON	ENGINEER APPROVAL?
1.			
2.			

VISITORS

	TIME	NAME	REPRESENTING	REMARKS
1.				
2.				
3.				
4.				
5.				

NOTES

- **Probably paving on Monday.**

-

REMARKS – (Include controversial matters, information, instructions, disagreements, or any other miscellaneous remarks):

OVERSIGHT SIGNATURE:	DATE	PROJECT MANAGER INITIALS	DATE
Krista Hanson	**6/9/15**		

CONSTRUCTION DAILY ACTIVITY REPORT

TO: Montana Department of Environmental Quality Remediation Division - Mine Waste Cleanup Bureau Helena, MT Attn: Tom Henderson	REPORT NUMBER **#114**
PROJECT: Sand Coulee, water system replacement	DATE **Wednesday, 6-10-2015**
CONTRACTOR: Boland Construction Great Falls, MT	DEQ CONTRACT NUMBER
HAS ANYTHING DEVELOPED ON THE WORK WHICH MIGHT LEAD TO A CHANGE ORDER OR FINDING OF FACT? ☐ NO ☐ YES	WEATHER **Sunny**
HEALTH AND SAFETY Was a Job Safety Meeting held this date? ☐ NO ☐ YES	TEMPERATURE MINIMUM **70** MAXIMUM **80**

NUMBER OF CONTRACTOR'S EMPLOYEES

SUPERVISORY	OPERATORS	LABORERS	TOTAL
Steve C.	**5**	**2**	**7**

24 HOUR PRECIPITATION: **0**

SUBCONTRACTORS ON SITE

COMPANY NAME	TOTAL EMPLOYEES
1. **Steel Etc.**	**2**
2.	

List the major items of equipment

	units	EQUIPMENT DESCRIPTION	Hours	Comments	
1.	**2**	**Mini Excavators**			
2.	**3**	**Frontend loaders**			
3.	**1**	**Skidsteer**			
4.	**1**	**Bulldog**			
5.	**1**	**Roller**			
6.					
7.					

Notes:

CONSTRUCTION DAILY ACTIVITY REPORT

WORK PERFORMED TODAY

	LOCATION	BID ITEM NUMBER	DESCRIPTION OF WORK PERFORMED
1.	**Top of Hill**		**Steel Etc. tore down and removed old tank.**
2.	**NE end of Dahns**		**Completed laying base course for 770 feet on NE end of Dahn's. This portion is ready for paving.**
3.	**SW end of Dahns**		**85% complete laying base course and compacting for 426 feet of 3-4 foot width on SW end of Dahns (from station 30+14 to 32+40). Saw cut existing asphalt around corner from about station 26+40 to 30+14. Excavating this area for base course and asphalt.**
4.			
5.			

REASON FOR NO WORK:

INFORMATION ON PROGRESS OF WORK – (Causes for delays, extent of delays, Plant, materials, etc.)

MATERIALS DELIVERED TO SITE

	DESCRIPTION
1.	**Dickman delivered gravel.**
2.	
3.	

NOTE

INSPECTIONS AND TEST (Include comment pertaining to contractors activities)

	TESTS	RESULTS		COMMENT
1.	**NCI Density Testing**			
2.				

SAMPLES COLLECTED

	SAMPLE TYPE	SAMPLE ID	COMMENTS
1.			
2.			
3.			

VERBAL INSTRUCTIONS GIVEN TO CONTRACTOR

	NAMES	INSTRUCTION	REACTION	REMARKS
1.				

2.				
3.				
4.				

NOTES –

DESIGN MODIFICATIONS

	DESCRIPTION OF MODIFICATION	REASON	ENGINEER APPROVAL?
1.			
2.			

VISITORS

	TIME	NAME	REPRESENTING	REMARKS
1.				
2.				
3.				
4.				
5.				

NOTES

- **Probably paving on Monday.**

-

REMARKS – (Include controversial matters, information, instructions, disagreements, or any other miscellaneous remarks):

OVERSIGHT SIGNATURE:	DATE	PROJECT MANAGER INITIALS	DATE
Krista Hanson	**6/10/15**		

CONSTRUCTION DAILY ACTIVITY REPORT

TO: Montana Department of Environmental Quality Remediation Division - Mine Waste Cleanup Bureau Helena, MT Attn: Tom Henderson	REPORT NUMBER **#115**
PROJECT: Sand Coulee, water system replacement	DATE **Thursday, 6-11-2015**
CONTRACTOR: Boland Construction Great Falls, MT	DEQ CONTRACT NUMBER
HAS ANYTHING DEVELOPED ON THE WORK WHICH MIGHT LEAD TO A CHANGE ORDER OR FINDING OF FACT? ☐ NO ☐ YES	WEATHER **Sunny**
HEALTH AND SAFETY Was a Job Safety Meeting held this date? ☐ NO ☐ YES	TEMPERATURE MINIMUM **70** / MAXIMUM **80**

NUMBER OF CONTRACTOR'S EMPLOYEES				24 HOUR PRECIPITATION
SUPERVISORY	OPERATORS	LABORERS	TOTAL	**0**
Steve C.	**5**	**3**	**8**	

SUBCONTRACTORS ON SITE

COMPANY NAME	TOTAL EMPLOYEES
1. **Steel Etc.**	**2**
2. **PAX mixer representative**	**1**
3. **Redi-Mix representative**	**1**

List the major items of equipment

	units	EQUIPMENT DESCRIPTION	Hours	Comments	
1.	**2**	**Mini Excavators**			
2.	**3**	**Frontend loaders**			
3.	**1**	**Skidsteer**			
4.	**1**	**Bulldog**			
5.	**1**	**Roller**			
6.					
7.					

Notes:

CONSTRUCTION DAILY ACTIVITY REPORT

WORK PERFORMED TODAY

	LOCATION	BID ITEM NUMBER	DESCRIPTION OF WORK PERFORMED
1.	**Top of Hill**		**Steel Etc. cleaned up around old tank site. PAX mixer representative installed mixer.**
2.	**SW end of Dahns**		**Completed laying base course and compacting on SW end of Dahns.**
3.	**Gulch Lane**		**Cleaned and swept Gulch Lane to find existing asphalt edges. String lined and painted 8' wide section for paving.**
4.			
5.			

REASON FOR NO WORK:

INFORMATION ON PROGRESS OF WORK – (Causes for delays, extent of delays, Plant, materials, etc.)

MATERIALS DELIVERED TO SITE

	DESCRIPTION
1.	**Dickman delivered gravel.**
2.	
3.	

NOTE

INSPECTIONS AND TEST (Include comment pertaining to contractors activities)

	TESTS	RESULTS		COMMENT
1.	**NCI Density Testing**			
2.				

SAMPLES COLLECTED

	SAMPLE TYPE	SAMPLE ID	COMMENTS
1.			
2.			
3.			

VERBAL INSTRUCTIONS GIVEN TO CONTRACTOR

	NAMES	INSTRUCTION	REACTION	REMARKS
1.				
2.				

3.				
4.				

NOTES –

DESIGN MODIFICATIONS

	DESCRIPTION OF MODIFICATION	REASON	ENGINEER APPROVAL?
1.			
2.			

VISITORS

	TIME	NAME	REPRESENTING	REMARKS
1.				
2.				
3.				
4.				
5.				

NOTES

- **Meeting with Boland, District, NCI, Hydrometrics – see meeting notes.**
- **PAX mixer representative installed mixer. Talked to Kent and Pat about operation of mixer. Mixer to be left on continually. They recommend replacing motor every 5 years. Need GFCI for mixer. Can check amperage in disconnect box to see if mixer is running. You can also pull it up by the cord and check to see if its running, just don't pull it out of the water.**
- **Steve, Ralph, and Redi-Mix rep looked at Dahn's Lane. Rep said he could pave the 3-4' wide sections. Said he will tack the edges of the existing asphalt. He will come out again Monday and prep everything and pave Tuesday and Wednesday. TDH will collect 5 gallon bucket for Marshall tests and 2 cores, NCI will do density testing.**
- **Ralph and Steve looked at gravel resurfacing. Decided on road behind house 67 (D-8 and D-9) we can overlay existing road with gravel. Moving some gravel on D-9 to road up to houses 531 and 537. Can overlay gravel on Fortune Lane and Miners Lane (Kent's road - millings). Will move some gravel quantities from directional drill (Miners) to Dade Lane.**
- **String lined and painted Gulch Lane (generally 8' width except near bridge where its about 16' width) to prep for excavation, base course, and asphalt.**

REMARKS – (Include controversial matters, information, instructions, disagreements, or any other miscellaneous remarks):

OVERSIGHT SIGNATURE:	DATE	PROJECT MANAGER INITIALS	DATE
Krista Hanson	**6/11/15**		

CONSTRUCTION DAILY ACTIVITY REPORT

TO: Montana Department of Environmental Quality Remediation Division - Mine Waste Cleanup Bureau Helena, MT Attn: Tom Henderson	REPORT NUMBER **#116**
PROJECT: Sand Coulee, water system replacement	DATE **Friday, 6-12-2015**
CONTRACTOR: Boland Construction Great Falls, MT	DEQ CONTRACT NUMBER
HAS ANYTHING DEVELOPED ON THE WORK WHICH MIGHT LEAD TO A CHANGE ORDER OR FINDING OF FACT? ☐ NO ☐ YES	WEATHER **Sunny**
HEALTH AND SAFETY Was a Job Safety Meeting held this date? ☐ NO ☐ YES	TEMPERATURE MINIMUM **70** MAXIMUM **80**

NUMBER OF CONTRACTOR'S EMPLOYEES

SUPERVISORY	OPERATORS	LABORERS	TOTAL
Steve C.	**5**	**7**	**12**

24 HOUR PRECIPITATION: **0**

SUBCONTRACTORS ON SITE

COMPANY NAME	TOTAL EMPLOYEES
1. **Double G Engraving and Awards**	**2**
2.	

List the major items of equipment

	units	EQUIPMENT DESCRIPTION	Hours	Comments	
1.	**2**	**Mini Excavators**			
2.	**3**	**Frontend loaders**			
3.	**1**	**Skidsteer**			
4.	**1**	**Bulldog**			
5.	**1**	**Roller**			
6.					
7.					

Notes:

CONSTRUCTION DAILY ACTIVITY REPORT

WORK PERFORMED TODAY

	LOCATION	BID ITEM NUMBER	DESCRIPTION OF WORK PERFORMED
1.	**Top of Hill**		**Grading around water tank. Drilled holes for sign on well house. Will put up after building is coated.**
2.	**SW end of Dahns**		**Graded and compacted base course on SW end of Dahns. Now finished on Dahns.**
3.	**Gulch Lane**		**Started excavating 13" depth on Gulch Lane. Started at bridge.**
4.			
5.			

REASON FOR NO WORK:

INFORMATION ON PROGRESS OF WORK – (Causes for delays, extent of delays, Plant, materials, etc.)

MATERIALS DELIVERED TO SITE

	DESCRIPTION
1.	**Dickman delivered gravel.**
2.	
3.	

NOTE

INSPECTIONS AND TEST (Include comment pertaining to contractors activities)

	TESTS	RESULTS		COMMENT
1.	**NCI Density Testing**			
2.				

SAMPLES COLLECTED

	SAMPLE TYPE	SAMPLE ID	COMMENTS
1.			
2.			
3.			

VERBAL INSTRUCTIONS GIVEN TO CONTRACTOR

	NAMES	INSTRUCTION	REACTION	REMARKS
1.				
2.				

3.				
4.				

NOTES –

DESIGN MODIFICATIONS

	DESCRIPTION OF MODIFICATION	REASON	ENGINEER APPROVAL?
1.			
2.			

VISITORS

	TIME	NAME	REPRESENTING	REMARKS
1.				
2.				
3.				
4.				
5.				

NOTES

- **House 67 (sheets D-8 and D-9) – Ramanchecks don't want gravel on their road. 380′.**

REMARKS – (Include controversial matters, information, instructions, disagreements, or any other miscellaneous remarks):

OVERSIGHT SIGNATURE:	DATE	PROJECT MANAGER INITIALS	DATE
Krista Hanson	**6/12/15**		

CONSTRUCTION DAILY ACTIVITY REPORT

TO: Montana Department of Environmental Quality Remediation Division - Mine Waste Cleanup Bureau Helena, MT Attn: Tom Henderson	REPORT NUMBER **#117**
PROJECT: Sand Coulee, water system replacement	DATE **Monday, 6-15-2015**
CONTRACTOR: Boland Construction Great Falls, MT	DEQ CONTRACT NUMBER
HAS ANYTHING DEVELOPED ON THE WORK WHICH MIGHT LEAD TO A CHANGE ORDER OR FINDING OF FACT? ☐ NO ☐ YES	WEATHER **Sunny**
HEALTH AND SAFETY Was a Job Safety Meeting held this date? ☐ NO ☐ YES	TEMPERATURE MINIMUM **70** MAXIMUM **80**

NUMBER OF CONTRACTOR'S EMPLOYEES

SUPERVISORY	OPERATORS	LABORERS	TOTAL
Steve C.	**5**	**7**	**12**

24 HOUR PRECIPITATION: **0**

SUBCONTRACTORS ON SITE

COMPANY NAME	TOTAL EMPLOYEES
1. **Great Falls Sand and Gravel**	**3**
2.	

List the major items of equipment

	units	EQUIPMENT DESCRIPTION	Hours	Comments	
1.	**2**	**Mini Excavators**			
2.	**3**	**Frontend loaders**			
3.	**1**	**Skidsteer**			
4.	**1**	**Bulldog**			
5.	**1**	**Roller**			
6.					
7.					

Notes:

CONSTRUCTION DAILY ACTIVITY REPORT

WORK PERFORMED TODAY

	LOCATION	BID ITEM NUMBER	DESCRIPTION OF WORK PERFORMED
1.	**Top of Hill**		**Grading/ landscaping around water tank. Cleaned and coated well house. Put culvert in under road (near water tank gates). Put rock collar and rip rap around pressure relief and sump pump discharge lines.**
2.	**Dahns**		**Great Falls Sand and Gravel prepped Dahns Lane for paving. Fine graded, watered and rolled. Some was not quite 3" depth so they are regrading this. Also dug out, watered, rolled, street crossings by post office and church. Maybe paving around noon today if they finish with regrading and 3" depth of asphalt is provided.**
3.	**Gulch Lane**		**Continued excavating 13" on Gulch Lane and laying and compacting base course. Almost finished with this.**
4.			
5.			

REASON FOR NO WORK:

INFORMATION ON PROGRESS OF WORK – (Causes for delays, extent of delays, Plant, materials, etc.)

MATERIALS DELIVERED TO SITE

	DESCRIPTION
1.	**Dickman delivered gravel.**
2.	
3.	

NOTE

INSPECTIONS AND TEST (Include comment pertaining to contractors activities)

	TESTS	RESULTS		COMMENT
1.	**NCI Density Testing**			
2.				

SAMPLES COLLECTED

	SAMPLE TYPE	SAMPLE ID	COMMENTS
1.			
2.			
3.			

VERBAL INSTRUCTIONS GIVEN TO CONTRACTOR

	NAMES	INSTRUCTION	REACTION	REMARKS

1.				
2.				
3.				
4.				

NOTES –

DESIGN MODIFICATIONS

	DESCRIPTION OF MODIFICATION	REASON	ENGINEER APPROVAL?
1.			
2.			

VISITORS

	TIME	NAME	REPRESENTING	REMARKS
1.				
2.				
3.				
4.				
5.				

NOTES

- **Water tank may be leaking. Still pumping water out of sump drain in inflow meter manhole. Floor may be leaking or there may be a bad seal between floor and pipe penetration. The thought right now is to get a temporary 3000-5000 gallon tank and pipe it to the stub out for well #6, close the valve to the water tank so water from well #5 fills temporary tank, hook transducer up to temporary tank to control pump, and drain tank to find out where the leak is.**
- **Will pave either today around 12:00 or start tomorrow morning. Great Falls Sand and Gravel/Redimix was fine grading, watering, and rolling Dahns Lane today – had a little less than 3" for asphalt in some places so they will regrade tomorrow before paving. Will tack edges of existing asphalt right before paving.**
- **On Friday installed 39 water meters. Plumber will be out Tuesday to install more meters and check those that were installed.**
-

REMARKS – (Include controversial matters, information, instructions, disagreements, or any other miscellaneous remarks):

OVERSIGHT SIGNATURE:	DATE	PROJECT MANAGER INITIALS	DATE
Krista Hanson	**6/15/15**		

CONSTRUCTION DAILY ACTIVITY REPORT

TO: Montana Department of Environmental Quality Remediation Division - Mine Waste Cleanup Bureau Helena, MT Attn: Tom Henderson	REPORT NUMBER **#118**
PROJECT: Sand Coulee, water system replacement	DATE **Tuesday, 6-16-2015**
CONTRACTOR: Boland Construction Great Falls, MT	DEQ CONTRACT NUMBER
HAS ANYTHING DEVELOPED ON THE WORK WHICH MIGHT LEAD TO A CHANGE ORDER OR FINDING OF FACT? ☐ NO ☐ YES	WEATHER **Sunny**
HEALTH AND SAFETY Was a Job Safety Meeting held this date? ☐ NO ☐ YES	TEMPERATURE MINIMUM **70** MAXIMUM **80**

NUMBER OF CONTRACTOR'S EMPLOYEES

SUPERVISORY	OPERATORS	LABORERS	TOTAL
Steve C.	**5**	**7**	**12**

24 HOUR PRECIPITATION: **0**

SUBCONTRACTORS ON SITE

COMPANY NAME	TOTAL EMPLOYEES
1. **Great Falls Sand and Gravel**	**4**
2.	

List the major items of equipment

	units	EQUIPMENT DESCRIPTION	Hours	Comments	
1.	**2**	**Mini Excavators**			
2.	**3**	**Frontend loaders**			
3.	**1**	**Skidsteer**			
4.	**1**	**Bulldog**			
5.	**1**	**Roller**			
6.					
7.					

Notes:

CONSTRUCTION DAILY ACTIVITY REPORT

WORK PERFORMED TODAY

	LOCATION	BID ITEM NUMBER	DESCRIPTION OF WORK PERFORMED
1.	**Top of Hill**		**Continued grading/ landscaping around water tank and well house. Graded to provide drainage around well house and around hoot side of building. Laid top soil, seeded, picked rocks. Grates are in for both manholes and overflow.**
2.	**Dahns/Gulch**		**Great Falls Sand and Gravel prepped Dahns and Gulch for paving. Made sure we had 3" depth and cleaned edges. Paving tomorrow.**
3.	**Gulch**		**Excavated and laid base course around hydrant runs on SW end of Gulch to patch with asphalt.**
4.			
5.			

REASON FOR NO WORK:

INFORMATION ON PROGRESS OF WORK – (Causes for delays, extent of delays, Plant, materials, etc.)

MATERIALS DELIVERED TO SITE

	DESCRIPTION
1.	**Dickman delivered gravel.**
2.	
3.	

NOTE

INSPECTIONS AND TEST (Include comment pertaining to contractors activities)

	TESTS	RESULTS		COMMENT
1.	**NCI Density Testing**			
2.				

SAMPLES COLLECTED

	SAMPLE TYPE	SAMPLE ID	COMMENTS
1.			
2.			
3.			

VERBAL INSTRUCTIONS GIVEN TO CONTRACTOR

	NAMES	INSTRUCTION	REACTION	REMARKS
1.				
2.				

3.				
4.				

NOTES –

DESIGN MODIFICATIONS

	DESCRIPTION OF MODIFICATION	REASON	ENGINEER APPROVAL?
1.			
2.			

VISITORS

	TIME	NAME	REPRESENTING	REMARKS
1.				
2.				
3.				
4.				
5.				

NOTES

-

REMARKS – (Include controversial matters, information, instructions, disagreements, or any other miscellaneous remarks):

OVERSIGHT SIGNATURE:	DATE	PROJECT MANAGER INITIALS	DATE
Krista Hanson	**6/16/15**		

CONSTRUCTION DAILY ACTIVITY REPORT

TO: Montana Department of Environmental Quality Remediation Division - Mine Waste Cleanup Bureau Helena, MT Attn: Tom Henderson	REPORT NUMBER **#119**
PROJECT: Sand Coulee, water system replacement	DATE **Wednesday, 6-17-2015**
CONTRACTOR: Boland Construction Great Falls, MT	DEQ CONTRACT NUMBER
HAS ANYTHING DEVELOPED ON THE WORK WHICH MIGHT LEAD TO A CHANGE ORDER OR FINDING OF FACT? ☐ NO ☐ YES	WEATHER **Sunny**
HEALTH AND SAFETY Was a Job Safety Meeting held this date? ☐ NO ☐ YES	TEMPERATURE MINIMUM **70** MAXIMUM **80**

NUMBER OF CONTRACTOR'S EMPLOYEES

SUPERVISORY	OPERATORS	LABORERS	TOTAL
Steve C.	**5**	**7**	**12**

24 HOUR PRECIPITATION: **0**

SUBCONTRACTORS ON SITE

COMPANY NAME	TOTAL EMPLOYEES
1. **Great Falls Sand and Gravel**	**8**
2.	

List the major items of equipment

	units	EQUIPMENT DESCRIPTION	Hours	Comments	
1.	**2**	**Mini Excavators**			
2.	**3**	**Frontend loaders**			
3.	**1**	**Skidsteer**			
4.	**1**	**Bulldog**			
5.	**1**	**Roller**			
6.					
7.					

Notes:

CONSTRUCTION DAILY ACTIVITY REPORT

WORK PERFORMED TODAY

	LOCATION	BID ITEM NUMBER	DESCRIPTION OF WORK PERFORMED
1.	**Dahns/Gulch**		**Paved Dahn's Lane and Gulch Lane and road crossings. Completed paving.**
2.	**Gulch**		**Laid gravel on road from bridge up to Forbes and on road up to House 531 and 537. Road from bridge to behind house 67, didn't excavate 6" because subgrade was hard and compacted. Laid 3" of gravel at property owners request.**
3.	**Tank Hill**		**Installed dehumidifier shelf and grouted around top of sump drain between gravel and plastic.**
4.			
5.			

REASON FOR NO WORK:

INFORMATION ON PROGRESS OF WORK – (Causes for delays, extent of delays, Plant, materials, etc.)

MATERIALS DELIVERED TO SITE

	DESCRIPTION
1.	**Dickman delivered gravel.**
2.	
3.	

NOTE

INSPECTIONS AND TEST (Include comment pertaining to contractors activities)

	TESTS	RESULTS		COMMENT
1.	**NCI Density Testing**			
2.				

SAMPLES COLLECTED

	SAMPLE TYPE	SAMPLE ID	COMMENTS
1.			
2.			
3.			

VERBAL INSTRUCTIONS GIVEN TO CONTRACTOR

	NAMES	INSTRUCTION	REACTION	REMARKS
1.				

2.				
3.				
4.				

NOTES –

DESIGN MODIFICATIONS

	DESCRIPTION OF MODIFICATION	REASON	ENGINEER APPROVAL?
1.			
2.			

VISITORS

	TIME	NAME	REPRESENTING	REMARKS
1.				
2.				
3.				
4.				
5.				

NOTES

- **Paved Dahn's Lane, Gulch Lane, and road crossings. Tacked edges of existing asphalt before paving. TD&H density tested and collected 5 gallon bucket for Marshall testing. Density requirement was 92% of theoretical maximum giving density requirement of 137.5 pcf. I talked to TD&H and density tests were passing. Need core samples.**
- **Meeting with DEQ, Hydrometrics, Boland, NCI, and district.**

Quick memo from today's meeting….

Barry (and Steve) to get us a plan of attack on both #35 service work and with water tank. Also need a cost to replace Mary Ann's ¾" water service (and meter) with 1" size materials. Barry promised narratives on #35 and Tank by Friday 19th.

Barry, you and I can visit on contract days, but I gave weather day for May 26th, May 28th was a full day in that the painter and well installation took place and Krista on job all day. I also gave the 3 days for WD #3 with pump and VFD installation. My last day remains at June 18th.

House #35, Boland check and see if #35 is tied to neighbor's water service, then possibly run an indicator inside #35 water service to see direction, need to visit with George 231 8943. And lastly remove rock wall and explore more at 6" main. My opinion this is change of condition, especially with rock wall effort. Probably complete on time and material basis, need hourly figures on labor/operator and equipment from Boland. Estimate time to start and complete. This will take some NCI involvement to track Boland efforts.

Tank leak review, Barry needs to coordinate with Engineering America (tank people) on solution. This is warranty work. This effort needs to be completed in short duration because Town needs water. This will take some NCI involvement. Also tank should be on line to do the control system check out.

REMARKS – (Include controversial matters, information, instructions, disagreements, or any other miscellaneous remarks):

OVERSIGHT SIGNATURE:	DATE	PROJECT MANAGER INITIALS	DATE
Krista Hanson	**6/17/15**		

CONSTRUCTION DAILY ACTIVITY REPORT

TO: Montana Department of Environmental Quality Remediation Division - Mine Waste Cleanup Bureau Helena, MT Attn: Tom Henderson	REPORT NUMBER **#120**
PROJECT: Sand Coulee, water system replacement	DATE **Thursday, 6-18-2015**
CONTRACTOR: Boland Construction Great Falls, MT	DEQ CONTRACT NUMBER
HAS ANYTHING DEVELOPED ON THE WORK WHICH MIGHT LEAD TO A CHANGE ORDER OR FINDING OF FACT? ☐ NO ☐ YES	WEATHER **Sunny**
HEALTH AND SAFETY Was a Job Safety Meeting held this date? ☐ NO ☐ YES	TEMPERATURE MINIMUM **70** MAXIMUM **80**

NUMBER OF CONTRACTOR'S EMPLOYEES

SUPERVISORY	OPERATORS	LABORERS	TOTAL
Steve C.	**5**	**7**	**12**

24 HOUR PRECIPITATION: **0**

SUBCONTRACTORS ON SITE

COMPANY NAME	TOTAL EMPLOYEES
1. **Double G Engraving**	**1**
2.	

List the major items of equipment

	units	EQUIPMENT DESCRIPTION	Hours	Comments	
1.	**2**	**Mini Excavators**			
2.	**3**	**Frontend loaders**			
3.	**1**	**Skidsteer**			
4.	**1**	**Bulldog**			
5.	**1**	**Roller**			
6.					
7.					

Notes:

CONSTRUCTION DAILY ACTIVITY REPORT

WORK PERFORMED TODAY

	LOCATION	BID ITEM NUMBER	DESCRIPTION OF WORK PERFORMED
1.	**Gravel Resurfacing**		**Completed gravel resurfacing on Fortune, part of Miners (except Kent's road), Dade Lane, Rosie's Lane, and road around church. (95% complete)**
2.	**Meters**		**Installed all but 12 meters – meters have been ordered.**
3.	**Tank Hill**		**Filled low spot on tank hill road from about station 3+00 to 4+00. Completed plumbing from sump pump to pipe penetration through wall.**
4.			
5.			

REASON FOR NO WORK:

INFORMATION ON PROGRESS OF WORK – (Causes for delays, extent of delays, Plant, materials, etc.)

MATERIALS DELIVERED TO SITE

	DESCRIPTION
1.	**Dickman delivered gravel.**
2.	
3.	

NOTE

INSPECTIONS AND TEST (Include comment pertaining to contractors activities)

	TESTS	RESULTS		COMMENT
1.	**NCI Density Testing**			
2.				

SAMPLES COLLECTED

	SAMPLE TYPE	SAMPLE ID	COMMENTS
1.			
2.			
3.			

VERBAL INSTRUCTIONS GIVEN TO CONTRACTOR

	NAMES	INSTRUCTION	REACTION	REMARKS
1.				

2.				
3.				
4.				

NOTES –

DESIGN MODIFICATIONS

	DESCRIPTION OF MODIFICATION	REASON	ENGINEER APPROVAL?
1.			
2.			

VISITORS

	TIME	NAME	REPRESENTING	REMARKS
1.				
2.				
3.				
4.				
5.				

NOTES

- **Millings from Sierra (and City) should be here Friday to finish tank road and Miners**
- **385 ton of asphalt was poured**
- **Used about 37 cubic yards (loose) to fill low spot on tank hill road from about station 3+00 to 4+00.**
- **12 meters remain to be installed. The meters have been ordered – not on-site. Plumber was here. He checked installed meters and is providing signed statement according to spec.**
- **Installed lettering on well house building.**
- **Will grout manhole floors Friday.**
-
-

REMARKS – (Include controversial matters, information, instructions, disagreements, or any other miscellaneous remarks):

OVERSIGHT SIGNATURE:	DATE	PROJECT MANAGER INITIALS	DATE
Krista Hanson	**6/18/15**		

CONSTRUCTION DAILY ACTIVITY REPORT

TO: Montana Department of Environmental Quality Remediation Division - Mine Waste Cleanup Bureau Helena, MT Attn: Tom Henderson	REPORT NUMBER **#121**
PROJECT: Sand Coulee, water system replacement	DATE **Friday, 6-19-2015**
CONTRACTOR: Boland Construction Great Falls, MT	DEQ CONTRACT NUMBER
HAS ANYTHING DEVELOPED ON THE WORK WHICH MIGHT LEAD TO A CHANGE ORDER OR FINDING OF FACT? ☐ NO ☐ YES	WEATHER **Sunny**
HEALTH AND SAFETY Was a Job Safety Meeting held this date? ☐ NO ☐ YES	TEMPERATURE MINIMUM **70** MAXIMUM **80**

NUMBER OF CONTRACTOR'S EMPLOYEES

SUPERVISORY	OPERATORS	LABORERS	TOTAL
Steve C.	**5**	**7**	**12**

24 HOUR PRECIPITATION: **0**

SUBCONTRACTORS ON SITE

COMPANY NAME	TOTAL EMPLOYEES
1.	

List the major items of equipment

	units	EQUIPMENT DESCRIPTION	Hours	Comments	
1.	**2**	**Mini Excavators**			
2.	**3**	**Frontend loaders**			
3.	**1**	**Skidsteer**			
4.	**1**	**Bulldog**			
5.	**1**	**Roller**			
6.					
7.					

Notes:

CONSTRUCTION DAILY ACTIVITY REPORT

WORK PERFORMED TODAY

	LOCATION	BID ITEM NUMBER	DESCRIPTION OF WORK PERFORMED
1.	**Gravel Resurfacing**		**Put gravel on road near tank hill in front of house 56 and by house 70 on Rosie's Lane.**
2.	**Manholes**		**Grouted the floors of both manholes to provide slope to drain. Pumped out tank level manhole.**
3.	**Tank Hill**		**Laid 4" depth of millings (12' wide) on tank hill road from about station 19+00 to 26+60 (fence)**
4.			
5.			

REASON FOR NO WORK:

INFORMATION ON PROGRESS OF WORK – (Causes for delays, extent of delays, Plant, materials, etc.)

MATERIALS DELIVERED TO SITE

	DESCRIPTION
1.	**Dickman delivered gravel.**
2.	
3.	

NOTE

INSPECTIONS AND TEST (Include comment pertaining to contractors activities)

	TESTS	RESULTS		COMMENT
1.	**NCI Density Testing**			
2.				

SAMPLES COLLECTED

	SAMPLE TYPE	SAMPLE ID	COMMENTS
1.			
2.			
3.			

VERBAL INSTRUCTIONS GIVEN TO CONTRACTOR

	NAMES	INSTRUCTION	REACTION	REMARKS
1.				
2.				

3.				
4.				

NOTES –

DESIGN MODIFICATIONS

	DESCRIPTION OF MODIFICATION	REASON	ENGINEER APPROVAL?
1.			
2.			

VISITORS

	TIME	NAME	REPRESENTING	REMARKS
1.				
2.				
3.				
4.				
5.				

NOTES

- **Millings from Sierra should be here Monday to finish tank hill road with.**
-
-

REMARKS – (Include controversial matters, information, instructions, disagreements, or any other miscellaneous remarks):

OVERSIGHT SIGNATURE:	DATE	PROJECT MANAGER INITIALS	DATE
Krista Hanson	**6/19/15**		

CONSTRUCTION DAILY ACTIVITY REPORT

TO: Montana Department of Environmental Quality Remediation Division - Mine Waste Cleanup Bureau Helena, MT Attn: Tom Henderson	REPORT NUMBER **#122**
PROJECT: Sand Coulee, water system replacement	DATE **Monday, 6-22-2015**
CONTRACTOR: Boland Construction Great Falls, MT	DEQ CONTRACT NUMBER
HAS ANYTHING DEVELOPED ON THE WORK WHICH MIGHT LEAD TO A CHANGE ORDER OR FINDING OF FACT? ☐ NO ☐ YES	WEATHER **Sunny**
HEALTH AND SAFETY Was a Job Safety Meeting held this date? ☐ NO ☐ YES	TEMPERATURE MINIMUM **70** MAXIMUM **80**

NUMBER OF CONTRACTOR'S EMPLOYEES				24 HOUR PRECIPITATION
SUPERVISORY	OPERATORS	LABORERS	TOTAL	**0**
Steve C.	**5**	**7**	**12**	

SUBCONTRACTORS ON SITE

COMPANY NAME	TOTAL EMPLOYEES
1.	

List the major items of equipment

	units	EQUIPMENT DESCRIPTION	Hours	Comments	
1.	**2**	**Mini Excavators**			
2.	**3**	**Frontend loaders**			
3.	**1**	**Skidsteer**			
4.	**1**	**Bulldog**			
5.	**1**	**Roller**			
6.					
7.					

Notes:

CONSTRUCTION DAILY ACTIVITY REPORT

WORK PERFORMED TODAY			
	LOCATION	BID ITEM NUMBER	DESCRIPTION OF WORK PERFORMED
1.	**Miners Lane**		**Finished placing millings on top of tank hill road. Put 3" (16' wide) millings on Miners from Miners and Dahn's intersection to alley. Not completed yet, will finish Tuesday. Still need to do service lines and fine tune – i.e. blend gravel on Fortune over to millings on Miners.**
2.	**PRV Manhole**		**Finished grouting floor of PRV manhole.**
3.	**Misc.**		**Installed 2 removable bollards around well #5. Will paint and weld on handles Tuesday. Excavated around old main at bottom of tank hill to abandon with concrete plug. Will pour concrete plug Tuesday.**
4.			
5.			

REASON FOR NO WORK:

INFORMATION ON PROGRESS OF WORK – (Causes for delays, extent of delays, Plant, materials, etc.)

MATERIALS DELIVERED TO SITE	
	DESCRIPTION
1.	
2.	
3.	

NOTE

INSPECTIONS AND TEST (Include comment pertaining to contractors activities)

	TESTS	RESULTS		COMMENT
1.				
2.				

SAMPLES COLLECTED

	SAMPLE TYPE	SAMPLE ID	COMMENTS
1.			
2.			
3.			

VERBAL INSTRUCTIONS GIVEN TO CONTRACTOR				
	NAMES	INSTRUCTION	REACTION	REMARKS
1.				

2.				
3.				
4.				

NOTES –

DESIGN MODIFICATIONS

	DESCRIPTION OF MODIFICATION	REASON	ENGINEER APPROVAL?
1.			
2.			

VISITORS

	TIME	NAME	REPRESENTING	REMARKS
1.				
2.				
3.				
4.				
5.				

NOTES

Construction Items left on punch list:

- Asphalt millings on tank hill road,
- Paint outside electrical boxes and conduits
- Fix double doors on well house (no seal on bottom, the one door seems to be warped)
- Strip heater (United has ordered)
- Abandon White Well House (save red house till 6 is operational)
- Water Service at 35 Gulch (change of condition)
- Finish installing Meters – 12 remaining (have been ordered)
- Tank Leak (will need a plan for correction submitted)
- Mary Ann's Line (DEQ considering)
- Coat mechanical air release valves *include the brass, needs to be a "potable water" coating
- Start up for pressure relief valve by Service Tech. Set valve at 2 to 3 feet higher than tank overflow

REMARKS – (Include controversial matters, information, instructions, disagreements, or any other miscellaneous remarks):

OVERSIGHT SIGNATURE:	DATE	PROJECT MANAGER INITIALS	DATE
Krista Hanson	**6/22/15**		

CONSTRUCTION DAILY ACTIVITY REPORT

TO: Montana Department of Environmental Quality Remediation Division - Mine Waste Cleanup Bureau Helena, MT Attn: Tom Henderson	REPORT NUMBER **#123**
PROJECT: Sand Coulee, water system replacement	DATE **Tuesday, 6-23-2015**
CONTRACTOR: Boland Construction Great Falls, MT	DEQ CONTRACT NUMBER
HAS ANYTHING DEVELOPED ON THE WORK WHICH MIGHT LEAD TO A CHANGE ORDER OR FINDING OF FACT? ☐ NO ☐ YES	WEATHER **Sunny**
HEALTH AND SAFETY Was a Job Safety Meeting held this date? ☐ NO ☐ YES	TEMPERATURE MINIMUM **70** MAXIMUM **85**

NUMBER OF CONTRACTOR'S EMPLOYEES

SUPERVISORY	OPERATORS	LABORERS	TOTAL
Steve C.	**4**	**3**	**7**

24 HOUR PRECIPITATION: **0**

SUBCONTRACTORS ON SITE

COMPANY NAME	TOTAL EMPLOYEES
1.	

List the major items of equipment

	units	EQUIPMENT DESCRIPTION	Hours	Comments	
1.	**1**	**Mini Excavator**			
2.	**2**	**Frontend loaders**			
3.	**2**	**Skidsteers**			
4.	**1**	**Bulldog**			
5.	**1**	**Vibratory Roller**			
6.					
7.					

Notes:

CONSTRUCTION DAILY ACTIVITY REPORT

WORK PERFORMED TODAY

	LOCATION	BID ITEM NUMBER	DESCRIPTION OF WORK PERFORMED
1.	**Miners Lane**		**Finished placing millings over main and service lines on Miners.**
2.	**Streets**		**Dressing up streets between asphalt and soil interface.**
3.	**Misc.**		**Finished installing removable bollards.** **To abandon old main: removed coupler and capped new line. Placed cinder blocks between capped new line and old line. Poured concrete block around everything.**
4.	**Tank Hill Road**		**Laid 4" (12' wide) Sierra blend (millings and concrete) from middle of tank hill to top of hill.**
5.	**House 35**		**Put tracer line down water service line at House 35. Looks like it comes out about a foot NE of where we stopped excavating with soft dig. Will soft dig at traced location Wednesday.**

REASON FOR NO WORK:

INFORMATION ON PROGRESS OF WORK – (Causes for delays, extent of delays, Plant, materials, etc.)

MATERIALS DELIVERED TO SITE

	DESCRIPTION
1.	
2.	
3.	

NOTE

INSPECTIONS AND TEST (Include comment pertaining to contractors activities)

	TESTS	RESULTS		COMMENT
1.				
2.				

SAMPLES COLLECTED

	SAMPLE TYPE	SAMPLE ID	COMMENTS
1.			
2.			
3.			

CONSTRUCTION DAILY ACTIVITY REPORT

VERBAL INSTRUCTIONS GIVEN TO CONTRACTOR

	NAMES	INSTRUCTION	REACTION	REMARKS
1.				
2.				
3.				
4.				

NOTES –

DESIGN MODIFICATIONS

	DESCRIPTION OF MODIFICATION	REASON	ENGINEER APPROVAL?
1.			
2.			

VISITORS

	TIME	NAME	REPRESENTING	REMARKS
1.				
2.				
3.				
4.				
5.				

NOTES

Construction Items left on punch list:

- Asphalt millings on tank hill road, (1/2 done)
- Paint outside electrical boxes and conduits
- Fix double doors on well house (no seal on bottom, the one door seems to be warped)
- Strip heater (United has ordered)
- Abandon White Well House (save red house till 6 is operational)
- Water Service at 35 Gulch (change of condition) (put tracer wire down line – will soft dig Wednesday)
- Finish installing Meters – 12 remaining (have been ordered)
- Tank Leak (will need a plan for correction submitted)
- Mary Ann's Line (DEQ considering)
- Coat mechanical air release valves *include the brass, needs to be a "potable water" coating (the one by fire hall is done.)
- Start up for pressure relief valve by Service Tech. Set valve at 2 to 3 feet higher than tank overflow

REMARKS – (Include controversial matters, information, instructions, disagreements, or any other miscellaneous remarks):

OVERSIGHT SIGNATURE:	DATE	PROJECT MANAGER INITIALS	DATE
Krista Hanson	**6/23/15**		

CONSTRUCTION DAILY ACTIVITY REPORT

TO: Montana Department of Environmental Quality Remediation Division - Mine Waste Cleanup Bureau Helena, MT Attn: Tom Henderson	REPORT NUMBER **#124**
PROJECT: Sand Coulee, water system replacement	DATE **Wednesday, 6-24-2015**
CONTRACTOR: Boland Construction Great Falls, MT	DEQ CONTRACT NUMBER
HAS ANYTHING DEVELOPED ON THE WORK WHICH MIGHT LEAD TO A CHANGE ORDER OR FINDING OF FACT? ☐ NO ☐ YES	WEATHER **Sunny**
HEALTH AND SAFETY Was a Job Safety Meeting held this date? ☐ NO ☐ YES	TEMPERATURE MINIMUM **70** MAXIMUM **85**

NUMBER OF CONTRACTOR'S EMPLOYEES				24 HOUR PRECIPITATION
SUPERVISORY	OPERATORS	LABORERS	TOTAL	**0**
Steve C.	**4**	**3**	**7**	

SUBCONTRACTORS ON SITE

COMPANY NAME	TOTAL EMPLOYEES
1.	

List the major items of equipment

	units	EQUIPMENT DESCRIPTION	Hours	Comments	
1.	**1**	**Mini Excavator**			
2.	**2**	**Frontend loaders**			
3.	**2**	**Skidsteers**			
4.	**1**	**Bulldog**			
5.	**1**	**Vibratory Roller**			
6.					
7.					

Notes:

CONSTRUCTION DAILY ACTIVITY REPORT

WORK PERFORMED TODAY

	LOCATION	BID ITEM NUMBER	DESCRIPTION OF WORK PERFORMED
1.	**Tank Hill Road**		**Laid 4" (12' wide) Sierra blend from middle of tank hill to bottom of hill. (Station 8+00 to 4+00). Didn't get all the way to the top with Sierra millings. Need more material - will complete top portion of the hill Thursday.**
2.	**House 35**		**Used soft dig to excavate for service line. Found service line near house about 6.5' deep, a few feet north (near SE corner of house) of where we had stopped excavating before. Started excavating for line at 2:30 p.m. Found line at 5:30. Cleaned up.**
3.	**Misc.**		**Checked all valves to make sure they are open. Installed strip heater. Coated air release valve by Rosie's Lane. Both air release valves now coated.**
4.			
5.			

REASON FOR NO WORK:

INFORMATION ON PROGRESS OF WORK – (Causes for delays, extent of delays, Plant, materials, etc.)

MATERIALS DELIVERED TO SITE

	DESCRIPTION
1.	
2.	
3.	

NOTE

INSPECTIONS AND TEST (Include comment pertaining to contractors activities)

	TESTS	RESULTS		COMMENT
1.				
2.				

SAMPLES COLLECTED

	SAMPLE TYPE	SAMPLE ID	COMMENTS
1.			
2.			
3.			

CONSTRUCTION DAILY ACTIVITY REPORT

VERBAL INSTRUCTIONS GIVEN TO CONTRACTOR

	NAMES	INSTRUCTION	REACTION	REMARKS
1.				
2.				
3.				
4.				

NOTES –

DESIGN MODIFICATIONS

	DESCRIPTION OF MODIFICATION	REASON	ENGINEER APPROVAL?
1.			
2.			

VISITORS

	TIME	NAME	REPRESENTING	REMARKS
1.				
2.				
3.				
4.				
5.				

NOTES

Construction Items left on punch list:

- Asphalt millings on tank hill road, (95% completed)
- Paint outside electrical boxes and conduits
- Fix double doors on well house (no seal on bottom, the one door seems to be warped)
- ~~Strip heater (United has ordered)~~
- Abandon White Well House (save red house till 6 is operational)
- Water Service at 35 Gulch (change of condition) (used soft dig to look for service line – Found service line)
- Finish installing Meters – 12 remaining (have been ordered)
- Tank Leak (will need a plan for correction submitted)
- Mary Ann's Line (DEQ considering)
- ~~Coat mechanical air release valves *include the brass, needs to be a "potable water" coating~~
- Start up for pressure relief valve by Service Tech. Set valve at 2 to 3 feet higher than tank overflow

House 35 Gulch:

Option 1: Shut off neighbors water and House 35 still had water so not connected to neighbors – 0 hours

Option 2: Turned off water to Gulch Lane, drained line, took apart plumbing and put fish tape down service line from inside house to trace line and re-plumbed pipe. **Monday 8-11, 12-1, 4 hours, 1 person**

Used soft dig to locate line – Found service line near house about 6.5 ' deep.

Tuesday 2:30 – 6 p.m. 3.5 hours. 2 people

REMARKS – (Include controversial matters, information, instructions, disagreements, or any other miscellaneous remarks):

OVERSIGHT SIGNATURE:	DATE	PROJECT MANAGER INITIALS	DATE
Krista Hanson	**6/24/15**		

CONSTRUCTION DAILY ACTIVITY REPORT

TO: Montana Department of Environmental Quality Remediation Division - Mine Waste Cleanup Bureau Helena, MT Attn: Tom Henderson	REPORT NUMBER **#125**
PROJECT: Sand Coulee, water system replacement	DATE **Thursday, 6-25-2015**
CONTRACTOR: Boland Construction Great Falls, MT	DEQ CONTRACT NUMBER
HAS ANYTHING DEVELOPED ON THE WORK WHICH MIGHT LEAD TO A CHANGE ORDER OR FINDING OF FACT? ☐ NO ☐ YES	WEATHER **Sunny**
HEALTH AND SAFETY Was a Job Safety Meeting held this date? ☐ NO ☐ YES	TEMPERATURE MINIMUM **70** MAXIMUM **85**

NUMBER OF CONTRACTOR'S EMPLOYEES

SUPERVISORY	OPERATORS	LABORERS	TOTAL
Steve C.	**4**	**3**	**7**

24 HOUR PRECIPITATION: **0**

SUBCONTRACTORS ON SITE

COMPANY NAME	TOTAL EMPLOYEES
1.	

List the major items of equipment

	units	EQUIPMENT DESCRIPTION	Hours	Comments	
1.	**1**	**Mini Excavator**			
2.	**2**	**Frontend loaders**			
3.	**2**	**Skidsteers**			
4.	**1**	**Bulldog**			
5.	**1**	**Vibratory Roller**			
6.					
7.					

Notes:

CONSTRUCTION DAILY ACTIVITY REPORT

WORK PERFORMED TODAY

	LOCATION	BID ITEM NUMBER	DESCRIPTION OF WORK PERFORMED
1.	**Tank Hill Road**		**Completed surfacing on tank hill road.**
2.	**Misc.**		**Painted floors of manholes. Excavated around 3" valve at well 6 to hook into temporary tank.**
3.			
4.			
5.			

REASON FOR NO WORK:

INFORMATION ON PROGRESS OF WORK – (Causes for delays, extent of delays, Plant, materials, etc.)

MATERIALS DELIVERED TO SITE

	DESCRIPTION
1.	
2.	
3.	

NOTE

INSPECTIONS AND TEST (Include comment pertaining to contractors activities)

	TESTS	RESULTS		COMMENT
1.				
2.				

SAMPLES COLLECTED

	SAMPLE TYPE	SAMPLE ID	COMMENTS
1.			
2.			
3.			

VERBAL INSTRUCTIONS GIVEN TO CONTRACTOR

	NAMES	INSTRUCTION	REACTION	REMARKS
1.				

2.				
3.				
4.				

NOTES –

DESIGN MODIFICATIONS

	DESCRIPTION OF MODIFICATION	REASON	ENGINEER APPROVAL?
1.			
2.			

VISITORS

	TIME	NAME	REPRESENTING	REMARKS
1.				
2.				
3.				
4.				
5.				

NOTES

Construction Items left on punch list:

- ~~Asphalt millings on tank hill road,~~
- ~~Paint outside electrical boxes and conduits~~
- Fix double doors on well house (no seal on bottom, the one door seems to be warped)
- ~~Strip heater (United has ordered)~~
- Abandon White Well House (save red house till 6 is operational)
- Water Service at 35 Gulch (change of condition) will probably begin installing meter Friday
- Finish installing Meters – 12 remaining (have been ordered)
- Tank Leak (will need a plan for correction submitted)
- ~~Mary Ann's Line (DEQ considering)~~
- ~~Coat mechanical air release valves *include the brass, needs to be a "potable water" coating~~
- Start up for pressure relief valve by Service Tech. Set valve at 2 to 3 feet higher than tank overflow

REMARKS – (Include controversial matters, information, instructions, disagreements, or any other miscellaneous remarks):

OVERSIGHT SIGNATURE:	DATE	PROJECT MANAGER INITIALS	DATE
Krista Hanson	**6/25/15**		

CONSTRUCTION DAILY ACTIVITY REPORT

TO: Montana Department of Environmental Quality Remediation Division - Mine Waste Cleanup Bureau Helena, MT Attn: Tom Henderson	REPORT NUMBER **#126**
PROJECT: Sand Coulee, water system replacement	DATE **Friday, 6-26-2015**
CONTRACTOR: Boland Construction Great Falls, MT	DEQ CONTRACT NUMBER
HAS ANYTHING DEVELOPED ON THE WORK WHICH MIGHT LEAD TO A CHANGE ORDER OR FINDING OF FACT? ☐ NO ☐ YES	WEATHER **Sunny**
HEALTH AND SAFETY Was a Job Safety Meeting held this date? ☐ NO ☐ YES	TEMPERATURE MINIMUM **80** MAXIMUM **95**

NUMBER OF CONTRACTOR'S EMPLOYEES

SUPERVISORY	OPERATORS	LABORERS	TOTAL
Steve C.	**1**	**3**	**7**

24 HOUR PRECIPITATION: **0**

SUBCONTRACTORS ON SITE

COMPANY NAME	TOTAL EMPLOYEES
1. **Healy Ruff (Rob B.)**	**1**

List the major items of equipment

	units	EQUIPMENT DESCRIPTION	Hours	Comments	
1.	**1**	**Mini Excavator**			
2.	**2**	**Frontend loaders**			
3.	**2**	**Skidsteers**			
4.	**1**	**Bulldog**			
5.	**1**	**Vibratory Roller**			
6.					
7.					

Notes:

CONSTRUCTION DAILY ACTIVITY REPORT

WORK PERFORMED TODAY

	LOCATION	BID ITEM NUMBER	DESCRIPTION OF WORK PERFORMED
1.	**Temporary Tank**		**Completed piping for temporary tank. Piped 3" line from valve for well #6 to temporary tank. Swabbed inside of pvc pipe with chlorine and flushed through hydrant hose. Thrust block didn't hold and blew reducer off. Fixed and put new thrust block in. Piped one inch line from transducer to tank. Chlorinated temporary tank and left to sit over weekend.**
2.	**Healy Ruff**		**Rob B. worked on setting up software on laptop.**
3.	**Roads**		**Put millings around driveway at 85 Dahn's (horse corral guy), filled in holes in Dahn's with millings.**
4.			
5.			

REASON FOR NO WORK:

INFORMATION ON PROGRESS OF WORK – (Causes for delays, extent of delays, Plant, materials, etc.)

MATERIALS DELIVERED TO SITE

	DESCRIPTION
1.	
2.	
3.	

NOTE

INSPECTIONS AND TEST (Include comment pertaining to contractors activities)

	TESTS	RESULTS		COMMENT
1.				
2.				

SAMPLES COLLECTED

	SAMPLE TYPE	SAMPLE ID	COMMENTS
1.			
2.			
3.			

CONSTRUCTION DAILY ACTIVITY REPORT

VERBAL INSTRUCTIONS GIVEN TO CONTRACTOR

	NAMES	INSTRUCTION	REACTION	REMARKS
1.				
2.				
3.				
4.				

NOTES –

DESIGN MODIFICATIONS

	DESCRIPTION OF MODIFICATION	REASON	ENGINEER APPROVAL?
1.			
2.			

VISITORS

	TIME	NAME	REPRESENTING	REMARKS
1.				
2.				
3.				
4.				
5.				

NOTES:

I was on site 2:00 to 5:00.

It was decided not to use temporary tank until after 4th of July.

Additional meter pit for field at Dahn's house 180?

Construction Items left on punch list:

- Fix double doors on well house (no seal on bottom, the one door seems to be warped)
- Abandon White Well House (save red house till 6 is operational)
- Water Service at 35 Gulch (change of condition) didn't do anything on this Friday
- Finish installing Meters – 12 remaining (have been ordered)
- Tank Leak (will need a plan for correction submitted)
- Start up for pressure relief valve by Service Tech. Set valve at 2 to 3 feet higher than tank overflow

REMARKS – (Include controversial matters, information, instructions, disagreements, or any other miscellaneous remarks):

OVERSIGHT SIGNATURE:	DATE	PROJECT MANAGER INITIALS	DATE
Krista Hanson	**6/26/15**		

CONSTRUCTION DAILY ACTIVITY REPORT

TO: Montana Department of Environmental Quality Remediation Division - Mine Waste Cleanup Bureau Helena, MT Attn: Tom Henderson	REPORT NUMBER **#127**
PROJECT: Sand Coulee, water system replacement	DATE **Monday, 6-29-2015**
CONTRACTOR: Boland Construction Great Falls, MT	DEQ CONTRACT NUMBER
HAS ANYTHING DEVELOPED ON THE WORK WHICH MIGHT LEAD TO A CHANGE ORDER OR FINDING OF FACT? ☐ NO ☐ YES	WEATHER **Sunny**
HEALTH AND SAFETY Was a Job Safety Meeting held this date? ☐ NO ☐ YES	TEMPERATURE MINIMUM **80** MAXIMUM **95**

NUMBER OF CONTRACTOR'S EMPLOYEES

SUPERVISORY	OPERATORS	LABORERS	TOTAL
Steve C.	**1**	**2**	**3**

24 HOUR PRECIPITATION: **0**

SUBCONTRACTORS ON SITE

COMPANY NAME	TOTAL EMPLOYEES
1.	

List the major items of equipment

	units	EQUIPMENT DESCRIPTION	Hours	Comments	
1.	**1**	**Mini Excavator**			
2.	**1**	**Frontend loader**			
3.	**1**	**whacker**			
4.					
5.					
6.					
7.					

Notes:

CONSTRUCTION DAILY ACTIVITY REPORT

WORK PERFORMED TODAY			
	LOCATION	BID ITEM NUMBER	DESCRIPTION OF WORK PERFORMED
1.	**House 35 Gulch**		**8 a.m. - 6 p.m. One operator and 2 laborers installed meter pit and curb stop at House 35 Gulch.**
2.	**Tank Hill Road**		**Graded tank hill road to achieve rougher surface.**
3.			
4.			
5.			

REASON FOR NO WORK:

INFORMATION ON PROGRESS OF WORK – (Causes for delays, extent of delays, Plant, materials, etc.)

MATERIALS DELIVERED TO SITE	
	DESCRIPTION
1.	
2.	
3.	

NOTE

INSPECTIONS AND TEST (Include comment pertaining to contractors activities)

	TESTS	RESULTS		COMMENT
1.				
2.				

SAMPLES COLLECTED

	SAMPLE TYPE	SAMPLE ID	COMMENTS
1.			
2.			
3.			

VERBAL INSTRUCTIONS GIVEN TO CONTRACTOR				
	NAMES	INSTRUCTION	REACTION	REMARKS
1.				

2.				
3.				
4.				

NOTES –

DESIGN MODIFICATIONS

	DESCRIPTION OF MODIFICATION	REASON	ENGINEER APPROVAL?
1.			
2.			

VISITORS

	TIME	NAME	REPRESENTING	REMARKS
1.				
2.				
3.				
4.				
5.				

NOTES:

Construction Items left on punch list:

- Fix double doors on well house (no seal on bottom, the one door seems to be warped)
- Abandon White Well House (save red house till 6 is operational)
- ~~Water Service at 35 Gulch (change of condition) Completed~~
- Finish installing Meters – 12 remaining (have been ordered)
- Tank Leak (will need a plan for correction submitted)
- Start up for pressure relief valve by Service Tech. Set valve at 2 to 3 feet higher than tank overflow

REMARKS – (Include controversial matters, information, instructions, disagreements, or any other miscellaneous remarks):

OVERSIGHT SIGNATURE:	DATE	PROJECT MANAGER INITIALS	DATE
Krista Hanson	**6/29/15**		

APPENDIX B-2

need field densities and core results

TD&H Engineering

REPORT of ASPHALT LABORATORY TEST RESULTS

Thomas, Dean & Hoskins, Inc.
1800 River Drive North
Great Falls, Montana 59401

Client:	Ed Boland Construction, Inc.	Report Number:	A-11456-290
Address:	4701 North Star Boulevard	Report Date:	6/19/2015
	Great Falls, MT 59405	Project:	Sand Coulee Water Project
		Project Number:	14-130-061
		Sample Number:	A-11456
Attn:	Mr. Steve Carlson	Date Sample Received:	6/17/2015

SAMPLE DATA

Asphalt Cement Type	PG 58-28 ✓
Asphalt Cement Specific Gravity	1.032 @ 15° C
Mix Design:	5/8" Asphalt (MPWSS Section 02510) ✓
Sampled By:	Cheyney Lorenz (TD&H)
Sample Location:	Dahn's Lane & Rosie Lane

LABORATORY DATA

Asphalt

Marshall Specimens, (ASTM D6926)	
Number of blows per side	50
Compaction Temperature, °F	275
Asphalt Content by Ignition (ASTM D6307)	5.7%
Max. Theoretical Specific Gravity (Rice's), (ASTM D2041)	2.426
Density, lbs/ft^3 (ASTM D2041)	151.0 (149.4)
Bulk Specific Gravity of Coarse/Fine Aggregate Blend	2.600 **

	Specimen No. A	B	C	AVG.
Measured Specific Gravity, Marshall Method (ASTM D2726)	2.308	2.296	2.294	2.299
Density, lbs/ft3, (ASTM D2726) 143.6	143.6	142.9	142.8	143.1
Voids in Mineral Aggregate (VMA) 16.7	16.3	16.8	16.8	16.6
Voids in Total Mix - % Air Voids (VTM) 3.9	4.9	5.4	5.4	5.2
Voids Filled with Asphalt Cement (VFA)	70.1	67.9	67.6	68.5
Marshall Properties, (ASTM D6927)				
Flow, 1/100 in.	9.3	9.2	9.9	9.4
Stability, lbs	3,296	2,456	2,714	2,822

** Bulk Specifc Gravity of Aggregate Blend back calculated from mix parameters outlined on project submittal.

Approved by:

Peter Klevberg, P.E.
Laboratory Manager

Technician(s):

CRN

REPORT of ASPHALT LABORATORY TEST RESULTS

Thomas, Dean & Hoskins, Inc.
1800 River Drive North
Great Falls, Montana 59401

Client:	Ed Boland Construction, Inc.	Report Number:	A-11455-290
Address:	4701 North Star Boulevard	Report Date:	6/19/2015
	Great Falls, MT 59405	Project:	Sand Coulee Water Project
		Project Number:	14-130-061
		Sample Number:	A-11455
Attn:	Mr. Steve Carlson	Date Sample Received:	6/17/2015

SAMPLE DATA

Asphalt Cement Type	PG 58-28
Asphalt Cement Specific Gravity	1.032 @ 15° C
Mix Design:	5/8" Asphalt (MPWSS Section 02510)
Sampled By:	Cheyney Lorenz (TD&H)
Sample Location:	Dahn's Lane & Miner's Lane

LABORATORY DATA

Asphalt

Marshall Specimens, (ASTM D6926)	
Number of blows per side	50
Compaction Temperature, °F	275
Asphalt Content by Ignition (ASTM D6307)	5.8%
Max. Theoretical Specific Gravity (Rice's), (ASTM D2041)	2.431
Density, lbs/ft^3 (ASTM D2041)	151.3
Bulk Specific Gravity of Coarse/Fine Aggregate Blend	2.600 **

	Specimen No. A	B	C	AVG.
Measured Specific Gravity, Marshall Method (ASTM D2726)	2.316	2.326	2.303	2.315
Density, lbs/ft3, (ASTM D2726)	144.2	144.8	143.3	144.1
Voids in Mineral Aggregate (VMA)	16.1	15.7	16.5	16.1
Voids in Total Mix - % Air Voids (VTM)	4.7	4.3	5.3	4.8
Voids Filled with Asphalt Cement (VFA)	70.6	72.5	68.2	70.4
Marshall Properties, (ASTM D6927) Flow, 1/100 in.	9.3	8.0	9.6	9.0
Stability, lbs	3,115	3,360	2,561	3,012

** Bulk Specific Gravity of Aggregate Blend back calculated from mix parameters outlined on project submittal.

Approved by:

Peter Klevberg, P.E.
Laboratory Manager

Technician(s):

CRN

Particle Size Distribution Report

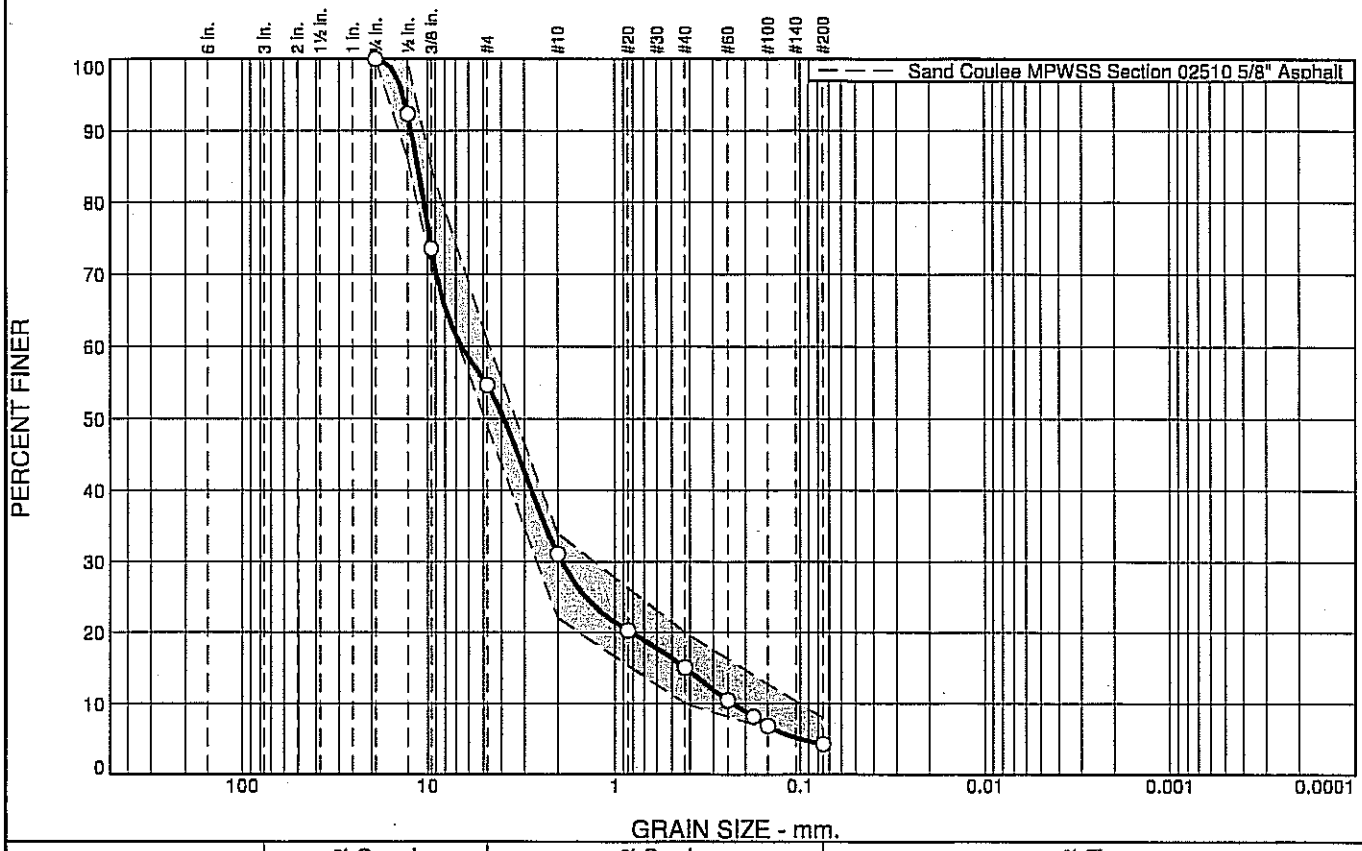

% +3"	% Gravel		% Sand			% Fines	
	Coarse	Fine	Coarse	Medium	Fine	Silt	Clay
0.0	0.0	45.3	23.6	16.0	10.9	4.2	

SIEVE SIZE	PERCENT FINER	SPEC.* PERCENT	PASS? (X=NO)
3/4"	100.0	100.0	
1/2"	92.4	86.0 - 100.0	
3/8"	73.6	71.0 - 85.0	
#4	54.7	49.0 - 61.0	
#10	31.1	22.0 - 34.0	
#20	20.3		
#40	15.1	10.0 - 20.0	
#60	10.5		
#80	8.2		
#100	6.8		
#200	4.2	4.0 - 8.0	

* Sand Coulee MPWSS Section 02510 5/8" Asphalt

Material Description

Well-Graded SAND with Gravel (Extracted Asphalt)

Asphalt

Atterberg Limits

PL= LL= PI=

Coefficients

D_{90}= 12.1621 D_{85}= 11.2612 D_{60}= 6.5614
D_{50}= 3.8816 D_{30}= 1.9077 D_{15}= 0.4190
D_{10}= 0.2344 C_u= 27.99 C_c= 2.37

Classification

USCS= SW AASHTO=

Remarks

Report No. A-11456-289

Location: Dahn's Lane & Rosie Lane
Sample Number: A-11456 **Date:**

TD&H Engineering

Thomas, Dean & Hoskins, Inc.
Engineering Consultants

Client: Boland Construction
Project: Boland -Sand Coulee

Project No: 14-130-061 **Figure**

Tested By: CRN **Checked By:**

Particle Size Distribution Report

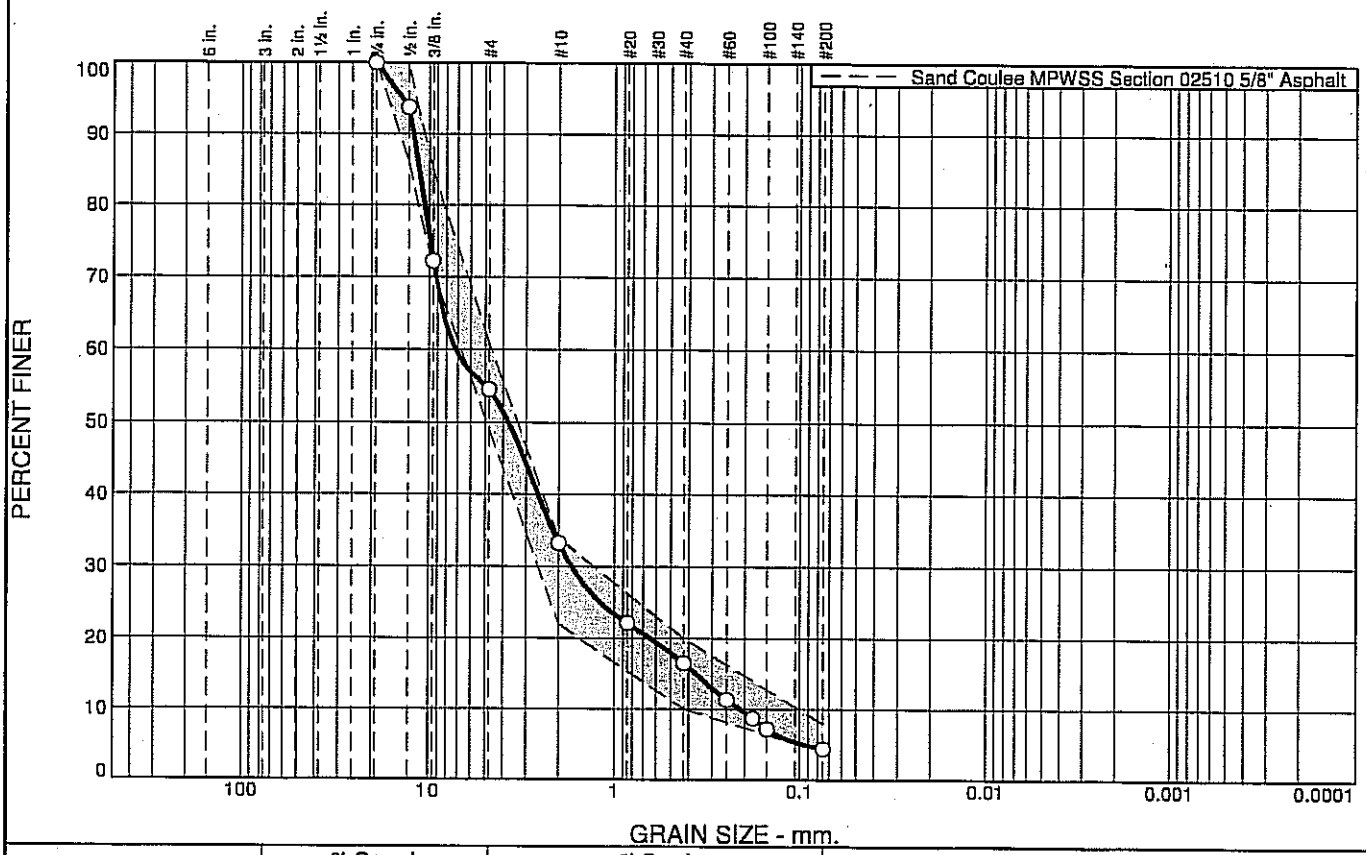

% +3"	% Gravel		% Sand			% Fines	
	Coarse	Fine	Coarse	Medium	Fine	Silt	Clay
0.0	0.0	45.5	21.2	16.7	12.2	4.4	

SIEVE SIZE	PERCENT FINER	SPEC.* PERCENT	PASS? (X=NO)
3/4"	100.0	100.0	
1/2"	93.8	86.0 - 100.0	
3/8"	72.2	71.0 - 85.0	
#4	54.5	49.0 - 61.0	
#10	33.3	22.0 - 34.0	
#20	22.1		
#40	16.6	10.0 - 20.0	
#60	11.3		
#80	8.8		
#100	7.2		
#200	4.4	4.0 - 8.0	

* Sand Coulee MPWSS Section 02510 5/8" Asphalt

Material Description

Well-Graded SAND with Gravel (Extracted Asphalt)

Asphalt

Atterberg Limits

PL= LL= PI=

Coefficients

D_{90}= 11.9766 D_{85}= 11.2131 D_{60}= 7.2084
D_{50}= 3.7502 D_{30}= 1.7026 D_{15}= 0.3636
D_{10}= 0.2114 C_u= 34.10 C_c= 1.90

Classification

USCS= SW AASHTO=

Remarks

Report No. A-11455-289

Location: Dahn's Lane & Miners Lane Asphalt
Sample Number: A-11455

Date:

TD&H Engineering

Thomas, Dean & Hoskins, Inc.
Engineering Consultants

Client: Boland Construction
Project: Boland -Sand Coulee

Project No: 14-130-061

Figure

Tested By: CRN **Checked By:**

Report of Pavement Field Density Tests (Nuclear)

Thomas, Dean, & Hoskins
1800 River Drive North
Great Falls, Montana 59401

Client:	Boland Construction	**Report Number:**	AC Compaction 6-17-2015
Address:	4701 North Star Boulevard	**Report Date:**	6/18/2015
	Great Falls, MT 59405	**Project:**	Sand Coulee Water
Attn:	Mr. Steve Carlson	**Project Number:**	14-130-061
		Test Method:	ASTM D-2950, D-3017

Asphalt Properties Used in Pavement

Mix No.	Maximum Marshall, pcf	Test Method		Maximum Theoretical, pcf	Test Method
GFS&G 5/8	143.6	ASTM D2726		149.4	ASTM D2401

Test Results

Test No.	Date	Description of Test Location	Measured Density pcf	Max. Density pcf	Reqd. Compaction %	Test Compaction %	Pass/ Fail
1	6/17/2015	E. Dahn Ln -From Fire Hydrant -9'N & 30'W	140.5	149.4	93.0	94.0	Pass
2	6/17/2015	E. Dahn Ln -85'E of Power Pole KZA9, 7'N *	142.2	149.4	93.0	95.2	Pass
3	6/17/2015	E. Dahn Ln -20'W of Power Pole KZA9, 6'N *	139.2	149.4	93.0	93.2	Pass
4	6/17/2015	E. Dahn Ln -85'E of Power Pole KZA8, 9'N *	142.7	149.4	93.0	95.5	Pass
5	6/17/2015	E. Dahn Ln -20'E of Power Pole KZA8, 4'N *	145.5	149.4	93.0	97.4	Pass
6	6/17/2015	E. Dahn Ln -85'W of Power Pole KZA7, 3'N *	143.1	149.4	93.0	95.8	Pass
7	6/17/2015	E. Dahn Ln -10'E of Power Pole KZA6, 4'N *	142.4	149.4	93.0	95.3	Pass
8	6/17/2015	E. Dahn Ln -90'W of Power Pole KZA6, 6'N *	143.3	149.4	93.0	95.9	Pass
9	6/17/2015	E. Dahn Ln -26'W of Power Pole KZA3, 18'N *	142.4	149.4	93.0	95.3	Pass
10	6/17/2015	E. Dahn Ln -26'E of Power Pole KZA2, 3'N *	140.5	149.4	93.0	94.0	Pass

pcf = pounds per cubic foot

Technician: KR

Deviations From Methods:

Remarks: Dahns Ln Assumed E-W. * N-S offsets from South Edge of Pavement.

Peter Klevberg, P.E.
Laboratory Manager

S.C. AC depth.

Report of Pavement Field Density Tests (Nuclear)

Thomas, Dean, & Hoskins
1800 River Drive North
Great Falls, Montana 59401

Client:	Boland Construction	**Report Number:**	AC Compaction 6-17-2015
Address:	4701 North Star Boulevard	**Report Date:**	6/18/2015
	Great Falls, MT 59405	**Project:**	Sand Coulee Water
Attn:	Mr. Steve Carlson	**Project Number:**	14-130-061
		Test Method:	ASTM D-2950, D-3017

Asphalt Properties Used in Pavement

Mix No.	Maximum Marshall, pcf	Test Method		Maximum Theoretical, pcf	Test Method
GFS&G 5/8	143.6	ASTM D2726		149.4	ASTM D2401

Test Results

Test No.	Date	Description of Test Location	Measured Density pcf	Max. Density pcf	Reqd. Compaction %	Test Compaction %	Pass/ Fail
11	6/17/2015	Dahn Ln -52'E of Power Pole KZA1, 4'N *	139.2	149.4	93.0	93.2	Pass
12	6/17/2015	Dahn Ln -50'W of Power Pole KZA1, 2'N *	139.5	149.4	93.0	93.4	Pass
13	6/17/2015	Dahn Ln -14'E of Power Pole K4, 6'N *	140.4	149.4	93.0	94.0	Pass
14	6/17/2015	Dahn Ln -66'W of FH @ Rosie & Dahl, 4'S of N Edge Pave	139.2	149.4	93.0	93.2	Pass
15	6/17/2015	Patch N of Church -58'N & 18'W of NE Corner of Church	144.5	149.4	93.0	96.7	Pass
16	6/17/2015	Lower Gulch Rd - 25'S & 6'E of SW Corner of House #71	144.7	149.4	93.0	96.9	Pass
17	6/17/2015	Lower Gulch Rd - 25'S & 16'W of SW Corner of House #73	142.1	149.4	93.0	95.1	Pass
18	6/17/2015	Lower Gulch Rd - 30'S & 75'E of SW Corner of House #73	145.6	149.4	93.0	97.5	Pass
19	6/17/2015	Lower Gulch Rd - 10'N & 66'W of Elect Box 601F	141.4	149.4	93.0	94.6	Pass
20	6/17/2015	Lower Gulch Rd - 20'N & 55'E of Elect Box 601F	141.2	149.4	93.0	94.5	Pass

pcf = pounds per cubic foot

Technician: KR

Deviations From Methods:

Remarks: Dahns Ln Assumed E-W. * N-S offsets from South Edge of Pavement.

AC density

Peter Klevberg, P.E.
Laboratory Manager

Report of Pavement Field Density Tests (Nuclear)

Thomas, Dean, & Hoskins
1800 River Drive North
Great Falls, Montana 59401

Client:	Boland Construction	**Report Number:**	AC Compaction 6-17-2015
Address:	4701 North Star Boulevard	**Report Date:**	6/18/2015
	Great Falls, MT 59405	**Project:**	Sand Coulee Water
Attn:	Mr. Steve Carlson	**Project Number:**	14-130-061
		Test Method:	ASTM D-2950, D-3017

Asphalt Properties Used in Pavement

Mix No.	Maximum Marshall, pcf	Test Method		Maximum Theoretical, pcf	Test Method
GFS&G 5/8	143.6	ASTM D2726		149.4	ASTM D2401

Test Results

Test No.	Date	Description of Test Location	Measured Density pcf	Max. Density pcf	Reqd. Compaction %	Test Compaction %	Pass/ Fail
21	6/17/2015	Miner's Ln Patch -64'S & 28'W of SW Corner of Post Office	142.9	149.4	93.0	95.6	Pass

pcf = pounds per cubic foot

Technician: KR

Deviations From Methods:

Remarks: Dahns Ln Assumed E-W.

AC density

Peter Kleyberg, P.E.
Laboratory Manager

REPORT OF GROUT TEST

Thomas, Dean & Hoskins

1800 River Drive North, Great Falls, MT 59401

Report Date: 11/24/14

Project Number: 14-130-061 Boland
Project: Sand Coulee Water
Client: Boland Construction
Address: 4701 North star Boulevard
Great Falls, MT 59405
Attn: Mr. Steve Carlson

Report Number: 4472

Well house Block

FIELD TEST CONDITIONS AND RESULTS

Date Placed: 10/27/2014
Time Sampled: 11:05 AM
Time Placed: 11:00 AM
Location of Sample: Interior Wall 6' to Top
Supplier: Mix on Site
Truck Number: NA
Ticket Number: NA
Mix Number: NA
Design Strength: 2000
Time Batched: 11:00 AM
Batch Size: .25cy
Slump: 9.0"
Air Content: NA
Grout Temp: 45 F
Ambient Temp: 38 F
Water Added:
Curing and Handling Notes:
Type of Masonry Units Used to Mold Specimens: Preformed Box
Number of Units Used: 1
Technician: JS

LABORATORY TEST RESULTS

Specimen	Test Date	Age	Load	Side 1	Side 2	Height	Area	Strength	Corrected Strength	Percent of Design
4472-A	11/3/2014	7	28880	3.30	3.33	6.33	10.99	2630		
4472-B	11/24/2014	28	43980	3.42	3.29	6.36	11.25	3910		196%
4472-C	11/24/2014	28	42420	3.30	3.34	6.24	11.02	3850		193%
4472-D		HOLD		3.31	3.28	6.31	10.86			

Average Strength: 3880

Remarks:

Copies to:

Reported by: Craig R Nadeau
Peter Klevberg, P.E.
FOR Laboratory Manager

REPORT OF 2x2 MORTAR CUBE TEST

Thomas, Dean & Hoskins

1800 River Drive North, Great Falls, MT 59401

Report Date: 11/14/14

Project Number: 14-130-061 Boland
Project: Sand Coulee Water
Client: Boland Construction
Address: 4701 North star Boulevard
Great Falls, MT 59405
Attn: Mr. Steve Carlson

Report Number: 4452

FIELD TEST CONDITIONS AND RESULTS (ASTM C31)

Well house masonry

Date Placed: 10/17/2014
Time Sampled: 10:25 AM
Location of Sample: Soldier Brick South Wall
Supplier: AmeriMix Mortar Type S AMX400S
Truck Number: NA
Ticket Number: NA
Mix Number: NA
Design Strength: 1800
Time Batched: NA
Time Placed: NA
Batch Size: NA
Flow: NA
Air Content: NA (ASTM C 172)
Mortar Temp: 52 F (ASTM C 1064)
Ambient Temp: 55 F
Water Content:
Technician: JS

LABORATORY TEST RESULTS (ASTM C 109)

Specimen	Test Date	Age	Load	Side 1	Side 2	Area	Strength	Percent of Design	Type of Fracture
4452-D	11/14/2014	28	15190	2.02	2.01	4.06	3740	208%	
4452-E	11/14/2014	28	16390	2.02	2.01	4.06	4035	224%	
4452-F		HOLD		2.03	2.00	4.06			
4452-A	10/24/2014	7	9380	2.05	2.01	4.12	2275		
4452-B	10/24/2014	7	10660	2.02	2.01	4.06	2625		
4452-C	11/14/2014	28	15270	2.03	2.01	4.08	3740	208%	

Remarks:

Copies to:

Reported by: _____
Peter Klevberg, P.E.
Concrete Laboratory Supervisor

REPORT OF CONCRETE CYLINDER TEST

Thomas, Dean & Hoskins
1800 River Dr. North, Great Falls, MT 59401

Report Date: 9/30/14

Project Number: 14-130-061 Boland
Project: Sand Coulee Water
Client: Boland Construction
Address: 4701 North star Boulevard
Great Falls, MT 59405
Attn: Mr. Steve Carlson

Report Number: 4271

FIELD TEST CONDITIONS AND RESULTS

Date Placed: 9/2/2014
Time Sampled: 2:10 PM
Location of Sample: Walls for New Pump House
Supplier: Great Falls Ready Mix
Truck Number: 76
Mix Number: 4500lbs
Design Strength: 4500
Batch Size: 10cy
Slump: 5.75"
Concrete Temp: 80 F
Water Added:
Initial Curing:
Max Field Curing Temp.:

Ticket Number: 92341
Time Placed: 2:05 PM
Time Batched: 12:54 PM

Air Content: 5.4%
Ambient Temp: 78 F
Technician: CS
Final Curing:
Min Field Curing Temp.:

LABORATORY TEST RESULTS

Specimen	Test Date	Age	Load	Diameter	Area	Strength	Percent of Design	Type of Fracture
4271-A	9/9/2014	7	125845	5.98	28.09	4480		2
4271-B	9/30/2014	28	146455	5.98	28.09	5215	116%	3
4271-C	9/30/2014	28	144805	5.98	28.09	5155	115%	3
4271-D		HOLD						

Remarks: 2 gal of plasticizer added by Detailed.

TYPES OF FRACTURE

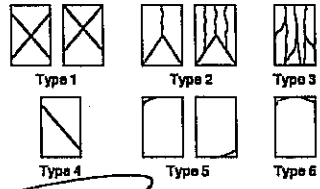

Copies to:

Reported by: _____
Peter Klevberg, PE
Laboratory Manager

REPORT OF CONCRETE CYLINDER TEST

Thomas, Dean & Hoskins
1800 River Dr. North, Great Falls, MT 59401

Report Date: 9/22/14

Project Number: 14-130-061 Boland
Project: Sand Coulee Water
Client: Boland Construction
Address: 4701 North star Boulevard
Great Falls, MT 59405
Attn: Mr. Steve Carlson

Report Number: 4328

FIELD TEST CONDITIONS AND RESULTS

Date Placed: 9/15/2014
Time Sampled: 7:59 AM
Location of Sample: Slab for New Pump House
Supplier: Great Falls Ready Mix
Truck Number: 76
Mix Number: 4500lbs
Design Strength: 4500
Batch Size: 0-6 of 13.5cy
Slump: 5.5"
Concrete Temp: 63 F
Water Added:
Initial Curing:
Max Field Curing Temp.:

Ticket Number: NP
Time Placed: 7:50 AM
Time Batched: NP

Air Content: 1.2%
Ambient Temp: 43 F
Technician: MS
Final Curing:
Min Field Curing Temp.:

LABORATORY TEST RESULTS

Specimen	Test Date	Age	Load	Diameter	Area	Strength	Percent of Design	Type of Fracture
4328-A	9/22/2014	7	136700	5.99	28.18	4850		2
4328-B	10/13/2014	28						
4328-C	10/13/2014	28						
4328-D		HOLD						

Remarks: 1 gal of plasticizer added.

Copies to:

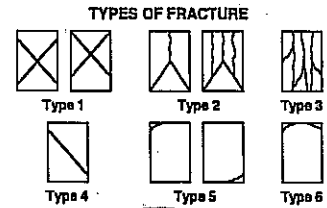

Reported by: _____
Peter Klevberg, PE
Laboratory Manager

REPORT OF CONCRETE CYLINDER TEST

Thomas, Dean & Hoskins
1800 River Dr. North, Great Falls, MT 59401
Report Date: 10/14/14

Project Number: 14-130-061 Boland
Project: Sand Coulee Water
Client: Boland Construction
Address: 4701 North star Boulevard
Great Falls, MT 59405
Attn: Mr. Steve Carlson

Report Number: 4328

FIELD TEST CONDITIONS AND RESULTS (ASTM C 31)

Date Placed: 9/15/2014
Time Sampled: 7:59 AM
Location of Sample: Slab for New Pump House
Supplier: Great Falls Ready Mix
Truck Number: 76
Mix Number: 4500lbs
Design Strength: 4500
Batch Size: 0-6 of 13.5cy
Slump: 5.5" (ASTM C 143)
Concrete Temp: 63 F (ASTM C 1064)
Water Added:
Initial Curing:
Max Field Curing Temp.:

Ticket Number: NP
Time Placed: 7:50 AM
Time Batched: NP

Air Content: 1.2% (ASTM C 231)
Ambient Temp: 43 F
Technician: MS
Final Curing:
Min Field Curing Temp.:

LABORATORY TEST RESULTS (ASTM C 39)

Specimen	Test Date	Age	Load	Diameter	Area	Strength	Percent of Design	Type of Fracture
4328-A	9/22/2014	7	136700	5.99	28.18	4850		2
4328-B	10/13/2014	28	171410	5.97	27.99	6120	136%	5
4328-C	10/13/2014	28	170380	5.98	28.09	6065	135%	2
4328-D		HOLD						

Remarks: 1 gal of plasticizer added.

Copies to:

TYPES OF FRACTURE

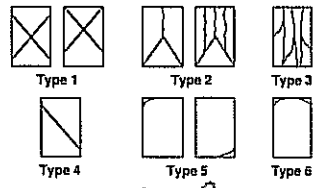

Reported by: Craig R Madsen
FOR Peter Klevberg, PE
Laboratory Manager

REPORT OF CONCRETE CYLINDER TEST

TD&H Engineering
Thomas, Dean & Hoskins
1800 River Dr. North, Great Falls, MT 59401
Report Date: 10/14/14

Project Number: 14-130-061 Boland
Report Number: 4413
Project: Sand Coulee Water
Client: Boland Construction
Address: 4701 North star Boulevard
Great Falls, MT 59405
Attn: Mr. Steve Carlson

FIELD TEST CONDITIONS AND RESULTS (ASTM C 31)

Date Placed: 10/7/2014
Time Sampled: 1:18 PM
Location of Sample: Tank Ring - 1st Lift
Supplier: Great Falls Ready Mix
Truck Number: NP
Ticket Number: 92661
Mix Number: NP
Time Placed: NP
Design Strength: 5000
Time Batched: 12:19 PM
Batch Size: 0-6.75 of 18cy
Slump: 8.25" (ASTM C 143)
Air Content: 5.4% (ASTM C 231)
Concrete Temp: 71 F (ASTM C 1064)
Ambient Temp: 72 F
Water Added:
Technician: WJC
Initial Curing:
Final Curing:
Max Field Curing Temp.:
Min Field Curing Temp.:

LABORATORY TEST RESULTS (ASTM C 39)

Specimen	Test Date	Age	Load	Diameter	Area	Strength	Percent of Design	Type of Fracture
4413-A	10/14/2014	7	146305	5.98	28.09	5205		2
4413-B	11/4/2014	28						
4413-C	11/4/2014	28						
4413-D		HOLD						

Remarks: 1.5 gal of plasticizer added.
Placed by pump, sampled from hopper.
3rd truck = slump=3.5" added 0.75 gal Plast.

TYPES OF FRACTURE

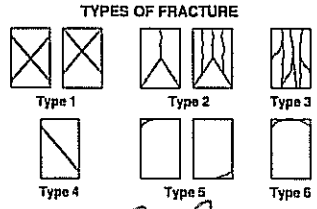

Copies to:

Reported by: Craig L Nadeau
FOR Peter Klevberg, PE
Laboratory Manager

Ralph McGillivray

From: Ralph McGillivray <ralphm@nciengineering.com>
Sent: Thursday, August 06, 2015 9:45 AM
To: Jake NCI; 'Mark Rhodes'
Subject: FW: 14-130-061 Boland CMT MAFB Concrete #4486 28 Day
Attachments: 14-130-061 Boland CMT MAFB Concrete #4486 28 Day (629 KB)

Cylinders broke high....

From: Scott Karaffa [mailto:scott@bolandconstruction.net]
Sent: Thursday, August 06, 2015 9:32 AM
To: 'Ralph McGillivray' <ralphm@nciengineering.com>
Subject: FW: 14-130-061 Boland CMT MAFB Concrete #4486 28 Day

Here is the concrete test for the water tank slab.

Scott

From: Cheyney Lorenz [mailto:Cheyney.Lorenz@tdhengineering.com]
Sent: Wednesday, August 05, 2015 1:31 PM
To: scott@bolandconstruction.net
Subject: Fwd: 14-130-061 Boland CMT MAFB Concrete #4486 28 Day

Cheyney Lorenz | Construction Manager
TD&H Engineering
1800 River Dr. N. | Great Falls, MT 59401
t:406.761.3010 | c:406.899.0188
www.tdhengineering.com

This email has been checked for viruses by Avast antivirus software.
www.avast.com

REPORT OF CONCRETE CYLINDER TEST

TD&H Engineering

Thomas, Dean & Hoskins
1800 River Dr. North, Great Falls, MT 59401

Report Date: 11/27/14

Project Number: 14-130-061 Boland
Report Number: 4486
Project: Sand Coulee Water
Client: Boland Construction
Address: 4701 North star Boulevard
Great Falls, MT 59405
Attn: Mr. Steve Carlson

FIELD TEST CONDITIONS AND RESULTS (ASTM C 31)

Date Placed: 10/30/2014
Time Sampled: 7:45 AM
Location of Sample: Water Tank - Exterior Wall and Center of Slab
Supplier: GFRM
Truck Number: 76
Ticket Number: 092903
Mix Number: UKD5000
Time Placed: 7:40 AM
Design Strength: 5000
Time Batched: 6:38 AM
Batch Size: 0-10 of 30cy
Slump: 4.0" (ASTM C 143)
Air Content: 1.6% (ASTM C 231)
Concrete Temp: 65 F (ASTM C 1064)
Ambient Temp: 38 F
Water Added:
Technician: JS
Initial Curing:
Final Curing:
Max Field Curing Temp.:
Min Field Curing Temp.:

LABORATORY TEST RESULTS (ASTM C 39)

Specimen	Test Date	Age	Load	Diameter	Area	Strength	Percent of Design	Type of Fracture
4486-A	11/6/2014	7	162080	5.98	28.09	5770		2
4486-B	11/27/2014	28	187435	5.96	27.90	6715	134%	2
4486-C	11/27/2014	28	184825	5.98	28.09	6580	132%	3
4486-D		HOLD						

Remarks: 2 gallons superplasticizer added on site

TYPES OF FRACTURE

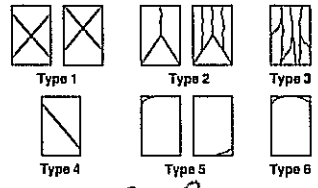

Copies to:

Reported by: Craig L Nadeau
FOR Peter Kievberg, PE
Laboratory Manager

REPORT OF CONCRETE CYLINDER TEST

Thomas, Dean & Hoskins
1800 River Dr. North, Great Falls, MT 59401

Report Date: 6/4/15

Project Number: 14-130-061 Boland
Project: Sand Coulee Water
Client: Boland Construction
Address: 4701 North star Boulevard
Great Falls, MT 59405
Attn: Mr. Steve Carlson

Report Number: 4688

FIELD TEST CONDITIONS AND RESULTS (ASTM C 31)

Date Placed: 5/7/2015
Time Sampled: 8:50 AM
Location of Sample: Meter Pads
Supplier: Boland
Truck Number: NA
Mix Number: NA
Design Strength: 4000
Batch Size: 1.25cy
Slump: 3.25" (ASTM C 143)
Concrete Temp: 53 F (ASTM C 1064)
Water Added:
Initial Curing: Field
Max Initial Curing Temp.:

Ticket Number: NA
Time Placed: 8:50 AM
Time Batched: 8:50 AM

Air Content: 2.3% (ASTM C 231)
Ambient Temp: 40 F
Technician: MS
Final Curing: Tank
Min Initial Curing Temp.:

LABORATORY TEST RESULTS (ASTM C 39 & C 1231)

Specimen	Test Date	Age	Load	Diameter	Area	Strength	Percent of Design	Type of Fracture
4688-A	5/14/2015	7	86770	4.03	12.76	6800		2
4688-B	6/4/2015	28	99475	4.02	12.69	7835	196%	3
4688-C	6/4/2015	28	103395	4.02	12.69	8145	204%	3
4688-D	6/4/2015	28	101820	4.02	12.69	8020	201%	3

Remarks: Boland batch on site.

Copies to:

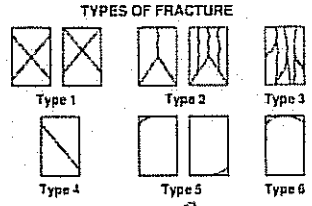

Reported by:

FOR Peter Nievberg, PE
Laboratory Manager

APPENDIX B-3

Sand Coulee
Water System Replacement
Boland Construction
Construction Progress Meeting No. 1 Minutes
*Items discussed at meeting

DATE: August (Tuesday) 26, 201

ATTENDANCE:

Name:	Representing:	Name:	Representing:
Tom Henderson	DEQ	Ralph McGillivray	NCI
Kent Luoma	District (not there)	Steve Carlson	Boland
Barry Boland	Boland	Scott	Boland

SCHEDULE:

Start Date: August 18, 2014
125 Calendar Days Contract Time
0 Calendar Days Contract Time Extensions which have been approved by Change Order
9 Contract Days, including today, have elapsed
116 Contract Days remaining
Scheduled End Date: December 20, 2014

WORK COMPLETED since NTP (August 18) ***work completed and work scheduled needs to be by Boland***

Pipe crew at Gulch Lane: started at 10+90 and went to East Hunter crossing

Pipe crew at Upper line: started at 1+20 and went to 3+66

Work on tank hill: Started road and culvert install, dug the footings for well house, install base course for footings

WORK SCHEDULED FOR UPCOMING WEEK

Crew at Fire Hall Lane: over the hill behind fire hall **future fill a concern? no, line will be as-designed*

Crew at Upper line: down to the creek

Tank hill: tomorrow conc at footings, foundation wall and slab

Meter pits at west end (existing main location) **NCI and Kent review where pit go*

OLD/NEW ISSUES

1. water service and main relocations: Gulch lane #77 and #81 **with Kent and Greg*, request to relocate FH

at fire hall off of the steep hill **NCI said this would cause problems with easement that is already filed in court house, Tom agreed. ****Kent should get any changes in service locations in writing.*** *Ralph needs to visit with Kent on status of the two house on end of the existing 6" water main, #31 gets meter and #27 does not, Steve the owner of the two houses Cory Shortair said he wanted both to get meter????*Shortair wanted to get meter and service to his land that Boland is using for storage, Boland will install the long service line for this on their dime, what about easement????*

2. Tom would check out payment for the cost to replace property pins destroyed due to the trench excavation, no way to save. **NCI will confirm the property pins that get wiped out due to the actual trench cut. Barry will give price to do this with NCI. Possibly NCI will do this under their contract with DEQ and so also need to give a price to Tom. Boland also to let NCI know which pins they have already destroyed*
3. Tom would take pay roll reports (on what schedule do not know)
4. Boland to post notices at job shack**Scott still working on this*
5. NCI and Kent would review meter pit locations if moving away from current curb stop service location because we do not want to set pit in a travel way. **Barry wanted Kent to locate all curb stops, Ralph said Boland is responsible for locating curb stops and that Kent can be asked to help if Boland cannot find.*
6. Any future water service request would need to be reviewed by Tom.
7. Boland to let NCI know if alignment has changed and **surveyor needs to reshot the fitting*.
8. Boland granted permission to use directional drill for water install at area of existing septic tank
9. Tank hill road, Jim Rodgers wanted to visit about. Tom wanted to be involved **after Barry has the first meeting, we discussed how to keep gravel from washing as what happened over the weekend*
10. Are NWenergy and 3Rivers utility companies coordinated with? **Barry said Scott would talk to them again… Tom said he would call Joel..*
11. **Are Bridges safe for the heavier vehicles? need to look at their condition*
12. **Also had a discussion on weather day, we would go by the contract documnts*

SUBMITTAL ISSUES / STATUS

1. #7 tank, Ralph sent out comments on 24th, probably good enough to start fabrication **need to get re-bar*
2. #8 Mixer, need new manufacturer
3. #10 Controls was reviewed and sent out **Balderston will be doing this directly*
4. # 9 Electrical, United, needs to have power feed changed

CONTRACTOR PAYMENTS

1. Ralph asked Jody for pay request without stored material invoices…**Tom said he was still reviewing "stored materials" for payment, it was decided to make the first request without sored materials and Boland would get stroed material on next request if such is approved. Ralph said he would sign that request today and let Tom take back to Helena. Barry gave Tom a letter on sored materials*

STATUS OF ANY CHANGES (affecting contract price or time)

1. Need more exploratory to find existing line at base of tank hill
2. Using import pipe bedding along Gulch Lane
3. Added a concrete trench block at Gulch Lane
4. Idaho approved type bedding (short run) at Gulch lane end of yesterday, then there was a discussion on when type was payable, Ralph said only if native materials where really clay, wet materials do not warrant type 2 stabilization, because proper dewater is not being done.

NEXT SCHEDULED MEETING

September 2, 2014 – 10:30 a.m. **Boland does not plan to work Labor day*

Sand Coulee
Water System Replacement
Boland Construction
Construction Progress Meeting No. 2 Minutes
*Items discussed at meeting

DATE: September (Tuesday) 2, 2014

ATTENDANCE:

Name:	Representing:	Name:	Representing:
Tom Henderson (not)	DEQ	Ralph McGillivray	NCI
Kent Luoma (not)	District	Steve Carlson	Boland
Barry Boland	Boland	Scott	Boland
Adam Jourdonnais	Hydrometrics	Jake Neil	NCI

SCHEDULE:

Start Date: August 18, 2014
125 Calendar Days Contract Time
0 Calendar Days Contract Time Extensions which have been approved by Change Order
16 Contract Days, including today, have elapsed
109 Contract Days remaining
Scheduled End Date: December 20, 2014
note: no work done on September 1, Labor day, *_question on "weather day" (half day for 8-22 rain)…please read General conditions art 12.03 B, my interpretation is, if contractor cannot work 60% of day and Engineer varies weather is prohibiting him to work and it is necessary to shut down then a weather day is allowed. We worked 50 % on 8-22 then no extra day. Contractor has to quit working before 40% of day is spent to get an extra day._

WORK COMPLETED since (August 26) ***work completed and work scheduled needs to be provided by Boland***

Pipe crew at Fire station: started at other side of East Hunter and went to 21+00

Pipe crew at Upper line: started at 3+66 and went to 7+53

Work on tank hill: Poured footings for well house, installing wall forms and installing pit run fill and base course

WORK SCHEDULED FOR UPCOMING WEEK

Crew at Fire Hall Lane: over the hill behind fire hall to valves and up around Church

Crew at Upper line: down to the creek…..

Tank hill: conc at foundation wall and slab, finish road

Meter pits at west end (Mike Andre doing existing 6" main location)

OLD/NEW ISSUES

1. **water service and main relocations**: *1)status of the two house on end of the existing 6" water main, #31 gets meter and #27 does not, Steve said the owner of the two houses, Cory Shortair, said he wanted both to get meter????Shortair wanted to get meter and service to his land that Boland is using for storage, Boland will install the long service line for this on their dime, what about easement????Tom approved the connection. *Need Kent/District's help.*
   Barry thought the town would find the existing curb stops. Ralph reminded Barry that Ralph said at both the pre-bid and preconstruction that Kent/District is only an aid, Contractor obligation was to find existing lines. Ralph researched contract documents, plan sheet D-17, district and owner, note 4, will determine location of (intent here is for new) curb stop and meter pit. Specification section 02660-1.1.B, Contractor will conduct exploratory excavation (did not say payable) as required to locate existing water service. In Section 15180-3.2 E says water district will locate and mark curb stops based on available data. And explained the District is limited by other duties and responsibilities, and goes on all services may not have a curb stop.
2. Tom would check out payment for the cost to replace property pins destroyed due to the trench excavation, no way to save. *NCI will confirm the property pins that get wiped out due to the actual trench cut. Barry will give price to do this with NCI. Possibly NCI will do this under their contract with DEQ and so also need to give a price to Tom. Boland also to let NCI know which pins they have already destroyed. *NCI needs to give this price to Tom*
3. NCI and Kent would review meter pit locations if moving away from current curb stop service location because we do not want to set pit in a travel way.
4. Boland to let NCI know if alignment has changed and *surveyor needs to reshoot the fitting*.
5. Tank hill road, Jim Rodgers wanted to visit after today's meeting. Tom wanted to be involved. Possibly use pulverized AC material, but not a pulverized concrete material.
6. Are Energy and 3Rivers utility companies coordinated with? *Barry said Scott would talk to them again…*they said they did this*
7. Surface restoration schedule?
8. **waterline testing, have started to organize for this, Ralph said he could possible move a gate valve to help with flushing but would not move a fire hydrant due to coverage.*
9. *soil proctors, need to keep ahead of materials, need to list what type material is behind each proctor, so NCI can make possible field corrections.*
10. *TDH will do concrete testing for wall pour today*
11. *We discussed with Mary Ann, someone from District needs to be at meeting to hear the situations on construction and also be able to help locate curb stops. She said she could possibly help. She would visit with Kent tonight.*
12. *Steve asked if they could use a paver block to set new curb stop on in lieu of gravel per detail, ralph aid he would visit with Idaho on this.*

SUBMITTAL ISSUES / STATUS

1. #7 tank, Ralph sent out comments again *need to get re-bar*
2. #8 Mixer, need new manufacturer**Scott said he has this and others, but has not had time to distribute*
3. # trusses, will be resubmitted to conform to design loading 20DL and 100 LL
4. # 9 Electrical, United, needs to have power feed changed

CONTRACTOR PAYMENTS

1. Pay request #1 would be processed without stored material invoices. Tom was still considering payment for stored material on site.

STATUS OF ANY CHANGES (affecting contract price or time)

1. Need more exploratory to find existing line at base of tank hill
2. Using import pipe bedding along Upper Lane and Fire hall line, due to coal and lots of rock.**quit installing imported bedding on fire house line this date*
3. The pit run quantity overrun at tank road figured out, weight of trucks not taken out of tickets, * *Steve quantities were about what design had originally.*

Meeting with Jim Rodgers, on the improvements for his tank hill road. Barry met with Rodgers last week also. *Today after the progress meeting Barry, Scott, Ralph and Jake met with Jim and his wife to discuss the proposed road improvements. Jim did not really want to use the base course material due to water erosion on the slope. He did not want the all AC pulverized material because it may get to slick, he said the half AC and half concrete pulverized material might be better and allow for more traction. Barry would check on cost and availability. Jim did not want us to widen road or change the super of road. Jim wanted us to consider doing his lane into his house area (additional 190' because of the use of his road by District, we said this was a Tom call.) We talked about drainage off the edge, but that would run water into neighbor's areas and may cause a wash area also. Barry suggested we do our improvement work on hill road when all truck traffic with construction was completed to try and save the improvements. Jim also mentioned the drainage from up on hill by tank would sometimes wash the lower end of the road in town area.*

NEXT SCHEDULED MEETING
September 9, 2014 – 10:30 a.m.

Sand Coulee
Water System Replacement
Boland Construction
Construction Progress Meeting No. 3 Minutes
*Items discussed at meeting

DATE: September (Tuesday) 9, 2014

ATTENDANCE:

Name:	Representing:	Name:	Representing:
Tom Henderson (not)	DEQ	Ralph McGillivray	NCI
Kent Luoma (not)	District	Steve Carlson	Boland
Barry Boland	Boland	Scott	Boland
Adam Jourdonnais	Hydrometrics	Jake Neil (not)	NCI
MaryAnn Freeman	District		

SCHEDULE:

Start Date: August 18, 2014
125 Calendar Days Contract Time
0 Calendar Days Contract Time Extensions which have been approved by Change Order
23 Contract Days, including today, have elapsed
102 Contract Days remaining
Scheduled End Date: December 20, 2014

WORK COMPLETED since (September 2) * *work completed and work scheduled needs to be provided by Boland*

Pipe crew at Fire station and west Dahn: Through valves and tees and helping with directional drill

Pipe crew at Dusko Alley: started at back of Methodist church and went east, also helping with directional drill

Work on tank hill: finish road at top, installing pit run fill and base course under slab

Andre: working on meter pits in the dry areas

Directional drill (406): bored under East Hunter and under rusty ditch at line from upper lane

WORK SCHEDULED FOR UPCOMING WEEK

Crew at west Dahn: to church and down Dahn

Crew at Dusko: helping with directional drill again east Hunter and also at rusty ditch cross near Gulch lane, and also setting up for directional drill on Miners lane (where we have drainfield)

Tank hill: Pour slab for well house on Monday

Meter pits: Mike Andre doing pits where we are dry

Directional drill: same as sewer pipe crew working at Dusko' alley

OLD/NEW ISSUES

1. **water service and main relocations**: 1)status of the two house on end of the existing 6" water main, #31 gets meter and #27 does not, Steve said the owner of the two houses, Cory Shortair, said he wanted both to get meter???? still needs Kent/District's help, Kent has said there is a service to houses 31 and 27 and locals said they have dug and cannot find this line **this has become a low priority, the Shortair house #482 across creek, Kent said he knew where curb stop is, maybe he can mark or show Boland.* **Maryann said she could help by knocking on doors to let people know construction is near there house.* Still gray on how much effort the Contractor does and what District does to find the existing curb stops and existing W/L alignments. **Steve said he has 51 hours of payable exploratory through September 5th, has 11.5 hours on Monday 8th, Ralph said we must now where Boland needs exploratory and to let NCI the time used on a daily basis. Boland is trying to build new distribution without damaging old water system and with only two valves in town and with water source from only one area, installing temporary water is hard thing to accomplish. Usually temporary water system would allow contractor to dig through the old piping system.*
2. Tom would check out payment for the cost to replace property pins destroyed due to the trench excavation, no way to save. NCI will confirm the property pins that get wiped out due to the actual trench cut. Barry will give price to do this with NCI. Possibly NCI will do this under their contract with DEQ and so also need to give a price to Tom. Boland also to let NCI know which pins they have already destroyed. NCI needs to give this price to Tom. Just about have this figured. **Ralph sent Tom email on this cost today*
3. NCI and Kent would review meter pit locations if moving away from current curb stop service location because we do not want to set pit in a travel way. We talked about leaving the pits with the old service alignments, in lieu of dog legging the service over to a pit not in traveled way. This would be tough to get data on location of the line. So pit can be driven over, we just want to beef up the surround surface next to pit. Install these pits with 2' depth of gravel around pit. Eventually a concrete collar at surface 4' diameter, 6" thick with 2-#4 hoop bars to strength the area adjacent to pit. **we need a price* We will not need post in those areas where pits are in lawn or landscape areas and now not in the areas where we pour the collars.
   The new pits already installed in the ground water will need to be dug up and recoated at all exposed buried metals. Barry we need a "per each" price to do this additional coating.
4. Tank hill road, we met with Jim Rodgers, use pulverized AC and concreter material. Still needs consideration. See notes from end of this report. **Scott would get samples from two different suppliers. Barry would figure if there is cost difference.*
5. Surface restoration schedule? **clean up looks good, but…trying to wait till meter pits and service lines and testing is completed. Andre will start working on meters on upper lane.*
6. Waterline testing status? **Boland needs a water source*
7. need soil proctor at well house native material and grab samples for future locations? **Supposedly the well house and two other samples were taken in days ago so we should have, Scott would check.*
8. Mary Ann and Mike (District) have been helping with records and locations of curb stops and w/l alignments. More payable exploratory has been authorized for locations. Payable exploratory needs to be agreed to on a daily basis.
9. Steve asked if they could use a paver block to set new curb stop on in lieu of gravel per detail, Ralph aid he would visit with Idaho on this. **Ralph/Idaho?*
10. Steve we need to get your daily reports on a daily basis.

11. Ralph gone next week 15, 16, 17…Idaho is full time
12. Ralph talked to Larry Butler, Fire chief, 899-5661, he said he wanted a truck fill station outside, I said I never heard this, and it was not part of project and he said he would build his own pipe system. I said we gave him a 2" service inside station and he said yes for winter time filling. He also wanted the big bung changed to face away from main. Boland said they would do this.
13. Any pay roll report reviews yet? **Jody will complete and will be at next meeting for Tom.*
14. Directional drill submittal, the sub "406 Underground" did not have any fusible PVC installation experience shown and Owner said the same in field. Barry said he would stand behind his sub and write a letter to this fact. Also Barry would run pipe deflection test on the fusible PVC after it is installed to show pipe is still round. **Ralph looked through pipe and it looked good from inside so deflection testing not necessary*
15. **Hydrant height with connect to existing 6" water????*
16. **Service line to house 529, we need to connect to the existing water service pipe opposite the side we show on dwg.*
17. ***District** needs to be prepared to deal with community on changes to water service location and the fact District cannot change water service material to go into the house.*

SUBMITTAL ISSUES / STATUS

1. #7 tank, a telephone meeting was conducted on Septem 4, need rebar, still have problem with design for foundation gravel, this is a tank supplier issue, the test station for a passive system is their issue also. **Ralph would check with Engineering America, and also check with the structural difference between Belt tank and SC tank with them*.
2. #8 Mixer, new manufacturer was submitted and approved
3. # trusses, resubmittal is in and approved
4. # 9 Electrical power feed is in

CONTRACTOR PAYMENTS

1. Pay request #2 is coming up, is stored material payable? **Tom?*

STATUS OF ANY CHANGES (affecting contract price or time)

1. Need more exploratory to find existing line at base of tank hill
2. and more effort to tract exploratory payable item.
3. Using import pipe bedding on most lines
4. A change for adding coating to buried water appurtenances will get an additional coating. and also for extra effort to install in the traveled way.

Meeting with Jim Rodgers, on the improvements for his tank hill road. Barry met with Rodgers last week also. Today after the progress meeting Barry, Scott, Ralph and Jake met with Jim and his wife to discuss the proposed road improvements. Jim did not really want to use the base course material due to water erosion on the slope. He did not want the all AC pulverized material because it may get to slick, he said the half AC and half concrete pulverized material might be better and allow for more traction. Barry would check on cost and availability. Jim did not want us to widen road or change the super of road. Jim wanted us to consider doing his lane into his house area (additional 190' because of the use of his road by District, we said this was a Tom call.) We talked about drainage off the edge, but that would run water into neighbor's areas and may cause a wash area also. Barry suggested we do our improvement work on hill road when all truck traffic with construction was completed to try and save the improvements. Jim also mentioned the drainage from up on hill by tank would sometimes wash the lower end of the road in town area.

NEXT SCHEDULED MEETING

Sand Coulee
Water System Replacement
Boland Construction
Construction Progress Meeting No. 4 Minutes

DATE: September 16, 2014

ATTENDANCE:

Name:	Representing:	Name:	Representing:
Tom Henderson	DEQ	Steve Carlson	EBC
Mary Ann Freeman	SCWS	Barry Boland	EBC
Pat Darko	SCWSD	Scott Karaffa	EBC
Idaho Trenberth	NCI	Krista Hanson	NCI

SCHEDULE:

Start Date: August 18, 2014
125 Calendar Days Contract Time
0 Calendar Days Contract Time Extensions which have been approved by Change Order
1 Weather Day is Under Consideration
30 Contract Days, including today, have elapsed
95 Contract Days remaining
Scheduled End Date: December 20, 2014

WORK COMPLETED SINCE LAST PROGRESS MEETING ON: September 16, 2014

1. *All specified directional drilling is complete and all tie-ins to gasketed pipe have been made .*
2. *The concrete floor slab for the well house has been poured and finished.*
3. *Installation of 8" water main and appurtenances has begun along Dahn's lane.*

WORK SCHEDULED FOR UPCOMING WEEK

1. *Continue installation of 8" water main and appurtenances along Dahns's Lane, Miner's Lane and Fortune Lane.*
2. *Excavation for the water storage tank foundation.*
3. *Continue installation of 8" water main and appurtenances through Dusko's Alley.*
4. *Begin Masonry work at well house (if door frames can be obtained)*

OLD ISSUES/RESOLUTION

1. Service and meter at House #27? *District will determine if service to this location is necessary.*

2. Service and meter at House # 31 and 27? *District and Contractor have been unable to locate either the curb box or the service line. It is hoped that the service line will be discovered during installation of the nearby hydrant.*

3. Service and meter at House # 482? *District and Contractor have been unable to locate either the curb box or the service line.*

4. Responsibility for locating curb stops and service line alignment, and coordination of efforts between Contractor and District. *District and contractor are working together to locate. Efforts to date have been mostly successful.*

5. Payable exploration. *Within reason, exploration for service lines is payable*

6. Payment for replacement of property pins in direct conflict with utility installation.
   - Is this payable? *Not yet determined. Tom will follow up.*
   - Unit cost (Boland)?
   - Payable as change order to construction contract or as amendment to engineering contract?

7. Unit cost for concrete collars around meter pits installed in areas of vehicular travel? *Barry will provide.*

8. Unit cost for coating exposed metallic service line and meter pit components. *Barry will provide.*
   - Curb stop & fittings? *No*
   - Curb box? *Yes*
   - Meter pit connection fittings? *No*
   - Interior pit metallic fittings & parts? *No*

9. Source of water for flushing and testing of new mains? *District can provide water. Coordination between District and Contractor will be necessary to avoid overtaxing the system.*

10. Surfacing limits and materials for rehabilitation of Tank Hill Road? *District to obtain written agreement with Jim Rodgers specific to materials and surfacing limits. Per Barry – minimal price difference between crushed asphalt and base course gravel.*

11. Proctor(s) for backfill materials at well house foundation? *Steve will give to Idaho after meeting.*

12. Contractor's daily reports to be submitted daily. *Presently current.*

13. Rotate hydrant at Fire Hall 90°such that 5-1/2" bung faces East Hunter Road? *Contractor will rotate hydrant.*

14. Certified payrolls submitted to Tom? *None yet. Jodi has reports ready to submit.*

15. Verification of directional driller's qualifications? *Per Barry – this information was previously submitted to Ralph.*

16. Height/depth of bury for hydrants to be installed on existing 6" main? *To be determined after depth of existing main is known.*

17. House #529 – service line is on opposite side of house from location shown on drawings. Has this issue been resolved? *Yes. New service line will connect to existing on north side of the house.*

18. *Payment for stored materials can possibly be made with proper documentation. Contractor to submit with Application for payment No.2.*

19. *Installation of 25 HP pump in lieu of the specified 10 HP will require upsizing of electrical service, switchgear, wiring and conduits, and installation of VFD. Per Tom, he has requested pricing for 25 HP pump from Chris Boland. Barry will follow up. NCI and Hydrometrics to work out details.*

NEW ISSUES

1. Record drawings. *Idaho will review changes indicated by each crew foreman. Steve will transfer foremen's notes to master drawings.*

2. Seven day compressive strength test results for Well House foundation walls concrete? *Steve will give to Idaho after meeting. Seven day strength is close to required 28-day strength.*

3. Verification of trench backfill compaction. *Contractor and Engineer (on September 15th) collected four soil samples for moisture–density analysis with corresponding nuclear gage moisture density measurements at select locations where backfill has occurred. A comparison of this data against prior nuclear gage tests in similar soils will be made to judge adequacy of compaction.*

4. Relocate hydrant at Fire Hall? *Fire Chief has requested (demanded?) that the hydrant at the Fire Hall be relocated. Tom will consider if a compelling reason is given and if requested by District.*

SUBMITTAL ISSUES / STATUS

1. Mostly current – see attached Submittal Schedule.

CONTRACTOR PAYMENTS

1. Contractor to submit Application for Payment #2 for work completed through September 19th to Engineer by September 22nd. *Submit 3 originals.*

2. Unit price item quantity tracking? *Contractor has been tracking quantities of completed work. NCI needs to verify these quantities prior to submitting request for payment.*

STATUS OF ANY CHANGES (affecting contract price or time)

1. Exploratory excavation hours have greatly exceeded bid quantity. Considerable additional exploration will likely be required.

2. Import Type 1 Pipe Bedding has *not* exceeded bid quantity. Current pipe laying work indicates that native materials may be suitable for bedding as pipe laying progresses to the east.

NEXT SCHEDULED MEETING

September 22, 2014 – 11:00 am

Sand Coulee
Water System Replacement
Boland Construction
Construction Progress Meeting No. 5 Minutes

DATE: September 22, 2014

ATTENDANCE:

Name:	Representing:	Name:	Representing:
Tom Henderson	DEQ	Steve Carlson	EBC
Mary Ann Freeman	SCWS	Barry Boland (not)	EBC
Pat Darko	SCWSD	Scott Karaffa	EBC
Ralph McGillivray	NCI	Krista Hanson	NCI
Mark Rhodes	Hydrometrics	Jake Neil	NCI
Kent Luoma	District		

SCHEDULE:

Start Date: August 18, 2014
125 Calendar Days Contract Time
0 Calendar Days Contract Time Extensions which have been approved by Change Order
1* *Weather Day was considered…
36 Contract Days, including today, have elapsed
89 Contract Days remaining
Scheduled End Date: December 20, 2014

WORK COMPLETED SINCE LAST PROGRESS MEETING ON: September 16, 2014

1. *The excavation for tank is completed…..rip rap at drainage pipe*
2. *Installation of 8" water main …..West Dahn to Miner's Lane, and all directional drilling*
3. *8 meter pits installed*

WORK SCHEDULED FOR UPCOMING WEEK

1. *Continue installation of 8" water main and appurtenances along Rosie's Lane, Miner's Lane and Fortune Lane.*
2. *Forming, rebar at the water storage tank foundation, gravel base and tank piping*
3. *Continue installation of 8" water main and appurtenances through Dusko's Alley and possibly alley behind PO*
4. *Begin masonry work at well house (Copper)*

OLD ISSUES/RESOLUTION

1. Service and meter at House # 31 and 27? *District and Contractor have been unable to locate either the curb box or the service line. It is hoped that the service line will be discovered during installation of the nearby hydrant…lower priority for now. *Question, do both houses have same service line? is #27 in District? What does District want to do. Cannot leave two houses on same service pipe may need to add a new 2nd service line?*

2. Service and meter at House # 482 (the only house across rusty ditch) **Kent said he is able to locate the curb box and the service line.*

3. Responsibility for locating curb stops and service line alignment, and coordination of efforts between Contractor and District. *District and contractor are working together to locate. Efforts to date have been mostly successful. *Kent will be around more from now on.*

4. Payable exploration. *Within reason, exploration for service lines is payable. Direct payment is when District cannot find or the existing water was not correct on plans.*

5. Payment for replacement of property pins in direct conflict with utility installation.
   - Is this payable? *Not yet determined. Tom will follow up. *possible*
   - Unit cost (Boland)?
   - Payable as change order to construction contract or as amendment to engineering contract?

6. Unit cost for concrete collars around meter pits installed in areas of vehicular travel? *Barry will provide.*

7. Unit cost for coating exposed metallic service line and meter pit components that will be and are installed in ground water. *Barry will provide a cost. We need to visit about…We would like to see all metals coated after install. Some items like curb box can be coated before install*
   - Curb stop & fittings?
   - Curb box? *Yes*
   - Meter pit connection fittings?
   - Interior pit metallic fittings & parts? *No*

8. Surfacing limits and materials for rehabilitation of Tank Hill Road? *District to obtain written agreement with Jim Rodgers specific to materials and surfacing limits. Per Barry – minimal price difference between crushed asphalt and base course gravel. Boland left two samples at NCI office, 1.5"minus from Dickman and sample from Sierra. I would say the Sierra sample looked better. Also Tom any thoughts on the additional area asked by Jim. *Tom said we probably could not add in the extra. *It was suggested the District write a letter to Jim stating that this is a onetime only improvement and no additional effort would be forth coming. *Scott said Boland already made arrangements with Sierra to stockpile their material and this effort would not take place to end of construction.*

9. Verification of trench backfill compaction. *Contractor and Engineer (on September 15th) collected four soil samples for moisture–density analysis with corresponding nuclear gage moisture density measurements at select locations where backfill has occurred. A comparison of this data against prior nuclear gage tests in similar soils will be made to judge adequacy of compaction.* Proctor(s) for backfill materials was researched and there is a report by TDH given out last Friday 19th. **Jake gave a comment on what Boland's TDH report offered, that with field densities with hydrocarbon material in them NCI was not getting correct moisture. *Jake said he agreed with the TDH report and we were probably getting better compaction then what our densometer was reading. Apparently the densometer reads hydrogen as water and so increasing the moisture reading. And the fact the Boland crews were doing*

shallower lifts and making more effort. Jake wanted Boland to do one more in place proctor sample and density test in a spot that was we had not got as much compaction effort. Maybe somewhere along Gulch Lane.

10. Certified payrolls submitted to Tom? *None yet. Jodi has reports ready to submit and will mail to Tom. *Tom said reports were coming in.*

11. Verification of directional driller's qualifications? *Per Barry – this information was previously submitted but Ralph rejected because 406 had no fusible PVC experience. NCI needs a letter from Barry he would take responsibility for 406 install. I originally asked a mandrel be run, but after being able to lamp one end to the other the mandrel request was dropped. Next view was not a clear view so we run Boland's camera through and it showed full pipe.*

12. Height/depth of bury for hydrants to be installed on existing 6" main? (ground water was 2.5' from surface) *To be determined after depth of existing main is known. Option for District is to close weep hole and if hydrant is used the water in barrel would need to be hand pumped out. Possibly raise hydrant with landscaping to get out of ground water. *This was explained, Kent's opinion was to put hydrants in and move on, he was not too concerned with freezing.*

13. House #529 – service line is on opposite side of house from location shown on drawings. Has this issue been resolved? *Yes. New service line will connect to existing on north side of the house. We need to be careful with directions on notes. Plans have an assumed direction given.*

14. *Payment for stored materials can possibly be made with proper documentation. Contractor to submit with Application for payment No.2. *Tom needs a letter from Barry requesting and conveying why DEQ should pay for stored materials.*

15. *Installation of 25 HP pump in lieu of the specified 10 HP will require upsizing of electrical service, switchgear, wiring and conduits, and installation of VFD. Per Tom, he has requested pricing for 25 HP pump from Chris Boland. Barry will follow up. NCI and Hydrometrics to work out details. NCI contacted Joel with Northwestern about larger service. And this may not be too big of a deal if we go the bigger HP, possibly using 240/480 volt and require a transformer for lower voltage. The existing pumps are on a lower voltage. Still need to know what Kent and District want for pump size (match system hydraulics or match with water rights). *Both the District and Tom said today they want the larger 25HP pumps (match water rights flow). Also today after meeting District and Tom said to drop existing pump #3 from the project. District and Tom agreed to 480 volt for the 25 HP pump(s) and unit heaters. NCI and Hydrometrics have their direction.*

16. Record drawings. *Idaho will review changes indicated by each crew foreman. Steve will transfer foremen's notes to master drawings. NCI needs to review in field.*

17. Relocate hydrant at Fire Hall? *Fire Chief has requested (demanded?) that the hydrant at the Fire Hall be relocated. Tom will consider if a compelling reason is given and if requested by District. *This is ongoing, Ralph explained he had a conversation with Larry and told Larry a truck fill station was never in plans, and Larry said he would build his own piping to get his truck fill station.*

NEW ISSUES

1. Water tank foundation, excavation and stabile base. NCI had Boland go down 18" below the 6" depth that Boland was anticipating to below the bottom of foundation wall, because of a clay lenses at the

Boland's elevation. Boland would refill this area with gravel. The interior area of the tank was also excavated per the geotechnical report. **Scott said Barry had a letter to share on this issue*.

2. The pipe line at Miner's lane sheet D-13, station 2+29 to 5+00 was designed with flat alignment and no air release. House 155 on Miners lane had previously requested a changed service location and wanted to tie into the main at 3+00 the greatest depth at the original ground. Options were discussed and District said they would rather deal with maintenance on air release then have a future problem with the house service buried 16'. Mark said we could add an air release manhole and keep the main at 6.5' depth. This adds the cost of an AR manhole. We are hoping Boland (Barry) gives a cost break in this area since they do not have to dig the main in at 16'.

3. We did exploratory at the front side of the old "Miner's Bar" across Miners street from Post office. Some locals were thinking this building was originally a service station and the fuel tanks were not removed (at our design alignment). No tank or smell of hydrocarbons was noted with exploration. Status? *Leave alignment as is. We may also hit a drain field closer to Dahn Street.

SUBMITTAL ISSUES / STATUS

1. Mostly current, caught up on Friday 19th. Still waiting for pump size to final electrical power supply #9 and the control submittal #10.

CONTRACTOR PAYMENTS

1. Contractor to submit Application for Payment #2 for work completed through September 19th to Engineer by September 22nd. *Submit 3 originals.*

2. Unit price item quantity tracking? *Contractor has been tracking quantities of completed work. NCI needs to verify these quantities prior to submitting request for payment.*

STATUS OF ANY CHANGES (affecting contract price or time)

1. Exploratory excavation hours have greatly exceeded bid quantity. Considerable additional exploration will likely be required.

2. Import Type 1 Pipe Bedding has *not* exceeded bid quantity. Current pipe laying work indicates that native materials may be suitable for bedding as pipe laying progresses to the east. Status? *mostly imported is being used

NEXT SCHEDULED MEETING

Monday September 29, 2014 – 11:00 am

Sand Coulee
Water System Replacement
Boland Construction
Construction Progress Meeting No. 6 Minutes

DATE: September 29, 2014

ATTENDANCE:

Name:	Representing:	Name:	Representing:
Tom Henderson	DEQ	Steve Carlson	EBC
Mary Ann Freeman	SCWS	Barry Boland	EBC
Pat Darko (not)	SCWSD	Scott Karaffa (not)	EBC
Ralph McGillivray	NCI	Krista Hanson	NCI
Mark Rhodes (not)	Hydrometrics	Jake Neil (not)	NCI
Kent Luoma	District		

SCHEDULE:

Start Date: August 18, 2014
125 Calendar Days Contract Time
0 Calendar Days Contract Time Extensions which have been approved by Change Order
1* *Weather Day was considered…
43 Contract Days, including today, have elapsed
82 Contract Days remaining
Scheduled End Date: December 20, 2014

WORK COMPLETED SINCE LAST PROGRESS MEETING ON: September 22, 2014

1. *@ tank: inside piping installed, stabilization for tank base is completed…..*
2. *@ well house…nothing*
3. *Installation of 8" water main …..main along Miner's Lane sht D-13, Fire hydrant runs at 4+74 Dusko alley and at 9+12 both to East Hunter, and main along Miner's Lane, sht D-11*
4. *meter pits being installed*
5. **as a reminder, at end of last week 9-26, 5062' of 8" pipe installed (8957' is total) and also 419' of 6" pipe installed (847' is total fire hydrant line)*

WORK SCHEDULED FOR UPCOMING WEEK

1. *Continue installation of 8" water main and appurtenances along Miner's Lane and Fortune Lane.*
2. *Forming, rebar at the water storage tank foundation. *pour foundation wall next week Wednesday*
3. *Continue installation of 8" water main and appurtenances along Miner's Lane by Post Office and*

possibly alley behind PO

4. *Begin masonry work at well house (Cooper)*

5. **possibly do main line at toe of tank hill and Gulch Lane*

6. ** Barry said they can pour tank foundation, but will need tank person there to set leveling adjusters. Tank materials are to be on site by end of October, Boland needs these materials before slab can be poured because the starter ring is in with these materials.*

OLD ISSUES/RESOLUTION

1. Service and meter at House # 31 and 27? District and Contractor have been unable to locate either the curb box or the service line. It is hoped that the service line will be discovered during installation of the nearby hydrant…lower priority for now. Question, do both houses have same service line? Is #27 in District? *What does District want to do?* Cannot leave two houses on same service pipe may need to add a new 2nd service line? **District decided to service #31 and do nothing with #27 same as original thought. They think #27 and #31 share a service line, and also house #27 is abandoned and not in District per say.*

2. Service and meter at House # 482 (the only house across rusty ditch) *Kent said he is able to locate the curb box and the service line. *Kent would try to mark in the field this curb stop.*

3. Responsibility for locating curb stops and service line alignment, and coordination of efforts between Contractor and District. *Anything new? *Kent and Steve are continuing the locating process and getting these locations marked.*

4. Payment for replacement of property pins in direct conflict with utility installation. **Ralph will send Barry the email on this work.*

5. Unit cost for concrete collars around meter pits installed in areas of vehicular travel? *Barry will provide cost.*

6. Unit cost for coating exposed metallic service line and meter pit components that will be and are installed in ground water. *Barry will provide a cost. We need to visit about…We would like to see all metals coated after install. Some items like curb box can be coated before install *Ralph needs to see submittal on coating material.*

7. Surfacing limits and materials for rehabilitation of Tank Hill Road? District to obtain written agreement with Jim Rodgers specific to materials and surfacing limits. Per Barry – minimal price difference between crushed asphalt and base course gravel. Boland left two samples at NCI office, 1.5"minus from Dickman and sample from Sierra. I would say the Sierra sample looked better. Also Tom any thoughts on the additional area asked by Jim. Tom said we probably could not add in the extra. *It was suggested the District write a letter to Jim stating that this is a onetime only improvement and no additional effort would be forth coming. Status? *District will get their attorney to draft this letter.* Scott said Boland already made arrangements with Sierra to stockpile their material and this effort would not take place to end of construction.

8. Verification of trench backfill compaction. Contractor and Engineer (on September 15th) collected four soil samples for moisture–density analysis with corresponding nuclear gage moisture density measurements at select locations where backfill has occurred. A comparison of this data against prior

nuclear gage tests in similar soils will be made to judge adequacy of compaction. Proctor(s) for backfill materials was researched and there is a report by TDH given out last Friday 19th. Jake gave a comment on what Boland's TDH report offered, that with field densities with hydrocarbon material in them NCI was not getting correct moisture. Jake said he agreed with the TDH report and we were probably getting better compaction then what our densometer was reading. Apparently the densometer reads hydrogen as water and so increasing the moisture reading. And the fact the Boland crews were doing shallower lifts and making more effort. *Jake wanted Boland to do one more in place proctor sample and density test in a spot that was we had not got as much compaction effort. Maybe somewhere along Gulch Lane. Status? *Barry said he wanted to get paid for the extra proctors and for TDH evaluation of situation, Ralph said for Barry to provide a letter to that effect.*

9. Last week we decided to put hydrants in along existing 6" water and not be concerned with freezing. This week do we need to order shorter barrel hydrants, because the existing main is not buried at 6.5' that the new hydrants are shipped as??? **thought was to explore at the three new hydrants and get a vertical depth to order these hydrant barrels*.

10. Payment for stored materials can possibly be made with proper documentation. Contractor to submit with Application for payment No.2. Tom needs a letter from Barry requesting and conveying why DEQ should pay for stored materials. *No stored material was requested with 9-19 pay request.*

11. Installation of 25 HP pump in lieu of the specified 10 HP will require upsizing of electrical service, switchgear, wiring and conduits, and installation of VFD. Per Tom, he has requested pricing for 25 HP pump from Chris Boland. Barry will follow up. NCI and Hydrometrics to work out details. NCI contacted Joel with Northwestern about larger service. And this may not be too big of a deal if we go the bigger HP, possibly using 240/480 volt and require a transformer for lower voltage. The existing pumps are on a lower voltage. Still need to know what Kent and District want for pump size (match system hydraulics or match with water rights). Both the District and Tom said today they want the larger 25HP pumps (match water rights flow). Also today after meeting District and Tom said to drop existing pump #3 from the project. District and Tom agreed to 480 volt for the 25 HP pump(s) and unit heaters. NCI and Hydrometrics have their direction. *NCI is working on this. Jake said he is resizing everything. This process will inevitably hold up controls. He plans a meeting on Tuesday with Terrex and United Electric to generally see issues from these guys. Need to consider with "emergency generator" the size will now be much larger. *District was not concerned with having to get big generator to run pumps, they would have plenty of water in tank during long outage, plus not much water is used in an outage. Generator is not in project, we only provide a receptacle for generator use now. *it was also mentioned that the since the masonry work should be starting then to conceal conduit in the cores the electrical sub will need to have the new conduit sizes.*

12. Record drawings. *Idaho will review changes indicated by each crew foreman. Steve will transfer foremen's notes to master drawings. NCI needs to review in field. Ralph looked at Greg's set, hopefully engineer can read (understand) when doing his as-recorded set of plans. *Ralph got a chance to review Jim's plans this day. Steve said he would go back through both crews plans and try and make them more ledgible.*

13. Relocate hydrant at Fire Hall? Fire Chief has requested (demanded?) that the hydrant at the Fire Hall be relocated. Tom will consider if a compelling reason is given and if requested by District. This is ongoing, Ralph explained he had a conversation with Larry and told Larry a truck fill station was never in plans, and Larry said he would build his own piping to get his truck fill station. *Anything new from Larry?*Tom said we were probably done with this issue.*

14. Water tank foundation, excavation and stabile base. NCI had Boland go down 18" below the 6" depth

that Boland was anticipating to below the bottom of foundation wall, because of a clay lenses at the Boland's elevation. Boland would refill this area with gravel. The interior area of the tank was also excavated per the geotechnical report. *Scott said Barry had a letter to share on this issue*. No letter received. **Barry said it would be coming*.

15. The pipe line at Miner's lane sheet D-13, station 2+29 to 5+00 was designed with flat alignment and no air release. House 155 on Miners lane had previously requested a changed service location and wanted to tie into the main at 3+00 the greatest depth at the original ground. Options were discussed and District said they would rather deal with maintenance on air release then have a future problem with the house service buried 16'. Mark said we could add an air release manhole and keep the main at 6.5' depth. This adds the cost of an AR manhole. We are hoping Boland (Barry) gives a cost break in this area since they do not have to dig the main in at 16'. No cost break was offered to install main at the shallower depth. **Barry said he may still offer, just has not had time to provide.*

16. NCI did some reviewing with DEQ and tanks were supposedly removed at Miner's Bar. Kent called the installer of the new drain field on Miners and trenching should miss this also. **no construction problems in this alignment.*

NEW ISSUES

1. The fire line proposed at 13+62 (house 542) sht D-11 shows contractor removing and replacing shed. Can contractor get help from District to help coordinate this effort? **Tom asked if there was a potential to use directional drill to install the fire hydrant lines in these private properties, Boland would review*. Might be necessary to remove a tree in this yard also. We should review the efforts (see plan sheet notes) to install fire line at 19+17 (house 556), Schiellings, sht D-12

2. Review sht O-3 for three services to the Lucionnes, Gordon had said few weeks back that he wanted to separate water services so they came across to houses 70, 150 and 160 (Brad's house) on their own property. Again help with coordination. **Kent and Steve had already reviewed these services and were aware of what was to be done. NCI needs to be kept in this loop*.

3. House 170 on Dahn's Lane has told Steve where he wants his meter pit (this house has a well now). **already figured out location*

4. House 180 on Dahn's Lane not quite sure where pit needs to go, what side of lane would be best? **install pit on the far side (easterly) of his lane*

5. Any other house service we need to coordinate with? **There will be a lot of coordination in the alley off of East Hunter **Tom said Boland needs to meet DEQ requirements for Boland's proposed temporary water plan, Boland needs to review section 02660, para 3.2 in order to meet the DEQ requirements and their written plan be approved.*

6. We are trying to make sense of the existing water mains coming after they come down tank hill and at existing 4" and 6" pipes so we can layout new 8" tank line and pressure reducing station. **NCI gave Steve the surveyor's shots on the exploratory holes. Ralph showed Steve his first review and idea for modification. Steve would review*.

7. Plan B is weather takes a turn? Priority is to get new mains and services on line? **yes, getting water pipe installed in ground and ready for testing and using is a priority.*

8. **Kent mentioned Black Mountain (the meter billing programmers are really busy and Sand Coulee may*

not be able to get the new billing program up and running till early 2015, was this going to be problem with DEQ? Tom thought not.

SUBMITTAL ISSUES / STATUS

1. Mostly current, still waiting for pump size to final electrical power supply #9 and the control submittal #10.

CONTRACTOR PAYMENTS

1. Contractor to submit Application for Payment #2 for work completed through September 19th. This was done (Engineer reviewed and approved) and should be ready for processing.

STATUS OF ANY CHANGES (affecting contract price or time)

1. Generally more exploratory excavation hours and type 1 imported pipe bedding.
2. We added air release manhole at 3+00 Miners Lane sht D-13
3. We added trench plug at Gulch Lane sheet D-3
4. We added more CBC gravel at road into tank area to get a better profile.
5. We have deleted electrical and mechanical for well #3 sheet P-1
6. We will increase electrical service, equipment sizing and control for 480 Volt power in lieu of 240 Volt.
7. Added water service pit and connection at 17+00 sheet D-4
8. Added additional AC restoration along Dahn's Lane due to pipe relocation to avoid fiber sht D-5
9. Coating of service metals when service pit in ground water
10. added structural concrete to leave service pits in "traveled" ways
11. Went to LED lamps for Well house exterior.
12. Other changes and cost I am missing?
13. *Tom said they are adding Well #5 pump as a change order to this contract, Chris Boland will provide a cost to install new well pump to Barry for District. This new pump work follows the technical section in the specifications that was previously deleted.
14. *Tom said he would prefer to get several change order items at one time in lieu of numerous change orders as they come up.

NEXT SCHEDULED MEETING

Monday October 6, 2014 – 11:00 am

Sand Coulee
Water System Replacement
Boland Construction
Construction Progress Meeting No. 7 Minutes

DATE: October 6, 2014

ATTENDANCE:

Name:	Representing:	Name:	Representing:
Tom Henderson (not)	DEQ	Steve Carlson	EBC
Mary Ann Freeman	SCWS	Barry Boland	EBC
Pat Darko (not)	SCWSD	Scott Karaffa	EBC
Ralph McGillivray	NCI	Krista Hanson	NCI
Mark Rhodes (not)	Hydrometrics	Jake Neil	NCI
Kent Luoma (not)	District	Adam Jourdonnais	Hydrometrics

SCHEDULE:

Start Date: August 18, 2014
125 Calendar Days Contract Time
0 Calendar Days Contract Time Extensions which have been approved by Change Order
2 Weather Day was considered… (2nd day was 10-2-14) *need letter requesting from Barry
50 Contract Days, including today, have elapsed (no weather days in number)
75 Contract Days remaining
Scheduled End Date: December 20, 2014

WORK COMPLETED SINCE LAST PROGRESS MEETING ON: September 29, 2014

1. *@ tank: drain piping installed…..forms and rebar installed*
2. *@ well house…nothing*
3. *Installation of 8" water main …..main along Miner's Lane, and Fortune Lane sht D-6, and main along West Alley, sht D-11*
4. *meter pits being installed*

WORK SCHEDULED FOR UPCOMING WEEK

1. *Continue installation of 8" water main and appurtenances along West Alley and Fortune Lane.*
2. Pour tank foundation wall next Tuesday, and drain slab and rip rap
3. *Begin masonry work at well house (Cooper)*
4. *possibly do main line at toe of tank hill and Gulch Lane*

OLD ISSUES/RESOLUTION

1. Responsibility for locating curb stops and service line alignment, and coordination of efforts between Contractor and District. *Any new locations that need effort? *Steve said he and Kent were still reviewing locations of curb stops along alley*

2. Unit cost for concrete collars around meter pits installed in areas of vehicular travel? *Barry will provide cost. *Ralph will get Barry this detail information again.*

3. Unit cost for coating exposed metallic service line and meter pit components that will be and are installed in ground water. *Barry will provide a cost. We need to visit about…We would like to see all metals coated after install. Some items like curb box can be coated before install Ralph needs to see submittal on coating material, Ralph reviewed and for those metals already installed prep would be sand paper and wire brush. those metals not installed yet to sand blast to make a better coating.*

4. Verification of trench backfill compaction. Contractor and Engineer (on September 15th) collected four soil samples for moisture–density analysis with corresponding nuclear gage moisture density measurements at select locations where backfill has occurred. A comparison of this data against prior nuclear gage tests in similar soils will be made to judge adequacy of compaction. Proctor(s) for backfill materials was researched and there is a report by TDH given out last Friday 19th. Jake gave a comment on what Boland's TDH report offered, that with field densities with hydrocarbon material in them NCI was not getting correct moisture. Jake said he agreed with the TDH report and we were probably getting better compaction then what our densometer was reading. Apparently the densometer reads hydrogen as water and so increasing the moisture reading. And the fact the Boland crews were doing shallower lifts and making more effort. Jake wanted Boland to do one more in place proctor sample and density test in a spot that was we had not got as much compaction effort. Maybe somewhere along Gulch Lane. *Status? Barry said he wanted to get paid for the extra proctors and for TDH evaluation of situation, Ralph said for Barry to provide a letter to that effect.*

5. Last week we decided to put hydrants in along existing 6" water and not be concerned with freezing. This week do we need to order shorter barrel hydrants, because the existing main is not buried at 6.5' that the new hydrants are shipped as??? thought was to explore at the three new hydrants and get a vertical depth to order these hydrant barrels.

6. Installation of 25 HP pump in lieu of the specified 10 HP will require upsizing of electrical service, switchgear, wiring and conduits, and installation of VFD. NCI is working on this. NCI meet with Mike with Unitied Electric and also meet with control supplier (Terrex) to get there thoughts. **NCI needs the VFD unit data from Boland, Barry said he would get this*

7. Water tank foundation, excavation and stabile base. NCI had Boland go down 18" below the 6" depth that Boland was anticipating to below the bottom of foundation wall, because of a clay lenses at the Boland's elevation. Boland would refill this area with gravel. The interior area of the tank was also excavated per the geotechnical report. *Scott said Barry had a letter to share on this issue*. No letter received. Barry said it would be coming.

8. The fire line proposed at 13+62 (house 542) sht D-11 shows contractor removing and replacing shed. Can contractor get help from District to help coordinate this effort? Tom asked if there was a potential to use directional drill to install the fire hydrant lines in these private properties, Boland would review. **Steve said the directional drill would not be option at this time because the directional drill sub had already left the project*. Might be necessary to remove a tree in this yard also. We should review the

efforts (see plan sheet notes) to install fire line at 19+17 (house 556), Schiellings, sht D-12

9. Realignment of new water at existing water mains coming down tank hill and at existing 4" and 6" pipes. Ralph gave Steve tentative layout for new 8" tank line and pressure reducing station. Ralph reviewed this layout on Friday PM and it seemed OK. Only thing was we need to plug the existing water from the tank with a permanent plug not with the existing gate valve. **Steve said he would install a plug in lieu of using the old gate valve*. **Barry wanted a dwg on this revised alignment*

10. Boland needs to meet DEQ requirements for Boland's proposed temporary water plan, Boland needs to review section 02660, para 3.2 in order to meet the DEQ requirements and their written plan be approved. NCI received plan late Thursday, needs a sketch to go with the verbal, so this can be given to Rachel Clark, DEQ for her review also. Boland got us a sketch (plan) and this package was emailed to Tom. **Rachel Clark responded to the temporary water plan. One item of the response was to have either Jake stamp the temporary plan or NCI allow a different engineer propose the temp plan. Jake said he would need to review the required responses, especially where the engineer states no source of contaminated materials is present at the temp water area.*

NEW ISSUES

General discussion on amount of bid item 405, exploratory excavation, as of 9-19 we had 181 hours at $165/hour at a cost of $29,865, we had bid 15 hours or $2,475. Also bid item 116 temporary water, was bid at $40,000 lump sum. The general intent going into project was contractor would install temporary water and excavate through the existing pipe and not needing to "save" existing water system. Project is using extensive exploratory effort to locate and save existing water. **there was discussion, Boland said the way they approached project was to save the existing water line and the $40,000 cost for temporary water was to cover the alley location which was the only place they had intended to provide temporary water.*

Density testing. see last sheet of this agenda **there was discussion on this density testing approach, Boland would review. *Another point on this sheet was the fact under specifications section 02221, coal waste, ash and organic material would not be allowed for trench backfill. This lead to further discussion about Rachel Clark approval of plans and specifications with this text, and that, in reality these materials were allowed as trench backfill if imported type one pipe bedding would be used to isolate the pipe from coal or ash found in the trench excavation. *Mark had said that during the geotechnical study the local coal and ash samples taken were PCLP tested and these materials were not hazardous.*

**Barry asked if we had an engraving company we would recommend for sign on well house, Jake said he would look for such.*

District question came up about meter reading equipment….Ralph sent separate email out on this issue

SUBMITTAL ISSUES / STATUS

1. Mostly current, still waiting for pump size to final electrical power supply #9 and the control submittal #10.

CONTRACTOR PAYMENTS

1. not presently

STATUS OF ANY CHANGES (affecting contract price or time) Same as last week

1. Generally more exploratory excavation hours and type 1 imported pipe bedding.
2. We added air release manhole at 3+00 Miners Lane sht D-13
3. We added trench plug at Gulch Lane sheet D-3
4. We added more CBC gravel at road into tank area to get a better profile.
5. We have deleted electrical and mechanical for well #3 sheet P-1
6. We will increase electrical service, equipment sizing and control for 480 Volt power in lieu of 240 Volt.
7. Added water service pit and connection at 17+00 sheet D-4
8. Added additional AC restoration along Dahn's Lane due to pipe relocation to avoid fiber sht D-5
9. Coating of service metals when service pit in ground water
10. added structural concrete to leave service pits in "traveled" ways
11. Went to LED lamps for Well house exterior.
12. Other changes and cost I am missing?
13. Tom said they are adding Well #5 pump as a change order to this contract, Chris Boland will provide a cost to install new well pump to Barry for District. This new pump work follows the technical section in the specifications that was previously deleted.
14. Tom said he would prefer to get several change order items at one time in lieu of numerous change orders as they come up.

NEXT SCHEDULED MEETING

**Tuesday October 14, 2014 – 11:00 am (it is a holiday for DEQ and Hydrometrics on Monday the 13th.*

Sand Coulee
Water System Replacement
Boland Construction
Construction Progress Meeting No. 8 Minutes

DATE: October 14, 2014

ATTENDANCE:

Name:	Representing:	Name:	Representing:
Tom Henderson	DEQ	Steve Carlson	EBC
Mary Ann Freeman	SCWSD	Barry Boland	EBC
Idaho Trenberth	NCI	Krista Hanson	NCI
Mark Rhodes	Hydrometrics	Kent Luoma	SCWSD

SCHEDULE:

Start Date: August 18, 2014
125 Calendar Days Contract Time
0 Calendar Days Contract Time Extensions which have been approved by Change Order
2 Weather Day was considered… (2nd day was 10-2-14)
58 Contract Days, including today, have elapsed (no weather days in number)
67 Contract Days remaining
Scheduled End Date: December 20, 2014

WORK COMPLETED SINCE LAST PROGRESS MEETING ON: September 29, 2014

1. *@ tank: foundation/footings in place, backfill at foundation interior in progress.* ***Tank is scheduled to be on site the week of October 27th.***
2. *@ well house: masonry work (CMU) in progress*
3. *Distribution: completed installation of main line piping and appurtenances at Miners Lane, Fortune Lane, portion of Dahn's Lane north of Fortune and from toe of Tank Hill to Gulch Lane. Began installation of temporary water in alley.*
4. *?? meter pits installed.*

WORK SCHEDULED FOR UPCOMING WEEK

1. *Continue installation of 8" water main and appurtenances along Dahn's Lane, begin installation from tank to toe of Tank Hill, complete installation of temporary water in alley.*
2. *Complete backfill at tank foundation, install rebar.*
3. *Continue masonry work and start electrical work at well house and tank site.*
4. ***Continue installation of meter pits.***

5. ***Coordinate with Northwestern Energy for installation of power to well house/tank site.***

OLD ISSUES/RESOLUTION

1. ~~Responsibility for locating curb stops and service line alignment, and coordination of efforts between Contractor and District. *Most have been located*.~~

2. Unit cost for concrete collars around meter pits installed in areas of vehicular travel? *Per each cost $875 in contrast to Unit Bid Price for 6" concrete slab replacement of $90/SY (= $160 for 4" x 4" slab)?????* ****Barry will re-evaluate.***

3. Unit cost for coating exposed metallic service line and meter pit components that will be and are installed in ground water. *Barry will provide a cost. We need to visit about…We would like to see all metals coated after install. Some items like curb box can be coated before install Ralph needs to see submittal on coating material, Ralph reviewed and for those metals already installed prep would be sand paper and wire brush. those metals not installed yet to sand blast to make a better coating. No cost yet from Barry.* ****Cost will be provided to Ralph tomorrow (10/15)***

4. ~~Verification of trench backfill compaction. Contractor and Engineer (on September 15th) collected four soil samples for moisture–density analysis with corresponding nuclear gage moisture density measurements at select locations where backfill has occurred. A comparison of this data against prior nuclear gage tests in similar soils will be made to judge adequacy of compaction. Proctor(s) for backfill materials was researched and there is a report by TDH given out last Friday 19th. Jake gave a comment on what Boland's TDH report offered, that with field densities with hydrocarbon material in them NCI was not getting correct moisture. Jake said he agreed with the TDH report and we were probably getting better compaction then what our densometer was reading. Apparently the densometer reads hydrogen as water and so increasing the moisture reading. And the fact the Boland crews were doing shallower lifts and making more effort. Jake wanted Boland to do one more in place proctor sample and density test in a spot that was we had not got as much compaction effort. Maybe somewhere along Gulch Lane. *Status? Barry said he wanted to get paid for the extra proctors and for TDH evaluation of situation, Ralph said for Barry to provide a letter to that effect. Is test rolling plan working OK?*~~

5. Last week we decided to put hydrants in along existing 6" water and not be concerned with freezing. This week do we need to order shorter barrel hydrants, because the existing main is not buried at 6.5' that the new hydrants are shipped as??? thought was to explore at the three new hydrants and get a vertical depth to order these hydrant barrels.

6. Installation of 25 HP pump in lieu of the specified 10 HP will require upsizing of electrical service, switchgear, wiring and conduits, and installation of VFD. NCI is working on this. NCI meet with Mike with Unitied Electric and also meet with control supplier (Terrex) to get there thoughts. **NCI needs the VFD unit data from Boland, Barry said he would get this. Anything new from United Electric?* ****No change order pricing yet from United Electric. Terrex has change order pricing from Healy-Ruff for associated control work.***

7. ~~Water tank foundation, excavation and stabile base. NCI had Boland go down 18" below the 6" depth that Boland was anticipating to below the bottom of foundation wall, because of a clay lenses at the Boland's elevation. Boland would refill this area with gravel. The interior area of the tank was also excavated per the geotechnical report. *Scott said Barry had a letter to share on this issue*. No letter received. Barry said it would be coming.~~

8. ~~Realignment of new water at existing water mains coming down tank hill and at existing 4" and 6" pipes. Ralph gave Steve tentative layout for new 8" tank line and pressure reducing station. Ralph reviewed this layout on Friday PM and it seemed OK. Only thing was we need to plug the existing water from the tank with a permanent plug not with the existing gate valve. *Steve said he would install a plug in lieu of using the old gate valve. *Barry wanted a dwg on this revised alignment~~

9. Boland needs to meet DEQ requirements for Boland's proposed temporary water plan, Boland needs to review section 02660, para 3.2 in order to meet the DEQ requirements and their written plan be approved. NCI received plan late Thursday, needs a sketch to go with the verbal, so this can be given to Rachel Clark, DEQ for her review also. Boland got us a sketch (plan) and this package was emailed to Tom. *Rachel Clark responded to the temporary water plan. One item of the response was to have either Jake stamp the temporary plan or NCI allow a different engineer propose the temp plan. Jake said he would need to review the required responses, especially where the engineer states no source of contaminated materials is present at the temp water area. Stamped/signed copy of plan submitted to DEQ last week. ***NCI received approval from DEQ for temporary water distribution plan this morning. Result of bacteriologic testing expected soon. System can be used upon receipt of negative testing results.***

NEW ISSUES

Status of Forbes easement? ***Waiting to hear from Forbes. Kent will follow up this afternoon.***

Interior door at well house? **** Yes – in progress.***

Air test tank piping? ***Yes***

Landowner has requested asphalt milling in lieu of gravel at area between horse corrals and Miner's Lane. He had recently surfaced this area with millings.

SUBMITTAL ISSUES / STATUS

1. Awaiting revised submittals for changes made to electrical and controls requirements due to 25 Hp pumps.

CONTRACTOR PAYMENTS

1. Next pay request due 10/22.

STATUS OF ANY CHANGES (affecting contract price or time) Same as last week

1. Generally more exploratory excavation hours and type 1 imported pipe bedding.
2. We added air release manhole at 3+00 Miners Lane sht D-13
3. We added trench plug at Gulch Lane sheet D-3
4. We added more CBC gravel at road into tank area to get a better profile.
5. We have deleted electrical and mechanical for well #3 sheet P-1
6. We will increase electrical service, equipment sizing and control for 480 Volt power in lieu of 240 Volt.
7. Added water service pit and connection at 17+00 sheet D-4
8. Added additional AC restoration along Dahn's Lane due to pipe relocation to avoid fiber sht D-5
9. Coating of service metals when service pit in ground water
10. added structural concrete to leave service pits in "traveled" ways
11. Went to LED lamps for Well house exterior.

12. Other changes and cost I am missing?
13. Tom said they are adding Well #5 pump as a change order to this contract, Chris Boland will provide a cost to install new well pump to Barry for District. This new pump work follows the technical section in the specifications that was previously deleted.
14. Tom said he would prefer to get several change order items at one time in lieu of numerous change orders as they come up.

NEXT SCHEDULED MEETING

**Monday October 20, 2014 – 11:00 am*

Sand Coulee
Water System Replacement
Boland Construction
Construction Progress Meeting No. 9 Minutes

DATE: October 20, 2014

ATTENDANCE:

Name:	Representing:	Name:	Representing:
Tom Henderson	DEQ	Steve Carlson	EBC
Mary Ann Freeman	SCWSD	Barry Boland	EBC
Ralph McGillivray	NCI	Krista Hanson	NCI
Mark Rhodes	Hydrometrics	Autumn Coleman	DEQ

SCHEDULE:

Start Date: August 18, 2014
125 Calendar Days Contract Time
0 Calendar Days Contract Time Extensions which have been approved by Change Order
2 Weather Day was considered… (2nd day was 10-2-14)
64 Contract Days, including today, have elapsed (no weather days in number)
61 Contract Days remaining (HALF WAY)
Scheduled End Date: December 20, 2014

WORK COMPLETED SINCE LAST PROGRESS MEETING ON: October 14, 2014

1. @ tank: backfilling at interior and exterior. ***Tank is scheduled to be on site the week of October 27th.***
2. *@ well house: masonry work, CMU exterior complete still some interior, brick started and also electrical conduit runs*
3. *Distribution: completed installation of main line piping and appurtenances at Dahn's Lane and portion of alley. Temporary water in alley about complete, BT in and has good test results (need copy of test results)*
4. *Meter pits were installed.*
5. *Started to flush, chlorinate, and pressure test new water mains.*

WORK SCHEDULED FOR UPCOMING WEEK

1. *Distribution: Continue installation of 8" water main and appurtenances along alley, using temporary water in alley, begin installation of flow meter manhole at tank site and PRV manhole (Thursday 23rd). Installing the 2" water service for fire hall. Possibly starting the pipeline below tank on hill side, possibly using blasting (this effort for blasting needs to be reviewed by the specifications). Boland needs to find the existing line and tie to it with new service, will use the existing service to get into building.*

2. *Tank: Complete tank slab rebar and forming, install meter pit structure.*

3. *Well house building: Continue masonry work and electrical work at well house. possibly install roof trusses*
4. ***Continue installation of meter pits.***

OLD ISSUES/RESOLUTION

1. ~~Unit cost for concrete collars around meter pits installed in areas of vehicular travel? *Per each cost $875 in contrast to Unit Bid Price for 6" concrete slab replacement of $90/SY (= $160 for 4" x 4" slab)????? **Barry will re-evaluate.***~~

2. ~~Unit cost for coating exposed metallic service line and meter pit components that will be and are installed in ground water. *Barry will provide a cost. We need to visit about…We would like to see all metals coated after install. Some items like curb box can be coated before install. Ralph needs to see submittal on coating material, Ralph reviewed and for those metals already installed prep would be sand paper and wire brush. those metals not installed yet to sand blast to make a better coating. No cost yet from Barry. **Cost will be provided to Ralph tomorrow (10/15)***~~

3. ~~Last week we decided to put hydrants in along existing 6" water and not be concerned with freezing. This week do we need to order shorter barrel hydrants, because the existing main is not buried at 6.5' that the new hydrants are shipped as??? thought was to explore at the three new hydrants and get a vertical depth to order these hydrant barrels.~~ Exploratory took place late last week, completed FH at Mary Ann's driveway and now on middle FH location

4. Need results of bacteriologic testing on temporary water system. System can be used upon receipt of negative testing results. **NCI was emailed this PM, also forwarded to Rachel Clark.*

5. Status of Forbes easement? Kent visited with Forbes on Thursday. Kent said Forbes uncooperative on easement issue and we (project) were not to go on this property to make the hook up. **Tom said he would visit with Kent and then try and visit with Forbes.*

6. Still looking for air test results with new piping at tank. **Barry said this week*

NEW ISSUES

1. We need to see the 7 day break results for tank foundation pour. **Barry said the 7 day test passed at 5200 psi, will email NCI a copy*
2. Review of water meters for install in Rusty Ditch ground water. **And also coating to protect metals at same area. Need to give Barry an idea of the extent of protection so he can get meter installers working on this before it gets colder. Barry said he had already sand blasted and coated 12 curb stop boxes. The situation is how far we go with protection on the metals in the wet areas (Rusty Ditch ground water). Need cost. NCI would get wrench from Mike Andrey to look at ground water depth in pits already installed (4 each, probably have 8 more to do that are in ground water in this area).*
3. *Also visited about meter pits which will get the concrete collar. There are about 11 pits set up for concrete collars at this time and we are thinking all the pits in the alley off of East Hunter should get a concrete collar, but will need to get this approved. We want to install the new meter pits as close to property line (but in the alley way).
4. **NorthWestern will start on electrical service upgrade when Boland is ready.*

5. **Well pump #5 will be installed in this project (as a Change order)*

SUBMITTAL ISSUES / STATUS

1. Revised submittal #9 from United Electric for changes due to 480 volt equipment, was submitted to NCI.
   * NCI reviewed and sent email to Scott and Barry. Need to get cost agreed to.

CONTRACTOR PAYMENTS

1. Next pay request cut off day is 10/22, will need quantities soon thereafter.

STATUS OF ANY CHANGES (affecting contract price or time)

**see prior meeting minutes*

NEXT SCHEDULED MEETING

Monday October 27, 2014 – 11:00 am

Sand Coulee
Water System Replacement
Boland Construction
Construction Progress Meeting No. 10 Minutes

DATE: October 27, 2014

ATTENDANCE:

Name:	Representing:	Name:	Representing:
Tom Henderson	DEQ	Steve Carlson	EBC
Kent Luoma	SCWSD	Barry Boland	EBC
Ralph McGillivray	NCI	Krista Hanson	NCI
Autumn Coleman	DEQ	Scott Karaffa	EBC

SCHEDULE:

Start Date: August 18, 2014
125 Calendar Days Contract Time
0 Calendar Days Contract Time Extensions which have been approved by Change Order
2 Weather Day was considered… (2nd day was 10-2-14)
71 Contract Days, including today, have elapsed (no weather days in number)
54 Contract Days remaining
Scheduled End Date: December 20, 2014

WORK COMPLETED SINCE LAST PROGRESS MEETING ON: October 20, 2014

1. @ tank: forming and rebar for slab. ***Tank materials on site.***

2. *@ well house: masonry work complete and also electrical conduit runs, except interior wall*

3. *Distribution: completed installation of all main line piping and appurtenances except at tank hill. Temporary water in alley has been completed, but maybe done, set flow meter manhole and PRV manhole. installed 2" water service to fire hall…will visit about this work later and one new FH at Gulch Lane*

4. *Meter pits were installed.*

5. *Started to flush, chlorinate, and pressure test new water mains.*

WORK SCHEDULED FOR UPCOMING WEEK

1. *Distribution: Installation of the two remaining FH back to East Hunter, begin installation of mechanical installation in flow meter manhole at tank site and PRV manhole. Installing possibly starting the pipeline below tank on hill side, possibly using blasting (this effort for blasting needs to be reviewed by the specifications).*

2. *Tank: Complete tank slab rebar and forming, install flow meter mechanical, pour slab Thursday,*

Engineering America on site before pour?

3. *Well house building: Continue electrical work at well house. possibly install roof trusses*
4. ***Continue installation of meter pits west alley.***

OLD ISSUES/RESOLUTION

1. Exploratory took place late last week at Gulch lane, we will install the three FH's with project's 6.5' "barrel" height.

2. Status of Forbes easement? Kent visited with Forbes on Thursday. Kent said Forbes uncooperative on easement issue and we (project) were not to go on this property to make the hook up. Tom said he would visit with Kent and then try and visit with Forbes on Friday 24th. Status? **Mr Forbes was not appreciative of new water system, his water would go off if we do not tie him on, the District will hold his next water check and not cash it. Kent would look for the original easement the District has across his land.*

3. Still looking for air test results with new piping at tank. Status, all three pipes passed air test

4. We need to see the 7 day break results for tank foundation pour. Barry said the 7 day test passed at 5200 psi, still needs to email NCI a copy ** Scott will do this…*

5. Still reviewing water meters materials for install in Rusty Ditch ground water. And also coating to protect metals at same area. Barry said he had already sand blasted and coated 12 curb stop boxes. Still working on how far we go with protection on the metals in the wet areas (Rusty Ditch ground water). Need revised cost. Ground water depth in pits already installed (4 each about 3' from surface. We have 8 more to do that are in ground water in this area and 3 more on the other side of bridge. 15 total pits in ground water. ** Ralph showed sample of existing brass fitting that came from rusty ditch area, it looked pretty good shape. So it was decided not to add additional coating to new brass fittings in rusty ditch ground water area. We would only remove and replace the 4 curb stop valve boxes already installed and would install the sand blasted and recoated new curb stop valve boxes, also install these on the other 8 along Gulch Lane and other side of bridge, 3 more. So a total of 15 curb stop valve boxes would get sand blasted and recoated. Need a revised price. Also we had report from Badger Meter that the water quality sample results, sent to Meter Company, that the rusty ditch groundwater water would not bother the new bronze bodied meters we have for the project, so no alternative meters will be used in this rusty ditch ground water area*.

NEW ISSUES

1. Need to test tracer wire installation (specifications 02660 page 6) **Steve said the tracer wires do not work all that well to begin with.*

2. Visit about the 2"existing water service for fire hall (not a part of the project). **The meeting group did a field review of the situation. Maybe install the new 2" meter in a pit outside of building on new service line in lieu of trying to install the new meter inside of building.*

3. We have installed 2 each future saddle and corp, what about service pipe for these? (for Gordie and empty field east of town. * *the discussion also said it would be good to add length of service pipe and curb stop to these services as per spec detail, NCI will need to track lengths*. Also possibly at abandoned service east of Post Office??? **Kent would ask this individual about future service.*

We have a "future" saddle, corp service line and pit for Shartell not on original design.

4. Discuss coating buried brass in rusty ditch ground water and also revising meter box from brass body. see item #5 above.

5. *Discussion on coating mechanical inside the flow meter structure and inside the PRV structure, Ralph said normally these have to be sand blasted and recoated. Barry said can we reuse the coating on them now for primer? Ralph said show me it will match to our specification on coating. He said he gave an email to Scott on the coatings.

SUBMITTAL ISSUES / STATUS

1. Revised submittal #9 from United Electric for changes due to 480 volt equipment, was submitted to NCI. NCI reviewed and sent email to Scott and Barry. Need to get cost agreed to. **Barry said he needed to get Healy Ruff cost estimate also.*

CONTRACTOR PAYMENTS

1. Pay request cut off date was 10/21, NCI got quantities from Boland. Pay request processing is being done.

STATUS OF ANY CHANGES (affecting contract price or time)

**see also prior meetings minute*

1. We extended existing 6" main (20' or so) to west to have a spot to add a future main to if ever needed and to get new fire hydrant away from private property front.

NEXT SCHEDULED MEETING

Monday, November 3, 2014 – 11:00 am

Sand Coulee
Water System Replacement
Boland Construction
Construction Progress Meeting No. 11 Minutes

DATE: November 3, 2014

ATTENDANCE:

Name:	Representing:	Name:	Representing:
Tom Henderson	DEQ	Steve Carlson	EBC
Kent Luoma	SCWSD		
Ralph McGillivray	NCI	Krista Hanson	NCI
Pat Darko	SCWSD	Scott Karaffa	EBC

SCHEDULE:

Start Date: August 18, 2014
125 Calendar Days Contract Time
0 Calendar Days Contract Time Extensions which have been approved by Change Order
2 Weather Day was considered… (2nd day was 10-2-14)
78 Contract Days, including today, have elapsed (no weather days in number)
47 Contract Days remaining
Scheduled End Date: December 20, 2014

WORK COMPLETED SINCE LAST PROGRESS MEETING ON: October 27, 2014

1. @ tank: poured tank slab, working on meter manhole and overflow manhole.
2. @ well house: grading, trusses on site, but not being installed
3. Distribution: new FHs at Gulch Lane and at east alley out to East Hunter
4. Meter pits were installed at east alley
5. Continued to flush, chlorinate, and pressure test new water mains.
6. **Boland replaced the existing spring drain from toe of hill that runs to Rusty Ditch*

WORK SCHEDULED FOR UPCOMING WEEK

1. Distribution: Installing possibly starting the pipeline below tank on hill side, possibly using blasting (this effort for blasting needs to be reviewed by the specifications). ** may not need blasting, tank line would go in from bottom of hill up to top of hill*
2. Tank: install flow meter mechanical **and PRV manhole mechanical*, start erecting tank walls **tank walls maybe start next week, Tri-county mechanical would be do the structure install*

3. Well house building: finish site grading and installing roof trusses **by Detailed Construction, and electrical by United*

4. Continue installation of meter pits west alley**.** *******and at other town locations, 14 or so pits left to install as of today*

OLD ISSUES/RESOLUTION

1. Status of Forbes easement? Kent would look for the original easement the District has across his land. **Kent found easement and get copy to Tom, Autumn would probably call Forbes after reviewing the original easement*
2. Check tracer wires
3. Maybe install the new 2" meter in a pit outside of building on new service line in lieu of trying to install the new meter inside of building. *The new 2" meter will go inside of building, and all fire hall water use will go through meter. No exterior pit will be installed. Tom said DEQ will not help fund water service repair inside of Fire hall. Larry Butler is Fire Hall manager 899-5661 was at meeting. Fire Hall would need to accomplish their piping repair on their own, not with project funds.*
4. Kent would ask the individual about future service at east of Post Office, status? **Yes this lot will get future water service, they are installing today*
5. Need to see more data on coating of DIP in structure from Barry, **Scott said they are working on*
6. Review data found at west end of Gulch Lane for house services (#27,#31 and #35)…**#31 got a pit, #35 were still looking for curb stop. The existing water piping in this area took considerable effort to get data on what lines were for what house.*

NEW ISSUES

1. Height of pressure reducing valve structure…add 3'-6" barrel? **Tom said OK on this, wanted to pass this by property owners Myers also.*
2. Get a revised schedule/work scope/weather/next spring work? 47 days remain on contract time **generally trying to look ahead on schedule. Ralph said we go to winter shut down we would want to completely shut down, we would not work a day and down for two and work a day, because we could not schedule our manpower to how Boland would pick (good weather days to work). The schedule also helps the District coordinate their efforts and community.*

*3. *Tom needs the VFD data for the new pump for well #5.*

*4. *Kent said he did not want to have to use old well #4 because of solids getting into new distribution.*

*5. *Larry Butler asked if project could move the fire hydrant at the fire hall closer to pavement and face of building to help them load trucks and not have these truck leave tracks going to present location. Distance approved to move hydrant is 35' this move should be paid as fire line (6" pipe) bid item. We need to have Larry mark the spot on the ground. Fire hall is also going to install a truck loading facility (not part of the project).*

6. any fire hydrant use will only be monitored "indirectly" at main flow meter at the tank site for amount water difference of what is going to tank and what individual meters at the houses show for flow.

SUBMITTAL ISSUES / STATUS

1. Healy Ruff submittal for controls came in for a final review….

CONTRACTOR PAYMENTS

1. Pay request #3 with cutoff date of October 21 was sent to Tom.

STATUS OF ANY CHANGES (affecting contract price or time)

see also prior meetings minute

1.

NEXT SCHEDULED MEETING

Monday, November 10, 2014 – 11:00 am

Sand Coulee
Water System Replacement
Boland Construction
Construction Progress Meeting No. 12 Agenda

DATE: November 10, 2014

NOTE NO MEETING HELD THIS DATE DUE TO SNOW

ATTENDANCE:

Name:	Representing:	Name:	Representing:
Tom Henderson	DEQ	Steve Carlson	EBC
Kent Luoma	SCWSD		
Ralph McGillivray	NCI	Krista Hanson	NCI
Pat Darko	SCWSD	Scott Karaffa	EBC

SCHEDULE:

Start Date: August 18, 2014
125 Calendar Days Contract Time
0 Calendar Days Contract Time Extensions which have been approved by Change Order
2 Weather Day was considered… (2nd day was 10-2-14)
85 Contract Days, including today, have elapsed (no weather days in number)
40 Contract Days remaining
Scheduled End Date: December 20, 2014

WORK COMPLETED SINCE LAST PROGRESS MEETING ON: November 3, 2014

1. @ tank: working on meter manhole and PRV manhole.

2. @ well house: grading, trusses, sheathing, electrical installed (conductors in conduits)

3. Distribution: service lines being installed and connected to new mains

4. Meter pits were installed at east alley and other locations

5. Continued to flush, chlorinate, and pressure test new water mains. Note all distribution pipe currently installed has been pressure tested and passed along with Bac T tests.

6. All the redo of curb stop boxes were installed (Boland)

WORK SCHEDULED FOR UPCOMING WEEK

1. Distribution: Installing possibly starting the pipeline below tank on hill side

2. Tank: continue installing flow meter mechanical and PRV manhole mechanical, start erecting tank walls

3. Well house building: finish site grading and electrical and metal finish

4. 4 meter pits remaining, 3 on Gulch Lane at #35, #37 and #73 in existing concrete slab and the 4th ???

OLD ISSUES/RESOLUTION

1. Fire hall 2" piping and meter status? Boland gave a price to get water into building and tie to meter.
2. Need to see more data on coating of DIP in structure from Barry, Scott said they are working on
3. Review data found at west end of Gulch Lane for #35 house service
4. Get a revised schedule/work scope/weather/next spring work? 40 days remain on contract time… Barry we need to see how you plan to do this… we do not want to stop and go, we want to grant a complete weather shut down and then a start up again next spring…District wants this same approach…if you use up days now then extra time in spring to finish those items may become short, and extra contract days in the spring will not be acquired easily.
5. Fire hall fire hydrant relocation coordinated with Larry Butler?
6. Tom is still trying to get paperwork for the well pump #5 replacement completed with Boland

NEW ISSUES

Need to start to final some of the lingering items…cost and workscope for:

1. painting and reinstallation of curb stop boxes in rusty ditch water
2. painting piping in structures
3. finish with concrete apron at the current gravel surfacing at some pits….Mike Andre said he did 8 pits with gravel in alley and 10 additional pits with gravel in other locations around town. 18 total pits that will get concrete aprons eventually.
4. interior door at well house
5. and more….

1. Has roof framing and metal installation been coordinated?

SUBMITTAL ISSUES / STATUS

1. Healy Ruff submittal for controls came in for a final review, as is United Electric for 480 volt equipment, need cost from Boland for the change from 240 volt to 480 and also for deletion of well pump #3 work.
2. Painting submittal needs work
3. Need imported topsoil, sod, grass seed and fertilizer submittal…also the AC

CONTRACTOR PAYMENTS

STATUS OF ANY CHANGES (affecting contract price or time)

**see also prior meetings minute*

1.

NEXT SCHEDULED MEETING

Monday, November 17, 2014 – 11:00 am

Sand Coulee
Water System Replacement
Boland Construction
Construction Progress Meeting No. 13 Minutes
** Comments made during meeting*

DATE: November 18, 2014

NOTE NO MEETING HELD ON NOVEMBER 10th DUE TO SNOW

ATTENDANCE:

Name:	Representing:	Name:	Representing:
Tom Henderson	DEQ	Steve Carlson	EBC
Kent Luoma	SCWSD	Mary Ann Freemen	SCWSD
Ralph McGillivray	NCI	Krista Hanson	NCI
Jake Neil	NCI	Scott Karaffa	EBC
Adam Jourdonnais	Hydrometrics		

SCHEDULE:

Start Date: August 18, 2014
125 Calendar Days Contract Time
0 Calendar Days Contract Time Extensions which have been approved by Change Order
2 **Weather Day was considered… (2nd day was 10-2-14) November 8-11 weather, 4 days, started work again 19th for tank guys.** ****Barry would need to request for weather days formally***
93 Contract Days, including today, have elapsed (there is no weather days in this number)
32 Contract Days remaining
Scheduled End Date: December 20, 2014 (again no weather days)

WORK COMPLETED SINCE LAST PROGRESS MEETING:

1. @ tank (Engineering America) started November 19th
2. no other work progressing since November 7th.

WORK SCHEDULED FOR UPCOMING WEEK

1. Distribution: Installing possibly starting the pipeline below tank on hill side (next spring?)

2. Tank: continue installing flow meter mechanical and PRV manhole mechanical (*Tri-County Mechanical), finish erecting tank walls

   Tank work hopefully completed by **Thursday 20th…. Tank guys will chlorinate tank*

3. Well house building: finish site grading and electrical and metal finish

4. 4 meter pits remaining, 3 on Gulch Lane at #35, #37 and #73 in existing concrete slab and the 4th in alley ??? **This one in alley is an additional pit, at shop across from alley from Schiellings..sht*

OLD ISSUES/RESOLUTION

1. Fire hall 2" piping and meter status? Boland gave a price to get water into building and tie to meter. Ralph then asked if this cost included all work. **Barry said the 5 hours is lump sum, and that Bary would let us know what he had in the cost to install meter and this would be a deduct*. Fire hall fire hydrant relocation outside been coordinated with Larry Butler? **Steve would coordinate with Larry and have Larry paint the spot on pavement where he wants the fire hydrant. this is low priority.*
2. Need to see more data on coating of DIP in structure from Barry, Scott said they are working on, Ralph also has a call into Tnemec on these coatings…
3. Review data found at west end of Gulch Lane for #35 house service *nothing
4. Get a revised schedule/work scope/weather/next spring work? include days remaining on contract time…

   Barry we need to see how you plan to do this… we do not want to stop and go, we want to grant a complete weather shut down and then a start up again next spring…District wants this same approach…if you use up days now then extra time in spring to finish those items may become short, and extra contract days in the spring will not be acquired easily. Barry said winter shut down December 5th. Work schedule during Thanksgiving? **Barry said it weather report is showing warm weather he would like to still continue the project. Boland's goal at this point is to tie service onto new mains so District does not need to rely on old distribution system.*
5. Tom is still trying to get paperwork for the well pump #5 replacement completed with Boland **word was this has happened*.

Need to start to final some of the lingering items…cost and workscope for:

6. painting and reinstallation of curb stop boxes in rusty ditch water
7. finish the concrete apron at the current gravel surfacing at speical pits….Mike Andre said he did 8 pits with gravel in alley and 10 additional pits with gravel in other locations around town. 18 total pits that will get concrete aprons eventually.
8. interior door at well house
9. Has roof framing and metal installation been coordinated? **Barry said the sheet metal guys wanted extra $300 to make the vent out of the prefinished metal materials used on the rest of the roof.*

NEW ISSUES

**Kent asked about Northwestern Energy schedule, Boland said NWE had been out and hopefully would start putting in the new electrical service.*
**Barry said they would not work the Friday after Thanksgiving*
**Tank access road (Jim Rodgers) would be further discussed (for improvements) after tank hill work is completed next spring.*
**the "spring/groundwater" condition near MaryAnn's house was looked at after meeting*
**several of the residence that revised water services have actually revised plumbing to be able to get on new system*
**At some time the new fire hydrants along East Hunter should have the hydrant rotated 180 degree to face into East Hunter.*

SUBMITTAL ISSUES / STATUS

1. Healy Ruff submittal for controls came in for a final review, as is United Electric for 480 volt equipment, have a cost from Boland for the change from 240 volt to 480 and also for deletion of well pump #3 work. looking for a break down on this work.

2. Painting submittal needs work
3. Need imported topsoil, sod, grass seed and fertilizer submittal…also the AC **AC all ready submitted*

CONTRACTOR PAYMENTS

at end of this week (21st)

STATUS OF ANY CHANGES (affecting contract price or time)

**see also prior meetings minute*

1.

NEXT SCHEDULED MEETING

Monday, November 24, 2014 – 11:00 am ????? ****would not have meeting next Monday 24th, but possibly have next meeting on December 1st…..***

Sand Coulee
Water System Replacement
Boland Construction
Construction Progress Meeting No. 14 Agenda
** Comments made during meeting*

DATE: December 1, 2014

NOTE NO MEETING HELD ON THIS DATE DUE TO WEATHER and Boland not working

ATTENDANCE:

Name:	Representing:	Name:	Representing:
Tom Henderson	DEQ	Steve Carlson	EBC
Kent Luoma	SCWSD	Mary Ann Freemen	SCWSD
Ralph McGillivray	NCI	Krista Hanson	NCI
Jake Neil	NCI	Scott Karaffa	EBC
Adam Jourdonnais	Hydrometrics		

SCHEDULE:

Start Date: August 18, 2014
125 Calendar Days Contract Time
0 Calendar Days Contract Time Extensions which have been approved by Change Order
6 Weather Day was considered… (2nd day was 10-2-14) November 8-11 weather, 4 days, started work again 19th for tank guys. ***Barry would need to request for weather days formally***
106 Contract Days, including today, have elapsed (there is no weather days in this number)
19 Contract Days remaining
Scheduled End Date: December 20, 2014 (again no weather days)

WORK COMPLETED SINCE LAST PROGRESS MEETING (November 18th) :

1. @ tank (Engineering America) completed November 19th
2. Piping in both structures (Tri-County) completed,
3. metal (facia, soffit, and roof panel) at well house are done, gutters and downspouts not done
4. Fire hall water (meter) completed, fire hall has water
5. Water services on the East side of town (25 homes) on new water main
6. PRV manhole barrel extension added, still working on sealing sump from ground water

WORK SCHEDULED FOR UPCOMING TIME

1. Distribution: Installing possibly starting the pipeline below tank on hill side (next spring?)
2. Well house building, gutters, sheetrock, insulation, FRP ceiling panel and electrical:
3. 5 meter pits remaining, 3 on Gulch Lane at #35, #37 and #73 in existing concrete slab and the 4th in alley. This one in alley is an additional pit, at shop across from alley from Schiellings..sht D-12, and 5th is at #540 and #542 which both services were feed from one service connection before and now need to be separated.

4. Piping at top of hill, need pipe boot and thrust collars on piping at meter manhole, need surge relief and sump discharge piping, piping from wells (#4,#5 and #6) to meter manhole. Need electrical and transducer into structures.

OLD ISSUES/RESOLUTION

1. Fire hall 2" piping and meter status? Boland gave a price to get water into building and tie to meter. Ralph then asked if this cost included all work. Barry said the 5 hours is lump sum, and that Barry would relocation let us know what he had in the cost to install meter and this would be a deduct. Fire hall fire hydrant outside been coordinated with Larry Butler? Steve would coordinate with Larry and have Larry paint the spot on pavement where he wants the fire hydrant. this is low priority.

2. NCI received more data on coating of DIP in structure from Tnemec, Ralph emailed data to Scott from Tnemec on these coatings…

3. Still need to review service location at west end of Gulch Lane for #35 house service

4. Tom is still trying to get paperwork for the well pump #5 replacement completed with Boland

5. Kent asked about Northwestern Energy schedule, Boland said NWE had been out and hopefully would start putting in the new electrical service.

6. Barry said they would not work the Friday after Thanksgiving

7. Tank access road (Jim Rodgers) would be further discussed (for improvements) after tank hill work is completed next spring.

8. The "spring/groundwater" condition near MaryAnn's house was looked at after last meeting, any further action?

9. At some time the new fire hydrants along East Hunter should have the hydrant rotated 180 degree to face into East Hunter

Need to start to final some of the lingering items…cost and workscope for:

10. painting and reinstallation of new curb stop boxes in rusty ditch water

11. finish the concrete apron at the current gravel surfacing at special pit locations….Mike Andre said he did 8 pits with gravel in alley and 10 additional pits with gravel in other locations around town. 18 total pits that will get concrete aprons eventually.

12. interior door at well house (Scott quote of $1345 by email 10-9)

NEW ISSUES

1. Myer's did not like location of new fire hydrant near their house?? thoughts
2. Sump sealing at PRV structure due to high ground water…this effort is an extra to project

SUBMITTAL ISSUES / STATUS

1. Painting submittal needs work
2. Need imported topsoil, sod, grass seed and fertilizer submittal…

CONTRACTOR PAYMENTS

work cut off was at end of week (November 21st)

STATUS OF ANY CHANGES (affecting contract price or time)

**see also prior meetings minute*

NEXT SCHEDULED MEETING

Sand Coulee
Water System Replacement
Boland Construction
Construction Progress Meeting No. 15 Minutes
** Comments made during meeting*

DATE: April 7, 2015

NOTE: Boland last worked on November 25th, and after winter shutdown, work started again April 6, 2015

ATTENDANCE:

Name:	Representing:	Name:	Representing:
Tom Henderson	DEQ	Steve Carlson	EBC
Kent Luoma	SCWSD	Barry Boland	EBC
Ralph McGillivray	NCI	Krista Hanson	NCI
Mark Rhodes	Hydrometrics	Scott Karaffa	EBC

SCHEDULE:

Start Date: August 18, 2014
125 Calendar Days Contract Time
0 Calendar Days Contract Time Extensions which have been approved by Change Order
6 Weather Day considered… (8-22-14, 10-2-14) November 8-11, 4 weather days, started work again November +12th for tank guys, stopped work on November 25
100 Contract Days, including today, have elapsed to 11-25 (no weather days added yet)
25 Contract Days remaining (will increase with weather days)
Scheduled End Date: April/May (again no weather days)

WORK COMPLETED SINCE LAST PROGRESS MEETING:

1. @ tank (Engineering America) completed November 19th, piping in both structures (Tri-County) completed, metal (fascia, soffit, and roof panel) at well house are done, gutters and downspouts are done**,** fire hall water (meter) completed, fire hall has water**,** water services on the East side of town (25 homes) on new water main**,** PRV manhole barrel extension added, still working on sealing sump from ground water, Krista said about 3" of water in bottom of main structure.

WORK SCHEDULED FOR UPCOMING TIME

1. Distribution: starting the pipeline below tank on hill side **starting at bottom of hill and working up hill*
2. Well house building, insulation should be done? FRP ceiling panel and **partial on electrical*
3. 5 meter pits remaining, 3 on Gulch Lane at #35, #37 and #73 in existing concrete slab and the 4th in alley. This one in alley is an additional pit, at shop across from alley from Schiellings..sht D-12, and 5th is at #540 and #542 which both services were feed from one service connection before and now need to be separated. **125 Dahn's lane has meter pit in alley, but Steve not sure where existing water service piping is to connect to*.

4. Piping at top of hill (cross connecting pipe), need pipe boot and thrust collars on piping at meter manhole, need surge relief and sump discharge piping, piping from wells (#4, #5 and #6) to meter manhole. Need electrical and transducer into structures.
5. ****We need to get a up to date "spring" work schedule from Boland***

OLD ISSUES/RESOLUTION

1. Fire hall 2" piping and meter status installed. Boland gave a price to get water into building and tie to meter. Ralph then asked if this cost included all work. Barry said the 5 hours is lump sum for the water service at building relocation, and that Barry would relocation let us know what he had in the cost to install meter and this would be a deduct. Fire hall fire hydrant outside been coordinated with Larry Butler? Steve would coordinate with Larry and have Larry paint the spot on pavement where he wants the fire hydrant. This is low priority.
2. NCI received more data on coating of DIP in structure from Tnemec, Ralph emailed data to Scott from Tnemec on these coatings…
3. Still need to review service location at west end of Gulch Lane for #35 house service
4. Tom is still trying to get paperwork for the well pump #5 replacement completed with Boland **Tom said this will start as work directive and roll into a change order. May also also have Chris abandon the older existing wells at the same time as when drilling new well #6*
6. Tank access road (Jim Rodgers) would be further discussed (for improvements) after tank hill work is completed next spring. Tank access agreement (District's attorney) **Kent said the District's attorney had a letter drafted a letter, but was not given to Rodgers* yet
7. The "spring/groundwater" condition near MaryAnn's house was looked at after last meeting, any further action? **cold issue, no one knows the outcome*
8. At some time the new fire hydrants along East Hunter should have the hydrant rotated 180 degree to face into East Hunter
9. coating brick at well house
10. Fiber optics into well house? **no work done yet, may need to revise this area for drainage*
11. Northwestern electrical service into well house? Building is hot, just needs meter installed, need to let NW (Joel Demko know at 4547113)..
12. modify drainage on the "hoot" side of building to allow storm water to flow out

Need to start to final some of the lingering items…cost and work scope for:

13. painting and reinstallation of new curb stop boxes in rusty ditch water
14. install the concrete apron at the current gravel surfacing areas at special pit locations….Mike Andre said he did 8 pits with gravel in alley and 10 additional pits with gravel in other locations around town. 18 total pits that will get concrete aprons eventually….
15. interior door at well house (Scott quote of $1345 by email 10-9)
16. Myer's did not like location of new fire hydrant near their house?? thoughts FH is not in their property…**Kent said this is solved and Myer's are OK with FH.*
17. Sump sealing at PRV structure due to high ground water…this effort is an extra to project**Steve said they could continue to try to plug*
18. and numerous others **Tom said Boland and NCI needs to work on these items*
19. ***need to install label on tank with the work WATER, to be below the SAND COULEE*
20. ***need chairs for rebar at well house sidewalk, also need to have concrete testing done, provide control joints at 5' on center*

NEW ISSUES

1. Forbes property **Tom said do not do any work in this area till things are straightened out, wait as long as possible before doing anything with water service to this house*

2. Water service to house #27 west of gulch lane (plan sheet O-1)…**Kent said this house #27 and House #31 were both tapped off a 1.5" poly line. Kent was hoping we could leave the 1.5" line as is and just add a new meter/and pit to make a connection to house #27. House #27 was not planned for a new water service connection, but Owner wants to have new service connect. Tom was acceptable to new meter/and pit, but was curious if the 1.5" water pipe was acceptable to DEQ. Ralph said he would ask Jake and get back to Tom.*

SUBMITTAL ISSUES / STATUS

1. Painting submittal needs work
2. Need imported topsoil, sod, grass seed and fertilizer submittal…

CONTRACTOR PAYMENTS

last pay request processed was #5, work from (October 22 to November 21st)

STATUS OF ANY CHANGES (affecting contract price or time)

**see also prior meetings minutes*

NEXT SCHEDULED MEETING

****Let us try to go for two weeks which would be April 21 at 11:00 AM, unless a meeting is needed sooner***

Sand Coulee
Water System Replacement
Boland Construction
Construction Progress Meeting No. 16 Minutes
* *Comments made during meeting*
** *Comment after meeting*

DATE: April 23, 2015

ATTENDANCE:

Name:	Representing:	Name:	Representing:
Tom Henderson	DEQ	Steve Carlson	EBC
Kent Luoma	SCWSD	Barry Boland	EBC
Ralph McGillivray	NCI	Krista Hanson	NCI
Pat Darko	SCWSD	Scott Karaffa	EBC
Jake Neil	NCI	Mary Ann Freeman	SCWSD

SCHEDULE:

Start Date: August 18, 2014
125 Calendar Days Contract Time
0 Calendar Days Contract Time Extensions which have been approved by Change Order **need to visit about*
6 Weather Day "tentative"… (8-22-14, 10-2-14, 10-10-14 and 10-11-14), started work again November 12th for tank guys, stopped work due to winter on November 25
96 Contract Calendar Days have elapsed at the end of season 11-25 (giving Boland 4 weather days will be added after the original 125 calendar days, April 30. I will add 4 working days after that)
31 Contract calendar Days remaining starting April 6th…. (I gave a weekend "127 days")
Scheduled End Date: May 6th
13 Calendar Days remain after today **Barry said he wants to visit*

WORK COMPLETED SINCE LAST PROGRESS MEETING:

1. Poured sidewalk at well house
2. Installed water main up tank hill, installed cross piping, installed some well lines
3. Installed electrical at well house
4. installed water services and connections. **Steve said they have 9 or 10 services left to tie in. *House #27 gulch lane can be connected*
5. piping from wells (#4 temporary, #5 and #6) to new tank feed line.

WORK SCHEDULED FOR UPCOMING TIME

1. Well house building, insulation should be done? **yes* FRP ceiling panel and partial on electrical
2. Need surge relief and sump discharge piping. * *Steve asked if these lines would freeze because they are shallow, Jake said NCI would take another look.* Need electrical and transducer into wells and structures.
3. ***We need to get a up to date "spring" work schedule from Boland***

OLD ISSUES/RESOLUTION

1. Fire hall fire hydrant outside been coordinated with Larry Butler? **Larry marked location of FH with a traffic candle*. Steve would coordinate with Larry and have Larry paint the spot on pavement where he wants the fire hydrant. This is low priority.

2. Still need to review service location at west end of Gulch Lane for #35 house service **at house #35 Gulch Lane the people have torn up their back yard and the stone retaining wall so now may be a good time to find their water service line*

3. Tom is still trying to get paperwork for the well pump #5 replacement completed with Boland. Tom said this will start as a work directive and roll into a change order. May also also have Chris abandon the older existing wells at the same time as when drilling new well #6 **Tom said he would call and visit with Barry tomorrow before 10. Barry said he did not cover cost of the VFD with WD #2. Barry gave copies of materials to Tom and Jake at the meeting for WD#2. Tom said to verify the pump code number 12 or 13???*

***Ralph called Mike with United Electric after today's meeting and Mike said he did not have the actual (2) VFDs in WD #1, but he had labor to hang VFD/install them, he also had the conduits and conductors for new runs to wells #5 and #6, Mike also said the reason he did not run conductors in his conduit for well #6 was Boland's guys said they did not want this stuff installed till after well drilling took place. I said I thought what we came up with at today's meeting was the new larger sized well #5 conductors could be run out to disconnect at the well #5 and these conductors could use these to run the existing pump, and also that Barry can tell Mike about running conductors to be sure.*

4. The "spring/groundwater" condition near MaryAnn's house was looked at after last meeting, any further action? cold issue, no one knows the outcome…**Mary Ann said the water was still flowing, Jake said possibly cut off trench…Tom said we would visit about when the main water project is built, this situation is not part of the Boland contract.*
5. cleaning and coating brick at well house **Scott said he let Cooper, the masonry guys, know again*
6. Fiber optics into well house? Kent, has the District (and Boland) coordinated with 3-Rivers? ** Kent said taken care of*
7. modify drainage on the "hoot" side of building to allow storm water to flow out
8. need to install label on tank with the work WATER, to be below the SAND COULEE
9. Forbes property anything new? Thad said he is waiting for direction from Court. We still need to leave Forbes on existing line….time will tell on this issue
10. Water service to house #27 west of gulch lane, OK to add meter pit and tie in their service line
11. Need to review tank over flow drain into structure **we do not know if current piping from tank overflow will go into drain without flooding at ground surface. NCI take a better look at this*
12. United Electric will stub out conduit for future well 6, will install post and disconnect after well #6 is drilled. will install post and disconnect for existing well #5 but will not pull conductors till new pump is installed **read Ralph's paragraph in item 3 above*.

Need to start to final some of the lingering items…cost and work scope for items such as: * *Barry said next week*

13. painting and reinstallation of new curb stop boxes in rusty ditch water
14. install the concrete apron at the current gravel surfacing areas at special pit locations
15. Sump sealing at PRV structure due to high ground water…this effort is an extra to project, Steve said they could continue to try to plug
16. and numerous others, Boland and NCI needs to work on these items

NEW ISSUES

1. Density test on hill slope did not pass. **Barry said he visited with TDH and has some ideas and we would visit*. Also need compactive effort with electrical trenches near well house
2. Number of days is short, need to wrap things up….* *Barry said he would work up a memo to address his request for (25 working day) extension of time.*
3. Mixer installation…better to come through vent at center of tank then hatch/ (United Electric) elect code relative to disconnect location? disconnect is lockable so this is acceptable by code to be installed at ground level
4. need storm water protection for tank hill side (incorporates BMP) **Barry said we could visit*
5. AC and gravel restoration….Sod on lawn areas, 10' max payable..topsoil is imported and 6" depth…AC is nominally 5' to each side of pipe location and AC is 3" thick hot mix over 10" thick of base course gravel…gravel surfacing is 6" depth with 8' width payable for trench…possibly less thickness and wider area? dryland seed (spec 02930) removing 2" and larger stones and tilling 4" depth **we will try to come up with a plan to use pulverized asphalt to cover a wider width on the asphaltic streets, in lieu of only replacing with hot mix in a narrower width. Barry was to get us a cost for pulverized surface. It was suggested to get a pulverized material with more AC and less concrete material.*
6. need Steve's daily reports **Steve he gave a few and was working on them*
7. install water sampling stations (2 each) discuss location with Kent and Pat **Kent and Pat said they did not need these stations and would continue to test out of people's houses*. *Delete from project work scope*.
8. add check valve for well line to well #4, same situation as existing
9. Frostless hydrant at existing well #5, is there one? **no, has a flushing hydrant but not a frostless hydrant* does it have threaded end? we had specified a frostless hydrant for #5 **Ralph would contact Rachel Clark about whether to remove the threaded nozzle or place a cap on the threads when done with sampling*
10. exploratory efforts needs to be requested and approved prior to work being done to be payable….**Steve said we out this effort would need to work*

**During the meeting, Kent said, we would need to fill tank twice, Fill, chlorinate and flush first tank and fill again and sample. Kent said we would need to coordinate town water and water to fill new tank, also this will take quite a while because of the 35gpm rate of original well pump #5.*

**Barry said mixer representative not available to provide support for operation till June some time, it was decided to install mixer in tank now and disinfect same time as tank interior.*

**It was asked if new telemetry can operate existing pumps…Jake thought so*

**Tom was asked when he anticipated well #6 would be drilled and he said late fall.*

SUBMITTAL ISSUES / STATUS

1. Painting submittal needs work…work on, should be done, need to get digital copy
2. Just got sod, grass seed and fertilizer submittal…need top soil

CONTRACTOR PAYMENTS

last pay request processed was #5, work from (October 22 to November 21st) new cut off day? **New cut off day will be the 28th*

STATUS OF ANY CHANGES (affecting contract price or time)

see also prior meetings minutes

NEXT SCHEDULED MEETING

Let us try to go for two weeks which would be ****Thursday May 7* at 11:00 AM, unless a meeting is needed sooner**

Sand Coulee
Water System Replacement
Boland Construction
Construction Progress Meeting No. 17 Minutes
** Comments made during meeting*

DATE: May 12, 2015

ATTENDANCE:

Name:	Representing:	Name:	Representing:
Tom Henderson	DEQ	Steve Carlson	EBC
Kent Luoma	SCWSD	Barry Boland	EBC
Ralph McGillivray	NCI	Krista Hanson	NCI
Autumn Coleman	DEQ	Scott Karaffa	EBC
Mark Rhodes	Hydrometrics	Mary Ann Freeman	SCWSD

SCHEDULE:

Start Date: August 18, 2014
125 Calendar Days Contract Time, originally
45 +6 Calendar Days Contract Time Extensions which have been approved by WD #2
4 +2 Weather Days… (8-22-14, 10-2-14, 10-10-14 and 10-11-14) 4 Work and 2 Calendar days.
Contract End Date with weather days and winter shut down was May 6, add WD #2, 45 calendar days starting May 7 goes through June 11. June 11 is new contract end date.
30 Calendar Days remain after today

WORK COMPLETED SINCE LAST PROGRESS MEETING:

1. Finished water (meter) service work except at house #35 and Forbes
2. Started sod surface replacement for services
3. Set pressure reducing valves
4. installed air release valve at hill near Rosie lane
5. completed about 20 meter pit aprons
6. removed bollard on East Hunter that was in fence
7. "all town on new water and tank" except Forbes

WORK SCHEDULED FOR UPCOMING TIME

1. Well house electric
2. Surge relief and sump discharge piping. NCI lowered to keep from freezing and lengthened to discharge
3. Need electrical/control for temporary at well #5..**Decided on extra effort to run pump through new controls, Kent would run pump #5 manually till new pump #5 is installed, hopefully in two weeks*
4. Sod/seeding meter pit aprons
5. Rob Balderson coming this week *(*was on site today)* to set transducer and pressure switch for new control

6. Hooking up wells #4 and 5 hydraulically to new system (after electrical)

OLD ISSUES/RESOLUTION

1. Fire hall, fire hydrant relocation
2. Water service at west end of Gulch Lane for #35 house, stop exploratory and install inside meter???, Steve said District would not have a way to shut off water in street for this service. **Kent said #35 resident did not like the idea of no curb stop. All parties reviewed at site, it was decided to continue to explore at the main (where it was not exposed before) for day or two….*
3. WD #2…signed and approved. Adds 45 calendar days to contract time, also accepts the 4 weather days and winter shut down time. End date is now June 11th
4. Trying to determine which option to run well pump #5 temporary…have cost for revision with temp OL and breaker…*it was agree no temporary auto control necessary, Kent would run manually, Barry said the new pump and VFD should be in in a couple of weeks.*
5. WD#3…signed and approved. This was for well #5 pump and VFD
6. Cleaning and coating brick at well house
7. Modify drainage on the "hoot" side of building to allow storm water to flow out
8. need to install label on tank with the work WATER, to be below the SAND COULEE
9. Forbes property anything new? **Kent had paperwork from Judge that allows District to make connection*
10. *Review tank over flow drain into manhole structure, we do not know if current piping from tank overflow will go into drain without flooding at ground surface. … Steve would review fabrication of new hatch similar to design detail, also review similar hatch (lighter weight) with the two manhole sumps…possibly returning the cast hatch from structures*
11. Ralph and Barry started negotiations on extra/outside of contract items
12. Density test on hill slope did not pass. Barry said he visited with TDH and has some ideas and we would visit. Also need compactive effort with electrical trenches near well house
13. need storm water protection for tank hill side (incorporates BMP)
14. add check valve for well line to well #4, same situation as existing piping
15. Kent located where he wanted new frostless hydrant for well #5. We will try and reuse existing frostless hydrant at well #4. need materials for well #6 future install

NEW ISSUES

16. AC and base course gravel restoration….thinking now to use ½ original design section (1.5" AC over 5" base gravel adding a stabilization fabric and at an 18' width in the more damaged areas. Barry said would be a cost ($3/SY) if he has to mill the remaining existing AC to remove and waste. *NCI trying to set up a schedule for this effort on a sheet by sheet basis. *milling existing asphalt, may be needed to remove/waste off site, there may be a cost to milling, Barry would provide answer.*
17. #40 Rosie Lane, has existing drain field complaint??? **Would site review, the problem at this location, it was not a designated as access area before construction. Either Kent or DEQ would call the person and say we would dry land seed and put up fence posts or other barrier to keep people from driving on her property where water line went through, also we did not think her drain field was located here*
18. **Painting of electrical panel was discussed. District and Contractor did not want to paint. I visited with Jake later and he said whatever they want to do. Paint or not paint. NCI has specified this way on all other projects in order to keep a standard color and finish.*
19. **Empty of old tank, Kent said it leaks enough so will dewatering will not be a problem*
20. ** water meters, Boland can install, Manufacturer's rep wanted the District's book keeping program operable before tech provides information. Kent said he would call Black Mountain to get programing on board.*
21. **Install bollards at Forbes hydrant? talk to neighbor, Mieres still want bollards????*

22. **Barry said painter in on Friday*
23. **Ralph mentioned to Steve the height of the concrete collar at meter pits was really low on some of the pits and this could be a water pond. Steve said they would grade around collar to drain. Problem was sub Mike installed pit and then collar was set to match top of pit. If pit was low the collar is low*.

SUBMITTAL ISSUES / STATUS

1. Painting subcontractor can we get resume?

CONTRACTOR PAYMENTS

Latest Contractor pay request #6, for work through April 28th) NCI rec'd late May 7th and are working on this.

STATUS OF ANY CHANGES (affecting contract price or time)

See also prior meetings minutes

NEXT SCHEDULED MEETING

**Thursday May 21st at 11*

Sand Coulee
Water System Replacement
Boland Construction
Construction Progress Meeting No. 18 Minutes
** Comments made during meeting*

DATE: May 12, 2015

ATTENDANCE:

Name:	Representing:	Name:	Representing:
Tom Henderson	DEQ	Steve Carlson	EBC
Kent Luoma	SCWSD	Barry Boland	EBC
Ralph McGillivray	NCI	Krista Hanson	NCI
		Scott Karaffa	EBC
Mark Rhodes	Hydrometrics	Mary Ann Freeman	SCWSD

SCHEDULE:

Start Date: August 18, 2014
125 Calendar Days Contract Time, originally
45 +6 Calendar Days Contract Time Extensions which have been approved by WD #2
4 +2 Weather Days… (8-22-14, 10-2-14, 10-10-14 and 10-11-14) 4 Work and 2 Calendar days.
Contract End Date with weather days and winter shut down was May 6, add WD #2, 45 calendar days starting May 7 goes through June 11. June 11 is new contract end date. Also WD #3 adds 3 additional days for installing new well pump #5
21 Calendar Days remain after today

WORK COMPLETED SINCE LAST PROGRESS MEETING:

1. Finished water (meter) service work except at house #35 Gulch Lane
2. "all town on new water and tank"
3. installed deeper and longer sump and surge relief lines at meter pit (will be extra)
4. tied piping into well #4
5. **finished concrete collars a pits*

WORK SCHEDULED FOR UPCOMING TIME

1. Well house and manhole structure painting
2. Asphalt and base gravel, hill gravel and gravel streets restoration **Barry agreed this is a top priority, Barry was going to review cost for milling in order to waste and cost to do paving in two swats…*
3. Change location of fire hydrant at fire hall
4. Install the meters in pits
5. permanent piping tie into well #5
6. grading at top of well hill and well house and tank
7. finish house #35 Gulch water service

8. Empty existing water tank

OLD ISSUES/RESOLUTION

1. Fire hall, fire hydrant relocation
2. Water service at west end of Gulch Lane for #35 house. Kent said #35 resident did not like the idea of no curb stop. After reviewing at site, it was decided to continue to explore at the main (where it was not exposed before) for day or two….status? No work on this….
3. Status of well pump #5 and VFD arrival? **Barry said materials are in and would schedule this install for next Thursday 28th, he would let United Electric know (who would let Balderston know). Tank should be full before the new pump is installed*
4. Cleaning and coating brick at well house
5. Modify drainage on the "hoot" side of building to allow storm water to flow out
6. Need to install label on tank with the work WATER, to be below the SAND COULEE
7. Forbes meter connected this week "without incident"
8. Tank over flow drain into manhole structure, Boland to fabrication new hatch similar to design detail, also review similar hatch (lighter weight) with the two manhole sumps…possibly returning the cast hatch from structures
9. Ralph and Barry negotiations on extra/outside of contract items, some head way
10. Density test on hill slope still discussing. Also need the SWEPC plan submitted and approved
11. Add check valve for well line to well #4, same check valve situation as existing piping..was installed yesterday (extra)
12. AC and base course gravel restoration….submitted alternative plan for ½ original design section (1.5" AC over 5" base gravel adding a stabilization fabric and at an 18' width in the more damaged areas. Barry said would be a cost ($3/SY) if he has to mill the remaining existing AC to remove and waste. **And for installing in two swats*….Status?
13. Status of bollards at the Forbes hydrant*?* Two bollards were installed, Meyers are happy, also left a fastener if longer flag is wanted….

NEW ISSUES

1. As-recorded plans from Boland on water mains and service locations?
2. NCI's surveyor needs to get locations on water services.
3. Punch list? NCI gave copy to Boland **Ralph will add to these notes*
4. **Boland not working on Memorial Monday*
5. **Mary Ann's water pressure….we installed a new ¾" line to upgrade her service, she was feed before with 1" pipe, it was a 140' length of pipe that was changed. Static at her house 62 psi. Static at pressure reducer is 68 psi. When they turn on sprinkler system her pressure goes to 40 psi, her pressure use to be higher.*
6. **Ralph, Krista and Tom and Mark toured the town to review the pavement restoration schedule after the meeting.*

SUBMITTAL ISSUES / STATUS

CONTRACTOR PAYMENTS

Latest Contractor pay request #6, for work through April 28th, NCI rec'd late in day May 7th, NCI returned to Boland May 20th. Ralph will give to Tom today

STATUS OF ANY CHANGES (affecting contract price or time)

See also prior meetings minutes

NEXT SCHEDULED MEETING

**Tuesday June 2nd at 11*

Sand Coulee
Water System Replacement
Boland Construction
Construction Progress Meeting No. 19 Minutes
** Comments made during meeting*

**Krista w/NCI narrated the meeting for Ralph*

DATE: June 2, 2015

ATTENDANCE:

Name:	Representing:	Name:	Representing:
Thad Adkins	DEQ	Steve Carlson	EBC
Kent Luoma	SCWSD	Barry Boland	EBC
		Krista Hanson	NCI
		Scott Karaffa	EBC
Mark Rhodes	Hydrometrics	Mary Ann Freeman	SCWSD

SCHEDULE:

Start Date: August 18, 2014
125 Calendar Days Contract Time, originally
45 +6 Calendar Days Contract Time Extensions which have been approved by WD #2
Weather Days… (8-22-14, 10-2-14, 10-10-14 and 10-11-14) 4 Work and 2 Calendar days. Contract End Date with weather days and winter shut down was May 6, add WD #2, 45 calendar days starting May 7 goes through June 11. June 11 was contract end date. Also WD #3 adds 3 additional days for installing new well pump #5, plus added weather day on May 26, so from June 11, we add 1 weather day and 3 days for WD #3…which now extends end date to June 18th.
16 Calendar Days remain after today

WORK COMPLETED SINCE LAST PROGRESS MEETING:

1. Finished water (meter) service work except at house #35 Gulch Lane
2. Painted well house and manhole piping
3. Made permanent tie-in to 3" line from well #5
4. Installed frost free hydrant for well #5
5. Completed WD#3 for install of the new well pump #5 and VFD
6. Relocated FH at Fire hall
7. Cleaned roads

WORK SCHEDULED FOR UPCOMING TIME

1. Asphalt and base gravel, hill gravel and gravel streets restoration … we ended up back to original design sections with both efforts. Will still do the pulverized (Sierra material) for tank hill
2. Install the meters in pits
3. Grading by well house.
4. Finish house #35 Gulch water service.
5. Remove existing water tank. **Steel Etc. will be out tomorrow to remove*

6. Install chain link fence at tank (**started today*).
7. Install mixer. Sump pump, dehumidifier, and strip heater in flow meter manhole.
8. Slope manhole floors.

OLD ISSUES/RESOLUTION

1. Water service at west end of Gulch Lane for #35 house. Kent said #35 resident did not like the idea of no curb stop. After reviewing at site, it was decided to continue to explore at the main (where it was not exposed before) for day or two….status? No work on this…. **yes*
2. Cleaning and coating brick at well house **yes*
3. Modify drainage on the "hoot" side of building to allow storm water to flow out **yes*
4. Need to install label on tank with the work WATER, to be below the SAND COULEE **Scott said they are coming out to fix*
5. Tank over flow drain into manhole structure, Boland to fabrication new hatch similar to design detail, also review similar hatch (lighter weight) with the two manhole sumps…possibly returning the cast hatch from structures **Scott said these are being fabricated*
6. Ralph and Barry negotiations on extra/outside of contract items, some head way **Ralph had emailed a copy out Monday*
7. Density test on hill slope still discussing. Also need the SWEPC plan submitted and approved **Barry said he was working on this*
8. As-recorded plans from Boland on water mains and service locations? (Steve said these were at Boland's office) **NCI will pick up at Boland's office*
9. NCI's surveyor needs to get locations on water services.
10. Punch list? NCI gave Krista's copy to Boland last meeting. **Krista had added a strip heater to her list* Ralph comprised notes for punch list will give out today **the items were discussed at meeting and will be sent out (revised)*
11. Mary Ann's water pressure….we installed a new ¾" line to upgrade her service, she was feed before with 1" pipe, it was a 140' length of pipe that was changed. Static at her house 62 psi. Static at pressure reducer is 68 psi. When they turn on sprinkler system her pressure goes to 40 psi, her pressure use to be higher. Only thing we can offer is to raise pressure at the pressure reducer. **was a suggestion that a bursting method could increase the ¾" pipe to 1" pipe, Barry will provide a estimated cost*

NEW ISSUES

1. Can we possibly add a drain line from PRV structure which would oulet at rusty ditch? Ralph had Krista give Steve a copy of plan….need a cost **Kent didn't really want the drain, but would visit with the other board members, Barry would give an estimated cost*

SUBMITTAL ISSUES / STATUS

CONTRACTOR PAYMENTS

Latest Contractor pay request #7, for work through May 28th

STATUS OF ANY CHANGES (affecting contract price or time)

See also prior meetings minutes

NEXT SCHEDULED MEETING

**next Thursday June 11th*

Sand Coulee
Water System Replacement
Boland Construction
Construction Progress Meeting No. 20 Minutes
** Comments made during meeting*

**Krista w/NCI narrated the meeting for Ralph*

DATE: June 11, 2015

ATTENDANCE:

Name:	Representing:	Name:	Representing:
Pat Darko	SCWSD	Steve Carlson	EBC
Kent Luoma	SCWSD	Barry Boland	EBC
Ralph McGillivray	NCI	Krista Hanson	NCI
		Scott Karaffa	EBC
Adam Jourdonnais	Hydrometrics		

SCHEDULE:

Start Date: August 18, 2014
125 Calendar Days Contract Time, originally
45 +6 Calendar Days Contract Time Extensions which have been approved by WD #2
Weather Days… (8-22-14, 10-2-14, 10-10-14 and 10-11-14) 4 Work and 2 Calendar days. Contract End Date with weather days and winter shut down was May 6, add WD #2, 45 calendar days starting May 7 goes through June 11. June 11 was contract end date. Also WD #3 adds 3 additional days for installing new well pump #5, plus added weather day on May 26, so from June 11, we add 1 weather day and 3 days for WD #3…which now extends end date to June 18th.
7 Calendar Days remain after today

WORK COMPLETED SINCE LAST PROGRESS MEETING:

1. Preparation for restoration on roads, gravel surfacing in alley behind PO, also 80% done with prepping for asphalt restoration on Dahn's lane….
2. Fence at tank
3. Weather stripping, base boards, shop bench at well house

WORK SCHEDULED FOR UPCOMING TIME

1. Continue asphalt and base gravel, hill gravel and gravel streets restoration … we ended up back to original design sections with both efforts at most locations. Will still do the pulverized (Sierra material) for tank hill and using City asphalt millings for the remainder quantity at hill and at Kent's lane
2. Install the meters in pits
3. Grading by well house.
4. Finish house #35 Gulch water service.
5. Remove existing water tank. **completed today, told both Barry and Steve make sure there is no unsafe objects left on this site, do not want kids to get hurt.*
6. Install mixer. Plumb sump pump drain and surge relief piping, add dehumidifier shelf, and strip heater in

flow meter manhole. *(PAX *mixer guy (Brian Yarnnell) on site today, he needs a GFI breaker for this to operate. He visited with Kent and Pat on operation. It sits vertically in tank, runs continuously, change motor every 5 years….*

7. Slope floors at meter manhole and PRV manhole.
8. Look at updated punch list (attached)
9. **Paving on Tuesday and Wednesday, prep on Monday 15th.*
10. **Boland working on Saturday, NCI Brad said he could do density testing on Saturday*
11. **installing meters next week, will be a while yet before bookkeeping will be able to read meters and bill*

OLD ISSUES/RESOLUTION

1. Water service at west end of Gulch Lane for #35 house. Steve said roads priority. This needs to be done within the contract time…..**Kent and Steve said Tom had said to continue exploratory to find service line even if we have to knock down the stone wall. Barry said this exploratory work not a priority and did not have manpower to complete this task now*
2. Cleaning and coating brick at well house **Cooper to busy, Boland will do this*
3. Modify drainage on the "hoot" side of building to allow storm water to flow out **Ralph and Barry looked at after meeting maybe discharge north of gravel parking area and add culver*t, *also at gravel access into tank site add another culvert*
4. Need to install label on tank with the work WATER, to be below the SAND COULEE, Scott said they are coming out to fix **done*
5. Tank over flow drain into manhole structure, Boland to fabrication new hatch similar to design detail, also review similar hatch (lighter weight) with the two manhole sumps…got hatches for tank OF and for meter manhole, unsure where PRV hatch is…**PRV hatch is on its way*
6. Ralph and Barry negotiations on extra/outside of contract items, no effort this week, but this effort needs to continue
7. Density test on hill slope still discussing. Also need the SWEPC plan submitted and approved. Barry said he was working on this
8. As-recorded plans from Boland on water mains and service locations. NCI will picked up two sets of plans at Boland's office, these plans had no notes on water services. NCI did get some notes on some services. Krista and David Neeley (NCI surveyor) are reviewing situation and will provide list on where we need more information for water services. NCI's surveyor has location on **all pit locations, except #35 Gulch. Just trying to make sure we have locations on water service lines installed beyond pits that took a curved and bended route to tie to existing water service.*
10. Punch list? NCI will give revised list with meeting notes.
11. Sump drain from PRV structure to creek off the list.

NEW ISSUES

1. Our contractual project closeout steps see supplemental conditions – Article 6.3.
2. Extra contractor work time during day (Boland needs to get the longer construction day approved), NCI's compaction testing now requires extra time.
3. Need to get "start-up schedule for Pump controller operation" and for mixer operation**mixer information/training done this PM. Also need to run training school on (Badger) meter operation and collecting data. When installing meters, Boland needs to keep track of serial number of both the meter and sender unit and what house each goes to, this will be used in billing operation. Training with Black Mountain billing is not a Boland situation.*
4. Painting outside electrical at well house…see Ralph's photos
5. **Ralph get Barry copy of the WD with electrical modifications. WD-1*
6. **Ralph and Steve went through gravel restoration…we would allow some of the new gravel to go over the top of the existing surface to save some of the prior gravel material, but there was not to be any damming of storm water due to higher gravel surfaces.*
7. **"ground" water coming into the water meter manhole????? what is source? need to close off open area*

of sump to concrete base slab.

8. **Barry said he had weather days??? I said I did not think there was any, Krista has been on site all the way through. Supposedly on May 28th Steve's surfacing crew quit at 10:30 AM, but well #5 (WD-#3) installer and painter worked on through the day, Krista inspected all this day.*

SUBMITTAL ISSUES / STATUS

CONTRACTOR PAYMENTS

Latest Contractor pay request #7, for work through May 28th

STATUS OF ANY CHANGES (affecting contract price or time)

See also prior meetings minutes

NEXT SCHEDULED MEETING

next …., June **will see*

APPENDIX B-4

Pipe from existing system.

Fabric for Tank Hill Road and apron around tank.

Pipe from existing system (1/8” thick wall).

Station 10+90 Gulch Lane. Note: Coal seams. Boland started construction August 18, 2014.

New 8” C900 PVC.

Station 10+90 Gulch Lane.

Excavating down Lower Gulch Lane.

Pipe trench near House 63 Upper Gulch.

Laying pipe near House 63 Upper West.

Culvert extension on Tank Hill Road.
Placed concrete block at connection.

Marker tape placed above all mainline to help protect pipe from excavation work.

Tank hill road and well house construction.

Tank Hill Road construction.

Tracer wire taped to mainline (to help find PVC pipe later).

Excavation for footing at well house.

Pipe fitting.

6.5 feet of bury over top of new water line.

Laying pipe on Gulch Lane.

Trench plug on Gulch Lane; to stop ground water migration.

Laying pipe on Gulch Lane.

Existing service pit for House 65.

Ground water on Gulch Lane; saving existing water main.

Laying pipe on Upper West, below house #63. Trying to save trees.

Laying pipe on Upper West.

Laying pipe on upper west, near house #63

Fabric and base course on tank hill road.

Compacting well house footing foundation.

Hydrant by House 65 on Upper West.

Laying pipe on Upper West at House #67.

Gravel pad for air release manhole behind fire hall.

Using laser to keep pipe flat behind Fire Hall.

Meter pit and curb stop installed in Rusty Ditch groundwater at House 51 Gulch Lane.

Well house footing and foundation.

Stabilization fabric and base course on tank hill road.

Coal ash near house #67 Upper (West).

Vertical bend behind Fire Hall for fire hydrant.

Fusion (of pipe joints) machine for fusible PVC.

Installing Styrofoam board insulation (at interior) of foundation wall.

Fire hydrant and pipe on northeast side of fire hall (this hydrant was later relocated).

Corrosion on existing curb stop from Rusty Ditch ground water.

Well house footing and foundation walls.

Air release manhole base.

Meter pit installation.

Air release manhole.

Directional drill equipment. Company was 406-Helena.

Existing 4” and 1 ½” water, note extensive exploratory effort in this area.

60’ fusible PVC at East Hunter crossing.

Fusion location. This fusible pipe matches all the other; C-900 PVC pipe installed.

Directional drill with fusible PVC under East Hunter.

Directional drill under East Hunter.

Directional drill under East Hunter.

Bore rod.

Directional drill location under Rusty Ditch.

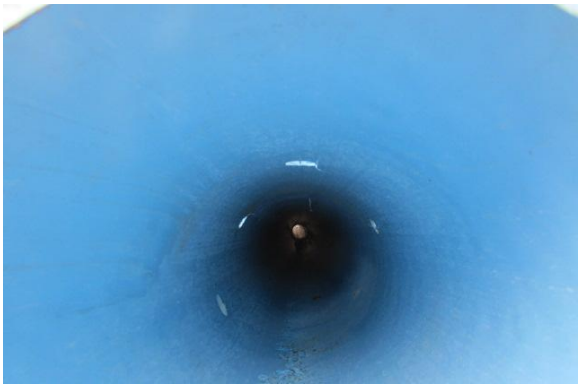

View (TV'D) through pipe under East Hunter.

Directional drill under Rusty Ditch.

Directional drill under Rusty Ditch.

Directional drill under Rusty Ditch.

Directional drill under Rusty Ditch.

Connecting to pipe from directional drill under Rusty Ditch. Installing GV and box.

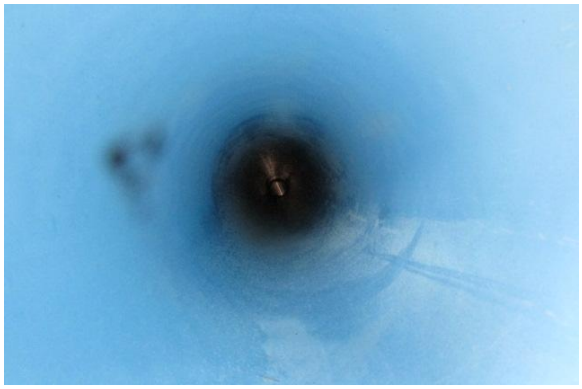

View (TV'D) through pipe under rusty ditch.

Directional drill under Rusty Ditch.

Excavating for directional drill under Rusty Ditch near bridge, near Gulch Lane.

Directional drill under Rusty Ditch by bridge.

Laying inflow, outflow, and drain pipe under tank.

Poured slab for well house.

Bend/pipe bedding in Dusko's Alley.

Compacting tank subgrade with bulldog. Laying inlet, outlet, and overflow drain pipe. Lines were air tested.

Laying pipe in Dusko's Alley.

Rebar for tank footing.

Hitting rock on Miners Lane near station 7+50.

Forms for tank footing.

Hitting rock on Miners Lane near station 7+50.

Footing tie bars and 8 rings of circumferential footing rebar.

Working around fiber lines on Miners Lane near station 7+00.

Density testing performed on tank foundation (imported gravel material).

Digging with soft vac to locate service line in west alley. This effort took a lot of time.

Tank foundation and inlet, outlet and overflow drain pipe.

Poured foundation footing with concrete pumping truck. Placed concrete in three (3) 14” lifts. Each lift was followed with stinger to remove air.

Compacting with wacker around fire hydrant. Dusko’s Alley Station 2+00.

Concrete pump truck was used for pouring tank footing concrete.

Foundation bolts and leveling plates for attaching and leveling foundation sheet.

Temporary water down West Alley.

Tank overflow splash pad.

Horizontal reinforcing “DUR-O-WALL”

Laying pipe from PRV manhole to existing 6” PVC.

Well house wall - 3 #5 rebar at corners.

Northeast wall of well house.

Connection to existing 6” water main near Gulch Lane and bridge. Installed 6” valve on existing main and 8”x6” pipe fitting.

Tank footing and wall.

Installing thrust block on vertical bend near connection to existing main. Note tap for testing.

Check valve preventing backflow on hydrant for temporary water setup.

Layout of connection to existing main.

Layout of connection to existing main – thrust block at existing main, 6” valve, 6”x8” reducer, vertical and horizontal bends.

Layout of connection to existing main.

Well house wall - Bond Beam

Well house exterior wall – bond beam and #4 vertical rebar.

Coated curb boxes for Gulch Lane to prevent corrosion due to Rusty Ditch groundwater.

Brick veneer, soldier course and poly-styrene board, at base of wall.

2” diameter service line to Fire Hall.

Old service line to Fire Hall.

Rebar in tank foundation.

Temporary repair of old galvanized service line going into Fire Hall.

PRV manhole, note old tank on hill side.

Excavation and installation of fire hydrant and curb stop and box at House 35 Gulch Lane. Note, existing rock wall in area. We added more main to locate fire hydrant further from House #35 closer to property line.

Drain pipe and sump.

Well house construction.

Pouring tank foundation.

Leveling/sloping tank floor.

Water tank construction. Temperature was 15 below. (Sealant was still flexible).

Water tank construction.

Cathodic protection on tank floor.

Installing ladder, step-off platforms, roof walkway and guard rail.

Location on outside of tank for testing cathodic protection.

Installing web truss stiffeners.

Thrust block on vertical bend uphill from PRV manhole.

Installing metal soffit at well house building.

Adding concrete section to raise top of PRV manhole to grade.

Inside inflow meter manhole piping.

Insulating PRV manhole.

Rebar for sidewalk around well house.

Pump controls/starters.

Transformer (is a “warm” device).

Pump controls/PLC

Local power panel.

Heater.

Compacting up hill.

Laying pipe up tank hill.

Laying pipe up tank hill.

Compacting up hill.

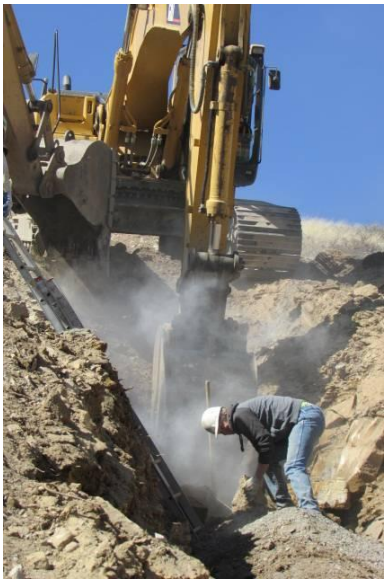
Excavating up tank hill.

Laying pipe up tank hill.

Trench plug on tank hill.

2” tee for well #4, also 6”x3” reducer and 3” valve for future well #6.

Removing large rock on hillside.

Temporary connection to pipe coming from well #5.

Conduit for tank mixer.

Witching for service line at Dahns #125 (log house).

Witching for service line at log house Dahn's #125.

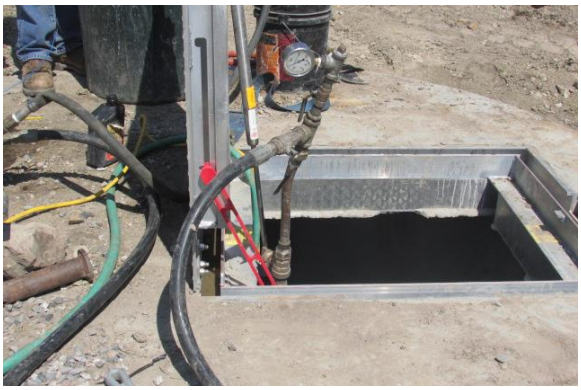
Pressure testing pipeline on hill. Reading pressure at PRV manhole.

Vac'ing for service line at Gulch House #35.

Vac'ing for service line at Dahns #125 (log house).

Finally located curb stop at Dahns 125.

Continued location efforts for service line.

Vac'ing for service line at #35 Gulch.

Continued location efforts for service line.

Location efforts continue for service line.

Continued location efforts for service line (Locating this service line took lots of effort).

Service line located. (Meter pit installed at #35).

Well pump.

Installing new pump and galvanized well pipe in well #5.

Hooking Mr. Forbes up to the new water main after a court order to do so!

Installing new pump in well #5.

Meter pit apron (to help stabilize for traffic on top of pit).

Core drilling hole in inflow meter manhole for sump drain pipe and pressure relief drain pipe.

HDPE SDR7 water service pipe.

Sod restoration at bottom of tank hill.

Wattles for erosion control, to tank hill.

Digging service lines to House 531 and 537. (Note, coal material in backfill).

Gravel surface restoration in west alley. Note, densometer testing density.

Work bench in well house.

Galvanized grate to replace cast iron grates in manholes; “lighter” then the cast iron gates.

Painting interior of well house.

Excavation for base course and asphalt on Dahn’s.

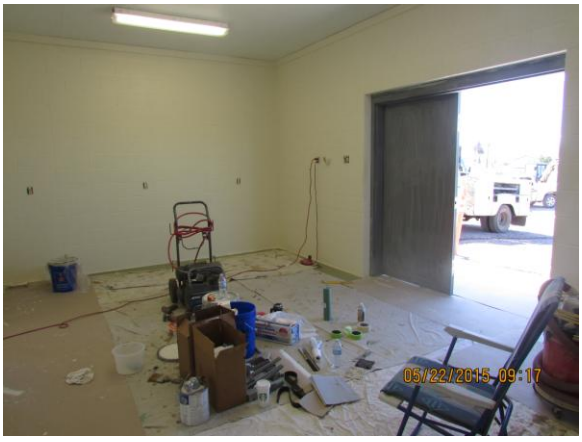

Painting interior of well house.

Compacting base course in preparation for asphalt.

Compacting base course in preparation for asphalt. 10” depth base gravel and 3” depth of asphalt.

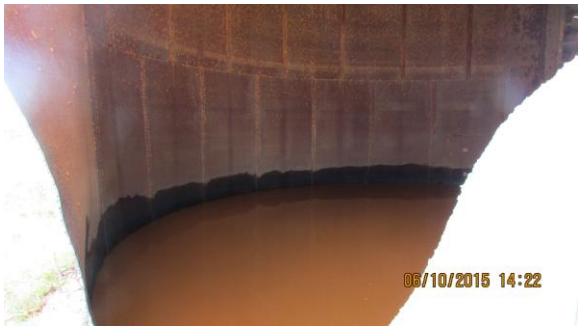

Inside of the old water tank.

Density testing base course.

Demolition of old tank!

Demolition of old tank. Water looks like Rusty Ditch.

Security fence around new water tank.

Laying asphalt on Dahn's Lane.

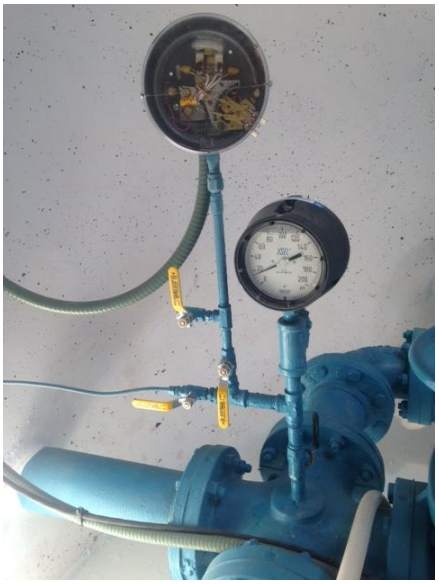

Pressure switch and pressure gauge in inflow meter manhole.

New well house.

New water tank.

Piping, valves and flow meter in inflow meter manhole.

New well house and water tank site.

Inflow meter manhole.

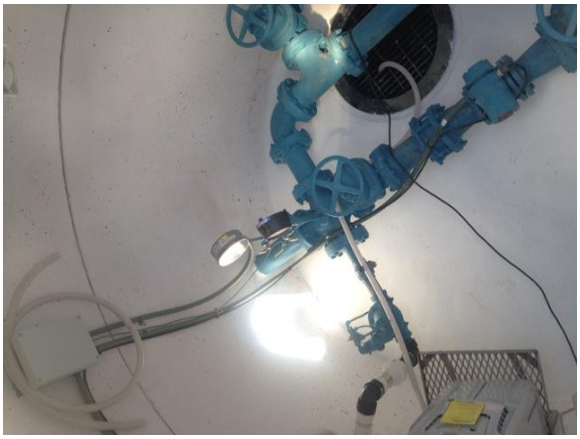

Inflow meter manhole. (Note, drain hose from dehumidifier to sump).

Dehumidifier and strip heater in inflow meter manhole.

Plugging old water main with concrete block. Project substantially ended June 25, 2015.

Placing asphalt millings on tank hill road.

Placing millings on tank hill road.

Sand Coulee Well House.

Sand Coulee Water Tank.

APPENDIX B-5

SAND COULEE WATER SYSTEM REPLACEMENT PROJECT Schedule 1 - Water Distribution			SAND COULEE WATER SYSTEM REPLACEMENT PROJECT PREBID SCHEDULE			SAND COULEE WATER SYSTEM REPLACEMENT PROJECT AS CONSTRUCTED		Reconcilliation		REMARKS
ITEM NO.	ITEM	UNIT	ESTIMATED QUANTITY	UNIT BID PRICE	TOTAL	Final Quantity	Completed Amount	Quantity (Over)/Under	Amount (Over)/Under	
101	8" PVC C-900, CL200	L.F.	8,957	$54.00	$483,678.00	8,957	$483,678.00	0	$0.00	
102	8" Gate Valve	EA	22	$1,700.00	$37,400.00	23	$39,100.00	1	$1,700.00	*Increased quantity at the approval of the Engineer CO #1
103	6" PVC C-900, CL200 (FH mains)	EA	847	$48.00	$40,656.00	880	$42,240.00	33	$1,584.00	
104	RESERVED				$0.00	0	$0.00	0	$0.00	
105	3/4" Water Service Line (HDPE IPS SIDR7) and Future Stub	L.F.	1600	$35.00	$56,000.00	4117	$144,095.00	2517	$88,095.00	*Increased quantity to connect to the existing water service line to the new layout of the water main lines. CO #1
106	3/4" Water Service Connect to New Main	EA	67	$445.00	$29,815.00	77	$34,265.00	10	$4,450.00	*Increased quantity, coordinated with the SCWD to provide potable water to the community. CO #1
107	3/4" Curb Stop and Box	EA	78	$685.00	$53,430.00	87	$59,595.00	9	$6,165.00	*Increased quantity, coordinate with the SCWD to provide potable water to the community. CO #1
108	3/4" Water Service Connect to Existing Line	EA	89	$450.00	$40,050.00	107	$48,150.00	18	$8,100.00	*Increased quantity, coordinate with the SCWD to provide potable water to the community. CO #1
109	5/8" x 3/4" Meter (and Meter Pit Installation)	EA	78	$1,950.00	$152,100.00	83	$161,850.00	5	$9,750.00	*Increased quantity, coordinate with the SCWD to provide potable water to the community. CO #1
110	Fire Hydrant Assembly	EA	22	$5,000.00	$110,000.00	22	$110,000.00	0	$0.00	
111	Imported Bedding - Type 1 (Pipe)	C.Y.	1,700	$16.00	$27,200.00	1544.53	$24,712.48	-155.47	-$2,487.52	*Decreased quantity at the approval of the Engineer based on the properties of the native backfill materials. CO #1
112	Bedding - Type 2 (Trench Stabilization)	C.Y.	260	$28.00	$7,280.00	10.5	$294.00	-249.5	-$6,986.00	*Decreased quantity at the approval of the Engineer based on the properties of the native backfill materials. CO #1
113	Connect New (6" or 8") Main to Existing (6") Main	EA	1	$775.00	$775.00	1	$775.00	0	$0.00	
114	Fire Hydrant Guard Post Assembly	EA	6	$950.00	$5,700.00	7	$6,650.00	1	$950.00	*Increased quantity at the approval of the Engineer to protect Well #5 from damage. CO #1
115	Sampling Station	EA	2	$2,700.00	$5,400.00	0	$0.00	-2	-$5,400.00	*Decreased quantity, coordinate with the SCWD.
116	Temporary Water	L.S.	1	$40,000.00	$40,000.00	1	$40,000.00	0	$0.00	
117	Flowable Fill Trench Plug	EA	3	$800.00	$2,400.00	4	$3,200.00	1	$800.00	*Increased quantity at the approval of the Engineer to limit groundwater flow through a portion of the backfilled pipe trench. CO #1
118	RESERVED				$0.00	0	$0.00	0	$0.00	
119	RESERVED				$0.00	0	$0.00	0	$0.00	
120	2" ∅ Meter (in Fire Hall) and 2" Service Piping	L.S.	1	$9,200.00	$9,200.00	1	$9,200.00	0	$0.00	
121	Pressure Reducing Station	L.S.	1	$24,000.00	$24,000.00	1	$24,000.00	0	$0.00	
122	Meter Reading, Software and Training	L.S.	1	$11,500.00	$11,500.00	1	$11,500.00	0	$0.00	
123	RESERVED				$0.00	0	$0.00	0	$0.00	
124	Directional Drilling with 6" or 8" HDPE Pipe	L.F.	240	$270.00	$64,800.00	240	$64,800.00	0	$0.00	
125	Auto Air Release Manhole	EA	1	$2,850.00	$2,850.00	2	$5,700.00	1	$2,850.00	*Increased quantity at the approval of the Engineer to improve system functionality. CO #1
	SCHEDULE 1 TOTAL				**$1,204,234.00**		**$1,313,804.48**		**$109,570.48**	
Schedule 2 - Storage Tank										
ITEM NO.	ITEM	UNIT	ESTIMATED QUANTITY	UNIT BID PRICE	TOTAL	Final Quantity	Completed Amount	Quantity (Over)/Under	Amount (Over)/Under	
201	Unclassfield Excavation/Site	L.S.	1	$10,000.00	$10,000.00	1	$10,000.00	0	$0.00	
202	Foundation	L.S.	1	$48,000.00	$48,000.00	1	$48,000.00	0	$0.00	
203	150,000 gal Storage Tank	L.S.	1	$210,000.00	$210,000.00	1	$210,000.00	0	$0.00	DEQ approved following test pits and piezomer installation
204	Tank Level Control Manhole	L.S.	1	$2,500.00	$2,500.00	1	$2,500.00	0	$0.00	
205	Inlet Piping (From Wells to Tank) and Valves	L.S.	1	$30,000.00	$30,000.00	1	$30,000.00	0	$0.00	
206	Outlet Piping (Tank to 1+00)	L.S.	1	$2,500.00	$2,500.00	1	$2,500.00	0	$0.00	
207	Overflow/Drain Piping and Valve	L.S.	1	$14,000.00	$14,000.00	1	$14,000.00	0	$0.00	
208	Flow Meter Manhole	L.S.	1	$34,000.00	$34,000.00	1	$34,000.00	0	$0.00	
209	Security Fence at Storage Tank	L.F.	220	$30.00	$6,600.00	220	$6,600.00	0	$0.00	
210	Existing Storage Tank Removal	L.S.	1	$12,500.00	$12,500.00	1	$12,500.00	0	$0.00	
211	Submersible Mixer	L.S.	1	$17,000.00	$17,000.00	1	$17,000.00	0	$0.00	
	SCHEDULE 2 TOTAL				**$387,100.00**		**$387,100.00**		**$0.00**	
Schedule 3 - Pumping (Well House)										
ITEM NO.	ITEM	UNIT	ESTIMATED QUANTITY	UNIT BID PRICE	TOTAL	Final Quantity	Completed Amount	Quantity (Over)/Under	Amount (Over)/Under	
301	Excavation, Grading and Concrete	L.S.	1	$12,300	$12,300.00	1	$12,300.00	0	$0.00	
302	Utility Company Electrical Service Upgrade	L.S.	1	$2,500	$2,500.00	1	$2,500.00	0	$0.00	
303	Masonry Install	L.S.	1	$43,500	$43,500.00	1	$43,500.00	0	$0.00	
304	Building Roof, Interior, Doors and Painting	L.S.	1	$16,200	$16,200.00	1	$16,200.00	0	$0.00	
305	General Electrical	L.S.	1	$17,000	$17,000.00	1	$17,000.00	0	$0.00	
306	SCADA, Control and Webcast	L.S.	1	$105,000	$105,000.00	1	$105,000.00	0	$0.00	Final ten percent paid on Request #8
307	Heating	L.S.	1	$2,000	$2,000.00	1	$2,000.00	0	$0.00	
308	RESERVED				$0.00	0	$0.00	0	$0.00	
	SCHEDULE 3 TOTAL				**$198,500.00**		**$198,500**		**$0**	
Schedule 4 - Surface Restoration and Miscellaneous										
ITEM NO.	ITEM	UNIT	ESTIMATED QUANTITY	UNIT BID PRICE	TOTAL	Final Quantity	Completed Amount	Quantity (Over)/Under	Amount (Over)/Under	
401	Mobilization, Bonding, Insurance	L.S.	1	$148,000.00	$148,000.00	1	$148,000.00	0	$0.00	
402	Layout and Construction Staking	L.S.	1	$36,000.00	$36,000.00	1	$36,000.00	0	$0.00	
403	Traffic Control	L.S.	1	$12,500.00	$12,500.00	1	$12,500.00	0	$0.00	
404	Record Documents	L.S.	1	$19,500.00	$19,500.00	1	$19,500.00	0	$0.00	
405	Exploratory Excavation	H.R.	15	$165.00	$2,475.00	506	$83,490.00	491	$81,015.00	*Increased quantity as approved by Engineer to minimize damage to existing buried infrastructure including septic services and was required for the successful execution of the project. CO #1
406	Culvert Replacement (with Distribution)	L.F.	200	$42.00	$8,400.00	6	$252.00	-194	-$8,148.00	*Decreased quantity at the approval by the Engineer.
407	Asphalt and BC Gravel Restoration (3"/10")	S.Y.	1932	$30.00	$57,960.00	2001	$60,030.00	69	$2,070.00	*Increased quantity to provide better surfacing.
408	Tank Access Roadway (4" depth)	S.Y.	3413	$9.00	$30,717.00	3493	$31,437.00	80	$720.00	
409	Gravel Surface Restoration (6" depth)	S.Y.	4975	$12.00	$59,700.00	5127	$61,524.00	152	$1,824.00	*Increased quanitity to provide better surfacing.
410	Geotextile Stabilization Fabric	S.Y.	1400	$2.50	$3,500.00	1400	$3,500.00	0	$0.00	
411	Gravel Fill (Pit-Run)	C.Y.	168	$29.00	$4,872.00	227	$6,583.00	59	$1,711.00	*Increased quantity to provide better surfacing.
412	Dryland Seed Restoration	L.S.	1	$5,000.00	$5,000.00	1	$5,000.00	0	$0.00	
413	Culverts and Tank Hill	L.S.	1	$1,500.00	$1,500.00	1	$1,500.00	0	$0.00	
414	Lawn Sod Restoration	S.Y.	620	$16.00	$9,920.00	842	$13,472.00	222	$3,552.00	
415	Concrete Slab	S.Y.	50	$90.00	$4,500.00	6	$540.00	-44	-$3,960.00	*Decreased quantity due to the field amount required.
416	Existing Sewer Drain or Drainfield Pipe Repair	L.F.	200	$18.00	$3,600.00	50	$900.00	-150	-$2,700.00	*Decreased quantity due to the field amount required.
	SCHEDULE 4 TOTAL				**$408,144.00**		**$484,228.00**		**$76,084.00**	
				CONSTRUCTION TOTAL	**$2,197,978.00**		**$2,383,632.48**		**$185,654.48**	

APPENDIX B-6

SAND COULEE, MONTANA, WATER TANK INVESTIGATION

1 PURPOSE AND OBJECTIVES

The objective of the Sand Coulee, Montana, water tank investigation is to determine if the decreasing water levels within the Sand Coulee water tank are from evaporation or a leak in the tank. This Technical Memorandum (memo) summarizes the project background and objectives, lists the investigation and data collection and interpretation process, and summarizes the conclusions.

2 BACKGROUND

The community of Sand Coulee, Montana, is located approximately 12 miles southeast of Great Falls, Montana, and relies on a public water supply, including a 31-foot diameter tank, to supply the town's water requirements. In 2015, the Montana Department of Environmental Quality (DEQ) constructed the tank on the hillside southwest of town that overlooks the valley.

Following construction of the tank, initial water level measurements (Table 1) and photographs collected by Montana DEQ personnel (Photograph 1 through Photograph 3) suggested that the water level in the tank appeared to be decreasing. To follow up on this possibility, the Montana DEQ retained Pioneer Technical Services, Inc. (Pioneer) to further assess the possibility of a leak within the tank using more accurate technology (i.e., automated water level recorders [transducers]).

3 WATER TANK INVESTIGATION

For the tank investigation, water level data was collected from transducers within the tank to determine whether the decrease in water level was due to (1) evaporation or (2) a leak. Water levels were continuously recorded from transducers within the tank and from within a 5-gallon bucket suspended within the tank. Pioneer collected data from October 19-22, 2015, and Montana DEQ collected data from October 29 through November 2, 2015.

3.1 Equipment

The equipment used for this investigation included the following:

1. Two AquiStar® transducers, model PT2X[1], with vented cable and 0-1 pounds per square inch (PSI) range (Photograph 4).
2. One 5-gallon bucket with measuring increments.
3. A water level meter.

[1] Note: The small daily decrease in water level initially recorded by the Montana DEQ required a transducer model sensitive enough to measure this decrease and still be within the manufacturer's rated accuracy. Any transducer model with a full scale rating of 6.6 feet (2 PSI) or less met that criteria with an accuracy of plus or minus 0.003 feet. The AquiStar® model PT2X transducer with vented cable and 0-1 PSI range met the criteria.

4. A camera.

3.2 Data Collection

October 19 through 22, 2015
Pioneer personnel visited the site to manually measure the distance to the water level inside the tank, take photographs, and deploy two transducers for 72 hours. To determine the change in water level within the tank, a water level transducer was suspended below the surface of the water in the tank.

To measure the change in water level within the tank due to evaporation, a 5-gallon bucket was filled with water and hung from the access hatch inside the tank. A water level transducer was situated below the water level in the bucket. Figure 1 shows the data recorded from this transducer.

When the test was completed, it was determined that the transducer placed inside the tank to record the change in water levels was deployed outside its suggested operating range. Consequently, the data was deemed invalid.

October 29th through November 2nd, 2015
To remedy the invalid water level data within the tank, Montana DEQ personnel inserted a transducer within the water tank on October 29, 2015, and recorded data for approximately 90 hours. Figure 2 shows the data.

Table 1 lists all the data collected manually. The CD included with this report contains all the electronic data collected.

3.3 Evaluation

To meet the investigation objective, Pioneer evaluated the data collected and created graphical representations of the data from each transducer (Figures 1 and 2), and completed regression statistics (provided on the CD included with this report). Among other values, these statistics calculated the R-squared (R^2) statistical measure of how close the information fitted to a regression line. This regression line was then used to determine the rate of water level decrease within the 5-gallon bucket and the tank.

Evaluation of Water Levels within the Tank
Using manual water level measurements, Montana DEQ calculated an initial decrease in water level of approximately 0.125 inches per day (0.0104 feet per day [fpd] or 58.8 gallons per day [gpd]) based on measurements taken during the earlier site visits.

The transducer measurements within the tank (graphically shown on Figure 2 with a trendline fitted to the data) indicate that the decrease in water level is approximately 0.017 fpd. The R^2 value for this line is 98.9 percent (%), indicating a very strong correlation of the data to the linear equation. Based on this relationship, the calculated slope can be equated to the daily drawdown of the water level inside of the tank with a high confidence level. At a decrease of approximately

0.017 fpd and assuming an inner diameter of 31 feet, the tank appears to be losing approximately 96 gpd, or 0.067 gallons per minute (gpm).

Evaluation of Evaporation Potential
The transducer measurements within the 5-gallon bucket are provided on Figure 1, and a trendline fitted to the data indicates that the decrease in water level is approximately 0.0011 fpd. The R^2 value for this line is 15.3 percent (%), indicating no correlation of the data to the linear equation. Based on these results, the apparent decrease in water level that can be attributed to evaporation is small, and the poor R^2 value suggests that the decrease in water level due to evaporation is not consistent.

4 CONCLUSIONS

In comparing the rate of water level decrease in the 5-gallon bucket to the decrease within the tank, the evaporation in the bucket was approximately $1/10^{th}$ that of the loss recorded within the tank (Figures 1 and 2). Based on this, the decrease in water level cannot be attributed to evaporation; therefore, the decrease in water level within the tank is due to a leak. Furthermore, the tank appears to be losing approximately 96 gpd, or 0.067 gpm.

TABLE

Date	Time	DTW	units		days	hours	Δ days		inches	Δ in		inch/d	gpd	gph
10/9/2015	10:00 AM	27-1/2	inches		-	-	-		27.50	-		-		
10/12/2015	10:00 AM	27-13/16	inches		3.00	0.00	3.00		27.81	0.31		0.10	49	2.0
10/14/2015	10:30 AM	28-5/16	inches		2.00	0.50	2.02		28.31	0.50		0.25	116	4.9
10/15/2015	1:00 PM	28-10/16	inches		1.00	2.50	1.10		28.63	0.31		0.28	133	5.5
10/26/2015	1:30 PM	30-1/4	inches		11.00	0.50	11.02		30.25	1.63		0.15	69	2.9
10/29/2015	3:00 PM	30-14/16	inches		3.00	1.5	3.06		30.875	0.63		0.20	96	4.0

Table 1. Sand Coulee Water Tank Manual Water Level Measurements

PHOTOGRAPHS

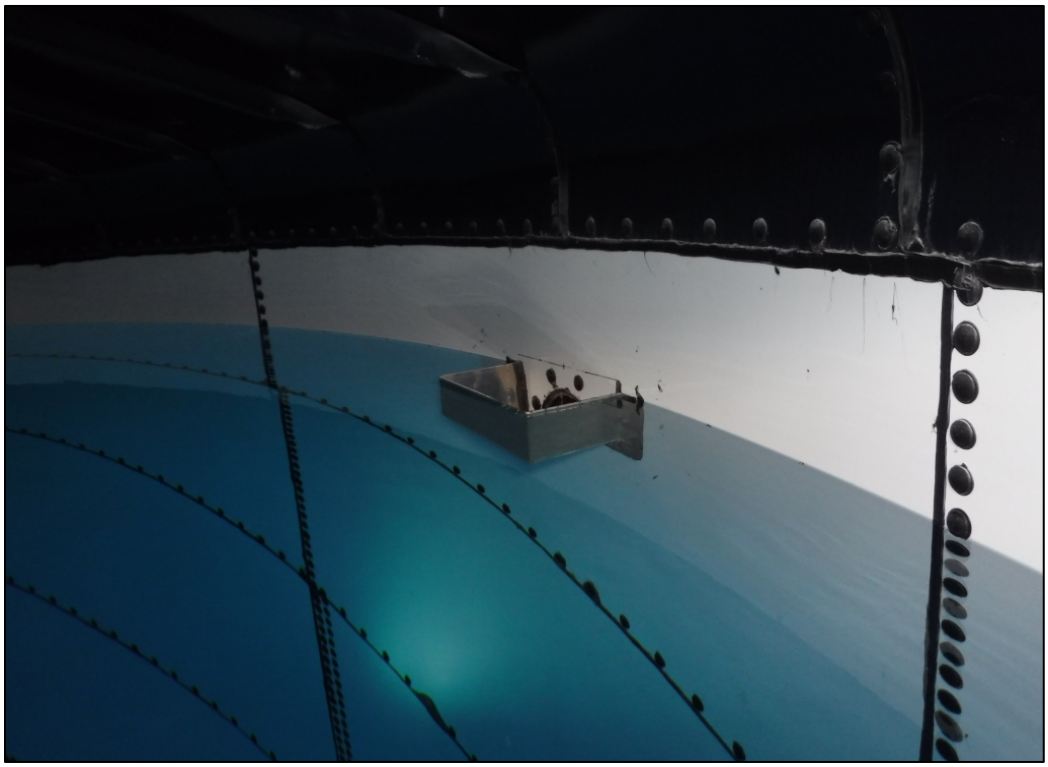

Photograph 1. Public water supply tank water level on October 9, 2015, at 2:18 PM.

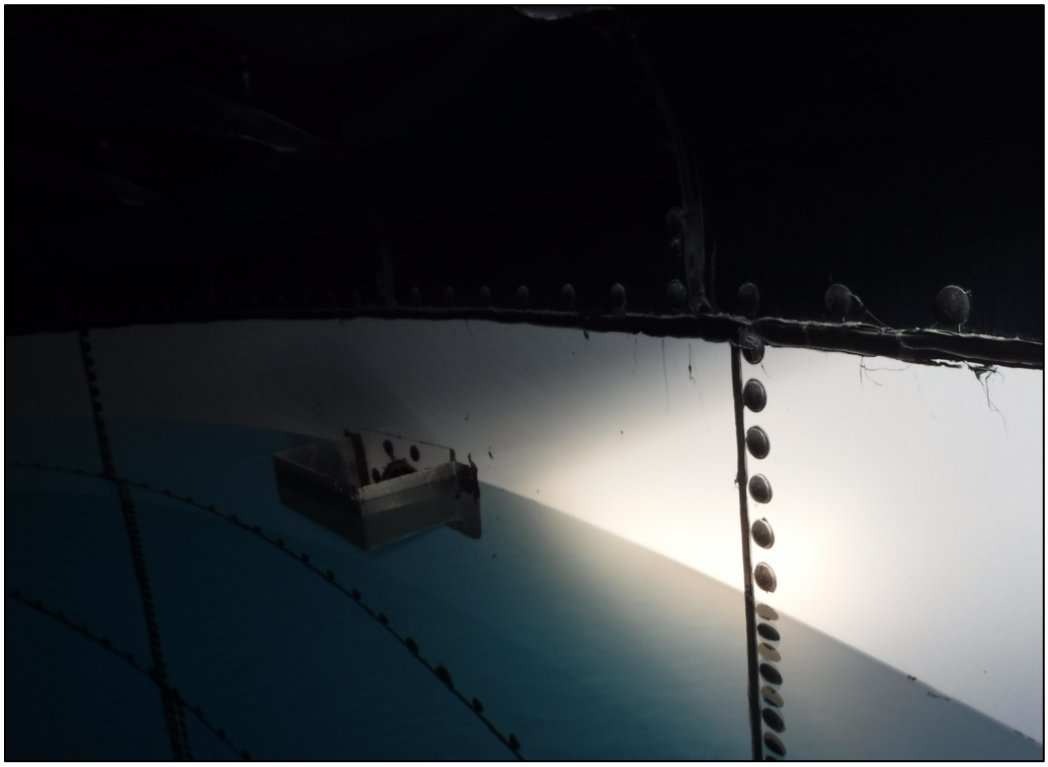

Photograph 2. Public water supply tank water level on October 15, 2015, at 12:57 PM.

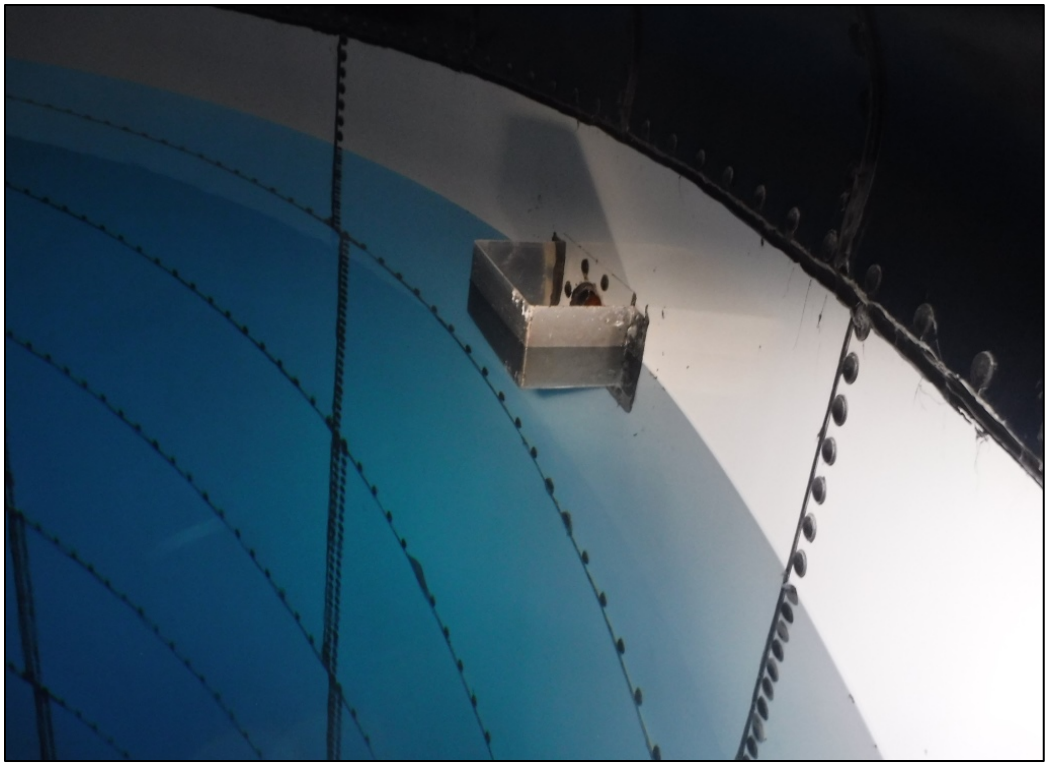

Photograph 3. Public water supply tank water level on October 26, 2015, at 1:34 PM.

Photograph 4. AquiStar PT2X transducer with vented cable and 0-1 PSI range.

FIGURES

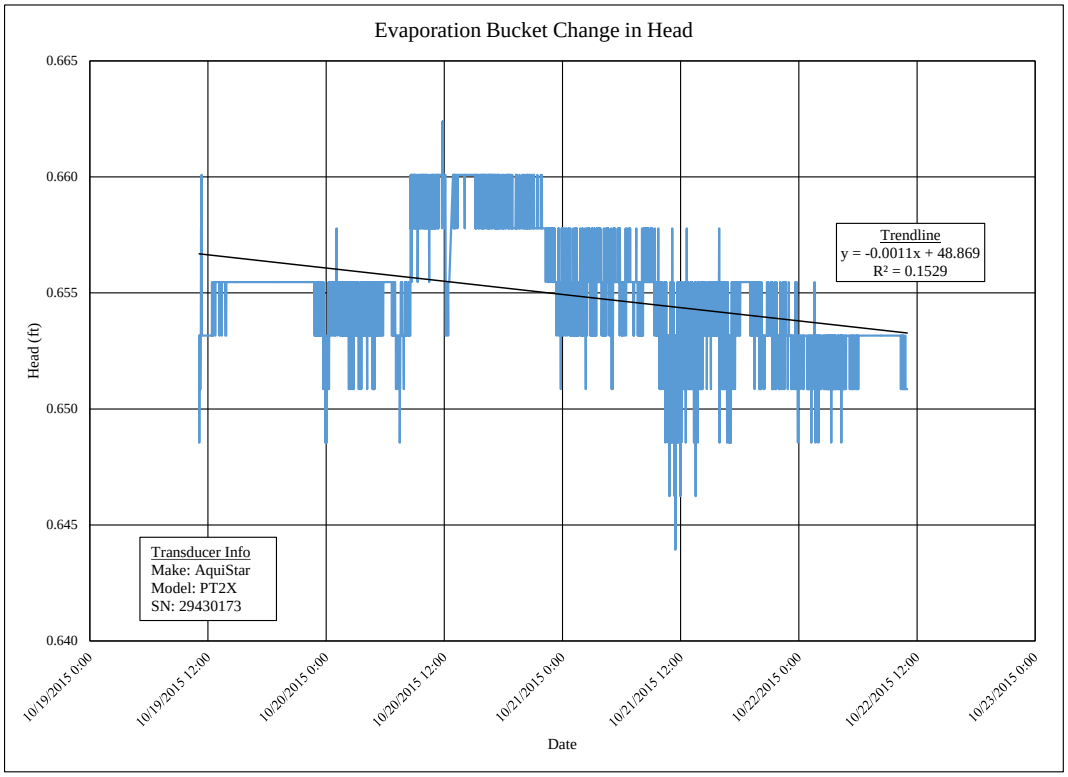

Figure 1. Evaporation Bucket Change in Head.

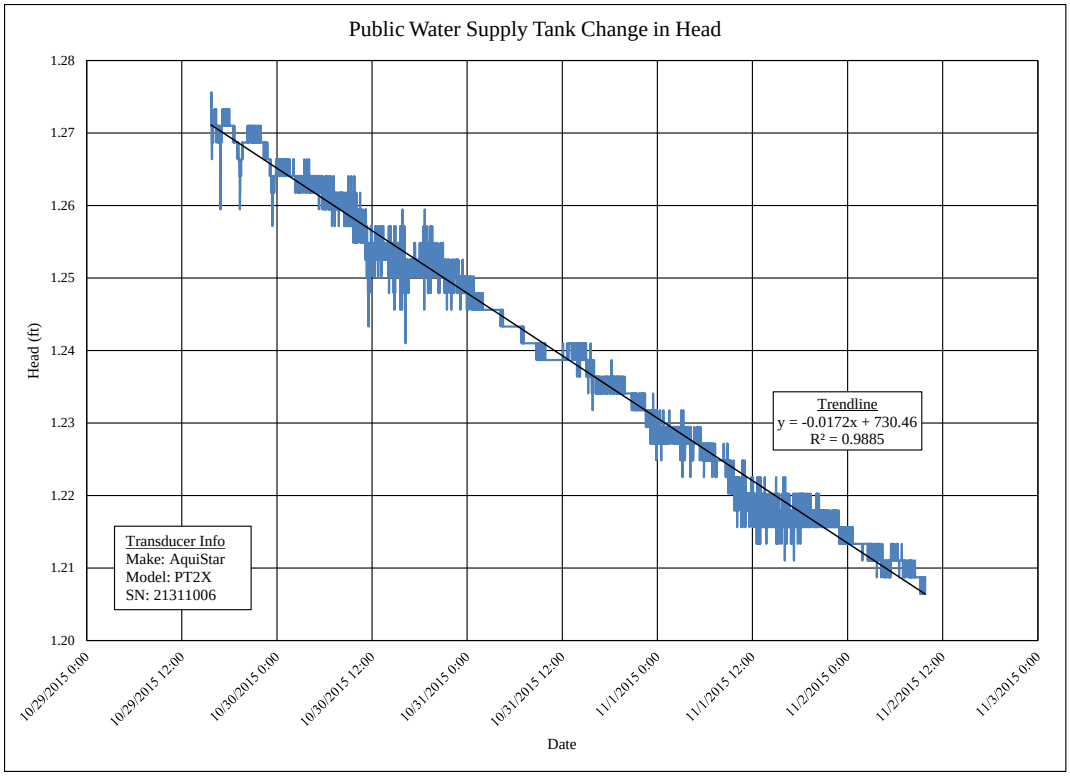

Figure 2. Public Water Supply Tank Change in Head.

ATTACHMENT A

Data Collected and Regression Statistics Provided on a CD.

APPENDIX B-7

AS-RECORDED

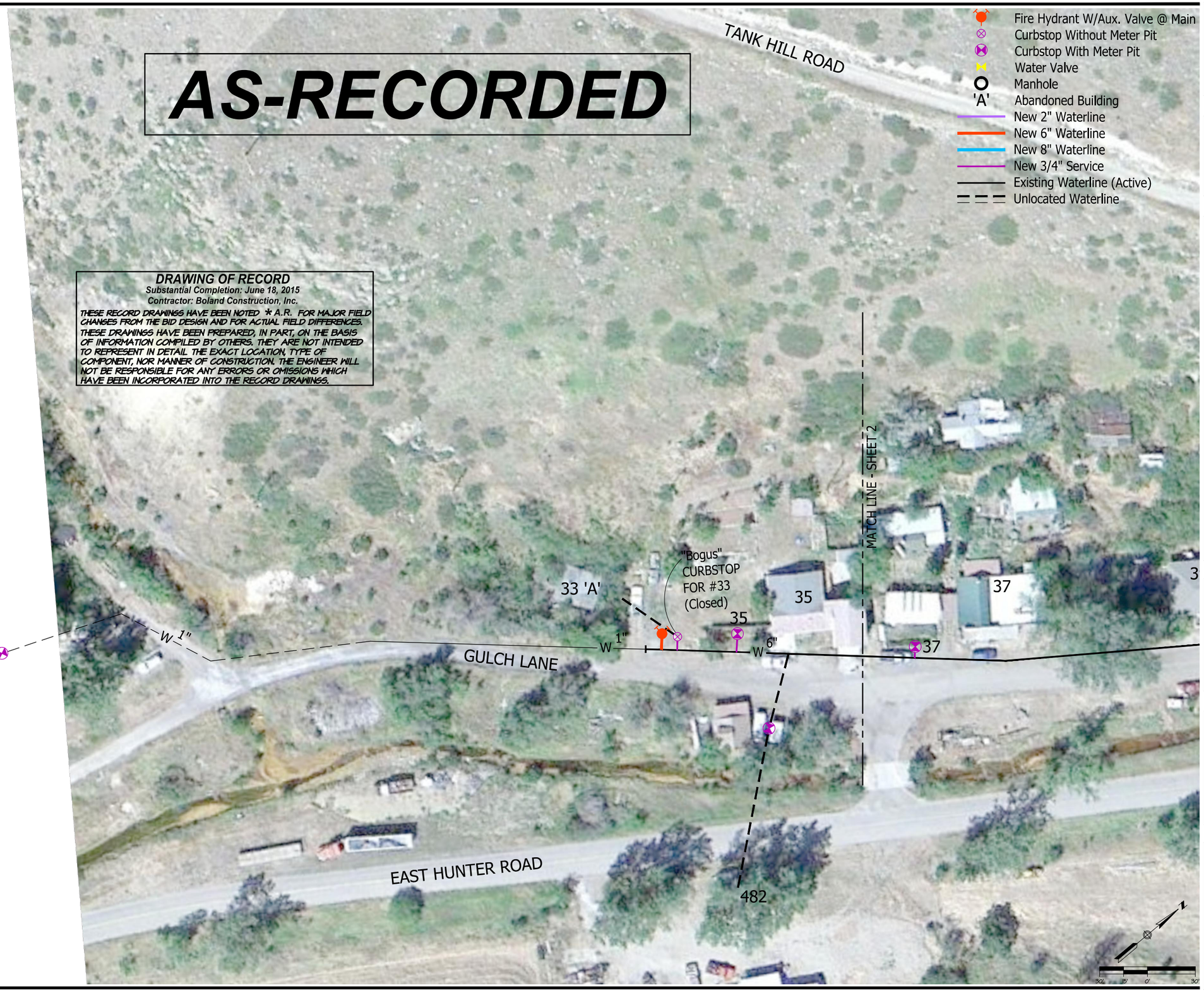

DRAWING OF RECORD
Substantial Completion: June 18, 2015
Contractor: Boland Construction, Inc.

THESE RECORD DRAWINGS HAVE BEEN NOTED * A.R. FOR MAJOR FIELD CHANGES FROM THE BID DESIGN AND FOR ACTUAL FIELD DIFFERENCES. THESE DRAWINGS HAVE BEEN PREPARED, IN PART, ON THE BASIS OF INFORMATION COMPILED BY OTHERS. THEY ARE NOT INTENDED TO REPRESENT IN DETAIL THE EXACT LOCATION, TYPE OF COMPONENT, NOR MANNER OF CONSTRUCTION. THE ENGINEER WILL NOT BE RESPONSIBLE FOR ANY ERRORS OR OMISSIONS WHICH HAVE BEEN INCORPORATED INTO THE RECORD DRAWINGS.

- Fire Hydrant W/Aux. Valve @ Main
- Curbstop Without Meter Pit
- Curbstop With Meter Pit
- Water Valve
- Manhole
- 'A' Abandoned Building
- New 2" Waterline
- New 6" Waterline
- New 8" Waterline
- New 3/4" Service
- Existing Waterline (Active)
- Unlocated Waterline

Revisions	By	Date
AS-RECORDED	KF	7/2015

File No.	Job No.
43.109	1207 1207–AsbWtr
Date	**Scale**
9/2/15	AS SHOWN

Professional Seal

MONTANA
John A. Nell
4682 E
REGISTERED PROFESSIONAL ENGINEER

Engineers
Environmental Specialists
Planners
Designers
Surveyors

NCI Engineering

4509 North Star Boulevard
P.O. Box 6350
Great Falls, MT 59406
Phone 406-453-5478
Fax 406-453-2009

Owner

SAND COULEE WATER DISTRICT

Project Title

SAND COULEE WATER IMPROVEMENTS 2014

Sheet Title

AS-RECORDED WATER MAIN / SERVICES

Sheet	Of
1	8

Copyright © 2015 NCI, All Rights Reserved

File # FILE #

DRAWING OF RECORD
Substantial Completion: June 18, 2015
Contractor: Boland Construction, Inc.

THESE RECORD DRAWINGS HAVE BEEN NOTED * A.R. FOR MAJOR FIELD CHANGES FROM THE BID DESIGN AND FOR ACTUAL FIELD DIFFERENCES. THESE DRAWINGS HAVE BEEN PREPARED, IN PART, ON THE BASIS OF INFORMATION COMPILED BY OTHERS. THEY ARE NOT INTENDED TO REPRESENT IN DETAIL THE EXACT LOCATION, TYPE OF COMPONENT, NOR MANNER OF CONSTRUCTION. THE ENGINEER WILL NOT BE RESPONSIBLE FOR ANY ERRORS OR OMISSIONS WHICH HAVE BEEN INCORPORATED INTO THE RECORD DRAWINGS.

Revisions	By	Date
AS-RECORDED	KF	7/2015

File No.	Job No.
43.109	1207 1207–AsbWtr
Date	Scale
9/2/15	AS SHOWN

Professional Seal

MONTANA
John A. Nell
4682 E
REGISTERED PROFESSIONAL ENGINEER

Engineers
Environmental Specialists
Planners
Designers
Surveyors

NCI Engineering

4509 North Star Boulevard
P.O. Box 6350
Great Falls, MT 59406
Phone 406-453-5478
Fax 406-453-2009

Owner

SAND COULEE WATER DISTRICT

Project Title

SAND COULEE WATER IMPROVEMENTS 2014

Sheet Title

AS-RECORDED WATER MAIN / SERVICES

Sheet	Of
2	8

Copyright © 2015 NCI, All Rights Reserved

File # FILE #

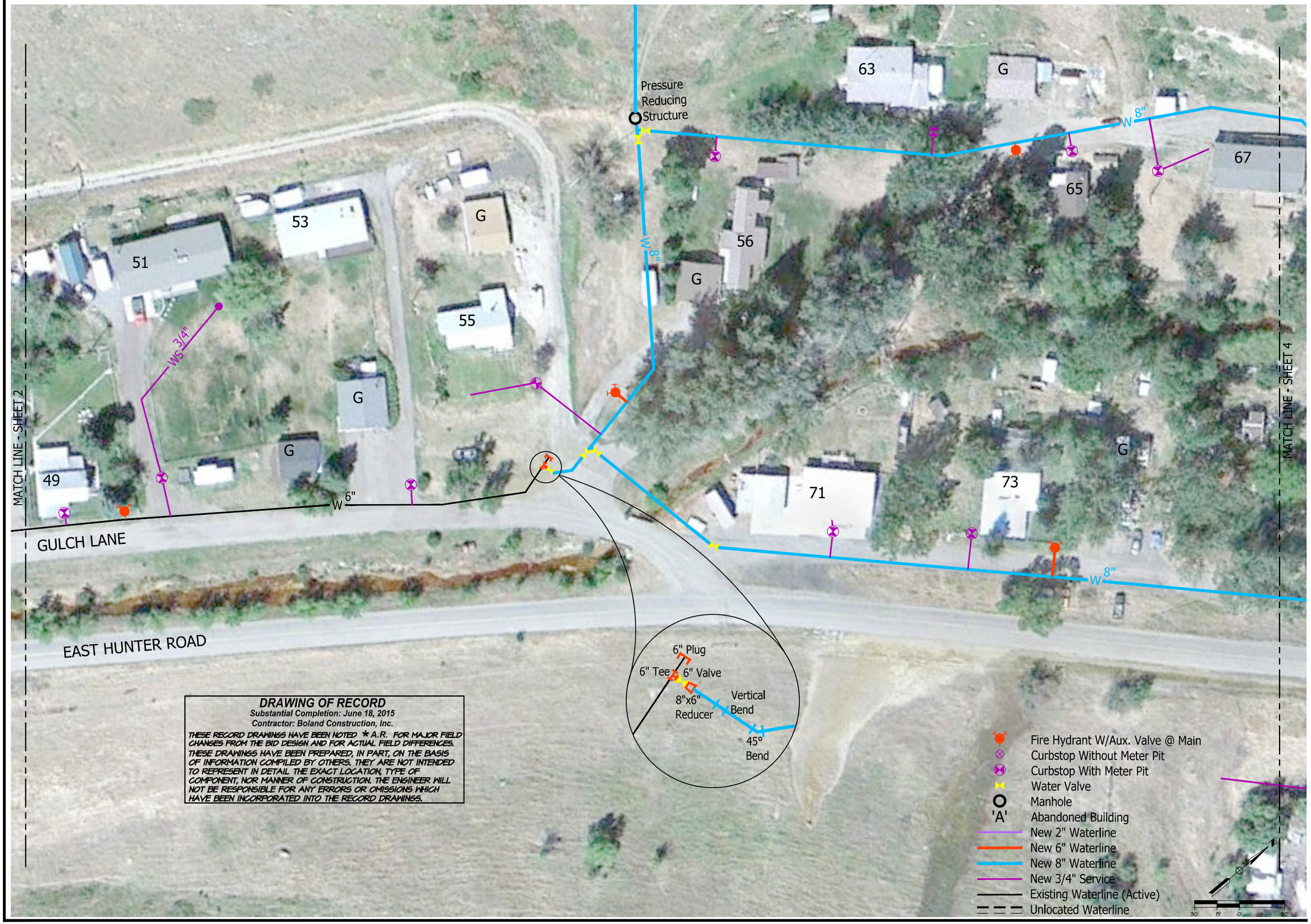

DRAWING OF RECORD

Substantial Completion: June 18, 2015
Contractor: Boland Construction, Inc.

THESE RECORD DRAWINGS HAVE BEEN NOTED * A.R. FOR MAJOR FIELD CHANGES FROM THE BID DESIGN AND FOR ACTUAL FIELD DIFFERENCES. THESE DRAWINGS HAVE BEEN PREPARED, IN PART, ON THE BASIS OF INFORMATION COMPILED BY OTHERS. THEY ARE NOT INTENDED TO REPRESENT IN DETAIL THE EXACT LOCATION, TYPE OF COMPONENT, NOR MANNER OF CONSTRUCTION. THE ENGINEER WILL NOT BE RESPONSIBLE FOR ANY ERRORS OR OMISSIONS WHICH HAVE BEEN INCORPORATED INTO THE RECORD DRAWINGS.

Revisions	By	Date
AS-RECORDED	KF	7/2015

File No.	Job No.
43.109	1207 1207–AsbWtr
Date	**Scale**
9/2/15	AS SHOWN

Professional Seal

MONTANA
4682 E
REGISTERED PROFESSIONAL ENGINEER

Engineers
Environmental Specialists
Planners
Designers
Surveyors

NCI Engineering

4509 North Star Boulevard
P.O. Box 6350
Great Falls, MT 59406
Phone 406-453-5478
Fax 406-453-2009

Owner

SAND COULEE WATER DISTRICT

Project Title

SAND COULEE WATER IMPROVEMENTS 2014

Sheet Title

AS-RECORDED WATER MAIN / SERVICES

Sheet	Of
3	8

Copyright © 2015 NCI, All Rights Reserved

File # FILE #

DRAWING OF RECORD
Substantial Completion: June 18, 2015
Contractor: Boland Construction, Inc.

THESE RECORD DRAWINGS HAVE BEEN NOTED * A.R. FOR MAJOR FIELD CHANGES FROM THE BID DESIGN AND FOR ACTUAL FIELD DIFFERENCES. THESE DRAWINGS HAVE BEEN PREPARED, IN PART, ON THE BASIS OF INFORMATION COMPILED BY OTHERS. THEY ARE NOT INTENDED TO REPRESENT IN DETAIL THE EXACT LOCATION, TYPE OF COMPONENT, NOR MANNER OF CONSTRUCTION. THE ENGINEER WILL NOT BE RESPONSIBLE FOR ANY ERRORS OR OMISSIONS WHICH HAVE BEEN INCORPORATED INTO THE RECORD DRAWINGS.

- Fire Hydrant W/Aux. Valve @ Main
- Curbstop Without Meter Pit
- Curbstop With Meter Pit
- Water Valve
- Manhole
- 'A' Abandoned Building
- New 2" Waterline
- New 6" Waterline
- New 8" Waterline
- New 3/4" Service
- Existing Waterline (Active)
- Unlocated Waterline

MATCH LINE - SHEET 3

G

W 8"

G

79

77

531

GULCH LANE

2 curbstops and
2 meterpits

MATCH LINE - SHEET 5

537

EAST HUNTER ROAD

W 8"

Cattle water
service

2 curbstops and
2 meterpits

516

MATCH LINE - SHEET 5

EAST HUNTER ROAD

525

W 6"

EAST HUNTER ROAD

Revisions	By	Date
AS-RECORDED	KF	7/2015

File No.	Job No.
43.109	1207 1207–AsbWtr
Date	Scale
9/2/15	AS SHOWN

Professional Seal

MONTANA
John A. Nell
4682 E
REGISTERED PROFESSIONAL ENGINEER

Engineers
Environmental Specialists
Planners
Designers
Surveyors

NCI Engineering

4509 North Star Boulevard
P.O. Box 6350
Great Falls, MT 59406
Phone 406-453-5478
Fax 406-453-2009

Owner

SAND COULEE WATER DISTRICT

Project Title

SAND COULEE WATER IMPROVEMENTS
2014

Sheet Title

AS-RECORDED WATER MAIN / SERVICES

Sheet	Of
4	8

Copyright © 2015 NCI, All Rights Reserved

File # FILE #

DRAWING OF RECORD
Substantial Completion: June 18, 2015
Contractor: Boland Construction, Inc.

THESE RECORD DRAWINGS HAVE BEEN NOTED * A.R. FOR MAJOR FIELD CHANGES FROM THE BID DESIGN AND FOR ACTUAL FIELD DIFFERENCES. THESE DRAWINGS HAVE BEEN PREPARED, IN PART, ON THE BASIS OF INFORMATION COMPILED BY OTHERS. THEY ARE NOT INTENDED TO REPRESENT IN DETAIL THE EXACT LOCATION, TYPE OF COMPONENT, NOR MANNER OF CONSTRUCTION. THE ENGINEER WILL NOT BE RESPONSIBLE FOR ANY ERRORS OR OMISSIONS WHICH HAVE BEEN INCORPORATED INTO THE RECORD DRAWINGS.

Revisions	By	Date
AS-RECORDED	KF	7/2015

File No.	Job No.
43.109	1207 1207–AsbWtr
Date	Scale
9/2/15	AS SHOWN

Professional Seal
MONTANA
4682 E
REGISTERED PROFESSIONAL ENGINEER

Engineers
Environmental Specialists
Planners
Designers
Surveyors
NCI Engineering
4509 North Star Boulevard
P.O. Box 6350
Great Falls, MT 59406
Phone 406-453-5478
Fax 406-453-2009

Owner
SAND COULEE WATER DISTRICT

Project Title
SAND COULEE WATER IMPROVEMENTS
2014

Sheet Title
AS-RECORDED WATER MAIN / SERVICES

Sheet	Of
5	8

Copyright © 2015 NCI, All Rights Reserved
File # FILE #

DRAWING OF RECORD
Substantial Completion: June 18, 2015
Contractor: Boland Construction, Inc.

THESE RECORD DRAWINGS HAVE BEEN NOTED * A.R. FOR MAJOR FIELD CHANGES FROM THE BID DESIGN AND FOR ACTUAL FIELD DIFFERENCES. THESE DRAWINGS HAVE BEEN PREPARED, IN PART, ON THE BASIS OF INFORMATION COMPILED BY OTHERS. THEY ARE NOT INTENDED TO REPRESENT IN DETAIL THE EXACT LOCATION, TYPE OF COMPONENT, NOR MANNER OF CONSTRUCTION. THE ENGINEER WILL NOT BE RESPONSIBLE FOR ANY ERRORS OR OMISSIONS WHICH HAVE BEEN INCORPORATED INTO THE RECORD DRAWINGS.

- Fire Hydrant W/Aux. Valve @ Main
- Curbstop Without Meter Pit
- Curbstop With Meter Pit
- Water Valve
- Manhole
- 'A' Abandoned Building
- New 2" Waterline
- New 6" Waterline
- New 8" Waterline
- New 3/4" Service
- Existing Waterline (Active)
- Unlocated Waterline

G
MATCH LINE - SHEET 4
528
ROSIE'S LANE
Dusko 'A'
W 6"
W 8"
Sand Coulee Bar
532 'A'
'A'
95
85
Service for this structure
MINER'S LANE
POST OFFICE
538
542
540
Future Service
CITY PARK
115
MATCH LINE - SHEET 8
40
MATCH LINE - SHEET 7
DAHN'S LANE
70
80
90
100
110
120
50
T

Revisions	By	Date
AS-RECORDED	KF	7/2015

File No.	Job No.
43.109	1207 1207–AsbWtr
Date	Scale
9/2/15	AS SHOWN

Professional Seal
MONTANA
John A. Nell
4682 E
REGISTERED PROFESSIONAL ENGINEER

Engineers
Environmental Specialists
Planners
Designers
Surveyors
NCI Engineering
4509 North Star Boulevard
P.O. Box 6350
Great Falls, MT 59406
Phone 406-453-5478
Fax 406-453-2009

Owner
SAND COULEE WATER DISTRICT

Project Title
SAND COULEE WATER IMPROVEMENTS 2014

Sheet Title
AS-RECORDED WATER MAIN / SERVICES

Sheet	Of
6	8

Copyright © 2015 NCI, All Rights Reserved
File # FILE #

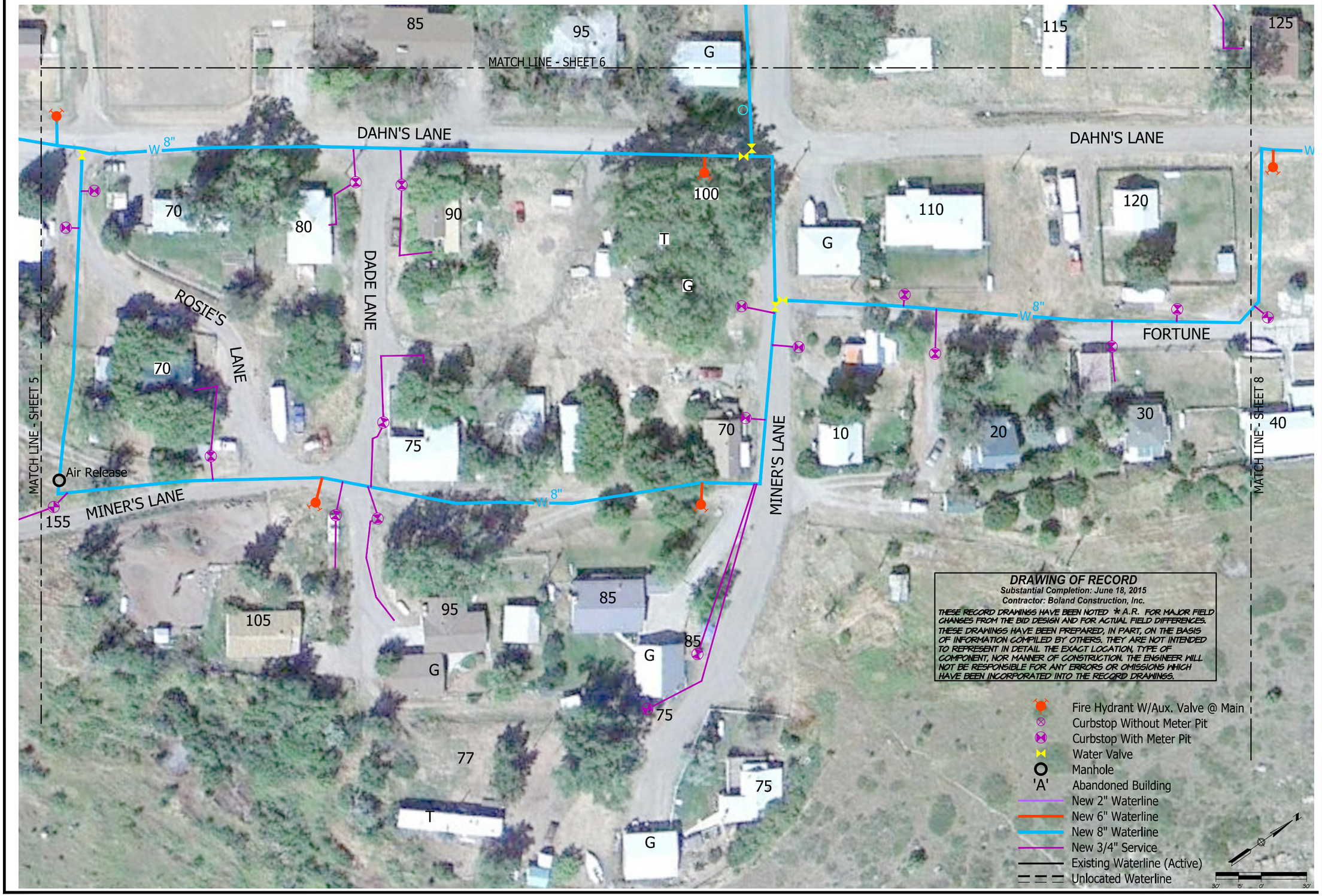

Revisions	By	Date
AS-RECORDED	KF	7/2015

File No.	Job No.
43.109	1207 1207-AsbWtr
Date	Scale
9/2/15	AS SHOWN

Professional Seal

MONTANA
John A. Nell
4682 E
REGISTERED PROFESSIONAL ENGINEER

Engineers
Environmental Specialists
Planners
Designers
Surveyors

NCI Engineering

4509 North Star Boulevard
P.O. Box 6350
Great Falls, MT 59406
Phone 406-453-5478
Fax 406-453-2009

Owner

SAND COULEE WATER DISTRICT

Project Title

SAND COULEE WATER IMPROVEMENTS 2014

Sheet Title

AS-RECORDED WATER MAIN / SERVICES

Sheet	Of
7	8

Copyright © 2015 NCI, All Rights Reserved

File # FILE #

EAST HUNTER ROAD

DAHN'S LANE

DAHN'S LANE

FORTUNE LANE

MATCH LINE - SHEET 6

MATCH LINE - SHEET 7

542 544 546 548 550 552 554 556 558 560

125 135 145 155 165 195

150 160 170 180

40 70 160

W 6" W 6" W 8" W 8" W 8" W 8"

Future Service

Future Service

3 curbstops and 3 meterpits

Future

G

Fire Hydrant W/Aux. Valve @ Main
Curbstop Without Meter Pit
Curbstop With Meter Pit
Water Valve
Manhole
'A' Abandoned Building
New 2" Waterline
New 6" Waterline
New 8" Waterline
New 3/4" Service
Existing Waterline (Active)
Unlocated Waterline

30' 15' 0' 30'

DRAWING OF RECORD

Substantial Completion: June 18, 2015
Contractor: Boland Construction, Inc.

THESE RECORD DRAWINGS HAVE BEEN NOTED * A.R. FOR MAJOR FIELD CHANGES FROM THE BID DESIGN AND FOR ACTUAL FIELD DIFFERENCES. THESE DRAWINGS HAVE BEEN PREPARED, IN PART, ON THE BASIS OF INFORMATION COMPILED BY OTHERS. THEY ARE NOT INTENDED TO REPRESENT IN DETAIL THE EXACT LOCATION, TYPE OF COMPONENT, NOR MANNER OF CONSTRUCTION. THE ENGINEER WILL NOT BE RESPONSIBLE FOR ANY ERRORS OR OMISSIONS WHICH HAVE BEEN INCORPORATED INTO THE RECORD DRAWINGS.

Revisions	By	Date
AS-RECORDED	KF	7/2015

File No.	Job No.
43.109	1207 1207–AsbWtr
Date	Scale
9/2/15	AS SHOWN

Professional Seal

MONTANA
4682 E
REGISTERED PROFESSIONAL ENGINEER

Engineers
Environmental Specialists
Planners
Designers
Surveyors

NCI Engineering

4509 North Star Boulevard
P.O. Box 6350
Great Falls, MT 59406
Phone 406-453-5478
Fax 406-453-2009

Owner

SAND COULEE WATER DISTRICT

Project Title

SAND COULEE WATER IMPROVEMENTS 2014

Sheet Title

AS-RECORDED WATER MAIN / SERVICES

Sheet	Of
8	8

Copyright © 2015 NCI, All Rights Reserved

File # FILE #

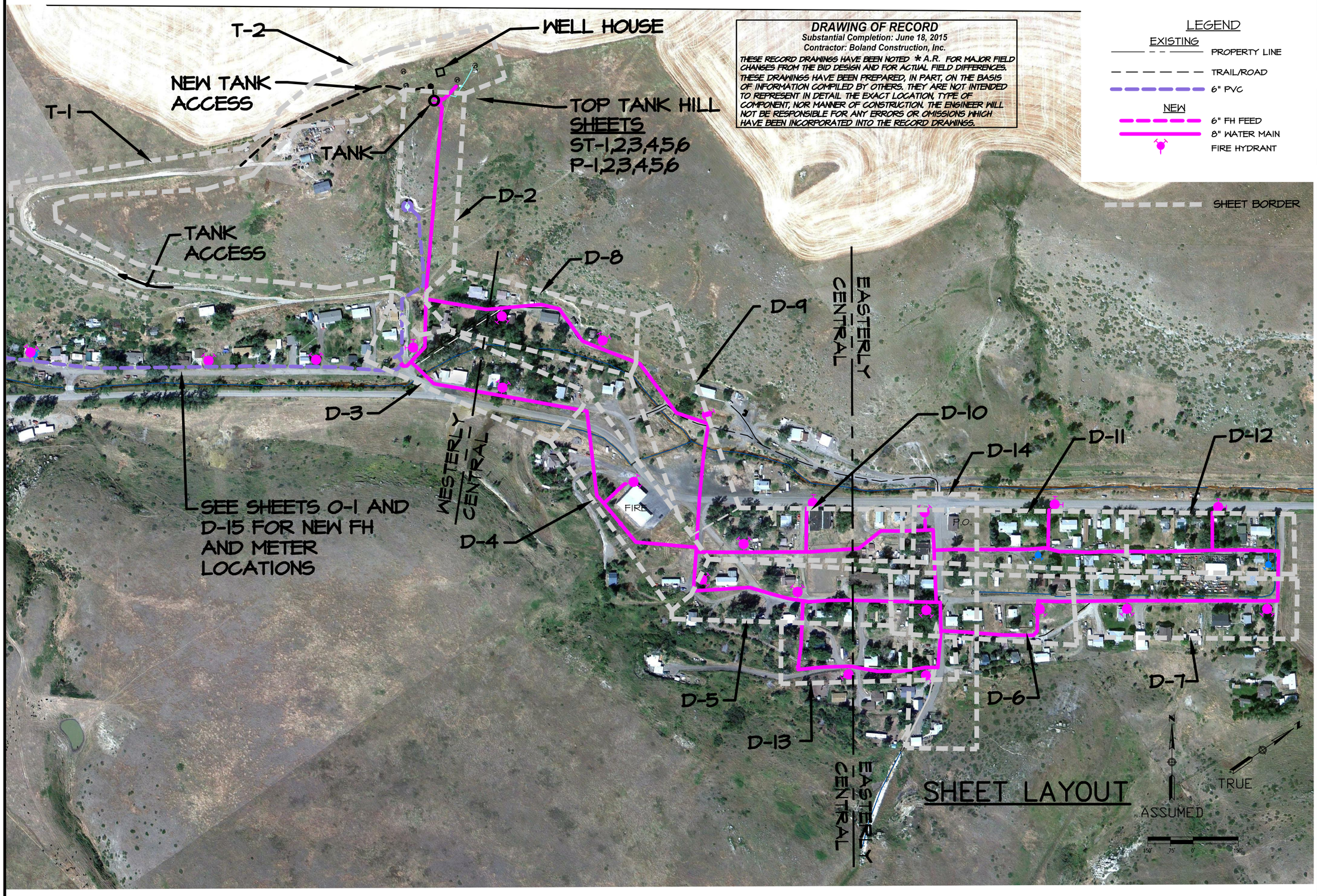

DRAWING OF RECORD
Substantial Completion: June 18, 2015
Contractor: Boland Construction, Inc.
THESE RECORD DRAWINGS HAVE BEEN NOTED * A.R. FOR MAJOR FIELD CHANGES FROM THE BID DESIGN AND FOR ACTUAL FIELD DIFFERENCES. THESE DRAWINGS HAVE BEEN PREPARED, IN PART, ON THE BASIS OF INFORMATION COMPILED BY OTHERS. THEY ARE NOT INTENDED TO REPRESENT IN DETAIL THE EXACT LOCATION, TYPE OF COMPONENT, NOR MANNER OF CONSTRUCTION. THE ENGINEER WILL NOT BE RESPONSIBLE FOR ANY ERRORS OR OMISSIONS WHICH HAVE BEEN INCORPORATED INTO THE RECORD DRAWINGS.

LEGEND

EXISTING
- PROPERTY LINE
- TRAIL/ROAD
- 6" PVC

NEW
- 6" FH FEED
- 8" WATER MAIN
- FIRE HYDRANT

SHEET BORDER

Revisions	By	Date
AS-RECORDED	KF	7/2015

File No.	Job No.
43.109	1207 1207 D-1
Date	Scale
3/21/14	AS SHOWN

Professional Seal
MONTANA
John A. Neil
4682 E
REGISTERED PROFESSIONAL ENGINEER

Engineers
Environmental Specialists
Planners
Designers
Surveyors
NC Engineering
4509 North Star Boulevard
P.O. Box 6350
Great Falls, MT 59406
Phone 406-453-5478
Fax 406-453-2009

Owner
SAND COULEE WATER DISTRICT

Project Title
SAND COULEE WATER IMPROVEMENTS
2014

Sheet Title
DISTRIBUTION OVERALL WATER SHEET LAYOUT

Sheet	Of
D-1	38

Copyright © 2015 NCI, All Rights Reserved
File # FILE #

Revisions	By	Date
AS-RECORDED	KF	7/2015

File No.	Job No.
43.109	1207 1207 D-2
Date	Scale
3/21/14	AS SHOWN

Professional Seal

MONTANA
John A. Nell
4682 E
REGISTERED PROFESSIONAL ENGINEER

Engineers
Environmental Specialists
Planners
Designers
Surveyors

NCI Engineering

4509 North Star Boulevard
P.O. Box 6350
Great Falls, MT 59406
Phone 406-453-5478
Fax 406-453-2009

Owner

SAND COULEE WATER DISTRICT

Project Title

SAND COULEE WATER IMPROVEMENTS 2014

Sheet Title

DISTRIBUTION TANK HILL

Sheet	Of
D-2	38

Copyright © 2015 NCI, All Rights Reserved

File #

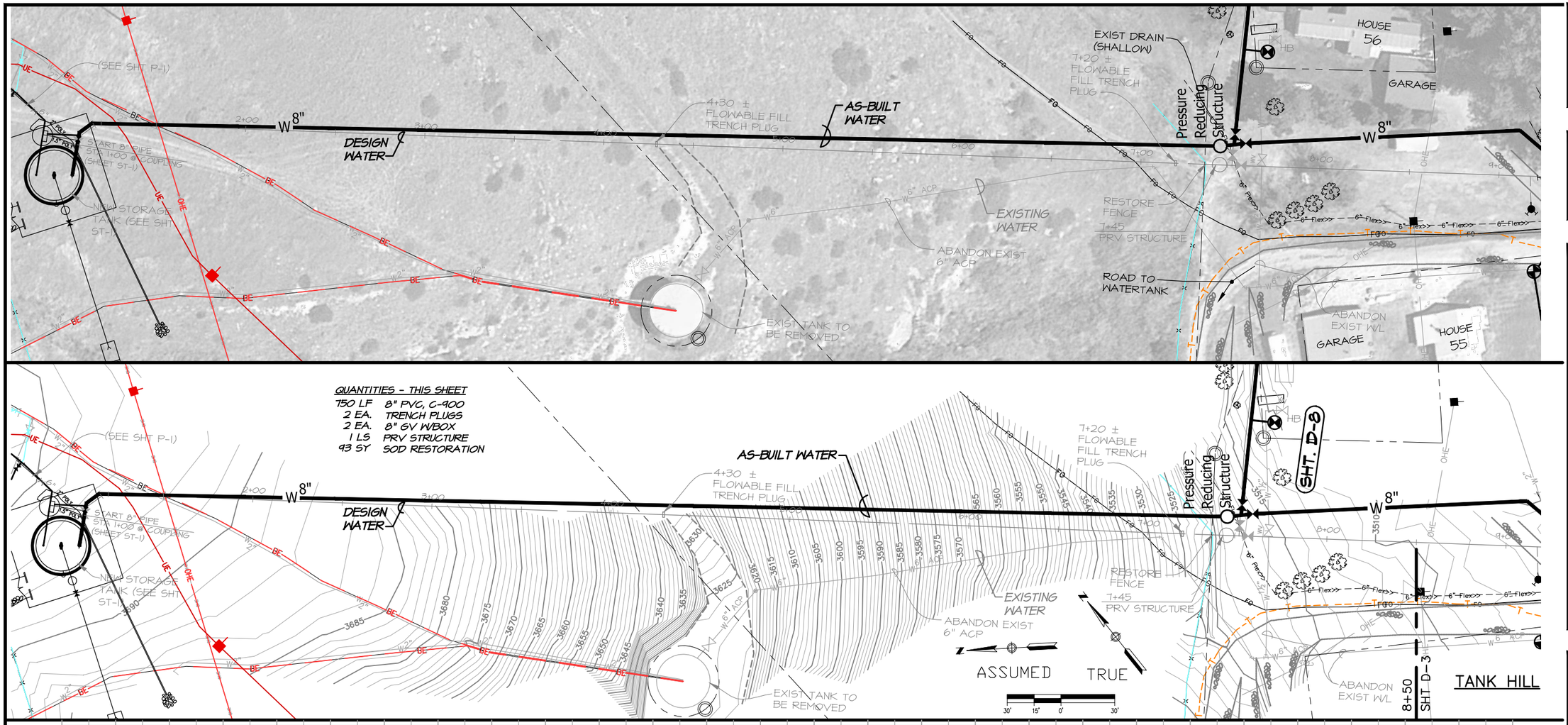

QUANTITIES - THIS SHEET

750 LF	8" PVC, C-900
2 EA.	TRENCH PLUGS
2 EA.	8" GV WBOX
1 LS	PRV STRUCTURE
93 SY	SOD RESTORATION

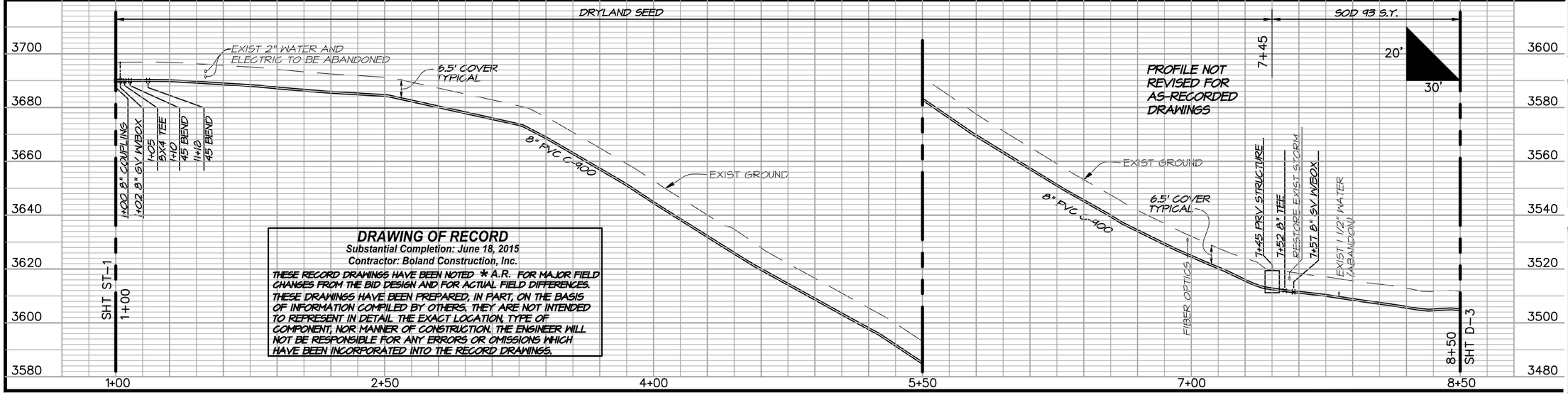

DRAWING OF RECORD
Substantial Completion: June 18, 2015
Contractor: Boland Construction, Inc.

THESE RECORD DRAWINGS HAVE BEEN NOTED * A.R. FOR MAJOR FIELD CHANGES FROM THE BID DESIGN AND FOR ACTUAL FIELD DIFFERENCES. THESE DRAWINGS HAVE BEEN PREPARED, IN PART, ON THE BASIS OF INFORMATION COMPILED BY OTHERS. THEY ARE NOT INTENDED TO REPRESENT IN DETAIL THE EXACT LOCATION, TYPE OF COMPONENT, NOR MANNER OF CONSTRUCTION. THE ENGINEER WILL NOT BE RESPONSIBLE FOR ANY ERRORS OR OMISSIONS WHICH HAVE BEEN INCORPORATED INTO THE RECORD DRAWINGS.

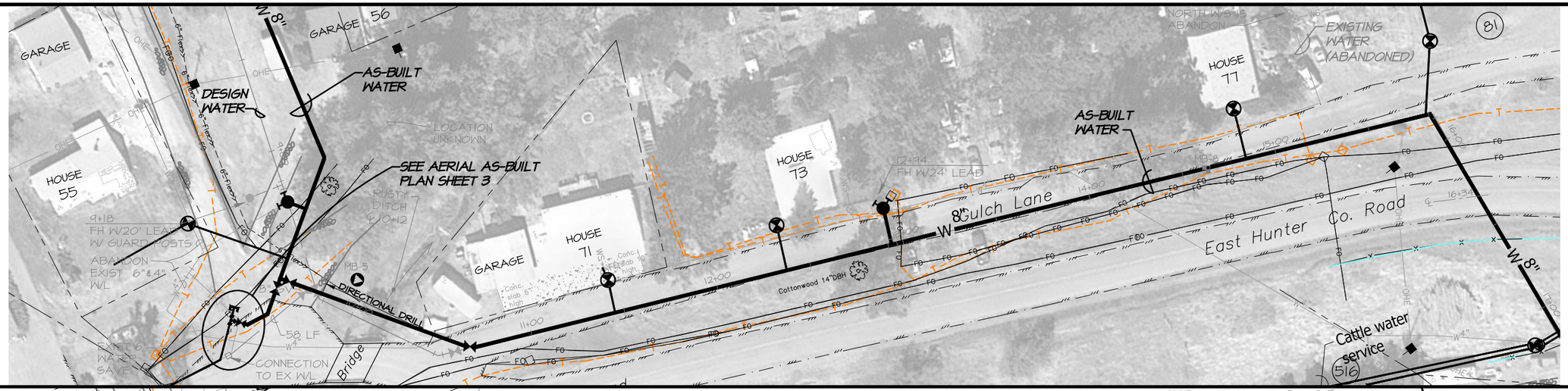

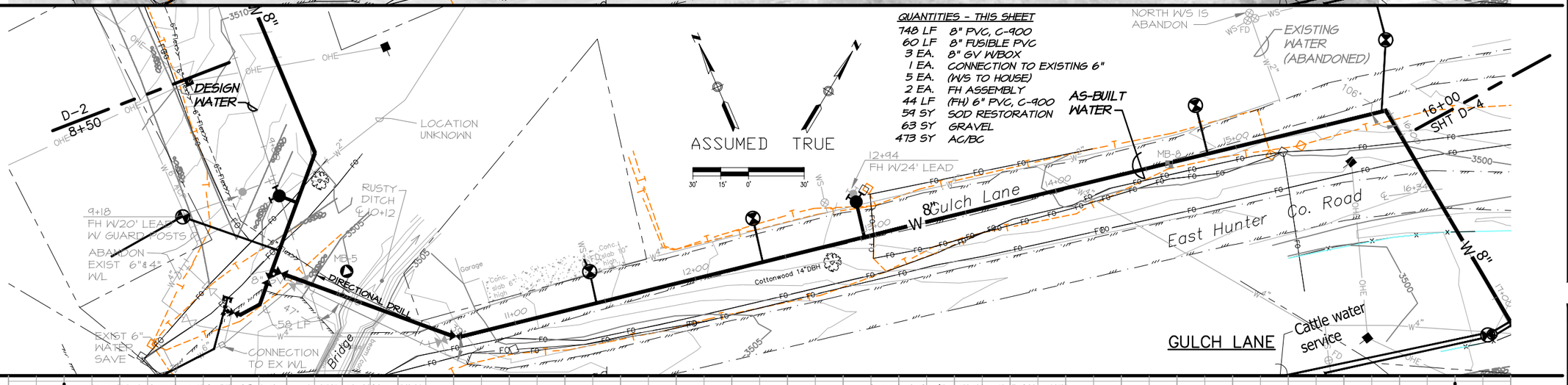

QUANTITIES - THIS SHEET

748 LF	8" PVC, C-900
60 LF	8" FUSIBLE PVC
3 EA.	8" GV W/BOX
1 EA.	CONNECTION TO EXISTING 6"
5 EA.	(WS TO HOUSE)
2 EA.	FH ASSEMBLY
44 LF	(FH) 6" PVC, C-900
59 SY	SOD RESTORATION
63 SY	GRAVEL
473 SY	AC/BC

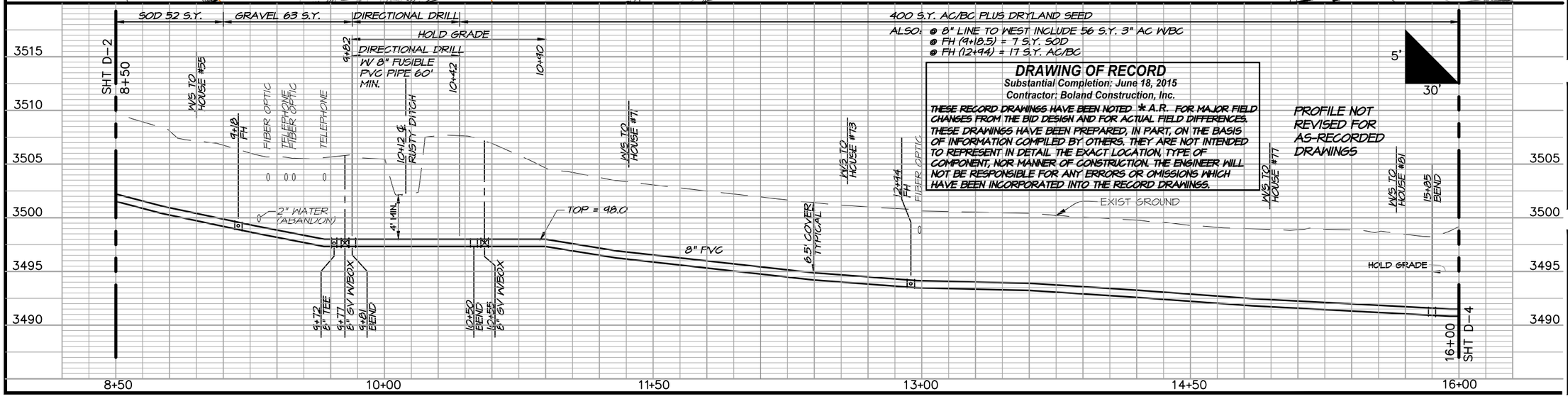

Revisions	By	Date
AS-RECORDED	KF	7/2015

File No.	Job No.
43.109	1207 1207 D-3
Date	Scale
3/21/14	AS SHOWN

Professional Seal

MONTANA
John A Neil
4682 E
REGISTERED PROFESSIONAL ENGINEER

Engineers
Environmental Specialists
Planners
Designers
Surveyors

NCI Engineering

4509 North Star Boulevard
P.O. Box 6350
Great Falls, MT 59406
Phone 406-453-5478
Fax 406-453-2009

Owner

SAND COULEE WATER DISTRICT

Project Title

SAND COULEE WATER IMPROVEMENTS 2014

Sheet Title

DISTRIBUTION GULCH LANE

Sheet	Of
D-3	38

Copyright © 2015 NCI, All Rights Reserved

File #

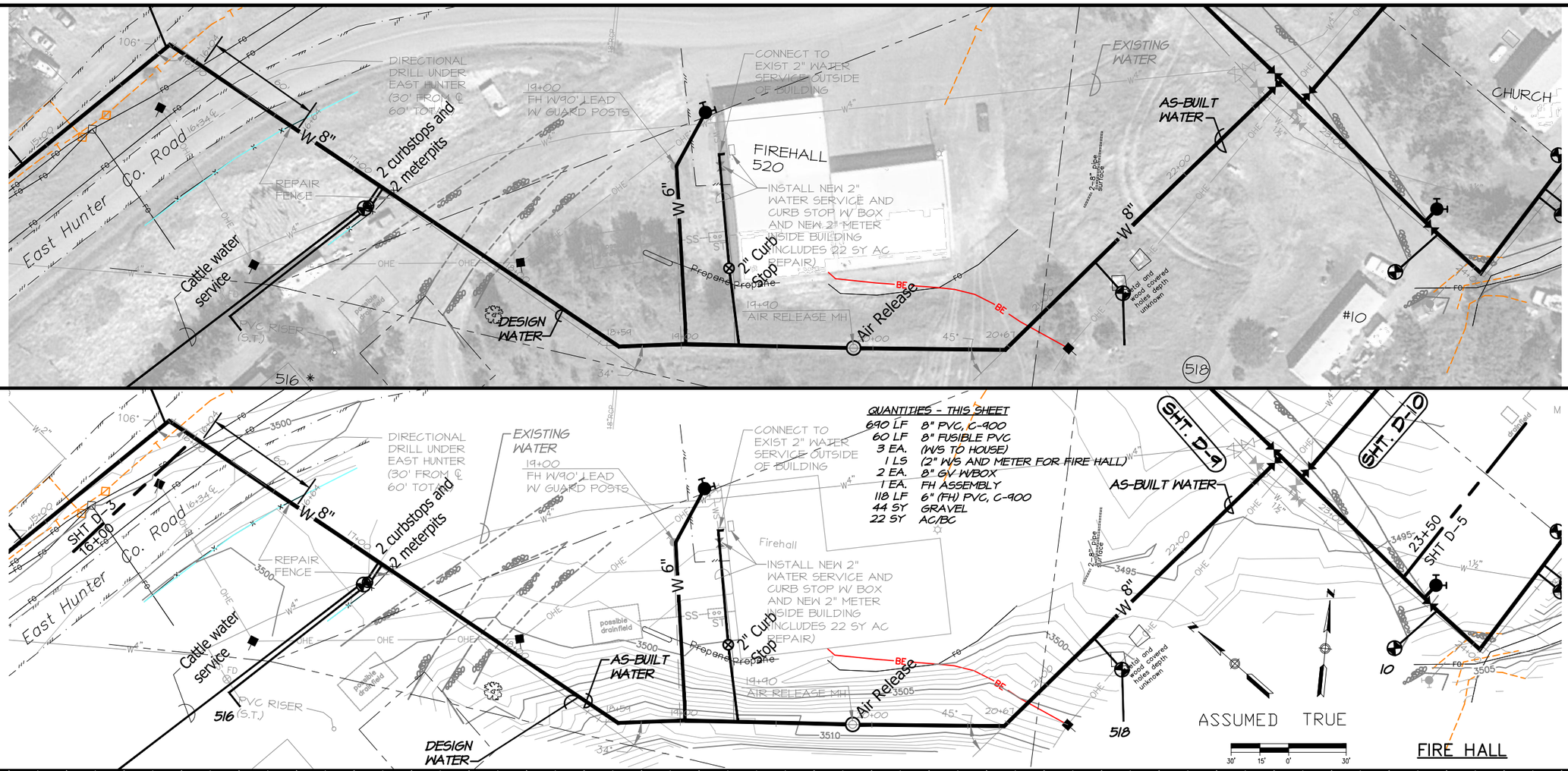

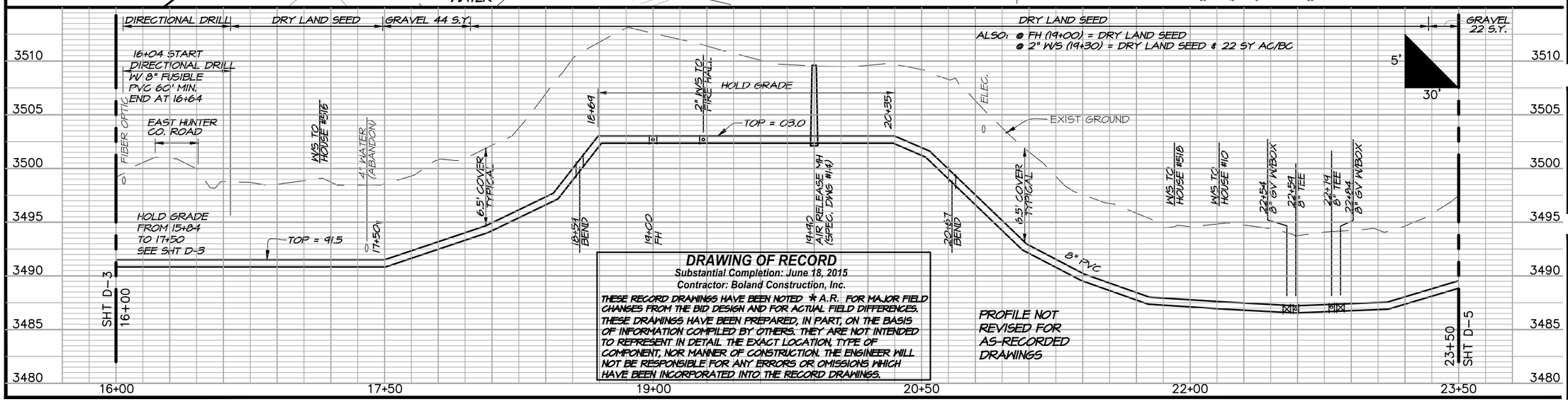

DRAWING OF RECORD
Substantial Completion: June 18, 2015
Contractor: Boland Construction, Inc.

THESE RECORD DRAWINGS HAVE BEEN NOTED * A.R. FOR MAJOR FIELD CHANGES FROM THE BID DESIGN AND FOR ACTUAL FIELD DIFFERENCES. THESE DRAWINGS HAVE BEEN PREPARED, IN PART, ON THE BASIS OF INFORMATION COMPILED BY OTHERS. THEY ARE NOT INTENDED TO REPRESENT IN DETAIL THE EXACT LOCATION, TYPE OF COMPONENT, NOR MANNER OF CONSTRUCTION. THE ENGINEER WILL NOT BE RESPONSIBLE FOR ANY ERRORS OR OMISSIONS WHICH HAVE BEEN INCORPORATED INTO THE RECORD DRAWINGS.

PROFILE NOT REVISED FOR AS-RECORDED DRAWINGS

QUANTITIES - THIS SHEET

690 LF	8" PVC, C-900
60 LF	8" FUSIBLE PVC
3 EA.	(W/S TO HOUSE)
1 LS	(2" W/S AND METER FOR FIRE HALL)
2 EA.	8" GV W/BOX
1 EA.	FH ASSEMBLY
118 LF	6" (FH) PVC, C-900
44 SY	GRAVEL
22 SY	AC/BC

Revisions	By	Date
AS-RECORDED	KF	7/2015

File No.	Job No.
43.109	1207 1207 D-4
Date: 3/21/14	Scale: AS SHOWN

Professional Seal
MONTANA
4682 E
REGISTERED PROFESSIONAL ENGINEER

Engineers
Environmental Specialists
Planners
Designers
Surveyors
NCI Engineering
4509 North Star Boulevard
P.O. Box 6350
Great Falls, MT 59406
Phone 406-453-5478
Fax 406-453-2009

Owner
SAND COULEE WATER DISTRICT

Project Title
SAND COULEE WATER IMPROVEMENTS 2014

Sheet Title
DISTRIBUTION FIRE HALL

Sheet	Of
D-4	38

Copyright © 2015 NCI, All Rights Reserved

File #

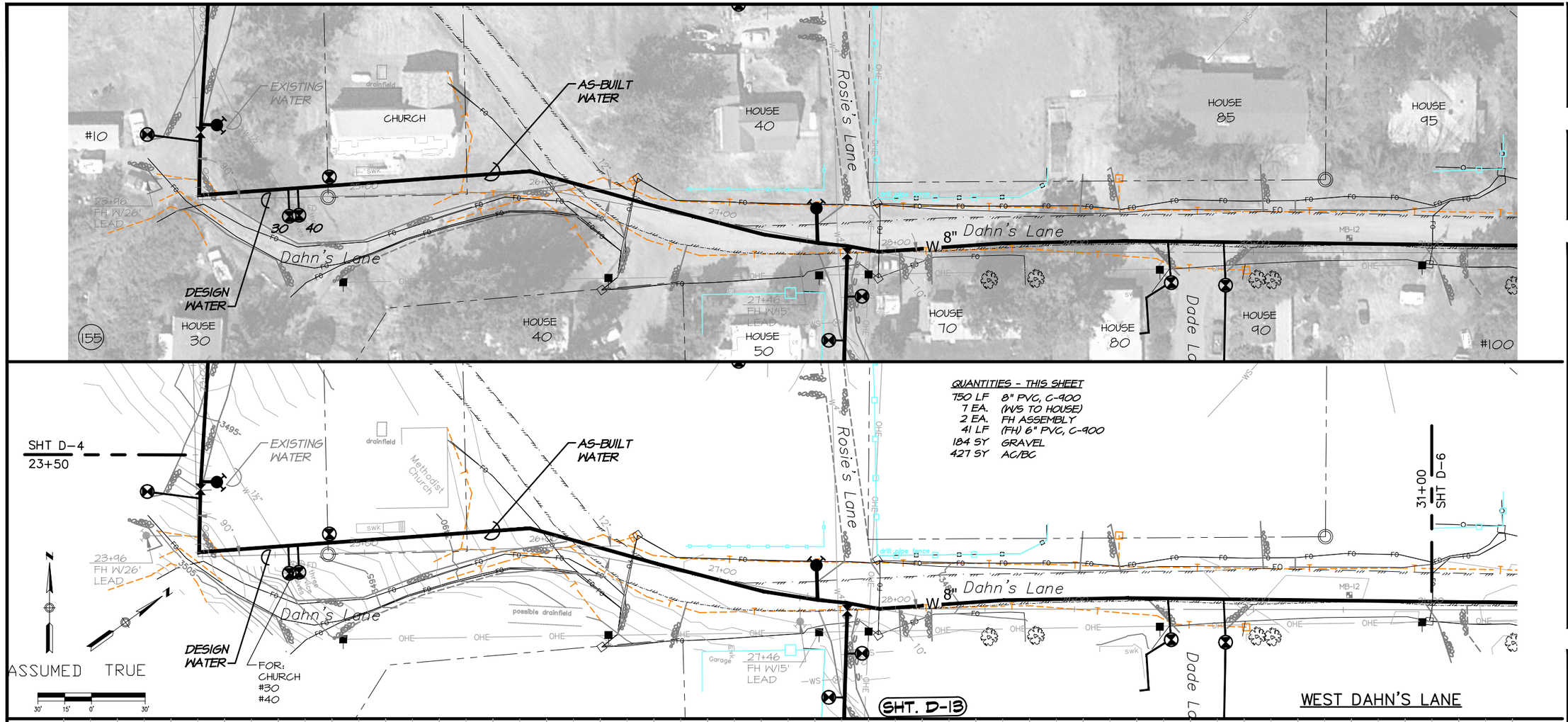

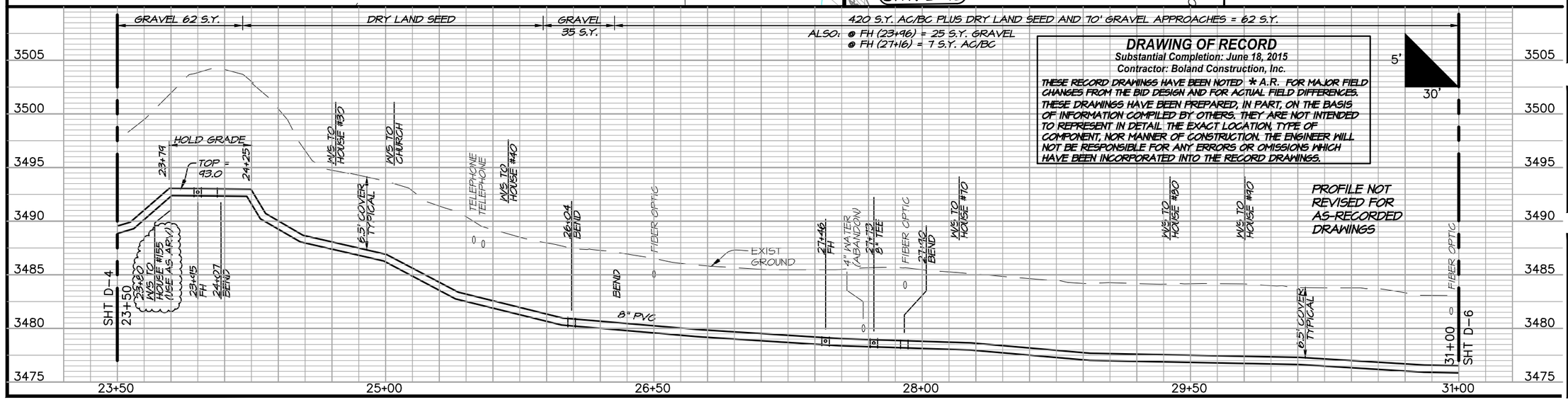

QUANTITIES - THIS SHEET

750 LF	8" PVC, C-900
7 EA.	(WS TO HOUSE)
2 EA.	FH ASSEMBLY
41 LF	(FH) 6" PVC, C-900
184 SY	GRAVEL
427 SY	AC/BC

420 S.Y. AC/BC PLUS DRY LAND SEED AND 10' GRAVEL APPROACHES = 62 S.Y.

ALSO: @ FH (23+96) = 25 S.Y. GRAVEL
@ FH (27+16) = 7 S.Y. AC/BC

DRAWING OF RECORD
Substantial Completion: June 18, 2015
Contractor: Boland Construction, Inc.

THESE RECORD DRAWINGS HAVE BEEN NOTED * A.R. FOR MAJOR FIELD CHANGES FROM THE BID DESIGN AND FOR ACTUAL FIELD DIFFERENCES. THESE DRAWINGS HAVE BEEN PREPARED, IN PART, ON THE BASIS OF INFORMATION COMPILED BY OTHERS. THEY ARE NOT INTENDED TO REPRESENT IN DETAIL THE EXACT LOCATION, TYPE OF COMPONENT, NOR MANNER OF CONSTRUCTION. THE ENGINEER WILL NOT BE RESPONSIBLE FOR ANY ERRORS OR OMISSIONS WHICH HAVE BEEN INCORPORATED INTO THE RECORD DRAWINGS.

PROFILE NOT REVISED FOR AS-RECORDED DRAWINGS

Revisions	By	Date
AS-RECORDED	KF	7/2015

File No.	Job No.
43.109	1207 1207 D-5
Date	Scale
3/21/14	AS SHOWN

Professional Seal
MONTANA
John C. Nagel
4682 E
REGISTERED PROFESSIONAL ENGINEER

Engineers
Environmental Specialists
Planners
Designers
Surveyors
NCI Engineering
4509 North Star Boulevard
P.O. Box 6350
Great Falls, MT 59406
Phone 406-453-5478
Fax 406-453-2009

Owner
SAND COULEE WATER DISTRICT

Project Title
SAND COULEE WATER IMPROVEMENTS 2014

Sheet Title
DISTRIBUTION
WEST DAHN'S LANE

Sheet	Of
D-5	38

Copyright © 2015 NCI, All Rights Reserved
File #

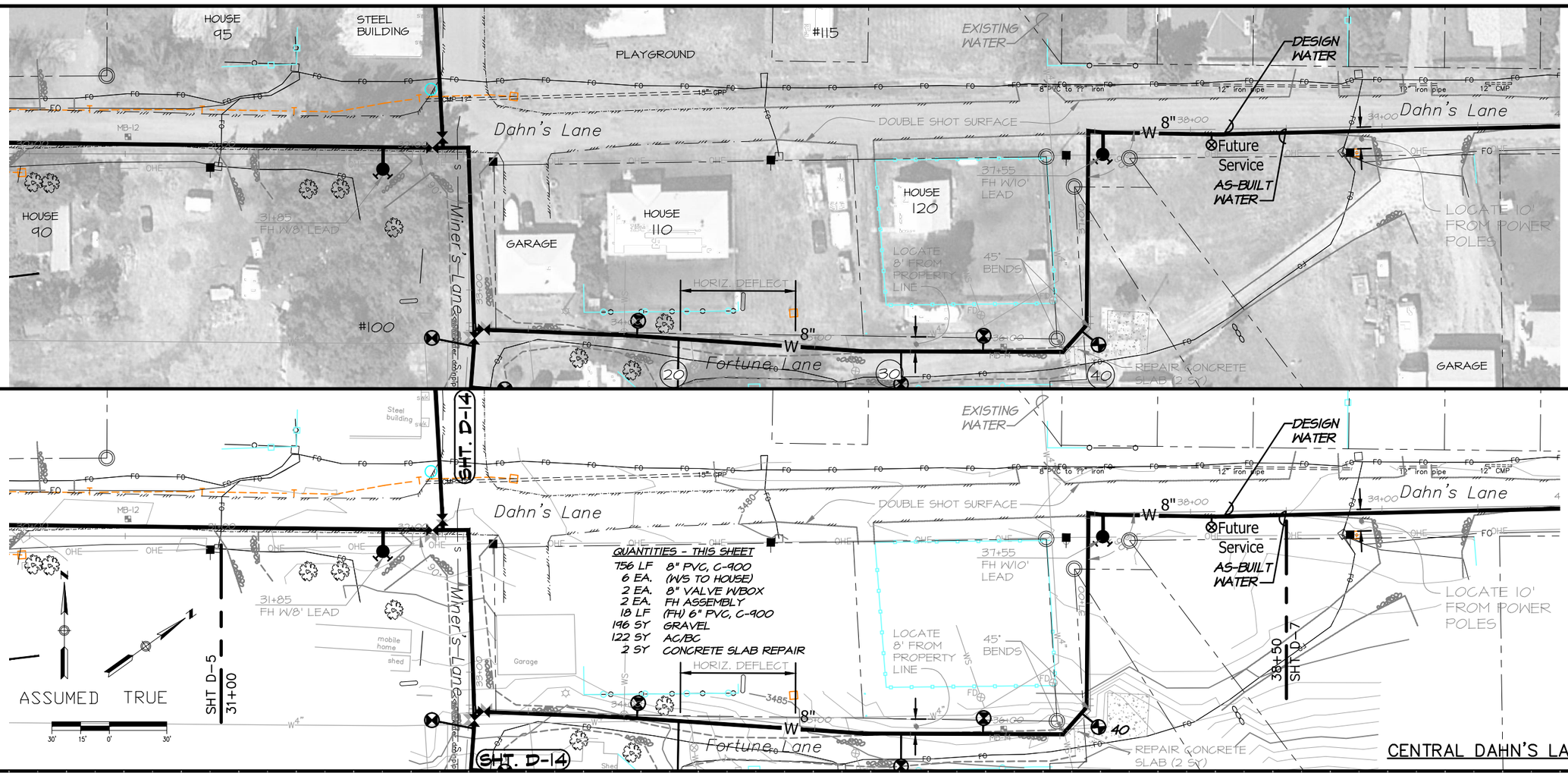

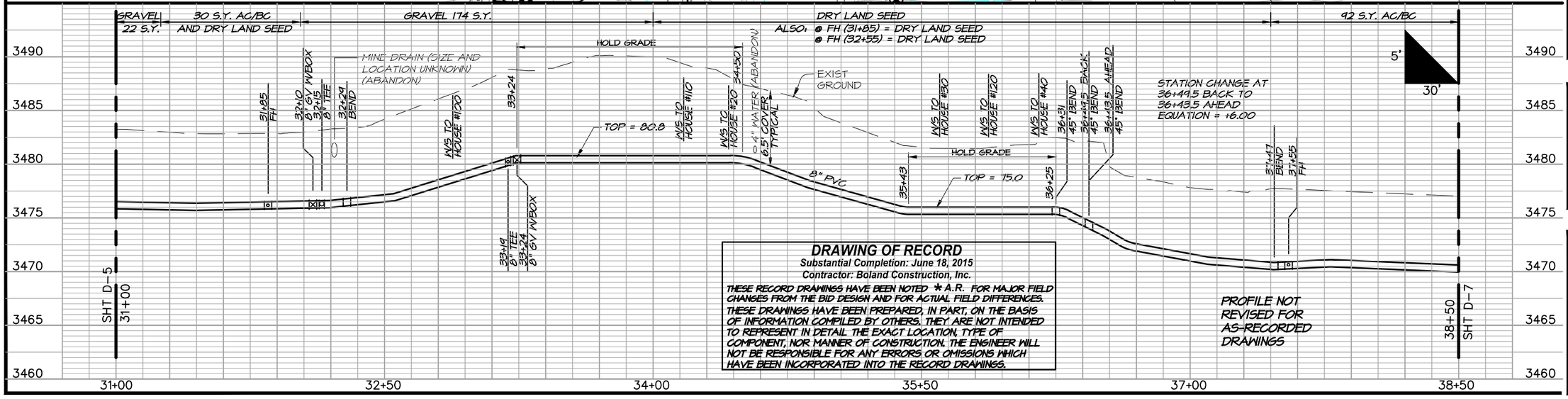

Revisions	By	Date
AS-RECORDED	KF	7/2015

File No.	Job No.
43.109	1207 1207 D-6
Date	Scale
3/21/14	AS SHOWN

Professional Seal

MONTANA
John A. Neil
4682 E
REGISTERED PROFESSIONAL ENGINEER

Engineers
Environmental Specialists
Planners
Designers
Surveyors

NCI Engineering

4509 North Star Boulevard
P.O. Box 6350
Great Falls, MT 59406
Phone 406-453-5478
Fax 406-453-2009

Owner

SAND COULEE WATER DISTRICT

Project Title

SAND COULEE WATER IMPROVEMENTS 2014

Sheet Title

DISTRIBUTION CENTRAL DAHN'S LANE

Sheet	Of
D-6	38

Copyright © 2015 NCI, All Rights Reserved

File #

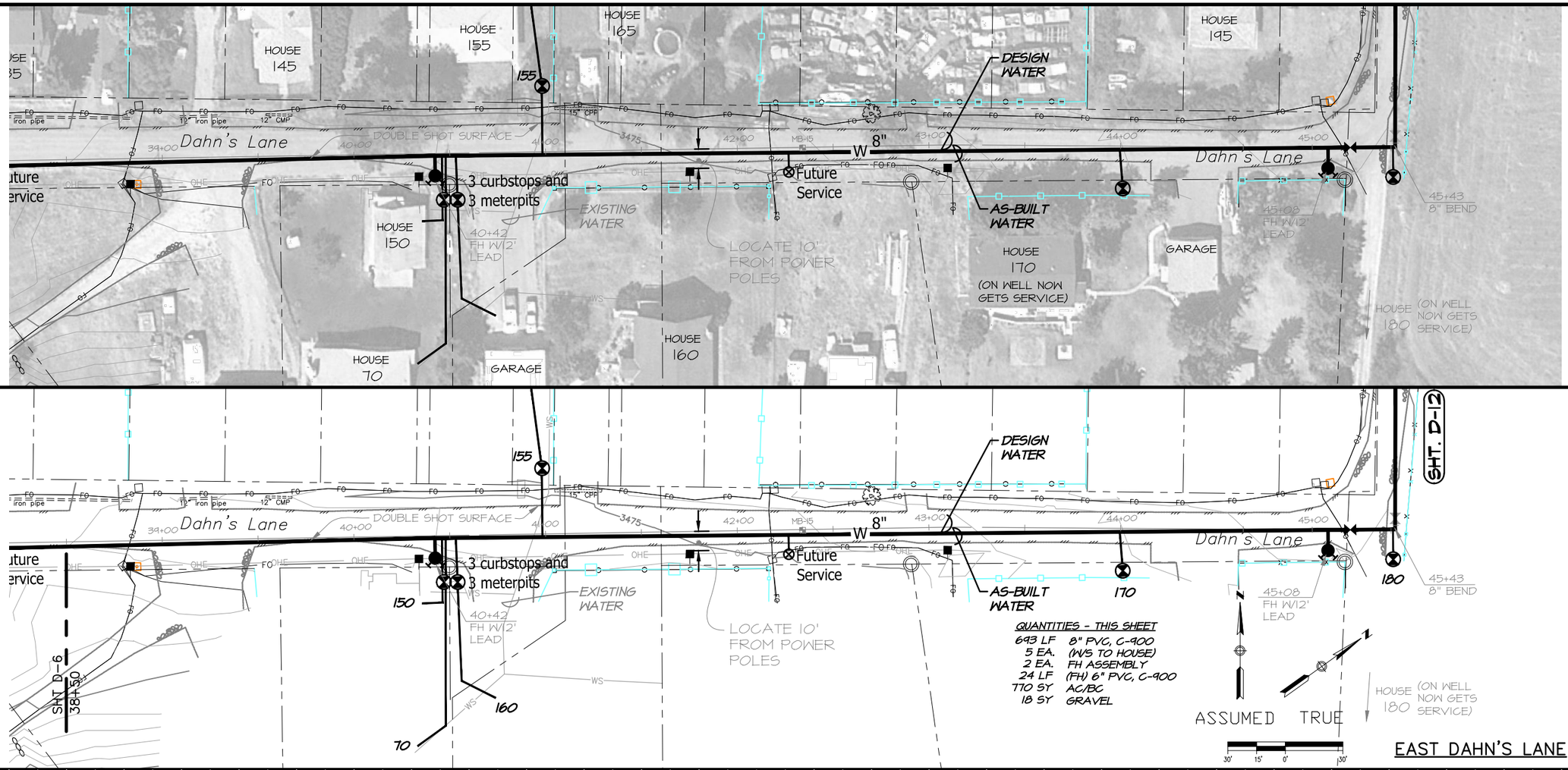

770 S.Y. AC/BC
ALSO: @ FH (40+42) = 9 S.Y. GRAVEL
@ FH (45+08) = 9 S.Y. GRAVEL

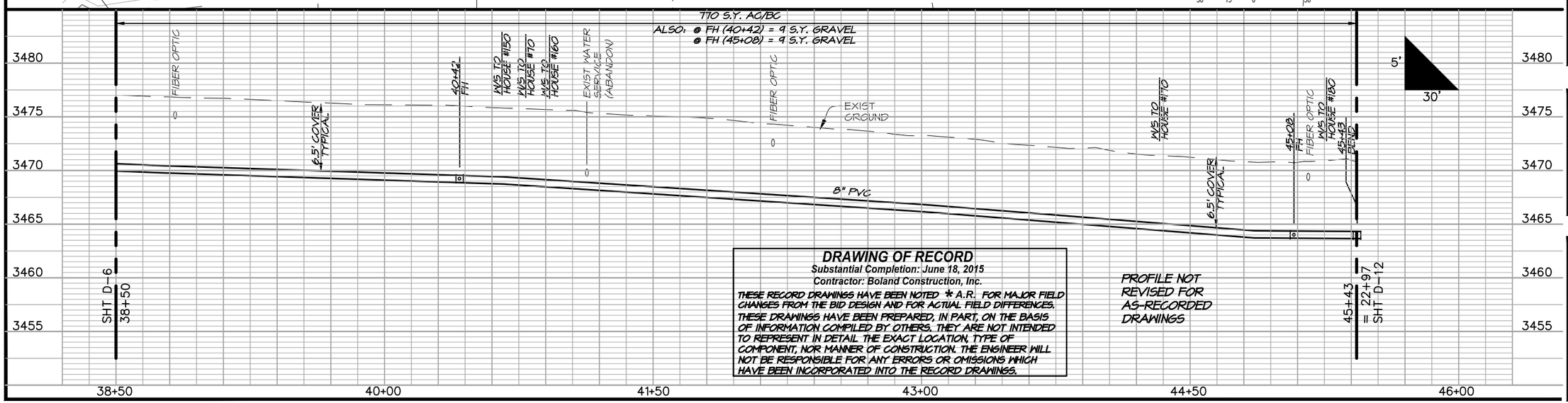

DRAWING OF RECORD
Substantial Completion: June 18, 2015
Contractor: Boland Construction, Inc.

THESE RECORD DRAWINGS HAVE BEEN NOTED * A.R. FOR MAJOR FIELD CHANGES FROM THE BID DESIGN AND FOR ACTUAL FIELD DIFFERENCES. THESE DRAWINGS HAVE BEEN PREPARED, IN PART, ON THE BASIS OF INFORMATION COMPILED BY OTHERS. THEY ARE NOT INTENDED TO REPRESENT IN DETAIL THE EXACT LOCATION, TYPE OF COMPONENT, NOR MANNER OF CONSTRUCTION. THE ENGINEER WILL NOT BE RESPONSIBLE FOR ANY ERRORS OR OMISSIONS WHICH HAVE BEEN INCORPORATED INTO THE RECORD DRAWINGS.

PROFILE NOT REVISED FOR AS-RECORDED DRAWINGS

Revisions	By	Date
AS-RECORDED	KF	7/2015

File No.	Job No.
43.109	1207 1207 D-7
Date	Scale
3/21/14	AS SHOWN

Professional Seal
MONTANA
John A. Neil
4682 E
REGISTERED PROFESSIONAL ENGINEER

Engineers
Environmental Specialists
Planners
Designers
Surveyors
NCI Engineering
4509 North Star Boulevard
P.O. Box 6350
Great Falls, MT 59406
Phone 406-453-5478
Fax 406-453-2009

Owner
SAND COULEE WATER DISTRICT

Project Title
SAND COULEE WATER IMPROVEMENTS
2014

Sheet Title
DISTRIBUTION
EAST DAHN'S LANE

Sheet	Of
D-7	38

Copyright © 2015 NCI, All Rights Reserved
File #

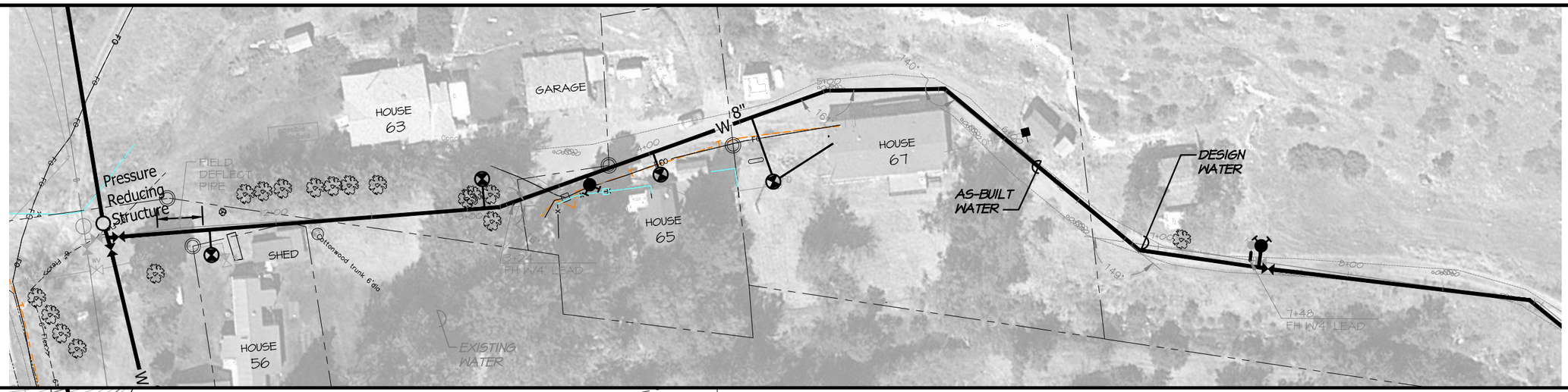

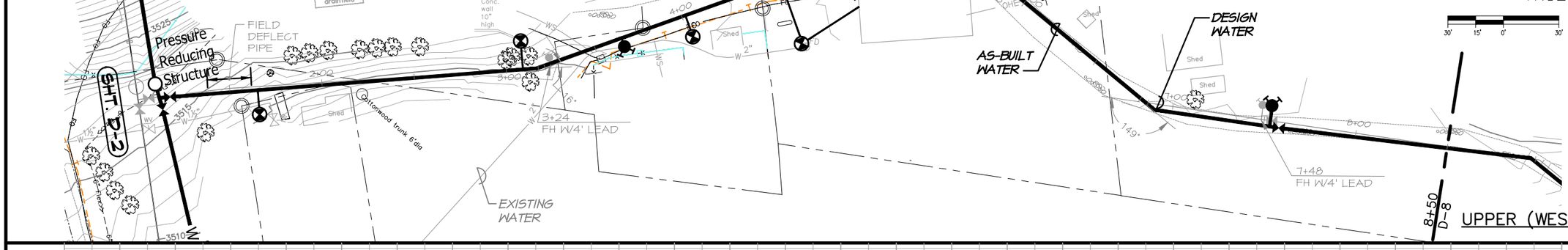

DRAWING OF RECORD
Substantial Completion: June 18, 2015
Contractor: Boland Construction, Inc.

THESE RECORD DRAWINGS HAVE BEEN NOTED * A.R. FOR MAJOR FIELD CHANGES FROM THE BID DESIGN AND FOR ACTUAL FIELD DIFFERENCES. THESE DRAWINGS HAVE BEEN PREPARED, IN PART, ON THE BASIS OF INFORMATION COMPILED BY OTHERS. THEY ARE NOT INTENDED TO REPRESENT IN DETAIL THE EXACT LOCATION, TYPE OF COMPONENT, NOR MANNER OF CONSTRUCTION. THE ENGINEER WILL NOT BE RESPONSIBLE FOR ANY ERRORS OR OMISSIONS WHICH HAVE BEEN INCORPORATED INTO THE RECORD DRAWINGS.

PROFILE NOT REVISED FOR AS-RECORDED DRAWINGS

QUANTITIES - THIS SHEET

750 LF	8" PVC, C-900
2 EA.	8" GV W/BOX
2 EA.	FH ASSEMBLY
8 LF	(FH) 6" PVC, C-900
4 EA.	(W'S TO HOUSE)
202 SY	SOD RESTORATION
464 SY	GRAVEL

ASSUMED TRUE
30' 15' 0' 30'

8+50 D-8 UPPER (WEST)

Revisions	By	Date
AS-RECORDED	KF	7/2015

File No.	Job No.
43.109	1207 1207 D-8
Date	Scale
3/21/14	AS SHOWN

Professional Seal
MONTANA John C. O'Neil 4682 E REGISTERED PROFESSIONAL ENGINEER

Engineers
Environmental Specialists
Planners
Designers
Surveyors
NCI Engineering
4509 North Star Boulevard
P.O. Box 6350
Great Falls, MT 59406
Phone 406-453-5478
Fax 406-453-2009

Owner
SAND COULEE WATER DISTRICT

Project Title
SAND COULEE WATER IMPROVEMENTS
2014

Sheet Title
DISTRIBUTION
UPPER
(WEST)

Sheet	Of
D-8	38

Copyright © 2015 NCI, All Rights Reserved
File #

DRAWING OF RECORD

Substantial Completion: June 18, 2015
Contractor: Boland Construction, Inc.

THESE RECORD DRAWINGS HAVE BEEN NOTED * A.R. FOR MAJOR FIELD CHANGES FROM THE BID DESIGN AND FOR ACTUAL FIELD DIFFERENCES. THESE DRAWINGS HAVE BEEN PREPARED, IN PART, ON THE BASIS OF INFORMATION COMPILED BY OTHERS. THEY ARE NOT INTENDED TO REPRESENT IN DETAIL THE EXACT LOCATION, TYPE OF COMPONENT, NOR MANNER OF CONSTRUCTION. THE ENGINEER WILL NOT BE RESPONSIBLE FOR ANY ERRORS OR OMISSIONS WHICH HAVE BEEN INCORPORATED INTO THE RECORD DRAWINGS.

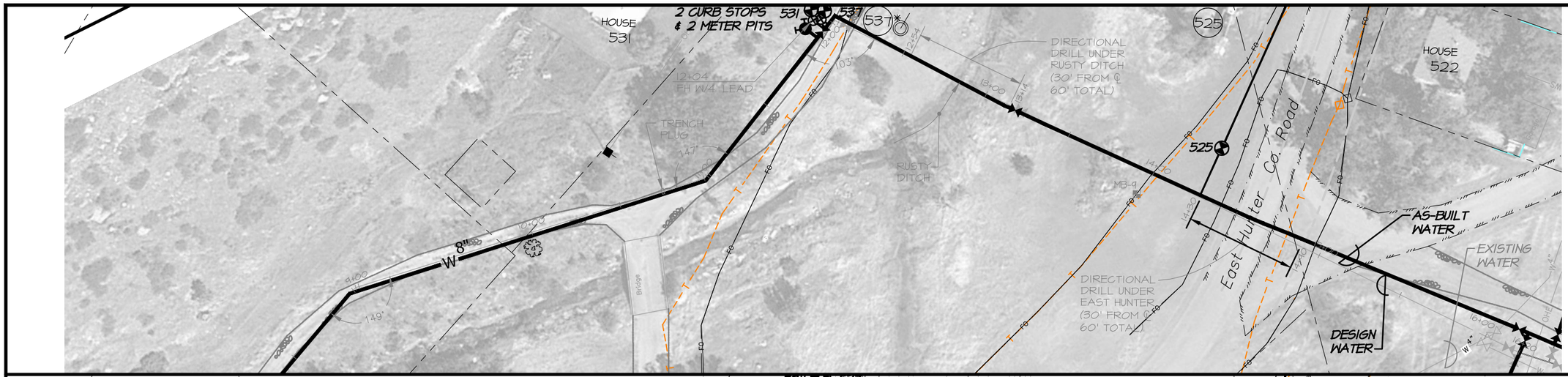

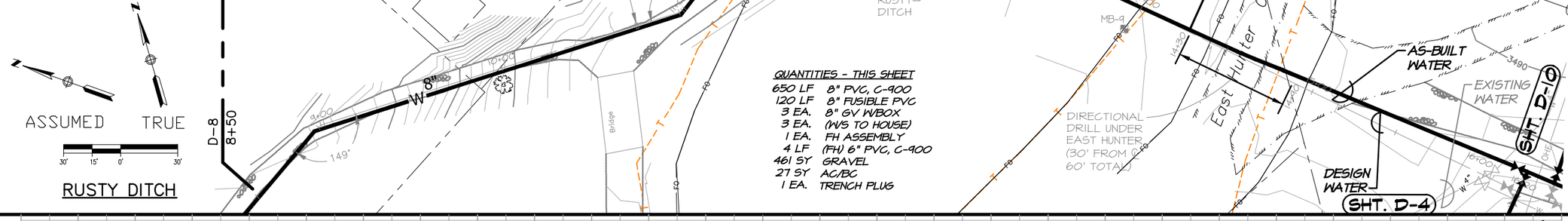

QUANTITIES - THIS SHEET

650 LF	8" PVC, C-900
120 LF	8" FUSIBLE PVC
3 EA.	8" GV WBOX
3 EA.	(WS TO HOUSE)
1 EA.	FH ASSEMBLY
4 LF	(FH) 6" PVC, C-900
461 SY	GRAVEL
27 SY	AC/BC
1 EA.	TRENCH PLUG

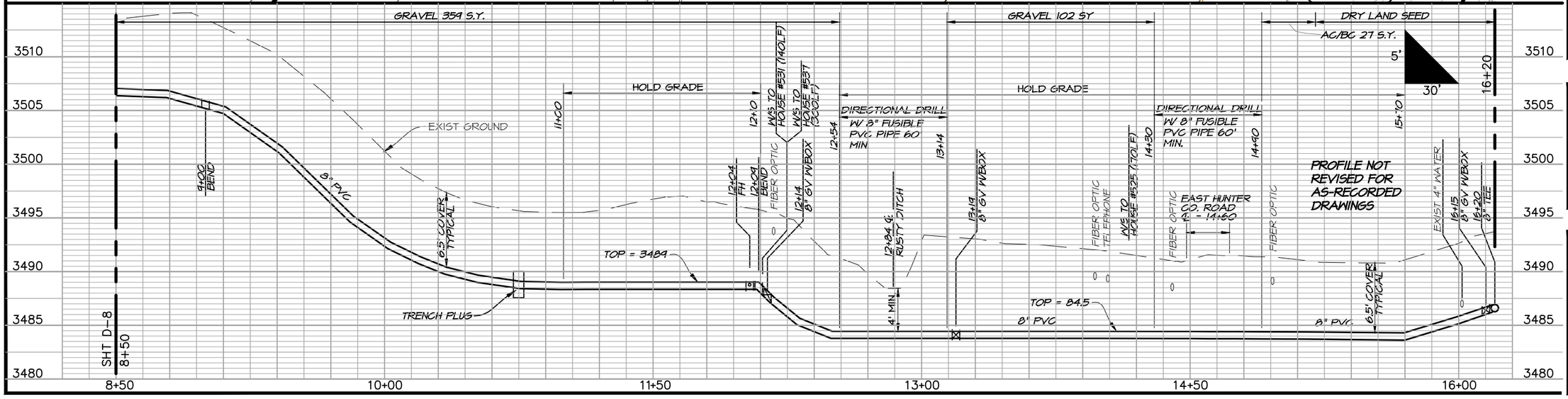

Revisions	By	Date
AS-RECORDED	KF	7/2015

File No.	Job No.
43.109	1207 1207 D-9
Date	**Scale**
3/21/14	AS SHOWN

Professional Seal

MONTANA
John A. O'Neil
4682 E
REGISTERED PROFESSIONAL ENGINEER

Engineers
Environmental Specialists
Planners
Designers
Surveyors

NCI Engineering

4509 North Star Boulevard
P.O. Box 6350
Great Falls, MT 59406
Phone 406-453-5478
Fax 406-453-2009

Owner

SAND COULEE WATER DISTRICT

Project Title

SAND COULEE WATER IMPROVEMENTS 2014

Sheet Title

DISTRIBUTION RUSTY DITCH

Sheet	Of
D-9	38

Copyright © 2015 NCI, All Rights Reserved

File #

HOUSE 522
HOUSE 526
HOUSE 528
DUSKO
SC BAR
ROSIE'S LANE
6" W
4+74 FH W/ 150' LEAD W/ GUARD POSTS (SEE SHT D-15)
FIRE LINE
DESIGN WATER
AS-BUILT WATER
EXISTING WATER
Service for this structure
8" W
2+68 FH W/ 12' LEAD
FIELD DEFLECT PIPE
BOX W/ 3 CURB STOPS
EXIST FENCE REPAIR
Wheelstops
ASSUMED TRUE
DUSKO'S ALLEY
SHT. D-9
SHT. D-4
Garage
Steps
bar
Movable Fence
drill pipe fence

QUANTITIES - THIS SHEET

750 LF	8" PVC, C-900
1 EA.	8" GV W/BOX
6 EA.	(W/S TO HOUSE)
2 EA.	FH ASSEMBLY
162 LF	(FH) 6" PVC, C-900
157 SY	GRAVEL
20 SY	AC/BC

DRY LAND SEED
GRAVEL 12 S.Y.
AC/BC 20 S.Y.
ALSO: @ FH (2+68) = DRY LAND SEED
@ FH (4+74) = 133 SY GRAVEL
W/S TO HOUSE #522
W/S TO HOUSE #526
W/S TO HOUSE #46
W/S TO HOUSE #528 (45 L.F.)
EXIST WATER SERVICE (ABANDON)
2+68 FH
4+74 FH
6.5' COVER TYPICAL
EXIST GROUND
6+43 BEND
W/S TO HOUSE #85
W/S TO HOUSE #95
7+48 BEND
8" PVC
EXIST 4" WATER
1+20 8" TEE
1+05 8" GV W/BOX
5'
30'
SHT D-4
SHT D-11
3495
3490
3485
3480
3475
3470
1+00
2+50
4+00
5+50
7+00
8+50

DRAWING OF RECORD
Substantial Completion: June 18, 2015
Contractor: Boland Construction, Inc.
THESE RECORD DRAWINGS HAVE BEEN NOTED * A.R. FOR MAJOR FIELD CHANGES FROM THE BID DESIGN AND FOR ACTUAL FIELD DIFFERENCES. THESE DRAWINGS HAVE BEEN PREPARED, IN PART, ON THE BASIS OF INFORMATION COMPILED BY OTHERS. THEY ARE NOT INTENDED TO REPRESENT IN DETAIL THE EXACT LOCATION, TYPE OF COMPONENT, NOR MANNER OF CONSTRUCTION. THE ENGINEER WILL NOT BE RESPONSIBLE FOR ANY ERRORS OR OMISSIONS WHICH HAVE BEEN INCORPORATED INTO THE RECORD DRAWINGS.

PROFILE NOT REVISED FOR AS-RECORDED DRAWINGS

Revisions	By	Date
AS-RECORDED	KF	7/2015

File No.	Job No.
43.109	1207 1207 D-10
Date	Scale
3/21/14	AS SHOWN

Professional Seal
MONTANA
John C. O'Neil
4682 E
REGISTERED PROFESSIONAL ENGINEER

Engineers
Environmental Specialists
Planners
Designers
Surveyors
NCI Engineering
4509 North Star Boulevard
P.O. Box 6350
Great Falls, MT 59406
Phone 406-453-5478
Fax 406-453-2009

Owner
SAND COULEE WATER DISTRICT

Project Title
SAND COULEE WATER IMPROVEMENTS
2014

Sheet Title
DISTRIBUTION
DUSKO'S ALLEY

Sheet	Of
D-10	38

Copyright © 2015 NCI, All Rights Reserved
File #

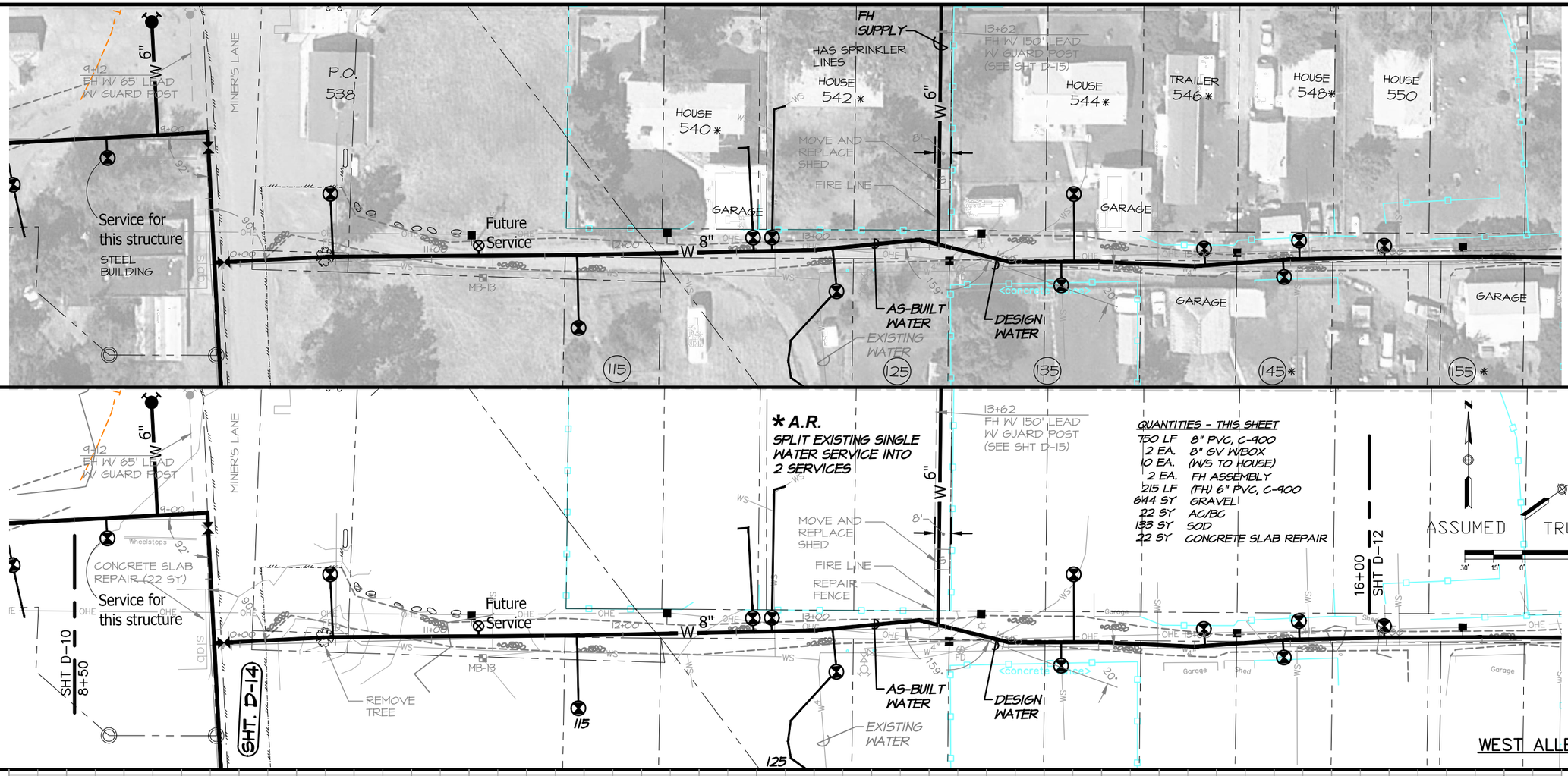

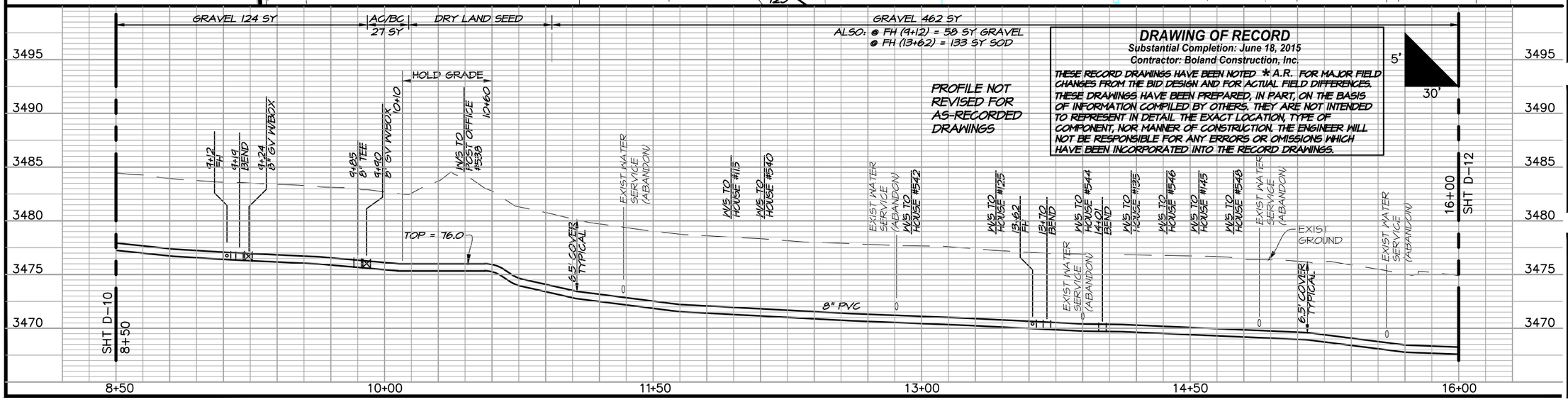

Revisions	By	Date
AS-RECORDED	KF	7/2015

File No.	Job No.
43.109	1207 1207 D-11
Date	Scale
3/21/14	AS SHOWN

Professional Seal

MONTANA
John A. Neil
4682 E
REGISTERED PROFESSIONAL ENGINEER

Engineers
Environmental Specialists
Planners
Designers
Surveyors

NCI Engineering

4509 North Star Boulevard
P.O. Box 6350
Great Falls, MT 59406
Phone 406-453-5478
Fax 406-453-2009

Owner

SAND COULEE WATER DISTRICT

Project Title

SAND COULEE WATER IMPROVEMENTS 2014

Sheet Title

DISTRIBUTION
WEST ALLEY

Sheet	Of
D-11	38

Copyright © 2015 NCI, All Rights Reserved

File #

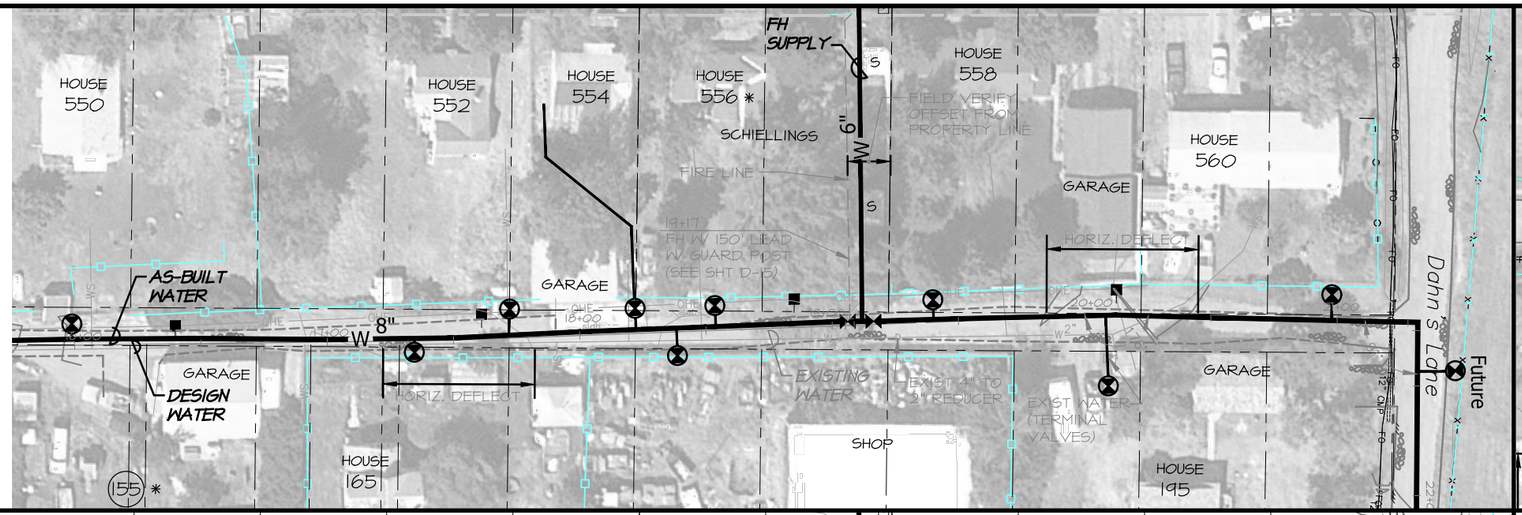

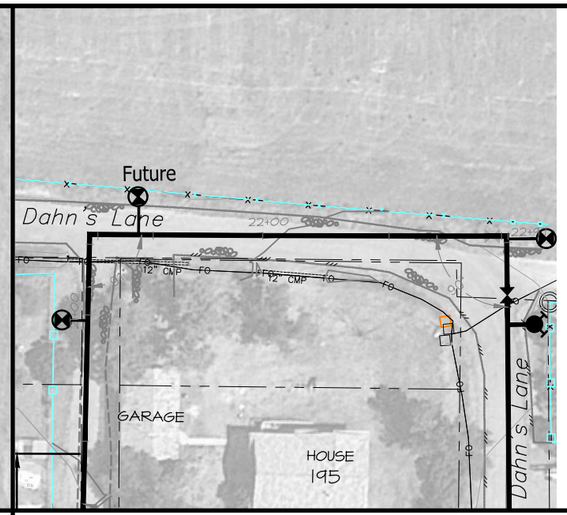

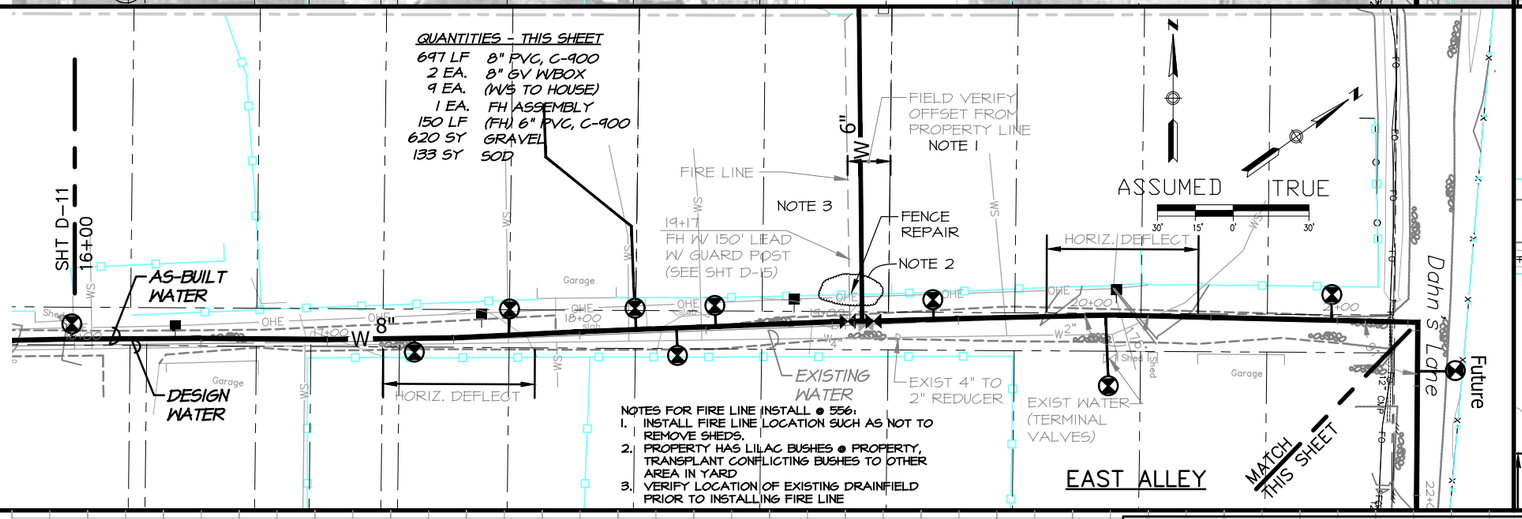

QUANTITIES - THIS SHEET

697 LF	8" PVC, C-900
2 EA.	8" GV WBOX
9 EA.	(WS TO HOUSE)
1 EA.	FH ASSEMBLY
150 LF	(FH) 6" PVC, C-900
620 SY	GRAVEL
133 SY	SOD

NOTES FOR FIRE LINE INSTALL @ 556:
1. INSTALL FIRE LINE LOCATION SUCH AS NOT TO REMOVE SHEDS.
2. PROPERTY HAS LILAC BUSHES @ PROPERTY, TRANSPLANT CONFLICTING BUSHES TO OTHER AREA IN YARD
3. VERIFY LOCATION OF EXISTING DRAINFIELD PRIOR TO INSTALLING FIRE LINE

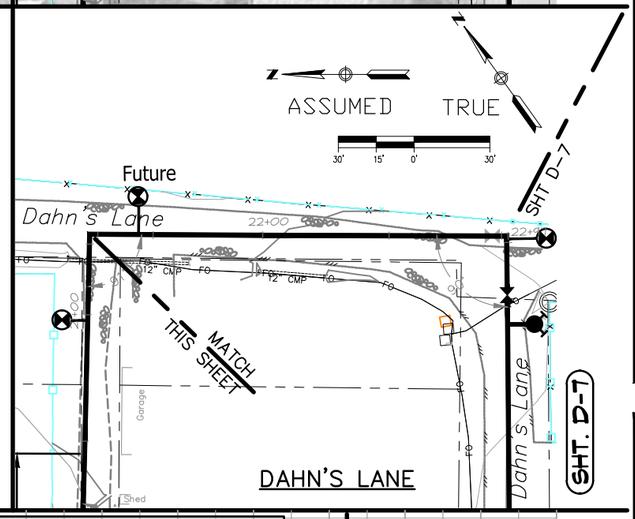

GRAVEL 620 SY
ALSO: @ FH (19+17) 133 SY SOD

DRAWING OF RECORD
Substantial Completion: June 18, 2015
Contractor: Boland Construction, Inc.

THESE RECORD DRAWINGS HAVE BEEN NOTED * A.R. FOR MAJOR FIELD CHANGES FROM THE BID DESIGN AND FOR ACTUAL FIELD DIFFERENCES.
THESE DRAWINGS HAVE BEEN PREPARED, IN PART, ON THE BASIS OF INFORMATION COMPILED BY OTHERS. THEY ARE NOT INTENDED TO REPRESENT IN DETAIL THE EXACT LOCATION, TYPE OF COMPONENT, NOR MANNER OF CONSTRUCTION. THE ENGINEER WILL NOT BE RESPONSIBLE FOR ANY ERRORS OR OMISSIONS WHICH HAVE BEEN INCORPORATED INTO THE RECORD DRAWINGS.

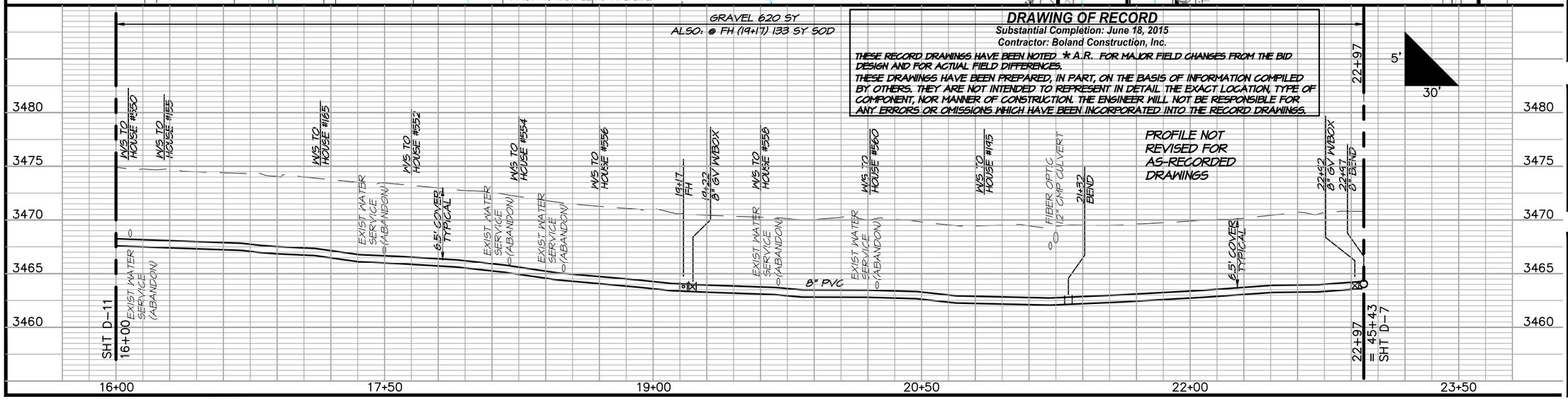

Revisions	By	Date
AS-RECORDED	KF	7/2015

File No.	Job No.
43.109	1207 1207 D-12
Date	Scale
3/21/14	AS SHOWN

Professional Seal
MONTANA
John A. Neil
4682 E
REGISTERED PROFESSIONAL ENGINEER

Engineers
Environmental Specialists
Planners
Designers
Surveyors
NCI Engineering
4509 North Star Boulevard
P.O. Box 6350
Great Falls, MT 59406
Phone 406-453-5478
Fax 406-453-2009

Owner
SAND COULEE WATER DISTRICT

Project Title
SAND COULEE WATER IMPROVEMENTS
2014

Sheet Title
DISTRIBUTION
EAST ALLEY AND DAHN'S LANE

Sheet	Of
D-12	38

Copyright © 2015 NCI, All Rights Reserved
File #

Revisions	By	Date
AS-RECORDED	KF	7/2015

File No.	Job No.
43.109	1207 1207 D-13
Date	Scale
3/21/14	AS SHOWN

Professional Seal

MONTANA
John A. Nagel
4682 E
REGISTERED PROFESSIONAL ENGINEER

Engineers
Environmental Specialists
Planners
Designers
Surveyors

NCI Engineering

4509 North Star Boulevard
P.O. Box 6350
Great Falls, MT 59406
Phone 406-453-5478
Fax 406-453-2009

Owner

SAND COULEE WATER DISTRICT

Project Title

SAND COULEE WATER IMPROVEMENTS 2014

Sheet Title

DISTRIBUTION MINER'S LANE

Sheet	Of
D-13	38

Copyright © 2015 NCI, All Rights Reserved

File #

8" Dahn's Lane W

HOUSE 70

ROSIE'S LANE

HOUSE 70

DESIGN WATER

FENCE REPAIR

Air Release

AS-BUILT WATER

EXISTING WATER

HOUSE 50

HOUSE 70

ROSIE'S LANE

Dade Lane

Air Release

155

4+71 FH W20' LEAD

HOUSE 75

8" Miner's Lane W

7+41 FH W15' LEAD

HOUSE 105

HOUSE 95

HOUSE 85

HOUSE 10

SERVICE LINES (SEE SHEET D-14 FOR METER PIT LOCATIONS)

T5

8" Dahn's Lane W

SHT. D-5

ASSUMED TRUE

DESIGN WATER

FENCE REPAIR

Air Release

MATCH THIS SHEET

AS-BUILT WATER

EXISTING WATER

MATCH THIS SHEET

ASSUMED TRUE

Air Release

Dade Lane

155

4+71 FH W20' LEAD

8" Miner's Lane W

7+41 FH W15' LEAD

SHT. D-14

D-14 7+90

MINER'S LANE

DRAWING OF RECORD

Substantial Completion: June 18, 2015

Contractor: Boland Construction, Inc.

THESE RECORD DRAWINGS HAVE BEEN NOTED * A.R. FOR MAJOR FIELD CHANGES FROM THE BID DESIGN AND FOR ACTUAL FIELD DIFFERENCES. THESE DRAWINGS HAVE BEEN PREPARED, IN PART, ON THE BASIS OF INFORMATION COMPILED BY OTHERS. THEY ARE NOT INTENDED TO REPRESENT IN DETAIL THE EXACT LOCATION, TYPE OF COMPONENT, NOR MANNER OF CONSTRUCTION. THE ENGINEER WILL NOT BE RESPONSIBLE FOR ANY ERRORS OR OMISSIONS WHICH HAVE BEEN INCORPORATED INTO THE RECORD DRAWINGS.

QUANTITIES - THIS SHEET

690 LF	8" PVC, C-900
1 EA.	8" GV WBOX
7 EA.	(WS TO HOUSE)
2 EA.	FH ASSEMBLY
35 LF	(FH) 6" PVC, C-900
485 SY	GRAVEL

GRAVEL 49 SY

DRY LAND SEED

GRAVEL 436 SY

ALSO: @ FH (4+21) DRY LAND SEED
@ FH (7+41) DRY LAND SEED

SHT D-5

1+00

1+00 8" TEE

1+05 8" GV WBOX

WS TO HOUSE #50

WS TO HOUSE #70

6.5' COVER TYPICAL

4" WATER (ABANDON)

2+29

EXIST GROUND

* A.R. PIPE FOLLOWED GROUND PROFILE

HOLD GRADE

TOP = 3487

3+04 BEND

3+83 BEND

8" PVC

FIBER OPTIC

4+71 FH

4+88 BEND

5+00

WS TO HOUSE #105

WS TO HOUSE #75

WS TO HOUSE #85

EXIST WATER SERVICE (ABANDON)

5+47

5+77 BEND

6+27 BEND

6+80 BEND

HOLD GRADE

TOP = 89.5

WS TO HOUSE #35

WS TO HOUSE #75

MINE DRAIN (SIZE AND LOCATION UNKNOWN)

7+41 FH

7+76 BEND

7+89

7+90

SHT D-14

5'

30'

PROFILE NOT REVISED FOR AS-RECORDED DRAWINGS

3505
3500
3495
3490
3485
3480
3475

1+00
2+50
4+00
5+50
7+00

Revisions	By	Date
AS-RECORDED	KF	7/2015

File No.	Job No.
43.109	1207 1207 D-14
Date	Scale
3/21/14	AS SHOWN

Professional Seal

MONTANA
John A. Neil
4682 E
REGISTERED PROFESSIONAL ENGINEER

Engineers
Environmental Specialists
Planners
Designers
Surveyors

NCI Engineering

4509 North Star Boulevard
P.O. Box 6350
Great Falls, MT 59406
Phone 406-453-5478
Fax 406-453-2009

Owner

SAND COULEE WATER DISTRICT

Project Title

SAND COULEE WATER IMPROVEMENTS 2014

Sheet Title

DISTRIBUTION MINER'S LANE CONNECTORS

Sheet	Of
D-14	38

Copyright © 2015 NCI, All Rights Reserved

File #

East Hunter

P.O.

PARK

Dahn's Lane

HOUSE 90

GARAGE

HOUSE 10

SHT D-6

AS-BUILT WATER

Miner's Lane

<minewater drainpipe location and depth unknown<<

DESIGN WATER

HOUSE 70

HOUSE 75

SHED

SHT D-11

Service for this structure

1+00 – MATCH LINE

#100

EXISTING WATER

85

GARAGE

HOUSE 85

75

SHT. D-11

SHT. D-6

SHT D-6 2+75

SHT D-6 8+98

SHT D-13 7+90

SHT. D-13

SHT. D-6

SHT D-11 1+00

slab

Wheelstops

OHE

QUANTITIES - THIS SHEET

283 LF 8" PVC, C-900
2 EA. 8" GV W/BOX
2 EA. (W/S TO HOUSE)
44 S.Y. A/C B/C
215 S.Y. GRAVEL

ASSUMED

TRUE

30' 15' 0' 30'

GRAVEL 120 S.Y.

A/C B/C 44 S.Y.

5'

30'

1+00 8" TEE

EXIST. GROUND

FIBER OPTIC TELEPHONE 15" CMP CULVERT

2+10 8" GV W/BOX

2+75 8" TEE

6.5' COVER TYPICAL

8" PVC

SHT D-11 1+00

2+75 SHT D-6

8" CONNECTOR

PROFILE NOT REVISED FOR AS-RECORDED DRAWINGS

GRAVEL 95 S.Y.

SHT D-6 8+98

W/S TO HOUSE #10

W/S TO HOUSE #70

7+90 SHT D-13

8+98 8" TEE

8+93 8" GV W/BOX

4" WATER (ABANDON)

8" PVC

8" DAHN'S LANE

3485
3480
3475
3470

3500
3495
3490
3485
3480

1+00
2+50
8+98
7+90

DRAWING OF RECORD

Substantial Completion: June 18, 2015
Contractor: Boland Construction, Inc.

THESE RECORD DRAWINGS HAVE BEEN NOTED * A.R. FOR MAJOR FIELD CHANGES FROM THE BID DESIGN AND FOR ACTUAL FIELD DIFFERENCES. THESE DRAWINGS HAVE BEEN PREPARED, IN PART, ON THE BASIS OF INFORMATION COMPILED BY OTHERS. THEY ARE NOT INTENDED TO REPRESENT IN DETAIL THE EXACT LOCATION, TYPE OF COMPONENT, NOR MANNER OF CONSTRUCTION. THE ENGINEER WILL NOT BE RESPONSIBLE FOR ANY ERRORS OR OMISSIONS WHICH HAVE BEEN INCORPORATED INTO THE RECORD DRAWINGS.

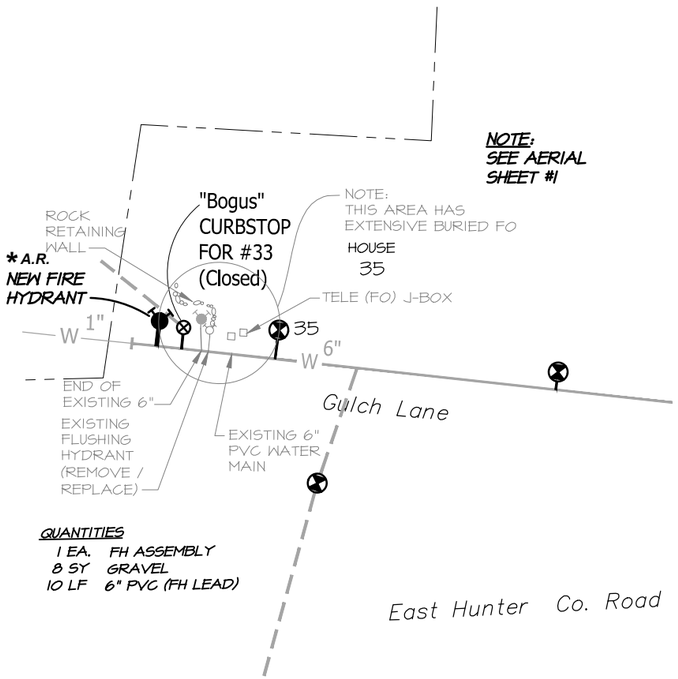

GULCH LANE (WESTERLY)
SHEET 0–1

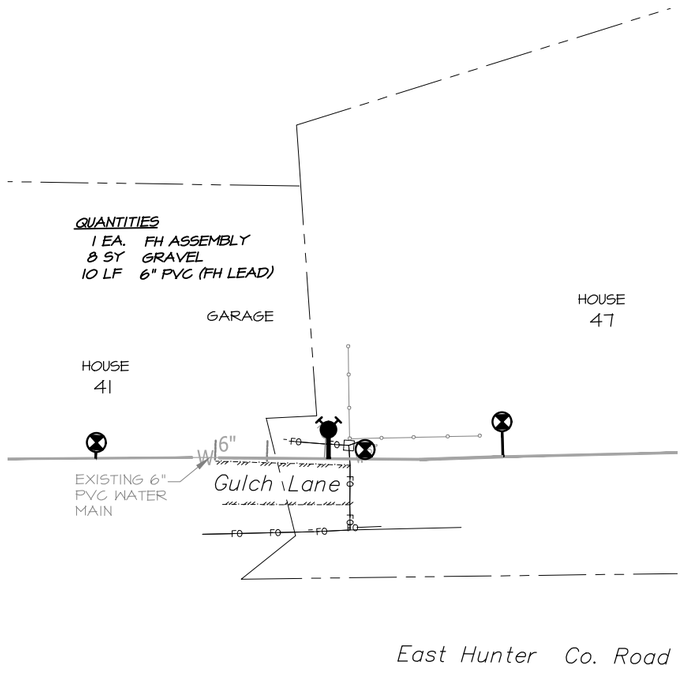

GULCH LANE (CENTRAL)
SHEET 0–1

DRAWING OF RECORD
Substantial Completion: June 18, 2015
Contractor: Boland Construction, Inc.

THESE RECORD DRAWINGS HAVE BEEN NOTED * A.R. FOR MAJOR FIELD CHANGES FROM THE BID DESIGN AND FOR ACTUAL FIELD DIFFERENCES. THESE DRAWINGS HAVE BEEN PREPARED, IN PART, ON THE BASIS OF INFORMATION COMPILED BY OTHERS. THEY ARE NOT INTENDED TO REPRESENT IN DETAIL THE EXACT LOCATION, TYPE OF COMPONENT, NOR MANNER OF CONSTRUCTION. THE ENGINEER WILL NOT BE RESPONSIBLE FOR ANY ERRORS OR OMISSIONS WHICH HAVE BEEN INCORPORATED INTO THE RECORD DRAWINGS.

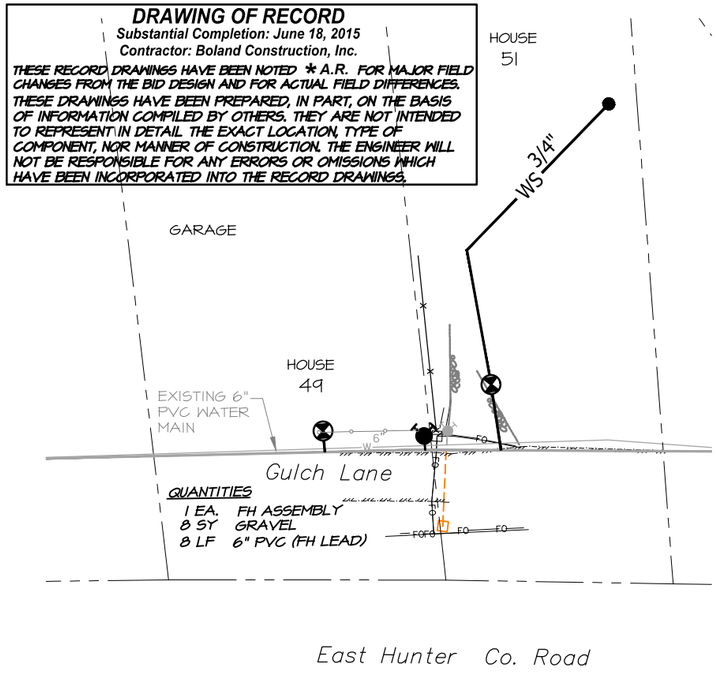

GULCH LANE (EASTERLY)
SHEET 0–1

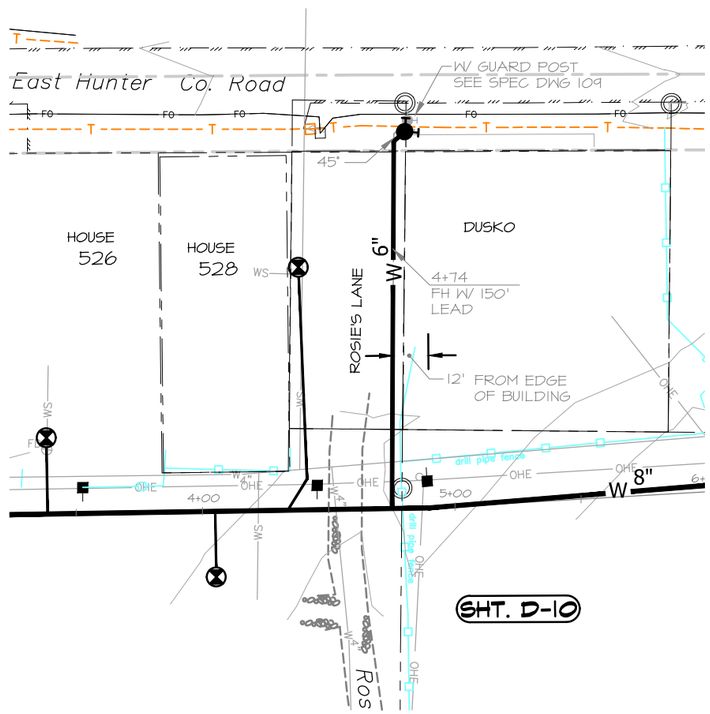

4+74 (DUSKO ALLEY)

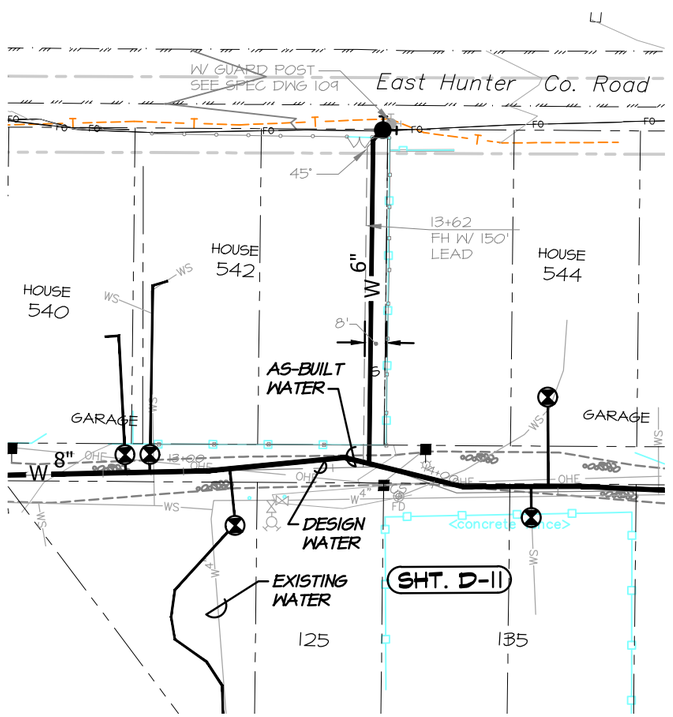

13+62 (WEST ALLEY)

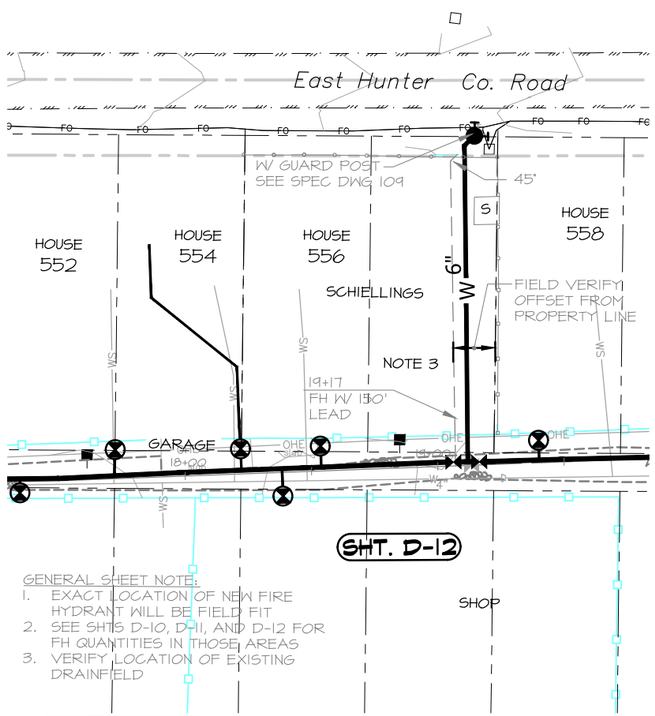

19+17 (EAST ALLEY)

Revisions	By	Date
AS-RECORDED	KF	7/2015

File No.	Job No.
43.109	1207 1207 D-16
Date	Scale
3/21/14	AS SHOWN

Professional Seal

MONTANA
John A. Neil
4682 E
REGISTERED PROFESSIONAL ENGINEER

Engineers
Environmental Specialists
Planners
Designers
Surveyors
NCI Engineering
4509 North Star Boulevard
P.O. Box 6350
Great Falls, MT 59406
Phone 406-453-5478
Fax 406-453-2009

Owner

SAND COULEE WATER DISTRICT

Project Title

SAND COULEE WATER IMPROVEMENTS 2014

Sheet Title

DISTRIBUTION
FIRE HYDRANTS

Sheet	Of
D-15	38

Copyright © 2015 NCI, All Rights Reserved

File # FILE #

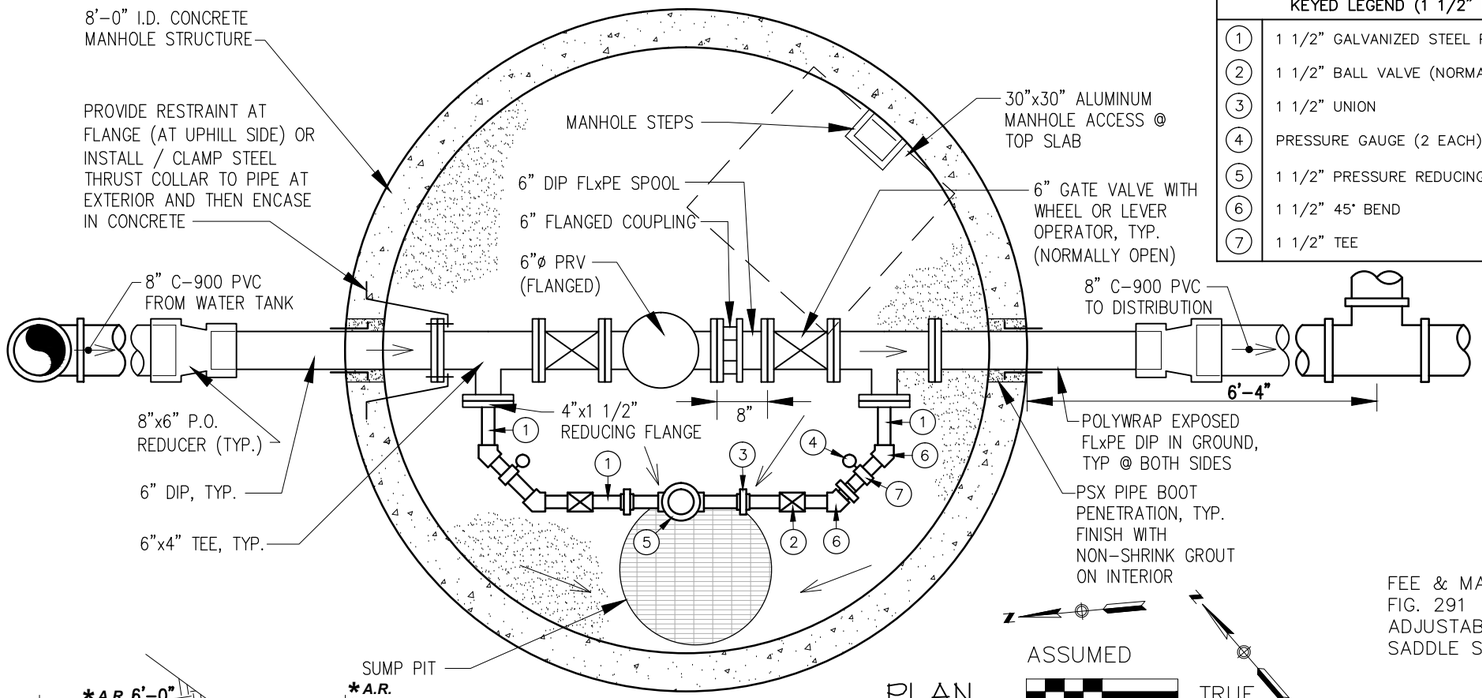

PLAN

ASSUMED TRUE

12" 6" 0 1'

KEYED LEGEND (1 1/2" PIPE)	
1	1 1/2" GALVANIZED STEEL PIPE (SCH 40)
2	1 1/2" BALL VALVE (NORMALLY OPEN)
3	1 1/2" UNION
4	PRESSURE GAUGE (2 EACH) (2/16)
5	1 1/2" PRESSURE REDUCING VALVE
6	1 1/2" 45° BEND
7	1 1/2" TEE

NOTES:

1. PIPING IN MANHOLE IS DIP AND 1½" IS GALVANIZED SCH 40 STEEL
2. PROVIDE PROTECTIVE COATING (SIMILAR TO TNEMEC SERIES #1, NSF CERTIFIED) FOR ALL EXPOSED METALS WITHIN THE VAULT. SAND BLAST PRIOR TO FINISH COAT. APPLY TWO COATS AT 3 MIL EACH.
3. FINE TUNE AND ADJUST PRV PRESSURE SETTINGS MONITORING PRESSURES AT VARIOUS POINTS ALONG DISTRIBUTION
4. 6" PVR = #690G-01BYKCV CLA-VAL
   1½" PVR = #90G-01ASKCV CLA-VAL

DRAWING OF RECORD
Substantial Completion: June 18, 2015
Contractor: Boland Construction, Inc.
*THESE RECORD DRAWINGS HAVE BEEN NOTED * A.R. FOR MAJOR FIELD CHANGES FROM THE BID DESIGN AND FOR ACTUAL FIELD DIFFERENCES. THESE DRAWINGS HAVE BEEN PREPARED, IN PART, ON THE BASIS OF INFORMATION COMPILED BY OTHERS. THEY ARE NOT INTENDED TO REPRESENT IN DETAIL THE EXACT LOCATION, TYPE OF COMPONENT, NOR MANNER OF CONSTRUCTION. THE ENGINEER WILL NOT BE RESPONSIBLE FOR ANY ERRORS OR OMISSIONS WHICH HAVE BEEN INCORPORATED INTO THE RECORD DRAWINGS.*

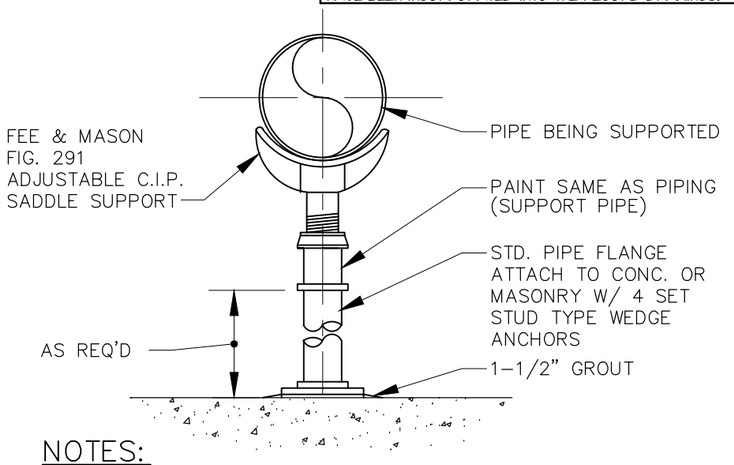

NOTES:

1. PROVIDE HALF ROUND RIGID INSUL. & INSUL. PROTECTION SHIELD SIMILAR TO GRINNELL FIG. 167 OR ELCEN FIG.119, WHERE PIPING IS INSULATED.
2. PROVIDE NEOPRENE WAFFLE INSUL. PAD, SIMILAR TO FEE & MASON TYPE W UNDER PIPE SUPPORT WHEN PIPE IS ISOLATED OR SUPPORT IS ADJACENT TO MECHANICAL EQUIPMENT.
3. SIZE SUPPORT PIPE & SADDLE PER PIPE BEING SUPPORTED.

PIPE SUPPORT - FLOOR (1/16)
NO SCALE

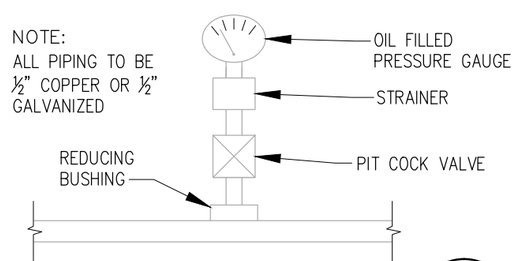

PRESSURE GAUGE (2/16)
NO SCALE

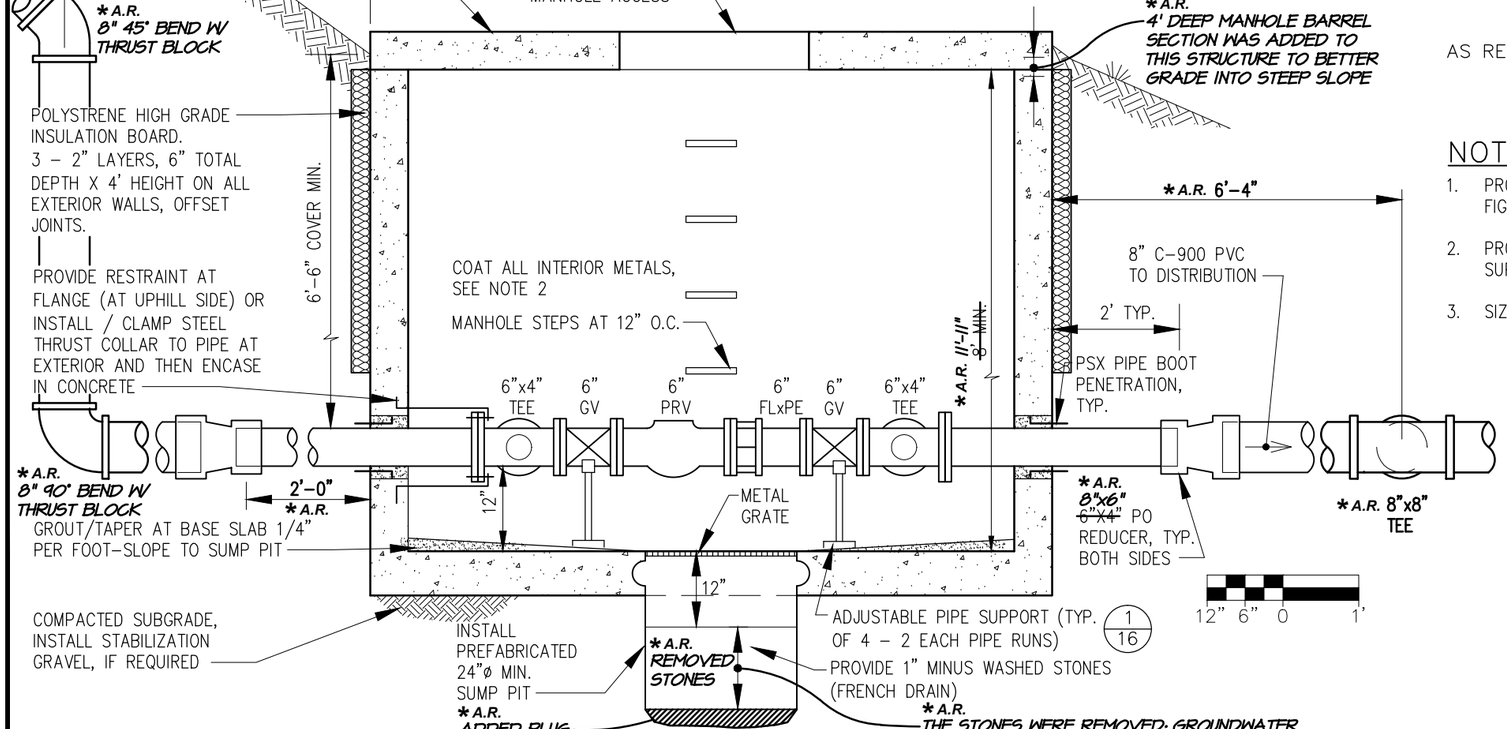

PRESSURE REDUCING STATION

VERTICAL SECTION

Revisions	By	Date
AS-RECORDED	KF	7/2015

File No.	Job No.
43.109	1207 1207-D-16
Date	Scale
3/21/14	AS SHOWN

Professional Seal
MONTANA
4682 E
REGISTERED PROFESSIONAL ENGINEER

Engineers
Environmental Specialists
Planners
Designers
Surveyors
NCI Engineering
4509 North Star Boulevard
P.O. Box 6350
Great Falls, MT 59406
Phone 406-453-5478
Fax 406-453-2009

Owner
SAND COULEE WATER DISTRICT

Project Title
SAND COULEE WATER IMPROVEMENTS
2014

Sheet Title
DISTRIBUTION PRESSURE REDUCING STATION

Sheet	Of
D-16	38

Copyright © 2015 NCI, All Rights Reserved
File # FILE #

DRAWING OF RECORD
Substantial Completion: June 18, 2015
Contractor: Boland Construction, Inc.

*THESE RECORD DRAWINGS HAVE BEEN NOTED * A.R. FOR MAJOR FIELD CHANGES FROM THE BID DESIGN AND FOR ACTUAL FIELD DIFFERENCES. THESE DRAWINGS HAVE BEEN PREPARED, IN PART, ON THE BASIS OF INFORMATION COMPILED BY OTHERS. THEY ARE NOT INTENDED TO REPRESENT IN DETAIL THE EXACT LOCATION, TYPE OF COMPONENT, NOR MANNER OF CONSTRUCTION. THE ENGINEER WILL NOT BE RESPONSIBLE FOR ANY ERRORS OR OMISSIONS WHICH HAVE BEEN INCORPORATED INTO THE RECORD DRAWINGS.*

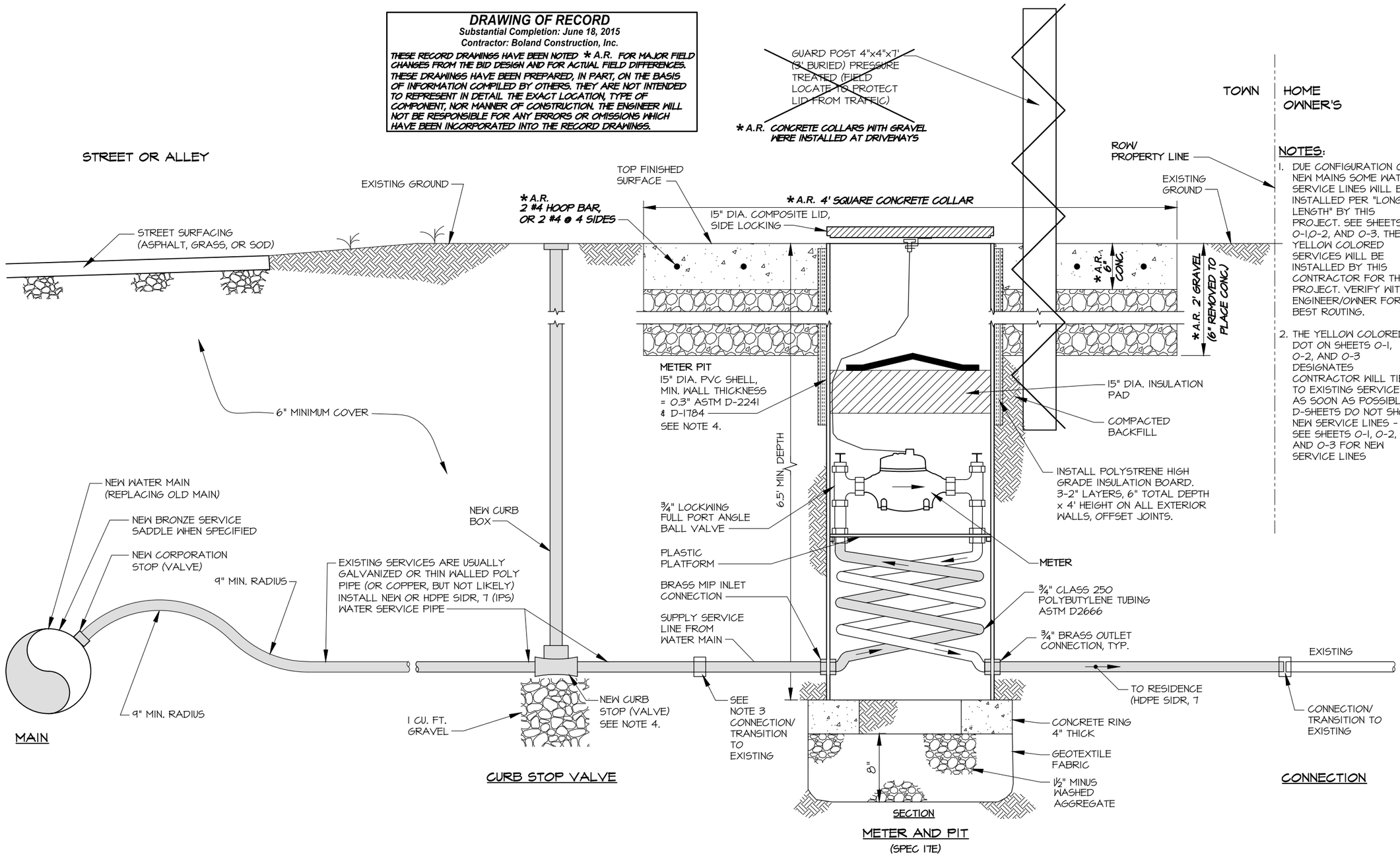

WATER SERVICE INSTALLATION

NO SCALE (SPEC 17H)

NOTES:

1. DUE CONFIGURATION OF NEW MAINS SOME WATER SERVICE LINES WILL BE INSTALLED PER "LONGER LENGTH" BY THIS PROJECT. SEE SHEETS 0-1,0-2, AND 0-3. THE YELLOW COLORED SERVICES WILL BE INSTALLED BY THIS CONTRACTOR FOR THIS PROJECT. VERIFY WITH ENGINEER/OWNER FOR BEST ROUTING.
2. THE YELLOW COLORED DOT ON SHEETS 0-1, 0-2, AND 0-3 DESIGNATES CONTRACTOR WILL TIE TO EXISTING SERVICE AS SOON AS POSSIBLE. D-SHEETS DO NOT SHOW NEW SERVICE LINES - SEE SHEETS 0-1, 0-2, AND 0-3 FOR NEW SERVICE LINES

NOTES:

1. ENSURE PRESSURE TIGHT CONNECTIONS BETWEEN ALL CONNECTIONS BETWEEN NEW AND EXISTING CONNECTIONS.
2. HORIZONTAL DIMENSIONS SHOWN IN PLAN VIEW INDICATE A STANDARD INSTALLATION. EXISTING UNDERGROUND UTILITIES OR SURFACE IMPROVEMENTS MAY PROHIBIT STANDARD INSTALLATION. DIMENSIONS MAY BE MODIFIED AT CONTRACTOR'S REQUEST AND ENGINEER'S APPROVAL. SHOW ALL NON-STANDARD INSTALLATIONS ON RECORD DRAWINGS.
3. ONLY WITH 11 HOUSES ON THE EXISTING 6" WATER MAIN (SHEET 0-1). IT WILL TAKE TWO CONNECTIONS TO EXISTING WATER SERVICE FOR EACH METER AND PIT ALSO AT THESE SAME 11 HOUSES THERE SHOULD BE AN EXISTING CURB STOP NEAR THE EXIST 6" MAIN TO ISOLATE THE WATER SERVICE LINE
4. ACTUAL LOCATION OF CURB STOP BOX AND METER PIT WILL BE FIELD DETERMINED BY ENGINEER AND/OR DISTRICT (KENT LUOMA)

Revisions	By	Date
AS-RECORDED	KF	7/2015

File No.	Job No.
43.109	1207 1207 D-17
Date	Scale
3/21/14	AS SHOWN

Professional Seal

MONTANA
John A. Wolf
4682 E
REGISTERED PROFESSIONAL ENGINEER

Engineers
Environmental Specialists
Planners
Designers
Surveyors

NCI Engineering

4509 North Star Boulevard
P.O. Box 6350
Great Falls, MT 59406
Phone 406-453-5478
Fax 406-453-2009

Owner

SAND COULEE WATER DISTRICT

Project Title

SAND COULEE WATER IMPROVEMENTS 2014

Sheet Title

DISTRIBUTION WATER SERVICE IMPROVEMENTS

Sheet	Of
D-17	38

Copyright © 2015 NCI, All Rights Reserved

File # FILE #

THIS PROJECT

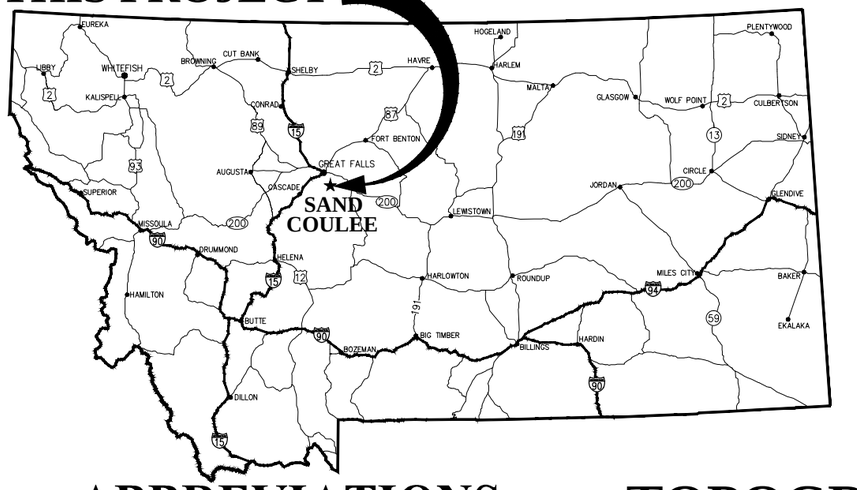

DRAWING OF RECORD
Substantial Completion: June 18, 2015
Contractor: Boland Construction, Inc.

THESE RECORD DRAWINGS HAVE BEEN NOTED * A.R. FOR MAJOR FIELD CHANGES FROM THE BID DESIGN AND FOR ACTUAL FIELD DIFFERENCES. THESE DRAWINGS HAVE BEEN PREPARED, IN PART, ON THE BASIS OF INFORMATION COMPILED BY OTHERS. THEY ARE NOT INTENDED TO REPRESENT IN DETAIL THE EXACT LOCATION, TYPE OF COMPONENT, NOR MANNER OF CONSTRUCTION. THE ENGINEER WILL NOT BE RESPONSIBLE FOR ANY ERRORS OR OMISSIONS WHICH HAVE BEEN INCORPORATED INTO THE RECORD DRAWINGS.

NO SERVICE
('A' = ABANDONED)

HOUSE NUMBER
STRUCTURE TYPE
-HOUSE
-TRAILER
ANSWERED QUESTIONNAIRE

401 HOUSE *

TYPE OF STRUCTURE

ABBREVIATIONS

'A' FILL.....TYPE 'A' BACK FILL
AC.....ASPHALTIC CONCRETE
ACP.....ASBESTOS CEMENT PIPE
ARV.....AIR RELEASE VALVE
BC.....BACK OF CURB/BASE COURSE GRAVEL
'B' FILL.....TYPE 'B' BACK FILL
BW.....BOTH WAYS
CIPP.....CURED-IN-PLACE PIPE
C.J.....CONTROL JOINT
CL.....CENTERLINE
CLR.....CLEAR
C.O.....CLEANOUT
C.P.....CONTROL POINT
DIP.....DUCTILE IRON PIPE
D.N.C.....DO NOT CUT
DT.....DITCH
EA.....EACH
EL., ELEV.....ELEVATION
EX./EXIST.....EXISTING
EO.....EDGE OF OIL
FH, HYD.....FIRE HYDRANT
FL.....FLANGE
F.L.....FLOW LINE
F.F.....FINISH FLOOR ELEVATION
F.O.....FIBER OPTIC
GV.....GATE VALVE
GW.....GUY WIRE
HB.....HOSE BIB
HWY.....HIGHWAY
I.E.....INVERT ELEVATION
LF.....LINEAL FOOT
LH.....LAMP HOLE
LT.....LEFT
MH.....MANHOLE
N.F.....NOT FOUND
NOM.....NOMINAL
N.U.....NO UTILITIES (WATER OR SEWER)
OC.....ON CENTER
OE.....OVERHEAD ELECTRICAL
PCC.....PORTLAND CEMENT CONCRETE
PR.....POINT OF RADIUS
PVC.....POLYVINYL CHLORIDE
R, RAD.....RADIUS
RCP.....REINFORCED CONCRETE PIPE
RT.....RIGHT
SCH, SCHED.....SCHEDULE
SD.....STORM DRAIN
S.....SANITARY SEWER MAIN
SS.....SANITARY SEWER SERVICE
ST.....SEPTIC TANK
STA.....STATION
SURF.....SURFACE
SW.....SIDEWALK
SY.....SQUARE YARDS
TBM.....TEMPORARY BENCH MARK
TC.....TOP OF CURB
T/TEL.....UNDERGROUND TELEPHONE
TI.....THEORETICAL INTERSECTION
TYP.....TYPICAL
UE.....UNDERGROUND ELECTRIC
V.....VERTICAL
VC.....VITRIFIED CLAY
W, WTR.....WATER
WS.....WATER SERVICE

TOPOGRAPHIC LEGEND

(FOR ALL PLAN & PROFILE SHEETS)

	NEW	EXIST
AC EDGE		
EDGE EXIST. TRAVELED WAY		
CONC EDGE (FACE)		
BUILDING		
GRAVEL		
GRASS EDGE		
PROPERTY LINE		
CENTER LINE		
SECTION LINE		
STREAM OR DRAINAGE DITCH		
FOUND PIN/REBAR		
PROPERTY PIN		
FENCE (CHAIN LINK)		
FENCE (WIRE)		
FENCE (WOOD)		
CURB & GUTTER		
CULVERT		
CONTROL POINT		
DECIDUOUS TREE		
BUSH/HEDGE		
DRILL HOLE & NUMBER (GEOTECHNICAL DATA)	DH# 1-7	
LIGHT POLE		
SPOT ELEVATION	28.0	28.0
SIGN		
CONTOURS		3427
DETAIL NUMBER / PAGE ON WHICH DETAIL IS SHOWN	X / X	
HOUSE NOT ON AERIAL BUT IS IN AREA	100	

	NEW	EXIST
BEND		
PLUG		
TEE		
GATE VALVE		
FIRE HYDRANT		
CURB STOP		FD = FOUND
HOSE BIB/YARD HYDRANT		HB
WATER MANHOLE WITH VALVE		
WATER METER PIT	"YELLOW DOT" ON OVERALL SHEETS O-1, O-2 AND, O-3.	
TRANSITION COUPLING		
WATER LINE	W	W
WATER (SERVICE)	WS	WS (UNKNOWN LOCATION)
WELL	W	W
WATER TANK	WT	
STORM DRAIN (CULVERT)		SD
STORM INLET		
UNDERGROUND TELEPHONE		T
UNDERGROUND TELEPHONE (FIBER OPTICS)		FO
NATURAL GAS		G
OVERHEAD ELECTRIC		OHE
UNDERGROUND ELECTRIC		BE
POWER POLE		

SHEET INDEX

GENERAL
G-1 Cover Sheet
G-2 Sheet Index, Abbreviations & Legend
G-3 Notes, Work Scope

OVERALL AERIALS
O-1 Westerly
O-2 Central
O-3 Easterly

DISTRIBUTION
D-1 Overall Water Distribution - Sheet Layout
D-2 Tank Hill
D-3 Gulch Lane
D-4 Fire Hall
D-5 West Dahn's Lane
D-6 Central Dahn's Lane
D-7 East Dahn's Lane
D-8 Upper (West)
D-9 Rusty Creek
D-10 Dusko's Alley
D-11 West Alley
D-12 East Alley & Dahn's Lane
D-13 Miner's Lane
D-14 Miner's Lane Connectors
D-15 Fire Hydrant Plans
D-16 Pressure Reducing Station
D-17 Water Service Improvements

*** A.R.**
FOR DISTRIBUTION AND SERVICE LINES, SEE ALSO THE AERIAL "AS-BUILT WATER MAIN / SERVICES" - SHEETS 1-8

SEE AS-RECORDED AERIAL PLAN SHEETS

STORAGE TANK
ST-1 Site Plan
ST-2 Plan and Elevation
ST-3 Inlet / Outlet Piping
ST-4 Overflow and Drain
ST-5 Overflow and Drain Profile
ST-6 Flow Meter and Manhole

PUMPING (Well House)
P-1 Site Plan
P-2 Architectural
P-3 Elevations
P-4 Masonry
P-5 Electrical and Control
P-6 Miscellaneous Details

TANK ACCESS
T-1 Exist Road Improvements
T-2 Top of Tank Hill
T-3 Sections

Revisions	By	Date
AS-RECORDED	KF	7/2015

File No.	Job No.
43.109	1207 1207-G2
Date	Scale
3/21/14	AS SHOWN

Professional Seal
MONTANA
4682 E
REGISTERED PROFESSIONAL ENGINEER

Engineers
Environmental Specialists
Planners
Designers
Surveyors
NCI Engineering
4509 North Star Boulevard
P.O. Box 6350
Great Falls, MT 59406
Phone 406-453-5478
Fax 406-453-2009

Owner
SAND COULEE WATER DISTRICT

Project Title
SAND COULEE WATER IMPROVEMENTS
2014

Sheet Title
SHEET INDEX ABBREVIATIONS AND LEGEND

Sheet	Of
G-2	38

Copyright © 2015 NCI, All Rights Reserved
File # FILE #

WORKSCOPE

SCHEDULE 1 - WATER DISTRIBUTION

WORK INCLUDES REMOVAL (ABANDONMENT) OF EXISTING SMALLER DIAMETER WATER MAINS AND REPLACING WITH NEW 8" DIAMETER C-900 PVC AND HDPE PIPE AND GATE VALVES, BOXES AND FIRE HYDRANTS. PROJECT WILL LOOP TOWN'S WATER DISTRIBUTION. REPLACING EXISTING WATER SERVICES, CURB STOPS, AND INSTALLING NEW HDPE WATER SERVICE, LENGTH AS REQUIRED WITH EACH RESIDENCE GETTING A VAULTED METER PIT.

SCHEDULE 2 - STORAGE TANK

WORK INCLUDES SITE WORK, EXCAVATION, FOUNDATION AND NEW GLASS LINED 150,000 GALLON TANK. TANK LEVEL CONTROL, INLET, OUTLET, DRAIN AND OVERFLOW PIPING, SUBSURFACE MIXER, FENCING AND REMOVAL OF EXISTING TANK.

SCHEDULE 3 - PUMPING (WELL HOUSE)

WORK INCLUDES INSTALLING NEW WELL HOUSE STRUCTURE. MASONRY WALLS AND METAL ROOF. CONTROL AND ANNUNCIATION OF THE EXISTING 3 WELLS PLUS 1 FUTURE WELL. ALSO NEW FLOW METER FOR MEASUREMENT OF WELLS INLET FLOW.

SCHEDULE 4 - SURFACE RESTORATION AND MISCELLANEOUS

WORK INCLUDES REPAIR EFFORTS AT SURFACING OF TRENCHES AND ALSO IMPROVEMENTS TO EXISTING TANK ACCESS ROAD AND NEW ACCESS ROAD AT WELL SITES. SURFACING WILL BE EITHER ASPHALTIC CONCRETE - WITH CRUSHED BASE COURSE GRAVEL, GRAVEL SURFACE, DRY LAND GRASS, AND LAWN SODDING

DESIGN CRITERIA

TOTAL EQUIVALENT DESIGN POPULATION..... 225

WATER DEMAND

DESIGN PER CAPITA DEMAND.....150 GPCD
DESIGN AVERAGE DAILY DEMAND. ..... 33,750 GPD
DESIGN MAXIMUM DAILY DEMAND.....135,000 GPD
DESIGN PEAK HOURLY DEMAND.....5,640 GPH
DESIGN FIRE FLOW DEMAND. .....500 GPM - 2HRS MIN.

WATER STORAGE

31' DIAMETER - 28' HEIGHT.....NOMINAL 150,000 GALLONS

NOTES

REVIEW SPEC. DRAWINGS

THE ENGINEER HAS ENDEAVORED TO SHOW ON THE PLANS, ALL KNOWN UNDERGROUND UTILITIES AND SERVICE LINES FOR THE PURPOSE OF IDENTIFYING POTENTIAL CONFLICTS. THE PRESENTATION OF EXISTING UTILITIES IS NOT WARRANTED TO BE EITHER COMPLETE OR EXACT IN HORIZONTAL POSITION AND ELEVATION. AT EXPLORATORY LOCATIONS SPECIFIED, THE CONTRACTOR SHALL DETERMINE OR VERIFY UTILITY VERTICAL AND HORIZONTAL LOCATIONS PRIOR TO BEGINNING ANY PIPE INSTALLATIONS. THE CONTRACTOR SHALL BE RESPONSIBLE FOR VERIFYING ALL DATA WITH EACH RESPECTIVE UTILITY OWNER PRIOR TO BIDDING AND/OR INITIATING CONSTRUCTION. THE ENGINEER AND OWNER ACCEPT NO RESPONSIBILITY FOR THE ACCURACY OF UTILITY LOCATION DATA PRESENTED ON THE DRAWINGS. VARIANCES FROM LOCATION SHOWN ON ANY UTILITY CROSSED SHALL BE IMMEDIATELY BROUGHT TO THE ATTENTION OF THE ENGINEER IN WRITING. NOTE - SOME OF THE UTILITIES WERE MARKED AND SURVEYED IN FIELD, SOME WERE NOT MARKED IN FIELD AND ARE SHOWN ON PLANS UTILIZING EXISTING RECORD DRAWINGS OR UTILITY DRAWINGS, WHICH MAY NOT BE AS ACCURATE.

CONTRACTOR IS RESPONSIBLE FOR CONTACTING THE FOLLOWING EXISTING UTILITY COMPANIES. VERIFY THE EXTENT OF THE UTILITY CONFLICT CAUSED BY CONSTRUCTION OF THIS PROJECT BEFORE BIDDING PROJECT. THE FOLLOWING ARE THE UTILITY COMPANIES WITH PHONE NUMBERS FOR LOCAL CONTACTS:

TELEPHONE (FIBER OPTICS): 3-RIVERS COMMUNICATIONS - (406) 394-7807

ELECTRICAL: NORTHWESTERN ENERGY - (888) 467-2669

WATER: SCWD, KENT LUOMA, (406)590-5183 OR
PAT DARKO (406)590-5703

COUNTY ROADS (EAST HUNTER): RICK SCHUTE, (406)454-6913

BEFORE CONSTRUCTION STARTS, A COMMON LOCATE SERVICE IS AVAILABLE AT (800) 424-5555.

THE COORDINATION, COOPERATION, AND VERIFICATION WITH ALL AFFECTED UTILITY COMPANIES SHALL INCLUDE UNDERSTANDING THE CONCERNS FOR UTILITY PROTECTION, REQUIRED UTILITY RELOCATION, ADJUSTMENTS, SERVICE INTERRUPTIONS, OPERATIONS AND ANY SPECIAL REQUIREMENTS OF THE UTILITY COMPANY. CONTRACTOR SHALL TAKE RESPONSIBILITY FOR KNOWLEDGE OF BURIED UTILITY CONFLICTS, BE AWARE OF THE COST ASSOCIATED WITH BURIED UTILITIES, AND BID PROJECT ACCORDINGLY.

CONTRACTOR WILL RETAIN AND PROTECT THE EXISTING TELEPHONE (FIBER OPTICS), BURIED ELECTRICAL SERVICES IN PLACE. REPAIR OF ANY ACCIDENTALLY DAMAGED UTILITIES BY THIS CONSTRUCTION WILL BE THE INDIRECT RESPONSIBILITY OF THE CONTRACTOR. COORDINATION WITH THE UTILITY COMPANIES LISTED ABOVE WILL BE REQUIRED, PLUS ALL ADDITIONAL EFFORT TO MAINTAIN THESE UTILITIES IN THEIR EXISTING CONDITION. ANY WORK EFFORT TO CONSTRUCT AROUND THESE UTILITIES WILL BE THE RESPONSIBILITY OF THE CONTRACTOR AT NO ADDITIONAL COST TO THE OWNER BEYOND THE UNIT PRICES ALLOWED. SEE ALSO SPECIAL CONDITIONS RELATED TO UTILITIES WITHIN THE SPECIFICATIONS.

DRAWING OF RECORD
Substantial Completion: June 18, 2015
Contractor: Boland Construction, Inc.
THESE RECORD DRAWINGS HAVE BEEN NOTED * A.R. FOR MAJOR FIELD CHANGES FROM THE BID DESIGN AND FOR ACTUAL FIELD DIFFERENCES. THESE DRAWINGS HAVE BEEN PREPARED, IN PART, ON THE BASIS OF INFORMATION COMPILED BY OTHERS. THEY ARE NOT INTENDED TO REPRESENT IN DETAIL THE EXACT LOCATION, TYPE OF COMPONENT, NOR MANNER OF CONSTRUCTION. THE ENGINEER WILL NOT BE RESPONSIBLE FOR ANY ERRORS OR OMISSIONS WHICH HAVE BEEN INCORPORATED INTO THE RECORD DRAWINGS.

CONSTRUCTION NOTES

1. COORDINATE ALL PROJECT ACCESS, TOWN'S DOMESTIC WATER SUPPLY IMPACTS WITH THE SAND COULEE WATER DISTRICT (PHONE NUMBERS ARE LISTED ABOVE). ACCOMPLISHING AND SATISFACTORILY COORDINATING THIS WORK WILL ULTIMATELY BE CONTRACTOR'S RESPONSIBILITY.
2. ALL DAMAGED OR DISTURBED SURFACES SHALL BE RESTORED TO THEIR ORIGINAL CONDITION AT NO ADDITIONAL EXPENSE TO THE OWNER. THIS SHALL INCLUDE TRAVEL ROUTES.
3. THE CONTRACTOR SHALL VERIFY ALL EXISTING PIPE DIAMETER SIZES, PIPE TYPES, AND LENGTHS PRIOR TO INSTALLATION OF NEW PVC MAINS. CITY RECORDS OF WATER MAINS SHOW PIPE TYPE AS PVC AND ACP, - CONTRACTOR WILL NEED TO FIELD VERIFY. EXIST WATER SERVICES WILL BE POLY, PVC, OR GALVANIZED - NEW WATER PIPING SERVICE IS HDPE.
4. CONTRACTOR TO FIELD VERIFY LOCATIONS AND ELEVATIONS OF ALL EXISTING WATER MAINS AND VALVES PRIOR TO COMMENCEMENT OF WORK. CONTRACTOR MAY REQUEST (FROM ENGINEER) FOR EXPLORATORY EXCAVATION TIME TO LOCATE EXISTING WATER MAIN AT CRITICAL LOCATIONS. THIS EXPLORATORY EFFORT WILL BE LIMITED TO 20 HOURS. LOCATE EXIST WATER MAINS AND SERVICE PIPE PRIOR TO BEGINNING NEW CONSTRUCTION TO AID WITH TEMPORARY WATER EFFORT.
5. GROUNDWATER WAS NOT OBSERVED AND NOTED DURING GEOTECHNICAL REVIEW, EXCEPT AT "RUSTY DITCH" CREEK CROSSINGS. THE CONTRACTOR SHALL BE PREPARED FOR GROUND WATER AND DEWATERING EFFORTS DURING CONSTRUCTION NEAR THE CREEK.
6. THE CONTRACTOR SHALL VISIT THE PROJECT SITE AND UNDERSTAND SITE CONDITIONS PRIOR TO BIDDING THE WORK.
7. WITH ANY OPEN CUT WORK AT NEW WATER MAIN INSTALL, CONTRACTOR WILL NEED TO COMPLETE A "ONE CALL" LOCATE AND HAVE UTILITIES MARKED. CONTRACTOR WILL COMPLETE EXCAVATION WITH ANY UTILITY CONFLICTS (TRANSVERSE OR LONGITUDINAL CROSSINGS) AS FOUND AND/OR PER ANY UTILITY ALREADY SHOWN ON PLANS. CONTRACTOR MAY ALSO REQUEST OF ENGINEER TO RELOCATE NEW WATER MAIN IF RELOCATION ALLOWS FOR BETTER CONSTRUCTION AT THE FIBER OPTICS OR OTHER UTILITY CONFLICTS (EXPLORATION EFFORT AT THE PRIVATE UTILITY LOCATIONS WILL BE CONTRACTORS SOLE RESPONSIBILITY).
8. THE TOWN AND NCI HAVE FULL GEOTECHNICAL DOCUMENTS FROM HYDROMETRICS OF EXISTING GEOTECHNICAL DATA WHICH CONTRACTOR MAY REVIEW. CONTRACTORS MAY REQUEST THE ABBREVIATED COPY OF CORRESPONDING BORE HOLES AND LOG DATA.
9. AFTER INSTALLING NEW WATER MAINS/WATER SERVICES IN A NEW LOCATION, THE REPLACED EXISTING WATER MAIN/WATER SERVICE WILL BE CONSIDERED ABANDONED. ALL 4" DIAMETER AND LARGER ABANDONED WATER PIPES WILL BE PLUGGED AT ANY OPEN END WITH CONCRETE BY THE CONTRACTOR.
10. WATER SERVICE LINES ARE TO BE SOLID, JOINT-FREE LENGTHS OF NEW (HDPE) SERVICE PIPE FROM CORP STOP THROUGH METER VAULT, OR CURB STOP IF INSTALLING NEW CURB STOP OR VAULT ON TO CONNECTION WITH EXIST SERVICE LINE.
11. INSTALL ADDITIONAL FITTINGS, BLOWOFFS, VALVES, ETC. AS MAY BE NECESSARY TO ADEQUATELY FLUSH, TEST, AND DISINFECT THE NEW WATER LINES AND FITTINGS. DECHLORINATE THE DISINFECTED AND FLUSHED WATER TO MEET ALL APPLICABLE REQUIREMENTS AND PROPERLY DISPOSE OF SO AS NOT TO CAUSE A PROBLEM TO ADJACENT WATERWAYS OR PROPERTIES.
12. CONTRACTOR WILL BE PROVIDED PDF FILE ON THE OVERALL HORIZONTAL LAYOUT OF THIS DESIGN.

PLAN SHEET NOTES:

1. ONLY LIVE WATER SERVICES WILL BE REINSTATED. SEE PLANS FOR LOCATION WHERE "NO SERVICE" IS REQUIRED "X". PLANS MAY NOT DEPICT ALL SERVICES (LIVE OR INACTIVE) AND THE SERVICES SHOWN GRAPHICALLY ARE ONLY AN AID FOR CONSTRUCTION. CONTRACTOR IS RESPONSIBLE TO LOCATE THE EXIST WATER SERVICE CURB STOPS.
2. SEE SHEET D-17 FOR GENERAL WATER SERVICE IMPROVEMENTS WHICH IS TYPICAL ALL DISTRIBUTION SHEETS.
3. NATIVE SURFACING - THIS AREA WILL NOT REQUIRE SPECIAL SURFACING, ONLY THE "NATIVE" MATERIAL OF THE TRENCH BACKFILL.
4. NOTE, HORIZONTAL BENDS ARE SHOWN (AS IS THE HORIZONTAL LAYOUT ANGLE) NO VERTICAL BENDS ARE SHOWN - IF ALIGNMENT REQUIRES VERTICAL BEND THEN CONTRACTOR WILL NEED TO INSTALL ACCORDINGLY - NOTE THERE WILL BE NO EXTRA PAYMENT FOR ANY BENDS.
5. THE AERIAL PLAN VIEWS ARE ONLY PROVIDED AS AN AID FOR VIEWING, THE SCALE ON AERIAL PLANS IS NOT COMPLETELY ACCURATE COMPARED TO THE ACTUAL TOPOGRAPHIC SURVEY.

Revisions	By	Date
AS-RECORDED	KF	7/2015

File No.	Job No.
43.109	1207 1207-G3
Date	Scale
3/21/14	AS SHOWN

Professional Seal

MONTANA
John A Wells
4682 E
REGISTERED PROFESSIONAL ENGINEER

Engineers
Environmental Specialists
Planners
Designers
Surveyors

NCI Engineering

4509 North Star Boulevard
P.O. Box 6350
Great Falls, MT 59406
Phone 406-453-5478
Fax 406-453-2009

Owner

SAND COULEE WATER DISTRICT

Project Title

SAND COULEE WATER IMPROVEMENTS 2014

Sheet Title

NOTES, WORKSCOPE, DESIGN CRITERIA AND FUNDING

Sheet	Of
G-3	38

Copyright © 2015 NCI, All Rights Reserved

File # FILE #

QUANTITIES FOR WESTERLY

15 METER PITS
22 WATER SERVICE CONNECTIONS (1 ON EACH SIDE OF METER) TO EXIST WATER SERVICES ON EXIST 6" WATER MAIN
3 NEW FH ON EXISTING 6" PVC LINE
(SEE DISTRIBUTION SHEETS FOR ADDITIONAL ITEMS)

DRAWING OF RECORD
Substantial Completion: June 18, 2015
Contractor: Boland Construction, Inc.
THESE RECORD DRAWINGS HAVE BEEN NOTED TO REFLECT FIELD CHANGES FROM THE BID DESIGN AND FOR ADDITIONAL DETAIL. THESE DRAWINGS HAVE BEEN PREPARED, IN PART, ON THE BASIS OF INFORMATION COMPILED BY OTHERS. THEY ARE NOT INTENDED TO REPRESENT IN DETAIL THE EXACT LOCATION, TYPE OF CONSTRUCTION OR EXTENT OF CONSTRUCTION. THE ENGINEER WILL NOT BE RESPONSIBLE FOR ANY ERRORS OR OMISSIONS WHICH HAVE BEEN INCORPORATED INTO THE RECORD DRAWINGS.

WESTERLY ACCESS ROAD IMPROVEMENTS (SEE SHT T-2)

W-1 W-5 W-4
BH-3
BH-1
BH-2
NEW WATER TANK LOCATION
MB-2
EXISTING WATER TANK (TO BE ABANDONED)
6" TRANSITE
PROVIDE WATER METER ON EXISTING SERVICE TO HOUSE #31 - (WEST)
NO METER FOR HOUSE #27 - (WEST)
ROAD TO WATER TANK (SEE SHT T-1)
6" WATER ENDS WITH FLUSHING HYDRANT (REMOVE) (PROVIDE NEW FH)
REALIGN (NEW ¾" HDPE) W/ EXIST WATER SERVICE ABANDON 2" REUSE EXISTING CURBSTOP
PRESSURE REDUCING STATION (SEE SHT D-16)
SEE SHT D-15 FOR THESE THREE FH
MB-5
GRAVEL
GULCH LANE
EAST HUNTER
PAVEMENT
6" PVC
8"
4"
ASSUMED
WESTERLY CENTER
TRUE
35 37 39 41 47 49 51 53 55 56 57 63 65 71 73 482

LEGEND

EXISTING
- PROPERTY LINE
- DISTRICT BOUNDARY/ PLANNING BOUNDARY
- 6" WATER MAIN (EXISTING 1987 INSTALLATION BY DEQ MINING DIVISION)
- 4" WATER MAIN (EXISTING THIN WALLED PVC)
- 2" WATER MAIN
- 3/4" SERVICES
- FIRE HYDRANT
- GATE VALVE
- TRAIL/ROAD
- WELL & NUMBER

G = GARAGE/ SHED
H/63=HOUSE/#
'A' = ABANDONED
T = TRAILER
X NOT PLANNED FOR SERVICE

NEW
- 6" FH FEED
- 8" WATER MAIN
- FIRE HYDRANT
- GATE VALVE
- WS WATER SERVICE
- METER PIT/ SERVICE CONNECTION

DRILL HOLE AND # ALSO IF PIEZOMETER WAS INSTALLED

Revisions	By	Date
AS-RECORDED	KF	1/2015

File No.	Job No.
43.109	1207 1207-0-1
Date	Scale
3/21/14	AS SHOWN

Professional Seal
MONTANA
4682 E
REGISTERED PROFESSIONAL ENGINEER

Engineers
Environmental Specialists
Planners
Designers
Surveyors
NC Engineering
4509 North Star Boulevard
P.O. Box 6350
Great Falls, MT 59406
Phone 406-453-5478
Fax 406-453-2009

Owner
SAND COULEE WATER DISTRICT

Project Title
SAND COULEE WATER IMPROVEMENTS 2014

Sheet Title
OVERALL AERIAL WESTERLY

Sheet	Of
O-1	38

Copyright © 2015 NCI, All Rights Reserved
File # FILE #

DRAWING OF RECORD
Substantial Completion: June 18, 2015
Contractor: Boland Construction, Inc.

THESE RECORD DRAWINGS HAVE BEEN NOTED * A.R. FOR MAJOR FIELD CHANGES FROM THE BID DESIGN AND FOR ACTUAL FIELD DIFFERENCES.

THESE DRAWINGS HAVE BEEN PREPARED, IN PART, ON THE BASIS OF INFORMATION COMPILED BY OTHERS. THEY ARE NOT INTENDED TO REPRESENT IN DETAIL THE EXACT LOCATION, TYPE OF COMPONENT, NOR MANNER OF CONSTRUCTION. THE ENGINEER WILL NOT BE RESPONSIBLE FOR ANY ERRORS OR OMISSIONS WHICH HAVE BEEN INCORPORATED INTO THE RECORD DRAWINGS.

RUSTY DITCH

WESTERLY CENTRAL

EASTERLY CENTRAL

SEE SHT D-15

GULCH LANE

EAST HUNTER

ROSIE'S LANE

DADE LANE

MINER'S LANE

PAVED

520 FIRE HALL

CHURCH

ASSUMED TRUE

MB-7
MB-8
MB-9
MB-10
MB-11

63 65 67 73 75 77 79 81 515 516 518 520 522 524 525 526 528 531 537 85 90 95 100 105

QUANTITIES FOR CENTRAL

24 METER PITS
(1) INSTALL 2" METER IN FIRE HALL
(SEE DISTRIBUTION SHEETS FOR ADDITIONAL ITEMS)

Revisions	By	Date
AS-RECORDED	KF	7/2015

File No.	Job No.
43.109	1207 1207-0-2
Date	Scale
3/21/14	AS SHOWN

Professional Seal

MONTANA
John A. Neil
4682 E
REGISTERED PROFESSIONAL ENGINEER

Engineers
Environmental Specialists
Planners
Designers
Surveyors

NCI Engineering

4509 North Star Boulevard
P.O. Box 6350
Great Falls, MT 59406
Phone 406-453-5478
Fax 406-453-2009

Owner

SAND COULEE WATER DISTRICT

Project Title

SAND COULEE WATER IMPROVEMENTS 2014

Sheet Title

OVERALL AERIAL CENTRAL

Sheet	Of
O-2	38

Copyright © 2015 NCI, All Rights Reserved

File # FILE #

DRAWING OF RECORD
Substantial Completion: June 18, 2015
Contractor: Boland Construction, Inc.

THESE RECORD DRAWINGS HAVE BEEN NOTED * A.R. FOR MAJOR FIELD CHANGES FROM THE BID DESIGN AND FOR ACTUAL FIELD DIFFERENCES. THESE DRAWINGS HAVE BEEN PREPARED, IN PART, ON THE BASIS OF INFORMATION COMPILED BY OTHERS. THEY ARE NOT INTENDED TO REPRESENT IN DETAIL THE EXACT LOCATION, TYPE OF COMPONENT, NOR MANNER OF CONSTRUCTION. THE ENGINEER WILL NOT BE RESPONSIBLE FOR ANY ERRORS OR OMISSIONS WHICH HAVE BEEN INCORPORATED INTO THE RECORD DRAWINGS.

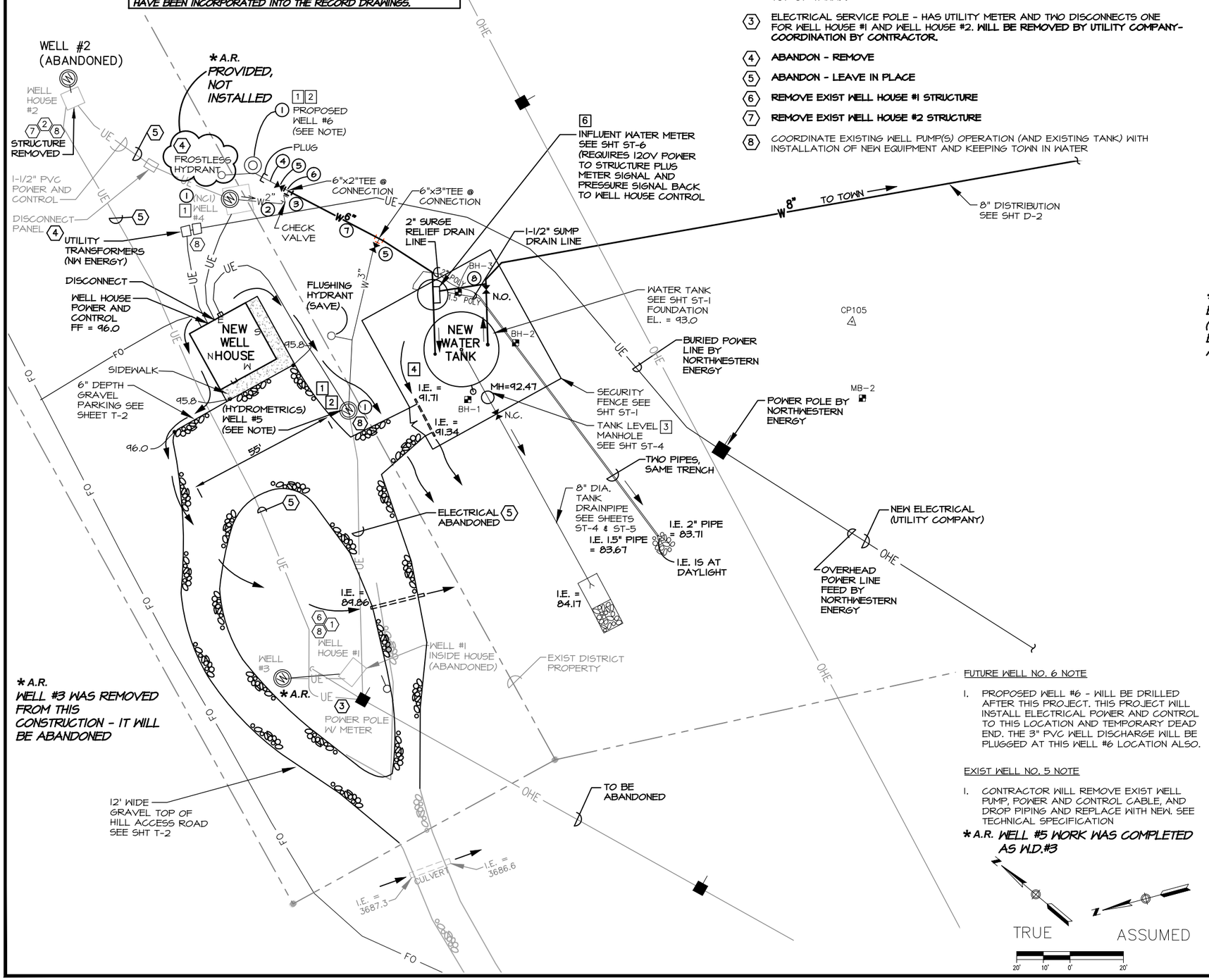

* A.R.
WELL #3 WAS REMOVED FROM THIS CONSTRUCTION - IT WILL BE ABANDONED

EXISTING NOTES (NEW WORK):

1. WELL #1 IS ALREADY ABANDONED. WELL HOUSE #1 HAS CONTROLLER FOR WELLS #3 & #5, CONTROL IS SINGLE ELECTRODE WITH TIMER (5 MINUTE IS RUN TIME SETTING NOW WITH A TANK ELECTRODE 2' FROM TOP OF TANK - TRYING TO MAINTAIN 2' BELOW TOP OF TANK.)
2. WELL #2 IS NOT USED AND WILL BE **ABANDONED BY DISTRICT.** WELL HOUSE #2 HAS CONTROLLER AND TIMER FOR WELL #4 THE TANK ELECTRODE IS SET 6' BELOW TOP OF TANK. .
3. ELECTRICAL SERVICE POLE - HAS UTILITY METER AND TWO DISCONNECTS ONE FOR WELL HOUSE #1 AND WELL HOUSE #2. **WILL BE REMOVED BY UTILITY COMPANY-COORDINATION BY CONTRACTOR.**
4. **ABANDON - REMOVE**
5. **ABANDON - LEAVE IN PLACE**
6. **REMOVE EXIST WELL HOUSE #1 STRUCTURE**
7. **REMOVE EXIST WELL HOUSE #2 STRUCTURE**
8. COORDINATE EXISTING WELL PUMP(S) OPERATION (AND EXISTING TANK) WITH INSTALLATION OF NEW EQUIPMENT AND KEEPING TOWN IN WATER

FUTURE WELL NO. 6 NOTE

1. PROPOSED WELL #6 - WILL BE DRILLED AFTER THIS PROJECT. THIS PROJECT WILL INSTALL ELECTRICAL POWER AND CONTROL TO THIS LOCATION AND TEMPORARY DEAD END. THE 3" PVC WELL DISCHARGE WILL BE PLUGGED AT THIS WELL #6 LOCATION ALSO.

EXIST WELL NO. 5 NOTE

1. CONTRACTOR WILL REMOVE EXIST WELL PUMP, POWER AND CONTROL CABLE, AND DROP PIPING AND REPLACE WITH NEW. SEE TECHNICAL SPECIFICATION

* A.R. WELL #5 WORK WAS COMPLETED AS W.O.#3

TRUE ASSUMED
20' 10' 0' 20'

TOPOGRAPHIC LEGEND

	NEW	EXIST
CHECK VALVE		
VALVE		
NORMALLY OPEN	N.O.	
NORMALLY CLOSED	N.C.	
WATER	W	W
OVERHEAD ELECTRIC	OHE	OHE
UNDERGROUND ELECTRIC	BE	BE
POWER POLE		
CONTROL POINT		CP
TEST HOLE & NUMBER		
PROPERTY LINE		
CONTOURS		3680
POINT ELEVATION	98.5	

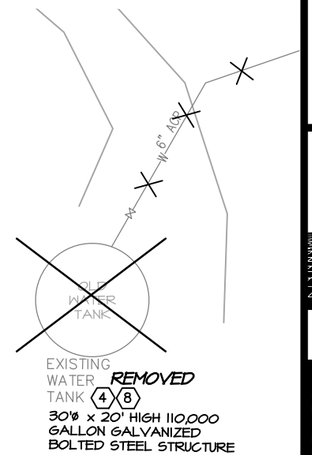

* A.R.
EXISTING WELL LINES (AND ELECTRICAL) TO EXISTING TANK ARE ABANDONED

EXISTING WATER TANK (4)(8) **REMOVED**
30'Ø x 20' HIGH 110,000 GALLON GALVANIZED BOLTED STEEL STRUCTURE

NEW MECHANICAL WORK

1. INSTALL FROSTLESS HYDRANT (SMOOTH NOSE) FOR WELL SAMPLING (TYP. @ 4 WELL LOCATIONS) SEE SPEC DWG #12.
2. 2" CL 160 PVC (6' BURY) (INLET)
3. 2" GV AND VALVE BOX
4. 3" CL 160 PVC (6' BURY)
5. 3" GV AND VALVE BOX
6. 3"X6" REDUCER
7. 6" C-900 PVC DR-14 (INLET)
8. 4" C-900 PVC DR-14 (TANK BY-PASS)

NEW ELECTRICAL FIELD WORK

1. PROVIDE NEW BURIED ELECTRICAL FEED WITH LOCAL DISCONNECT SWITCH AND PANEL (DETAIL 2/P-6) TO WELL PUMP FROM WELL HOUSE (TYP. @ 3 WELL LOCATIONS: #4, #5 & #6)
2. PROVIDE LEVEL TRANSDUCER FOR WELLS #5 AND #6 WELLS TO MONITOR GROUND WATER ELEVATION. RUN CONTROL WIRES BACK TO WELL HOUSE (INSTALL IN #5, JUST FURNISH FOR #6)
3. PROVIDE LEVEL TRANSDUCER IN TANK LEVEL MANHOLE TO MONITOR TANK WATER ELEVATION. RUN CONTROL WIRES BACK TO WELL HOUSE
4. PROVIDE NEW BURIED ELECTRICAL FEED TO TANK MIXER * A.R. DISCONNECT ON OUTSIDE OF TANK
5. THE NEW BURIED ELECTRICAL FEEDS AND CONTROL LINES NOT ALL SHOWN ON THIS PLAN
6. PROVIDE NEW BURIED ELECTRICAL FEED TO WATER METER MANHOLE

WATER TANK HILL SITE PLAN

Revisions	By	Date
AS-RECORDED	KF	7/2015

File No.	Job No.
43.109	1207 1207-P-1
Date	Scale
3/21/13	AS SHOWN

Professional Seal
MONTANA
John A. Nell
4682 E
REGISTERED PROFESSIONAL ENGINEER

Engineers
Environmental Specialists
Planners
Designers
Surveyors
NCI Engineering
4509 North Star Boulevard
P.O. Box 6350
Great Falls, MT 59406
Phone 406-453-5478
Fax 406-453-2009

Owner
SAND COULEE WATER DISTRICT

Project Title
SAND COULEE WATER IMPROVEMENTS 2014

Sheet Title
PUMPING (WELL HOUSE) WATER TANK HILL SITE PLAN

Sheet	Of
P-1	38

Copyright © 2015 NCI, All Rights Reserved
File # FILE #

ARCHITECTURAL/STRUCTURAL NOTES

I. GOVERNING CODES:
- A. UNIFORM BUILDING CODE, MOST CURRENT EDITION
- B. ACI 318-83, 315-80
- C. AISC MANUAL OF STEEL CONSTRUCTION 8TH EDITION

II. STRENGTH OF MATERIALS:

	F'C	SLUMP
CONCRETE:		
WALLS & SLABS	4000 PSI	2" TO 4" MAX.

III. REINFORCING CONCRETE:
- A. DETAILING OF REINFORCING WILL BE IN ACCORDANCE WITH THE LATEST A.C.I. DETAILING MANUAL.
- B. CLEAR CONCRETE COVER FOR REINFORCING SHALL BE AS FOLLOWS UNLESS NOTED OTHERWISE ON THE DRAWINGS:
  FOOTINGS: 3" FROM BOTTOM AND SIDES
  STEM WALLS: 2" FROM SIDES AND 2" FROM TOP AND BOTTOM
  SLABS ON GRADE: AS NOTED ON DRAWINGS
  STRUCTURAL SLABS: 3/4"
  BEAMS AND COLUMNS: 1 1/2" FOR PRIMARY REINFORCED TIES, STIRRUPS AND SPIRALS
- C. WHERE LAPPED SPLICES IN REINFORCING OCCUR, THE MINIMUM LAP SHALL BE MADE AS FOLLOWS UNLESS NOTED OTHERWISE:
  VERTICAL REINFORCING: 30 BAR DIA. OR 18" MINIMUM
  HORIZONTAL REINFORCING: 30 BAR DIA. OR 18" MINIMUM
  HORIZONTAL CORNER BARS: 30 BAR DIA. OR 18" MINIMUM
- D. ALL HORIZONTAL REINFORCING IN FOOTINGS, WALLS AND BEAMS SHALL BE CONTINUOUS AROUND CORNERS (OR AT WALL INTERSECTIONS) OR HAVE CORNER BARS OF THE SAME SIZE AND SPACING AS THE HORIZONTAL BARS AND LAP A MINIMUM OF 30 BAR DIAMETERS OR 18" MINIMUM, UNLESS NOTED OTHERWISE.
- E. FORM TIES SHALL BE EITHER OF THE THREADED OR SNAP OFF TYPE SO THAT NO METAL WILL BE LEFT WITHIN 1" OF THE SURFACE OF THE WALL. FOLLOWING REMOVAL OF FORM TIES, RECESSES ARE TO BE CAREFULLY FILLED AND POINTED WITH MORTAR.

IV. STRUCTURAL AND MISCELLANEOUS STEEL:
- A. ALL STRUCTURAL AND MISCELLANEOUS STEEL MEMBERS, SHAPES AND CONNECTIONS SHALL CONFORM TO ASTM A36.
- B THE CONTRACTOR SHALL BE RESPONSIBLE FOR CHECKING THE ARCHITECTURAL DRAWINGS FOR ALL MISCELLANEOUS STEEL.
- C. BOLTS SHALL BE STAINLESS STEEL AND CONFORM TO ASTM A307 BOLTS UNLESS OTHERWISE, WITH SIZES AS SHOWN ON THE DRAWINGS. ANCHOR BOLTS EMBEDDED IN CONCRETE SHALL BE STAINLESS STEEL ASTM A307 BOLTS OR A36 THREADED BARS
- D. ALL WELDING SHALL BE DONE BY CERTIFIED WELDERS AND SHALL BE IN ACCORDANCE WITH THE LATEST STANDARDS OF THE AWS AND SPECIFICATIONS.

V. MASONRY:
- A. ALL MASONRY UNITS SHALL BE TYPE I, GRADE N UNITS WITH TYPE S MORTAR. f'_m = 1500 PSI FULLY GROUTED
- B. CELLS CONTAINING REBAR SHALL BE GROUTED SOLID FROM THE BOTTOM TO THE TOP OF THE WALL IN ACCORDANCE WITH UBC REGULATION. BOTTOM OF WALLS AT ALL CELLS TO BE GROUTED WHERE THE GROUT POUR EXCEEDS 4' IN HEIGHT.
- C. LAP ALL BARS 40 DIAMETERS OR 25" MINIMUM UNLESS OTHERWISE NOTED.

DRAWING OF RECORD
Substantial Completion: June 18, 2015
Contractor: Boland Construction, Inc.
*THESE RECORD DRAWINGS HAVE BEEN NOTED * A.R. FOR MAJOR FIELD CHANGES FROM THE BID DESIGN AND FOR ACTUAL FIELD DIFFERENCES. THESE DRAWINGS HAVE BEEN PREPARED, IN PART, ON THE BASIS OF INFORMATION COMPILED BY OTHERS. THEY ARE NOT INTENDED TO REPRESENT IN DETAIL THE EXACT LOCATION, TYPE OF COMPONENT, NOR MANNER OF CONSTRUCTION. THE ENGINEER WILL NOT BE RESPONSIBLE FOR ANY ERRORS OR OMISSIONS WHICH HAVE BEEN INCORPORATED INTO THE RECORD DRAWINGS.*

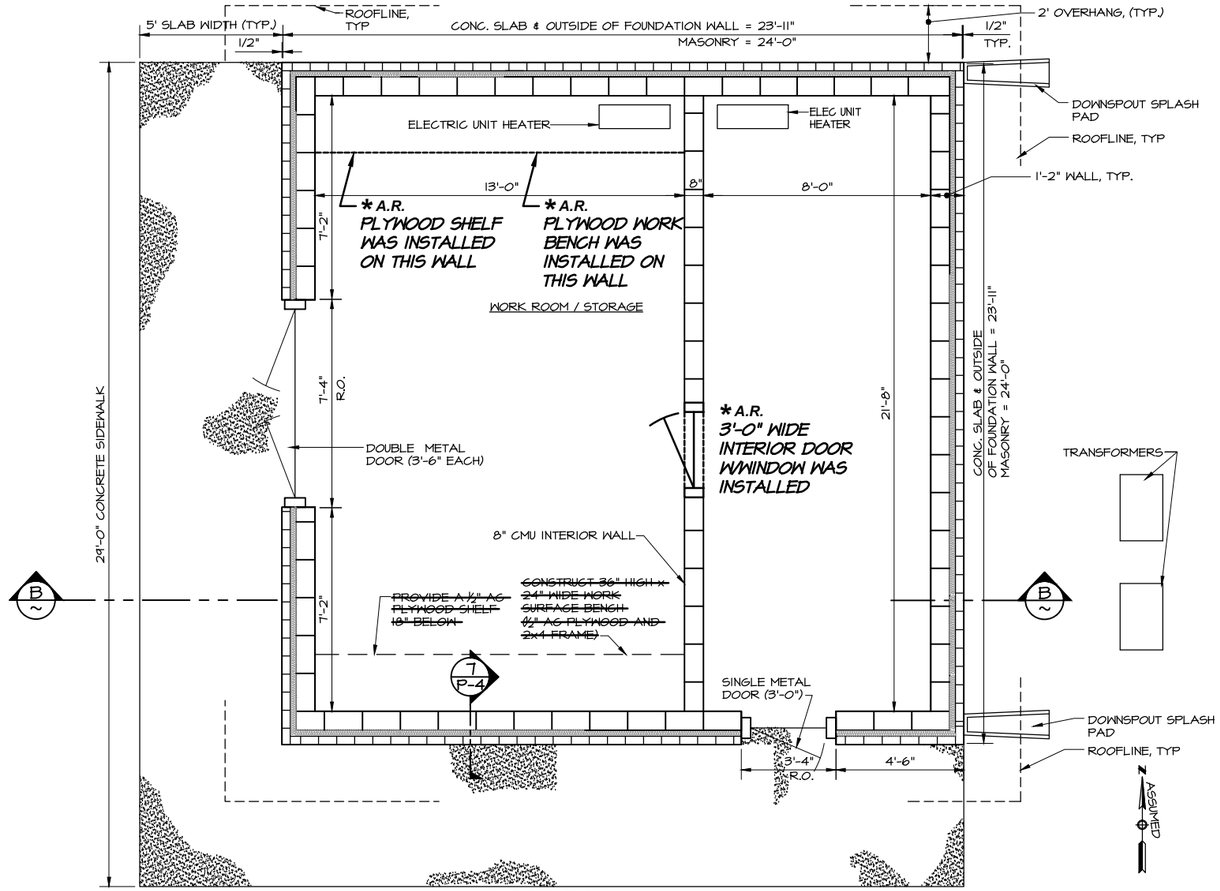

Revisions	By	Date
AS-RECORDED	KF	7/2015

File No.	Job No.
43.109	1207 1207-P-2
Date	Scale
3/21/14	AS SHOWN

Professional Seal
MONTANA
John A. Neis
4682 E
REGISTERED PROFESSIONAL ENGINEER

Engineers
Environmental Specialists
Planners
Designers
Surveyors
NCI Engineering
4509 North Star Boulevard
P.O. Box 6350
Great Falls, MT 59406
Phone 406-453-5478
Fax 406-453-2009

Owner
SAND COULEE WATER DISTRICT

Project Title
SAND COULEE WATER IMPROVEMENTS
2014

Sheet Title
PUMPING (WELL HOUSE)
ARCHITECTURAL PLAN

Sheet	Of
P-2	38

Copyright © 2015 NCI, All Rights Reserved
File # FILE #

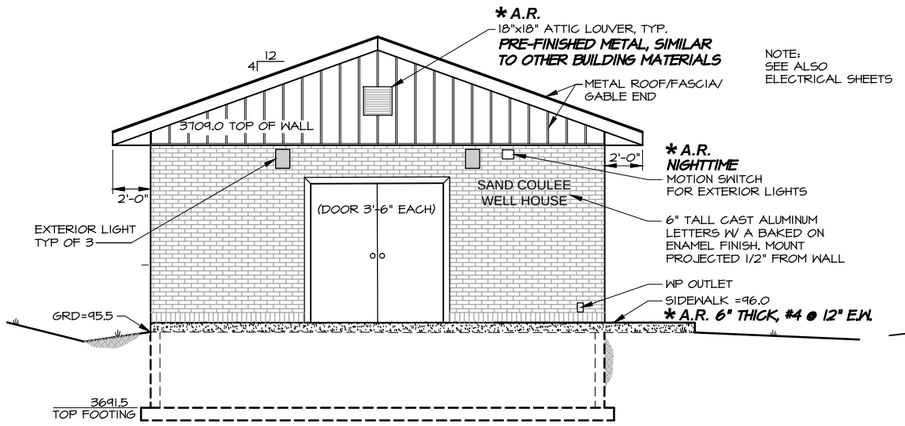

WEST ELEVATION

1/2"=1'-0"

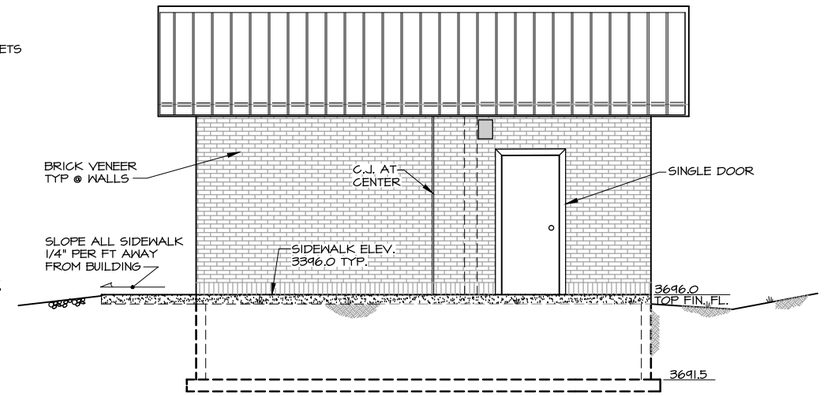

SOUTH ELEVATION

1/2"=1'-0"

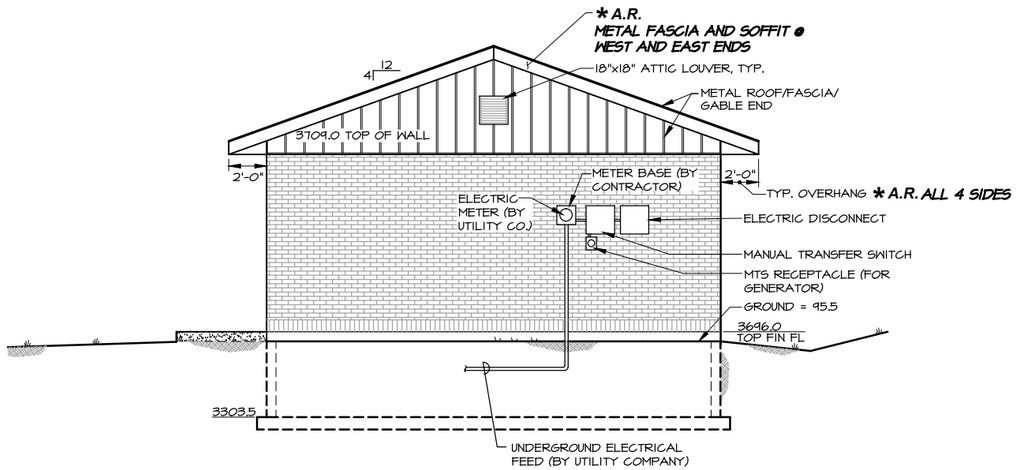

EAST ELEVATION

1/2"=1'-0"

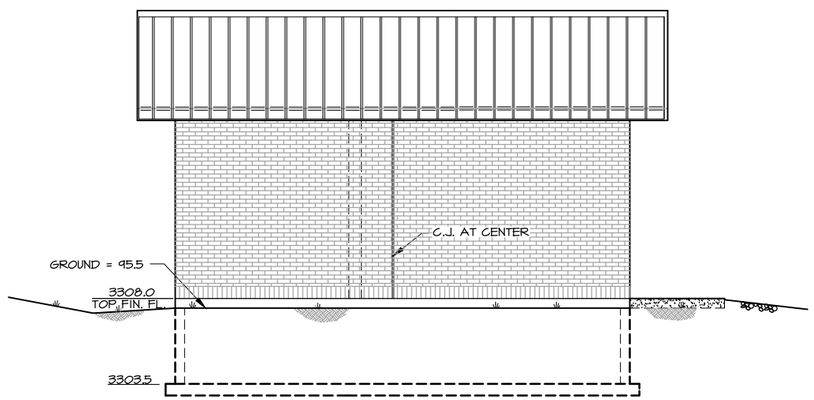

NORTH ELEVATION

1/2"=1'-0"

ELEVATIONS

DRAWING OF RECORD

Substantial Completion: June 18, 2015
Contractor: Boland Construction, Inc.

*THESE RECORD DRAWINGS HAVE BEEN NOTED * A.R. FOR MAJOR FIELD CHANGES FROM THE BID DESIGN AND FOR ACTUAL FIELD DIFFERENCES.*

THESE DRAWINGS HAVE BEEN PREPARED, IN PART, ON THE BASIS OF INFORMATION COMPILED BY OTHERS. THEY ARE NOT INTENDED TO REPRESENT IN DETAIL THE EXACT LOCATION, TYPE OF COMPONENT, NOR MANNER OF CONSTRUCTION. THE ENGINEER WILL NOT BE RESPONSIBLE FOR ANY ERRORS OR OMISSIONS WHICH HAVE BEEN INCORPORATED INTO THE RECORD DRAWINGS.

Revisions	By	Date
AS-RECORDED	KF	7/2015

File No.	Job No.
43.109	1207 1207-P-3
Date	Scale
3/21/14	AS SHOWN

Professional Seal

MONTANA JOHN G. NEAL 4682 E REGISTERED PROFESSIONAL ENGINEER

Engineers
Environmental Specialists
Planners
Designers
Surveyors

NCI Engineering

4509 North Star Boulevard
P.O. Box 6350
Great Falls, MT 59406
Phone 406-453-5478
Fax 406-453-2009

Owner

SAND COULEE WATER DISTRICT

Project Title

SAND COULEE WATER IMPROVEMENTS 2014

Sheet Title

PUMPING (WELL HOUSE) ELEVATIONS

Sheet	Of
P-3	38

Copyright © 2015 NCI, All Rights Reserved

File # FILE #

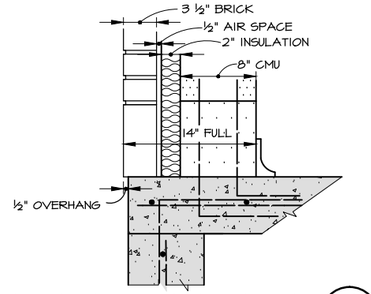

TYP. EXTERIOR WALL WIDTH — 7 / P-4

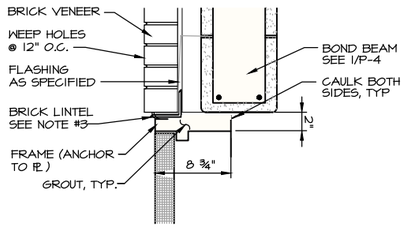

HEAD

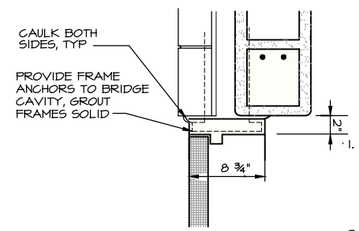

JAMB

NOTES

1. DOUBLE DOOR IS (2) 3'-6" X 7'-2" X 1 3/4" HM, SINGLE DOOR IS 3'-0" X 7'-0" X 1 3/4" HM, INSULATED, W/HM FRAME. SEE SPEC SECTION 08710 FOR HARDWARE
2. DOORS OPEN TOWARD OUTSIDE
3. LINTELS CARRY BRICK MASONARY ONLY. LINTEL SIZE EQUALS 3 1/2" X 3 1/2" X 1/4" FOR ALL OPENINGS
4. PROVIDE 1" OF BEARING EACH END FOR EACH FOOT OF SPAN. MINIMUM BEARING 6" EACH SIDE OF OPENING TYPICAL FOR BOTH DOORS

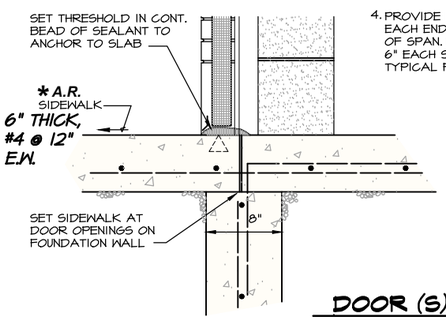

THRESHOLD

DOOR (S) — 6 / P-4

12" 6" 0

DRAWING OF RECORD
Substantial Completion: June 18, 2015
Contractor: Boland Construction, Inc.

*THESE RECORD DRAWINGS HAVE BEEN NOTED * A.R. FOR MAJOR FIELD CHANGES FROM THE BID DESIGN AND FOR ACTUAL FIELD DIFFERENCES. THESE DRAWINGS HAVE BEEN PREPARED, IN PART, ON THE BASIS OF INFORMATION COMPILED BY OTHERS. THEY ARE NOT INTENDED TO REPRESENT IN DETAIL THE EXACT LOCATION, TYPE OF COMPONENT, NOR MANNER OF CONSTRUCTION. THE ENGINEER WILL NOT BE RESPONSIBLE FOR ANY ERRORS OR OMISSIONS WHICH HAVE BEEN INCORPORATED INTO THE RECORD DRAWINGS.*

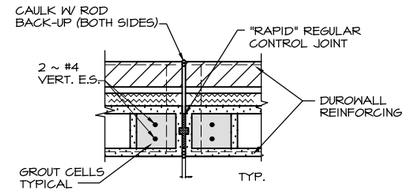

NOTE: HORIZ. REINFORCING IS NOT CONTINUOUS AT ALL CONTROL JOINTS.

TYP. MASONRY CONTROL JOINT — 5 / P-4

1" = 1'-0"

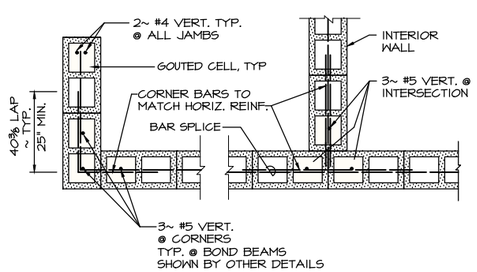

TYPICAL CMU PLAN — 4 / P-4

12" 6" 0" 12"

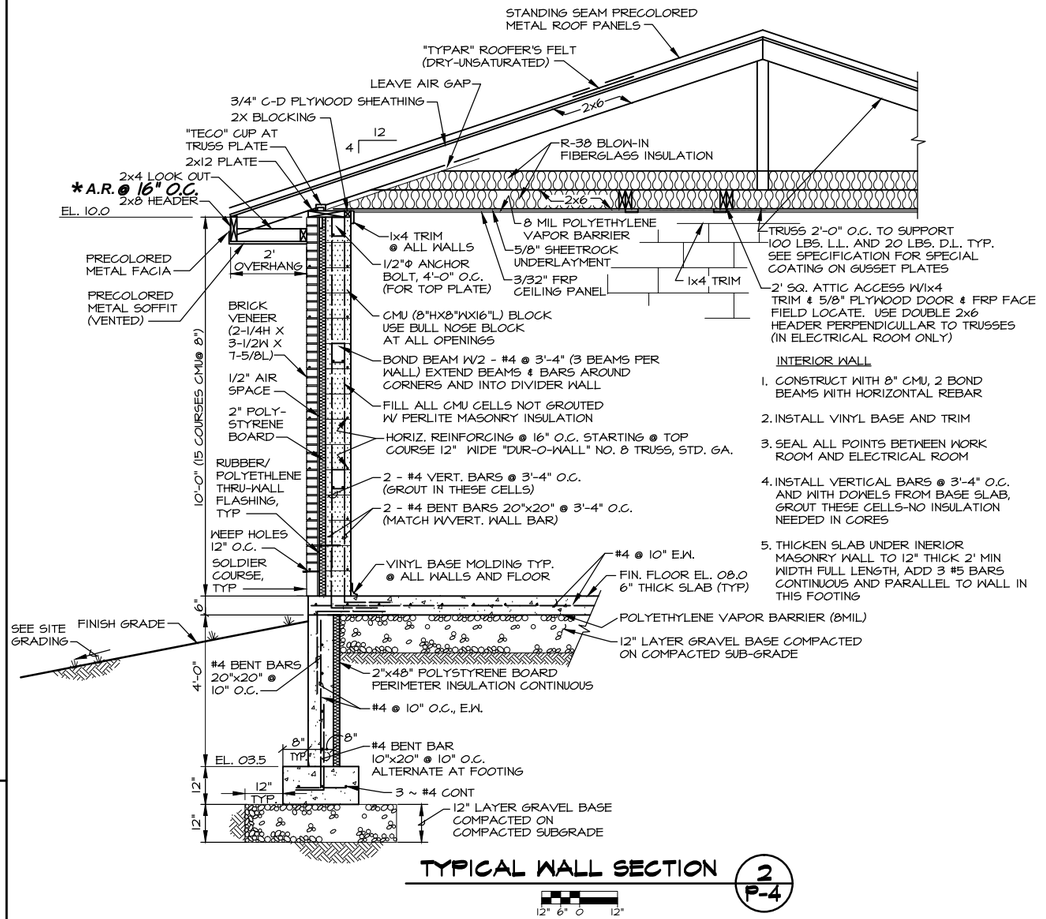

INTERIOR WALL

1. CONSTRUCT WITH 8" CMU, 2 BOND BEAMS WITH HORIZONTAL REBAR
2. INSTALL VINYL BASE AND TRIM
3. SEAL ALL POINTS BETWEEN WORK ROOM AND ELECTRICAL ROOM
4. INSTALL VERTICAL BARS @ 3'-4" O.C. AND WITH DOWELS FROM BASE SLAB, GROUT THESE CELLS-NO INSULATION NEEDED IN CORES
5. THICKEN SLAB UNDER INERIOR MASONRY WALL TO 12" THICK 2' MIN WIDTH FULL LENGTH, ADD 3 #5 BARS CONTINUOUS AND PARALLEL TO WALL IN THIS FOOTING

TYPICAL WALL SECTION — 2 / P-4

12" 6" 0 12"

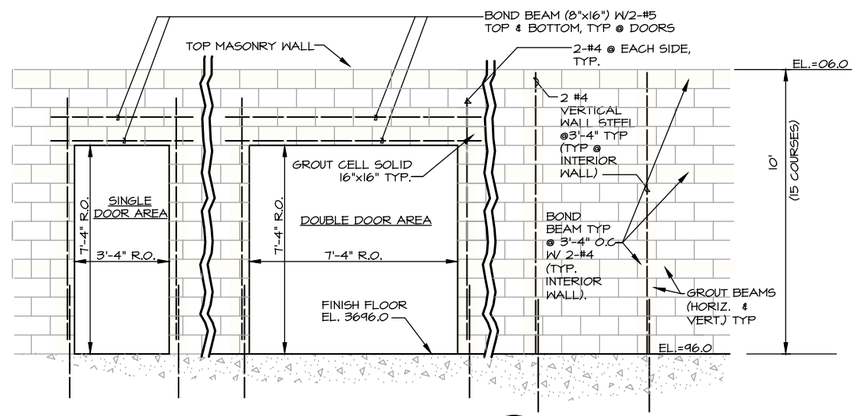

MASONRY WALL & DOOR OPENINGS — 1 / P-4

12" 6" 0 12"

MASONRY

Revisions	By	Date
AS-RECORDED	KF	7/2015

File No.	Job No.
43.109	1207 1207-P-4
Date	Scale
3/21/14	AS SHOWN

Professional Seal

MONTANA — John A. Vert — 4682 E — REGISTERED PROFESSIONAL ENGINEER

Engineers
Environmental Specialists
Planners
Designers
Surveyors

NCI Engineering

4509 North Star Boulevard
P.O. Box 6350
Great Falls, MT 59406
Phone 406-453-5478
Fax 406-453-2009

Owner

SAND COULEE WATER DISTRICT

Project Title

SAND COULEE WATER IMPROVEMENTS 2014

Sheet Title

PUMPING (WELL HOUSE) MASONARY

Sheet	Of
P-4	38

Copyright © 2015 NCI, All Rights Reserved

File # FILE #

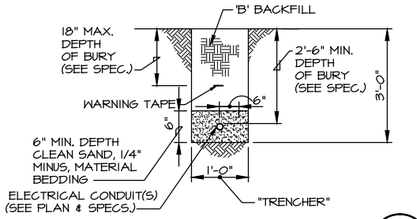

TYPICAL ELECTRICAL DISTRIBUTION TRENCH — 1 / P-5

N.T.S.

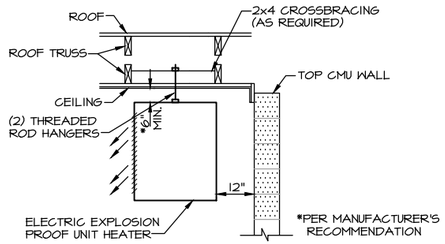

HEATER VERTICAL SECTION — 2 / P-5

* A.R. HIGH OUTPUT LED FIXTURE WAS INSTALLED

LOCAL LIGHT & EQUIPMENT SCHEDULE

LETTER SYMBOL	FIXTURE DESCRIPTION	MANUF.	CAT. NO.	VOLTAGE	LOCATION	TYPE	REMARKS
A	3-32W FLUORESCENT	LITHONIA	DMA-3-32	120V, 1Φ	CEILING	SURFACE	(7 FIXTURE) COLD BALLAST OS-1015
* A.R. B	~~HIGH PRESSURE SODIUM EXTERIOR FIXTURE~~	LITHONIA	TWP70S	120V, 1Φ	WALL	SURFACE	(3 FIXTURES) PROVIDE MOTION SENSOR (AUTO) OPERATION
EUH	ELECTRIC UNIT HEATER	BERKO OR QMARK	BERKO HUN 524	480V,3Φ		CEILING MOUNT	5KW W BERKO 24V THERMOSTAT, W TRANSFORMER, 45° TO 75° F

NOTE: MANUFACTURER'S NAME IS USED AS A MEANS OF DETERMINING THE QUALITY AND TYPE OF FIXTURE REQUIRED

PANEL BOARD: LOCAL POWER PANEL L.P. **CHAR:** 1Ø, 3W, 240/120 **LOCATION:** EXTERIOR WALL
FEEDERS: 350 MCM #2G THHN **BUS:** COPPER **MAINS:** 200A LUGS **MOUNTING:**
PANEL FEED: BOTTOM **RATING:** 100A **TYPE:** **MISC.:** W100A-2P MAIN BREAKER

LOAD	CONDUIT	CONDUCTORS	FRAME	CKT. NO.		FRAME	CONDUCTORS	CONDUIT	LOAD
LIGHTS (WORK ROOM)	3/4"	2-#12, #12G	20A-1P	1	2	15A-1P	CONTROL	3/4"	THERMOSTAT
LIGHTS (ELECTRICAL ROOM)	3/4"	2-#12, #12G	20A-1P	3	4				
				5	6				
RECEPTACLES (WORK ROOM)	3/4"	2-#12, #12G	20A-1P GFI	7	8	20A-1P			SPARE
RECEPTACLES (ELECTRICAL ROOM)	3/4"	2-#12, #12G	20A-1P GFI	9	10	40A-2P	2-#8, #10G	1"	3HP
RECEPTACLES (WORK ROOM)	3/4"	2-#12, #12G	20A-1P GFI	11	12				
CONTROLS	3/4"	2-#12, #12G	20A-1P	13	14				
MIXER - WATER TANK	3/4"	2-#12, #12G	20A-1P	15	16				
METER *	1"	CONTROL	20A-1P	17	18				
DEHUMIDIFIER / STRIP HEATER	1"	2-#12, #12G	20A-1P	19	20				

* CONTROL CABLE SHALL BE PAIR #16 GAUGE TO METER

ELECTRICAL NOTES

1. ALL CONDUIT SHALL BE CONCEALED, EITHER IN WALLS, SLAB, OR ROOF. CONDUIT SHALL BE EMT IN MASONRY WALLS, PVC OR RIGID IF IN CONCRETE OR UNDERGROUND. CONDUCTORS SHALL BE THHN INSULATED.
2. CONTRACTOR SHALL FURNISH AND INSTALL ALL CONTROL CONDUCTORS NECESSARY FOR CONTROLLER DEVICES TO OPERATE ELECTRICAL DEVICES THROUGHOUT. RACEWAY SIZING MAY BE INCREASED TO ALLOW FOR ADDITIONAL CONTROL WIRING. CONTROL WIRING SHALL BE INSTALLED WITHIN RACEWAY SEPARATE FROM POWER. CONTROL WIRING TO BE #18 GAUGE MIN. FOR 24V AND OTHER 120V CONTROL CIRCUITS SHALL BE 12 GAUGE.
3. ALL CIRCUITS SHALL BE GROUNDED. ALL ELECTRICAL WORK WILL COMPLY WITH N.E.C. ALL OUTLETS AND OTHER LOADS SHALL BE GROUND FAULT PROTECTED AS PER N.E.C.
4. ALL COVER PLATES FOR OUTLETS, SWITCHES, ETC. SHALL BE STAINLESS STEEL.
5. REFER TO SPECIFICATIONS FOR HEATING OPERATION. ELECTRICAL SUBCONTRACTOR SHALL PROVIDE CONDUCTOR, BREAKER AND CONDUIT TO HEATER FAN UNITS. MECHANICAL SUBCONTRACTOR SHALL FURNISH HEATER FAN UNITS. MECHANICAL SUBCONTRACTOR SHALL FURNISH ALL LOW VOLTAGE CONDUCTORS, 600 VOLT CONDUCTOR, EXTERNAL AND INTERNAL SWITCHES AND RELAYS, THERMOSTATS, CONDUIT AND ENCLOSURES AND ANY ANCILLARY COMPONENTS NECESSARY FOR THE OPERATION.
6. CONTRACTOR SHALL BALANCE LOAD BETWEEN PHASES.
7. CONTRACTOR TO VERIFY EXISTING ELECTRICAL USED TO RUN EXISTING WELL PUMPS PRIOR TO BIDDING, TO CONFIRM THE WORK REQUIRED TO ABANDON THE EXISTING PUMP MOTOR STARTERS AND TO RESERVICE THE SAME FROM THE NEW WELL HOUSE.
8. CONTRACT WILL ABANDON EXISTING ELECTRICAL SERVICE TO EXISTING WELL HOUSE #1 AND ULTIMATELY SECONDARY FEED AT EXISTING WELL HOUSE #2.

* A.R.
POWER WAS REVISED - SEE ALSO WD#1
PUMP MOTORS FOR WELLS #5 & #6 WERE CHANGED TO 480V; TRANSFORMER WAS ALSO INSTALLED TO DROP VOLTAGE TO POWER LOCAL PANEL; PUMPS #5 & #6 ALSO HAVE VFD INSTALLED FOR THEM

DRAWING OF RECORD
Substantial Completion: June 18, 2015
Contractor: Boland Construction, Inc.
*THESE RECORD DRAWINGS HAVE BEEN NOTED * A.R. FOR MAJOR FIELD CHANGES FROM THE BID DESIGN AND FOR ACTUAL FIELD DIFFERENCES. THESE DRAWINGS HAVE BEEN PREPARED, IN PART, ON THE BASIS OF INFORMATION COMPILED BY OTHERS. THEY ARE NOT INTENDED TO REPRESENT IN DETAIL THE EXACT LOCATION, TYPE OF COMPONENT, NOR MANNER OF CONSTRUCTION. THE ENGINEER WILL NOT BE RESPONSIBLE FOR ANY ERRORS OR OMISSIONS WHICH HAVE BEEN INCORPORATED INTO THE RECORD DRAWINGS.*

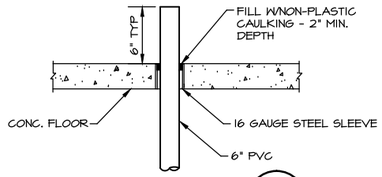

FLOOR SLEEVE — 3 / P-5

NO SCALE

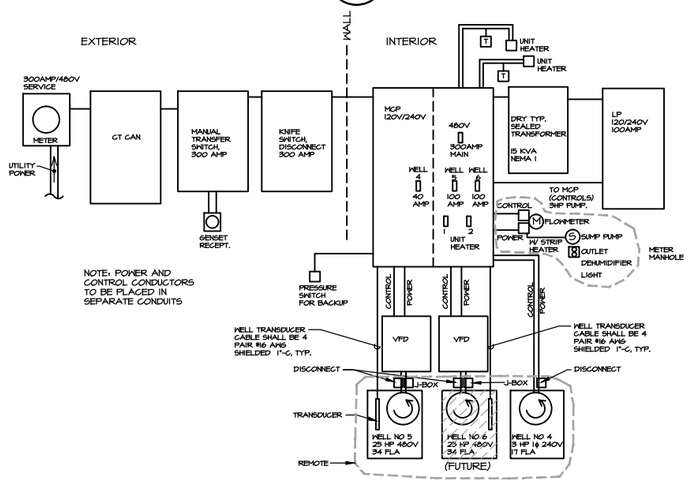

RISER DIAGRAM (ELECTRICAL SERVICE) — 4 / P-5

* A.R. DIAGRAM

LEGEND

- DUPLEX OUTLET
- SWITCH
- WP WEATHER PROOF OUTLET
- T THERMOSTAT

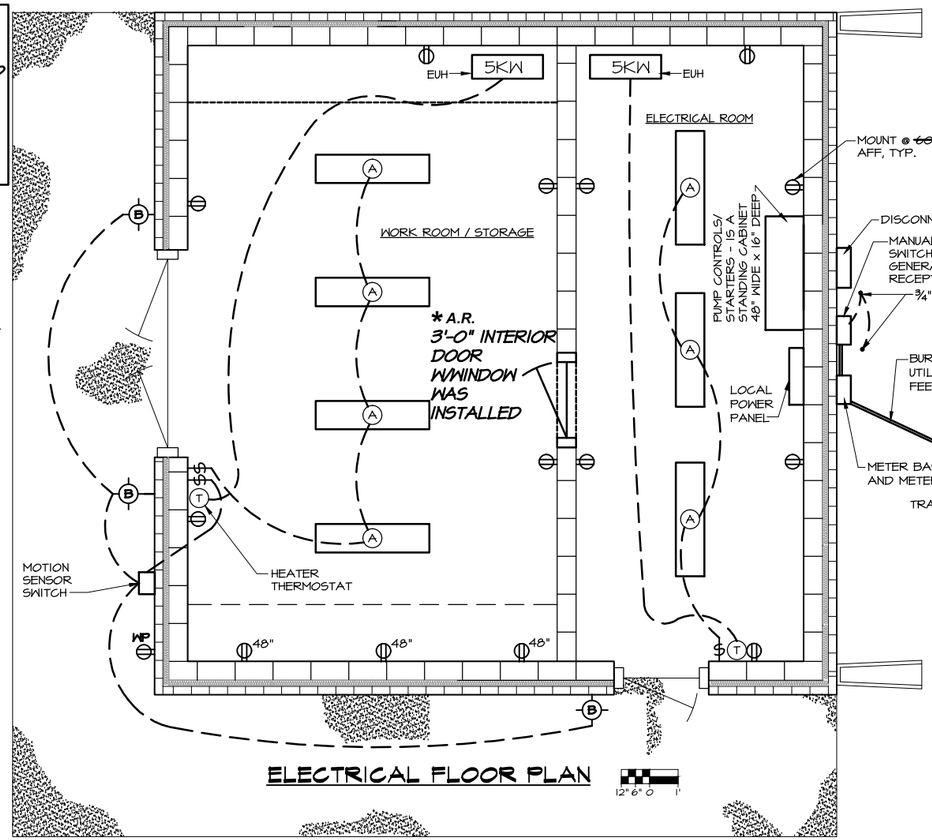

ELECTRICAL FLOOR PLAN

ELECTRICAL

Revisions	By	Date
AS-RECORDED	KF	7/2015

File No.	Job No.
43.109	1207 1207-P-5
Date	Scale
3/21/14	AS SHOWN

Professional Seal
MONTANA
John A. Neal
4682 E
REGISTERED PROFESSIONAL ENGINEER

Engineers
Environmental Specialists
Planners
Designers
Surveyors
NCI Engineering
4509 North Star Boulevard
P.O. Box 6350
Great Falls, MT 59406
Phone 406-453-5478
Fax 406-453-2009

Owner
SAND COULEE WATER DISTRICT

Project Title
SAND COULEE WATER IMPROVEMENTS 2014

Sheet Title
PUMPING (WELL HOUSE)
ELECTRICAL / CONTROL

Sheet	Of
P-5	38

Copyright © 2015 NCI, All Rights Reserved
File # FILE #

DRAWING OF RECORD
Substantial Completion: June 18, 2015
Contractor: Boland Construction, Inc.

*THESE RECORD DRAWINGS HAVE BEEN NOTED * A.R. FOR MAJOR FIELD CHANGES FROM THE BID DESIGN AND FOR ACTUAL FIELD DIFFERENCES. THESE DRAWINGS HAVE BEEN PREPARED, IN PART, ON THE BASIS OF INFORMATION COMPILED BY OTHERS. THEY ARE NOT INTENDED TO REPRESENT IN DETAIL THE EXACT LOCATION, TYPE OF COMPONENT, NOR MANNER OF CONSTRUCTION. THE ENGINEER WILL NOT BE RESPONSIBLE FOR ANY ERRORS OR OMISSIONS WHICH HAVE BEEN INCORPORATED INTO THE RECORD DRAWINGS.*

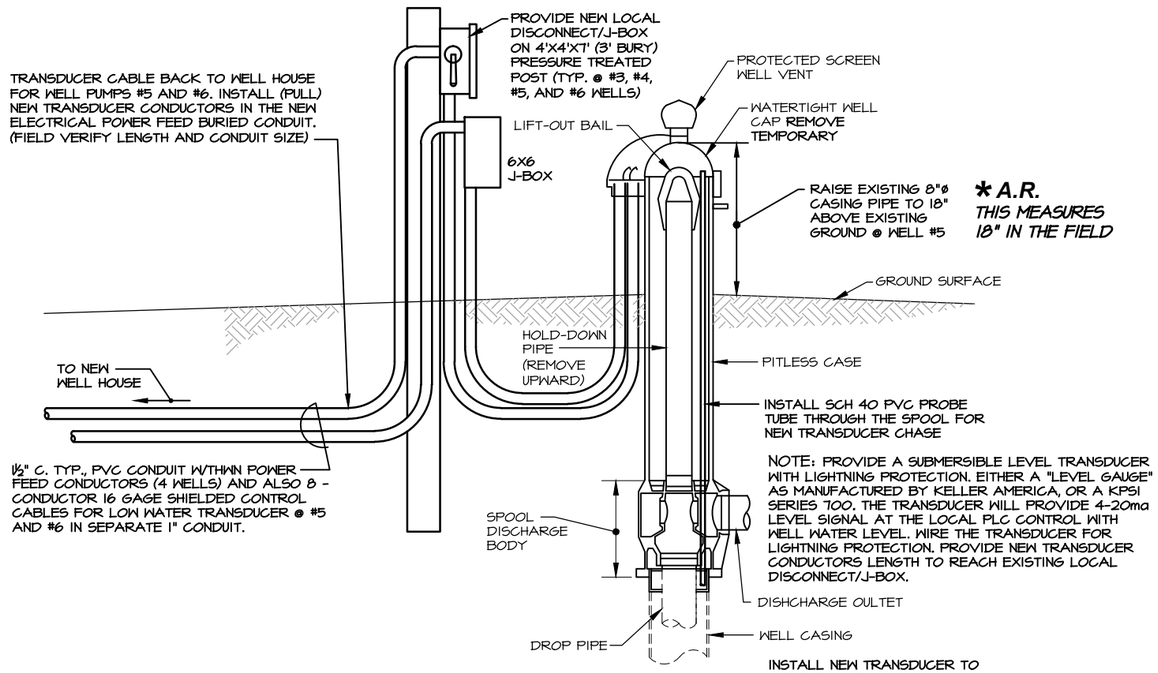

EXISTING PITLESS ADAPTOR AT WELLS #3, #4, AND #5

2 / P-6

(INSTALLING NEW PRESSURE TRANSDUCER AND TRANSDUCER CONDUCTORS INTO WELLS #5 AND #6 CASING

NOTE: WELLS #3, #4, AND #5 ARE EXISTING
WELL #6 IS A FUTURE WELL

* A.R.
WELLS #3 & #4 WILL BE ABANDONED

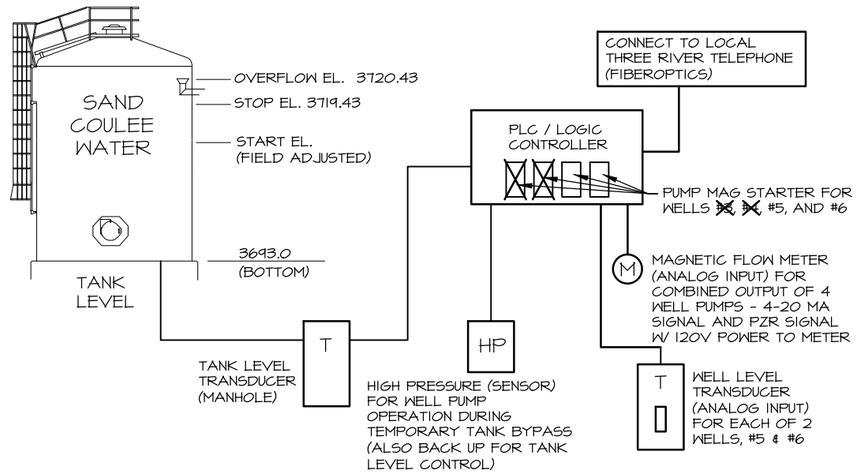

NOTE:
WELL #3 = EXIST (SHALLOW)
WELL #4 = EXIST (SHALLOW)
WELL #5 = EXIST (DEEP WELL)
WELL #6 = FUTURE (DEEP WELL)
4 WELLS

* A.R.
WELLS #3 AND #4 WILL NO LONGER BE USED

CONTROL SCHEMATIC

N.T.S.

1 / P-6

* A.R.
ALL ELECTRICAL WAS DELETED FOR WELL #3

SEE ALSO WD #1 FOR 480V ELECTRICAL

WATER SYSTEM CONTROL TELEMETRY FUNCTION

WELL HOUSE - NEW MASTER STATION
UNIT WILL PROVIDE CENTRALIZED CONTROL AND MONITORING OF THE WATER SYSTEM.
UNIT WILL INCLUDE NEW WEB BASED SCADA SYSTEM PROVIDING REMOTE NOTIFICATION OF ALARMS AND WEB BASED OPERATOR INTERFACE.
THE NEW CONTROLLER SHALL BE PROGRAMMED TO MONITOR; ONE (1) WATER TANK LEVEL (REMOTE TRANSDUCER 4-20MA SIGNAL); ONE (1) REMOTE FLOW METER (4-20 MA SIGNAL); ONE (1) HIGH PRESSURE (SENSOR) (4-20MA SIGNAL); TWO (2) WELL LEVELS (REMOTE TRANSDUCER 4-20MA SIGNAL). CONTROLLER SHALL PROVIDE ON/OFF CONTROL FOR FOUR (4) SUBMERSIBLE WELL PUMPS (SEE WELL DATA SCHEDULE) PUMP ALTERATION, LOW WELL CUT OUT AND RESTORE.
RECEIVE METERED FLOW INPUT AND WELL LEVEL INPUT.

REMOTE OPERATOR WORKSTATION
NEW LAPTOP COMPUTER SHALL BE PROVIDED TO ALLOW MONITORING OF THE NEW WEB BASED SCADA SYSTEM VIA INTERNET CONNECTION.
PROVIDE NEW WELL DRAWDOWN LEVEL MONITORING ON WELLS #5 AND #6.

TANK (150,000 GALLON) INSTALL LEVEL TRANSDUCER, INSTALL LEVEL TRANSDUCER TYPE OF WELL 5 AND 6. INSTALL PRESSURE SWITCHES FOR BACKUP PUMP CONTROL ON HIGH PRESSURE SIDE OF WELL PUMPS.

SEE SPECIFICATION FOR MORE DETAIL.

MISCELLANEOUS

Revisions	By	Date
AS-RECORDED	KF	7/2015

File No.	Job No.
43.109	1207 1207-P-6
Date	Scale
3/21/14	AS SHOWN

Professional Seal
MONTANA
John A. Vogt
4682 E
REGISTERED PROFESSIONAL ENGINEER

Engineers
Environmental Specialists
Planners
Designers
Surveyors
NCI Engineering
4509 North Star Boulevard
P.O. Box 6350
Great Falls, MT 59406
Phone 406-453-5478
Fax 406-453-2009

Owner
SAND COULEE WATER DISTRICT

Project Title
SAND COULEE WATER IMPROVEMENTS
2014

Sheet Title
PUMPING (WELL HOUSE)
MISCELLANEOUS DETAILS

Sheet	Of
P-6	38

Copyright © 2015 NCI, All Rights Reserved
File # FILE #

TANK INFO

- 31' DIAMETER
- 28' HEIGHT AT WALLS
- NOMINAL 150,000 GALLONS
- GLASS FUSED TO STEEL
- CONCRETE FLOOR AND FOUNDATION (DESIGNED BY TANK MFG) W/ EMBEDDED STARTER
- PROVIDE CATHODIC PROTECTION ON INTERIOR OF TANK
- SUBMERSIBLE MIXER

TO TRANSFORMERS

PUMPING
(WELL HOUSE)
SEE SHT
P-1 THROUGH P-6
FF = 96.0

95.9 TYP.

95.8

DRAWING OF RECORD
Substantial Completion: June 18, 2015
Contractor: Boland Construction, Inc.

THESE RECORD DRAWINGS HAVE BEEN NOTED * A.R. FOR MAJOR FIELD CHANGES FROM THE BID DESIGN AND FOR ACTUAL FIELD DIFFERENCES. THESE DRAWINGS HAVE BEEN PREPARED, IN PART, ON THE BASIS OF INFORMATION COMPILED BY OTHERS. THEY ARE NOT INTENDED TO REPRESENT IN DETAIL THE EXACT LOCATION, TYPE OF COMPONENT, NOR MANNER OF CONSTRUCTION. THE ENGINEER WILL NOT BE RESPONSIBLE FOR ANY ERRORS OR OMISSIONS WHICH HAVE BEEN INCORPORATED INTO THE RECORD DRAWINGS.

REVISED 10-1-14
DELETED WELL
#3 PIPING

~~2" PVC LINE FROM EXIST WELL #3~~

2" W

3" W

(N.O.)

(N.O.)

6" INLET PVC C-900

REVISED 10-1-14
PR AND SUMP
PUMP LINES
SEE SHEET P-1

2" PRESSURE RELIEF
DISCHARGE AND
1.5" SUMP DISCHARGE
FROM FLOW METER MH
I.E. ~~3.5~~ @ WALL
87.0

NORTHWEST ENERGY
NEW ELECTRICAL
FEED

BE

EXISTING 3"
LINE FROM
WELL #5

CUT SLOPE 3:1
TO EXISTING
GRADE

CUT LINE

FLUSHING
HYDRANT

3695

3994

3993

8' ø FLOW
METER MH (ST-6)
RIM EL = 92.8

PIPES @ 87.0
INSIDE M.H.

4" COUPLING

4" PVC C-900
TANK BYPASS

30"x30"
HATCH

6"x4"
REDUCER

8"x4" TEE

8" GV W/ BOX
(N.O.)

BEG. DISTRIBUTION @ 1+00

8" DISTRIBUTION
SEE SHEET P-2
PVC C-900

27'-6"

3992

5% SLOPE

15'

6" DIP INLET

8"
COUPLER

1+00

6" LAYER
CRUSHED BASE
COURSE GRAVEL

* A.R.
REMOVABLE
PIPE
BOLLARDS
INSTALLED

EXISTING
WELL #5
(HYDROMETRICS)

℄

3994

3993

5.5'

10.0'

¼" PER FOOT
INTO CENTER
SUMP

TANK
CENTER
POINT

8" DIP OUTLET

18'

ACCESS
LADDER AND
HATCHES @
ROOF

5% SLOPE

10.0' (TYP.)

5.5'

2" PRESSURE RELIEF
DISCHARGE AND
1" SUMP DISCHARGE
FROM FLOW METER MH

3692

I.E. =
91.71

12' GATE
(6' WINGS)

* A.R.
6" PVC CULVERT
INSTALLED

3693

12'-0"

27'-6"

8" DIP DRAIN

REVISED 10-1-14
PR AND SUMP
PUMP LINES
SEE SHEET P-1

I.E. 91.0
STRAIGHT
GRADE
FROM MH

8'x10'x1' DEEP
RIP-RAP AND
FABRIC SIMILAR
TO TANK
DISCHARGE
(ST-5)

8'

10'

3691

I.E. =
91.34

8" OVERFLOW

INLET BOX

COUPLER,
TYP.

24"x24"
HATCH

3692

10'-0"

8" PVC C900
SHT ST-4 & ST-5

* A.R.
DRAINAGE PAD
NOT CONSTRUCTED

REVISED 10-1-14
DELETED WELL
#3 PIPING

~~2" PVC LINE FROM EXIST WELL #3~~

SECURITY FENCE
SEE SPEC DWG 101F
(4 X 55' = 220')

TANK LEVEL MH
SHT ST-4
RIM EL. = 92.5

8" GV W/ BOX
(N.C.)

* A.R.
RUN P.R.
DISCHARGE &
SUMP DRAIN
INTO COULEE,
SEE SHEET P-1

* A.R.
2" P.R.
DISCHARGE AND
1.5" SUMP
DISCHARGE
FROM FLOW
METER M.H.

8" DRAIN

3691

TRUE ASSUMED

5' 2.5' 0' 5'

TANK SITE PLAN

Revisions	By	Date
AS-RECORDED	KF	7/2015

File No.	Job No.
43.109	1207 1207-ST-1
Date	Scale
10/1/14	AS SHOWN

Professional Seal

MONTANA
John C. Weil
4682 E
REGISTERED PROFESSIONAL ENGINEER

Engineers
Environmental Specialists
Planners
Designers
Surveyors

NCI Engineering

4509 North Star Boulevard
P.O. Box 6350
Great Falls, MT 59406
Phone 406-453-5478
Fax 406-453-2009

Owner

SAND COULEE
WATER
DISTRICT

Project Title

SAND COULEE
WATER
IMPROVEMENTS
2014

Sheet Title

STORAGE
TANK
SITE PLAN

Sheet	Of
ST-1	38

Copyright © 2015 NCI, All Rights Reserved

File # FILE #

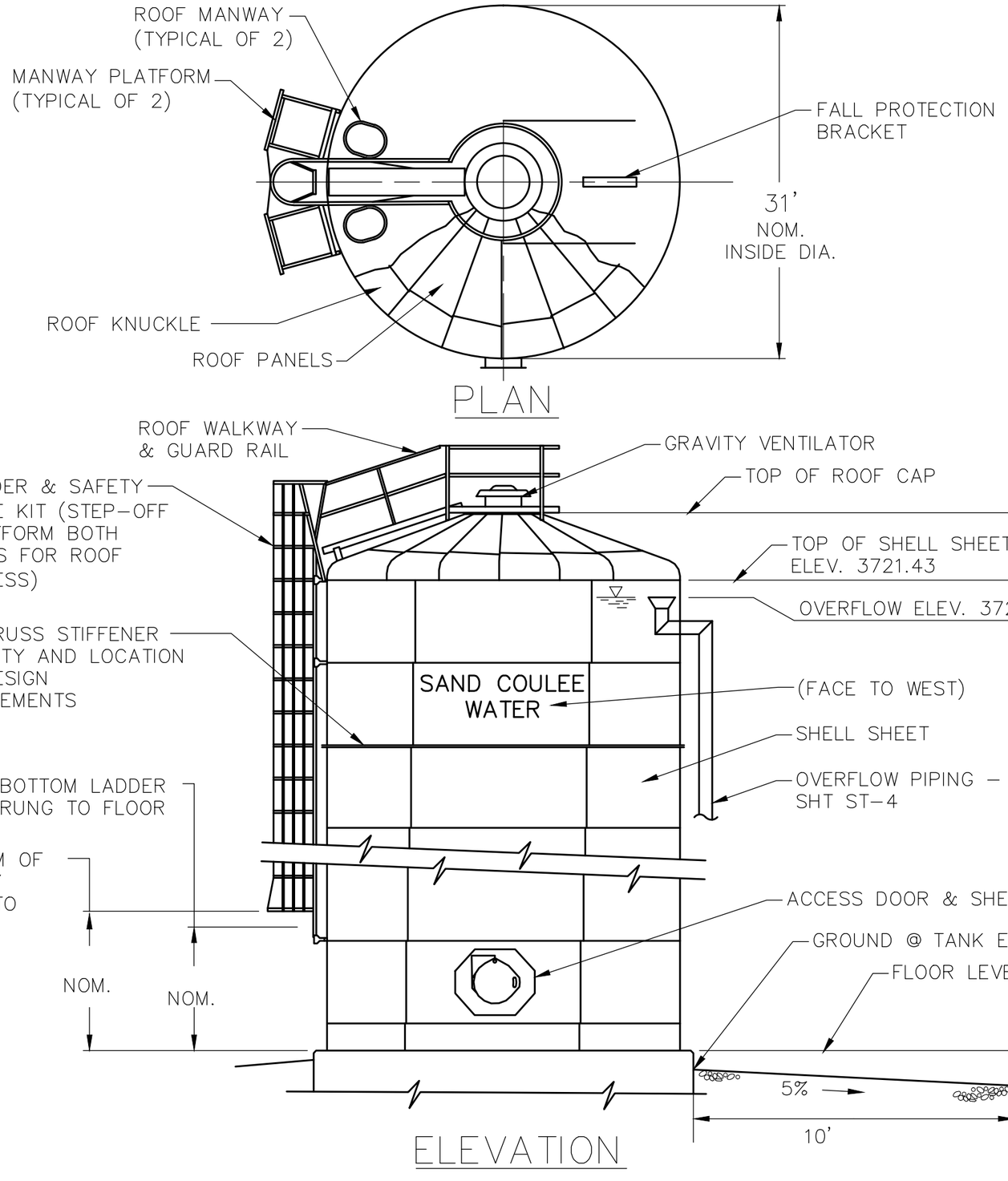

PLAN

ELEVATION

TANK
NTS

DRAWING OF RECORD
Substantial Completion: June 18, 2015
Contractor: Boland Construction, Inc.

THESE RECORD DRAWINGS HAVE BEEN NOTED * A.R. FOR MAJOR FIELD CHANGES FROM THE BID DESIGN AND FOR ACTUAL FIELD DIFFERENCES. THESE DRAWINGS HAVE BEEN PREPARED, IN PART, ON THE BASIS OF INFORMATION COMPILED BY OTHERS. THEY ARE NOT INTENDED TO REPRESENT IN DETAIL THE EXACT LOCATION, TYPE OF COMPONENT, NOR MANNER OF CONSTRUCTION. THE ENGINEER WILL NOT BE RESPONSIBLE FOR ANY ERRORS OR OMISSIONS WHICH HAVE BEEN INCORPORATED INTO THE RECORD DRAWINGS.

NOTE: SEE SPECIFICATIONS SECTION 13208 FOR MORE SPECIFIC DETAIL

Revisions	By	Date
AS-RECORDED	KF	7/2015

File No.	Job No.
43.109	1207 1207-ST-2
Date	Scale
3/21/14	AS SHOWN

Professional Seal

Engineers
Environmental Specialists
Planners
Designers
Surveyors

NCI Engineering

4509 North Star Boulevard
P.O. Box 6350
Great Falls, MT 59406
Phone 406-453-5478
Fax 406-453-2009

Owner

SAND COULEE WATER DISTRICT

Project Title

SAND COULEE WATER IMPROVEMENTS 2014

Sheet Title

STORAGE TANK PLAN AND ELEVATION

Sheet	Of
ST-2	38

Copyright © 2015 NCI, All Rights Reserved

File # FILE #

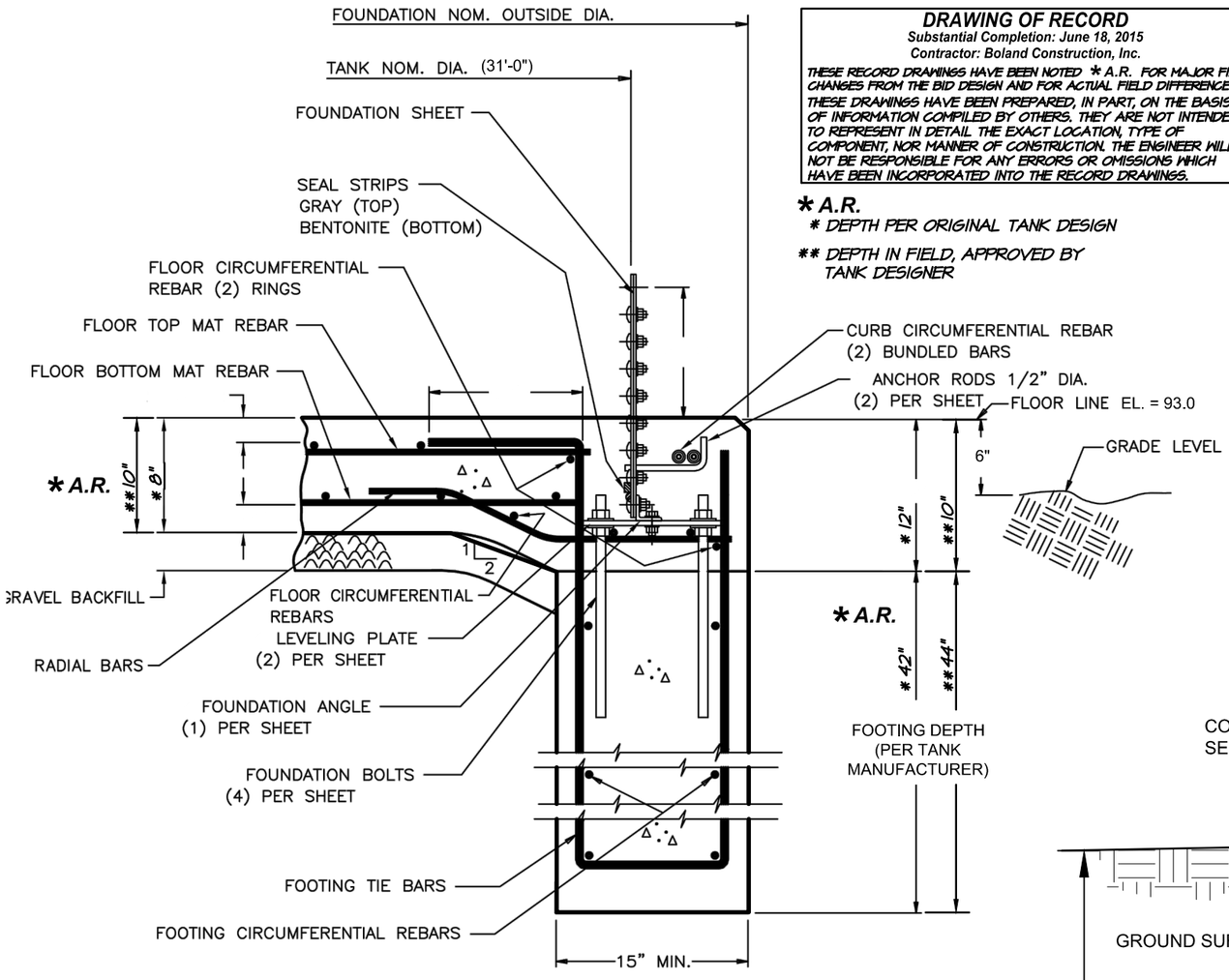

DRAWING OF RECORD
Substantial Completion: June 18, 2015
Contractor: Boland Construction, Inc.

*THESE RECORD DRAWINGS HAVE BEEN NOTED * A.R. FOR MAJOR FIELD CHANGES FROM THE BID DESIGN AND FOR ACTUAL FIELD DIFFERENCES. THESE DRAWINGS HAVE BEEN PREPARED, IN PART, ON THE BASIS OF INFORMATION COMPILED BY OTHERS. THEY ARE NOT INTENDED TO REPRESENT IN DETAIL THE EXACT LOCATION, TYPE OF COMPONENT, NOR MANNER OF CONSTRUCTION. THE ENGINEER WILL NOT BE RESPONSIBLE FOR ANY ERRORS OR OMISSIONS WHICH HAVE BEEN INCORPORATED INTO THE RECORD DRAWINGS.*

***A.R.**
* DEPTH PER ORIGINAL TANK DESIGN
** DEPTH IN FIELD, APPROVED BY TANK DESIGNER

TANK NOTE:

1) TANK FOUNDATION AND FLOOR WILL BE DESIGNED AND CONSTRUCTED BY TANK MANUFACTURER. THIS DETAIL IS PROVIDED ONLY AS AN EXAMPLE TO SHOW "POTENTIAL" FOOTING CONSTRUCTION.

SECTION THROUGH FOOTING
NTS

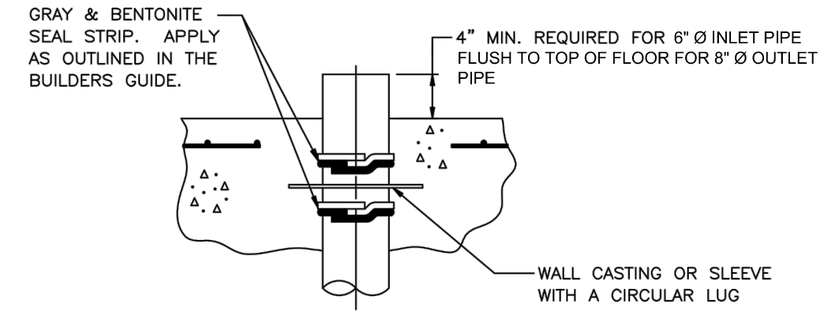

TYPICAL FLOOR PIPE PENETRATION WITHOUT SUMP
(6" Ø INLET AND 8" Ø OULET)
NTS

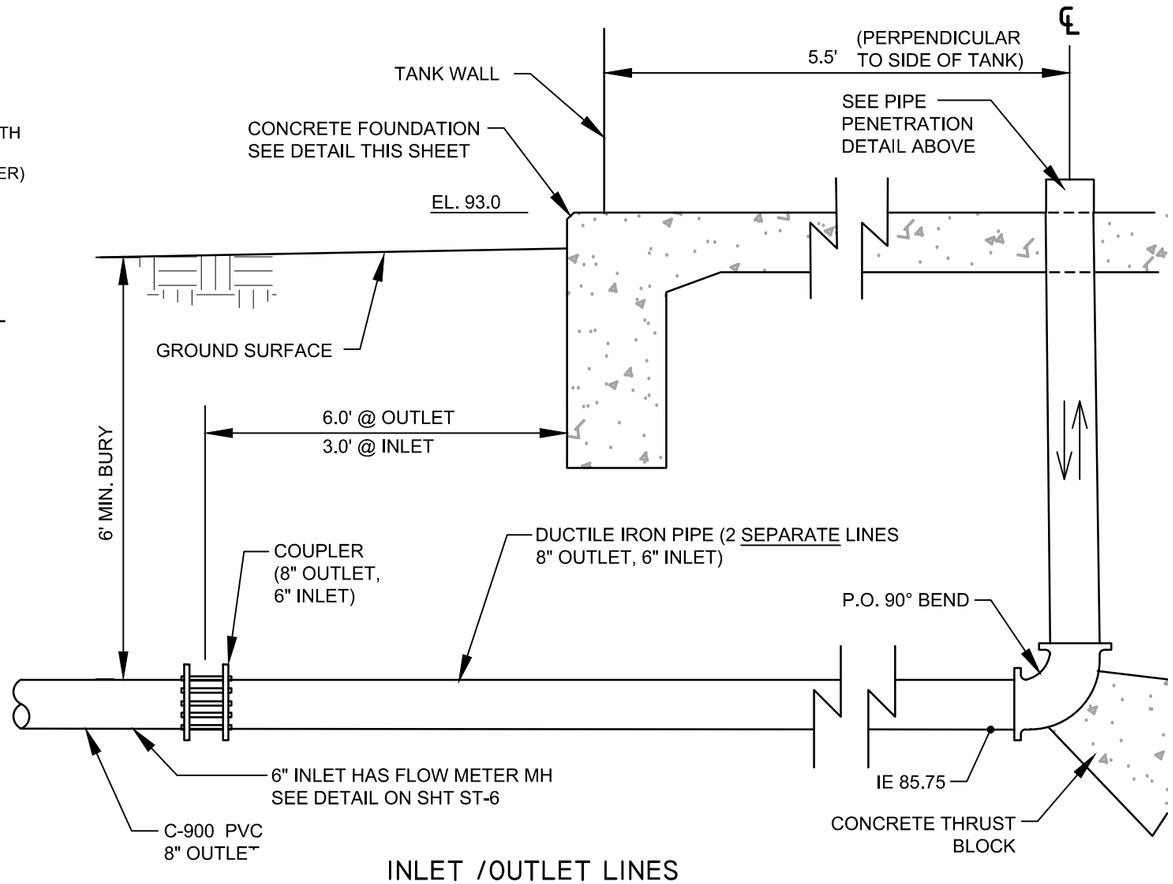

INLET /OUTLET LINES
NTS

Revisions	By	Date
AS-RECORDED	KF	7/2015

File No.	Job No.
43.109	1207 1207-ST-3
Date	Scale
3/21/14	AS SHOWN

Professional Seal

MONTANA
John A. Neil
4682 E
REGISTERED PROFESSIONAL ENGINEER

Engineers
Environmental Specialists
Planners
Designers
Surveyors

NCI Engineering

4509 North Star Boulevard
P.O. Box 6350
Great Falls, MT 59406
Phone 406-453-5478
Fax 406-453-2009

Owner

SAND COULEE WATER DISTRICT

Project Title

SAND COULEE WATER IMPROVEMENTS 2014

Sheet Title

STORAGE TANK INLET/OUTLET PIPING

Sheet	Of
ST-3	38

Copyright © 2015 NCI, All Rights Reserved

File # FILE #

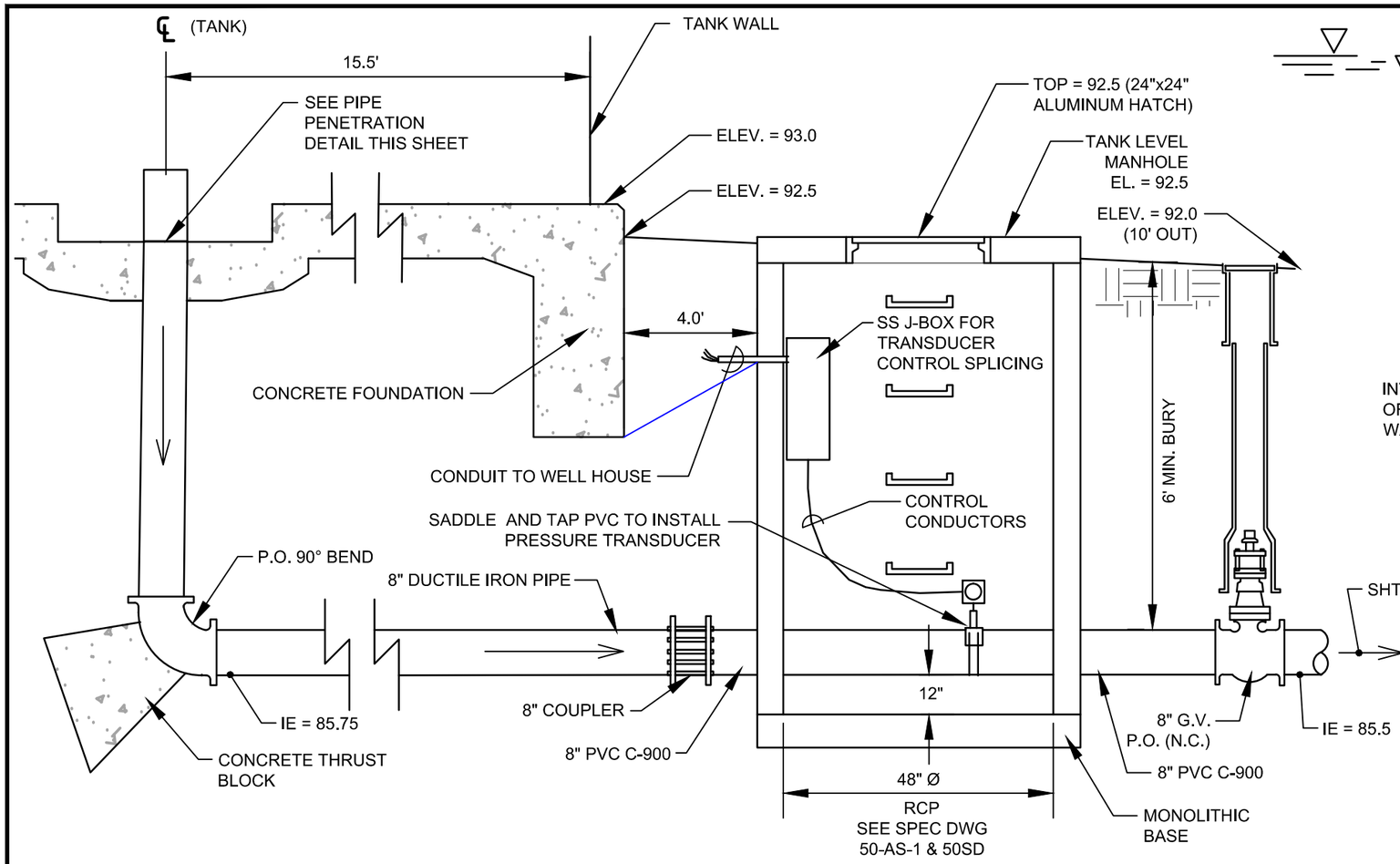

DRAIN LINE DETAIL

NTS

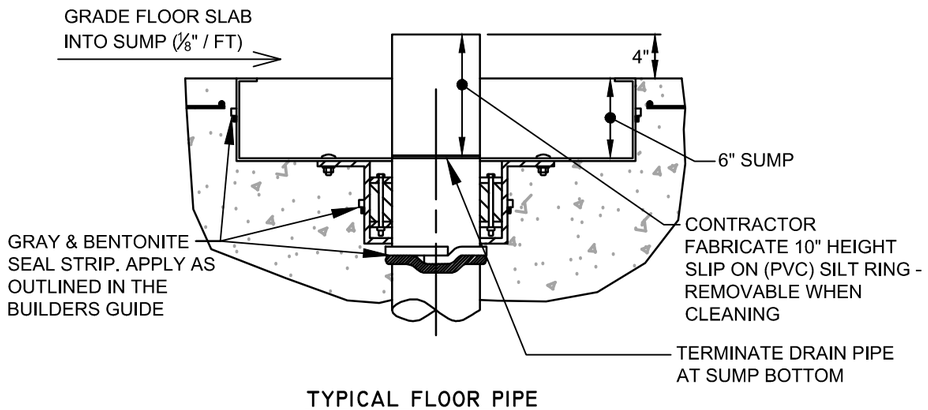

TYPICAL FLOOR PIPE PENETRATION WITH SUMP

NTS

DRAWING OF RECORD

Substantial Completion: June 18, 2015

Contractor: Boland Construction, Inc.

*THESE RECORD DRAWINGS HAVE BEEN NOTED * A.R. FOR MAJOR FIELD CHANGES FROM THE BID DESIGN AND FOR ACTUAL FIELD DIFFERENCES. THESE DRAWINGS HAVE BEEN PREPARED, IN PART, ON THE BASIS OF INFORMATION COMPILED BY OTHERS. THEY ARE NOT INTENDED TO REPRESENT IN DETAIL THE EXACT LOCATION, TYPE OF COMPONENT, NOR MANNER OF CONSTRUCTION. THE ENGINEER WILL NOT BE RESPONSIBLE FOR ANY ERRORS OR OMISSIONS WHICH HAVE BEEN INCORPORATED INTO THE RECORD DRAWINGS.*

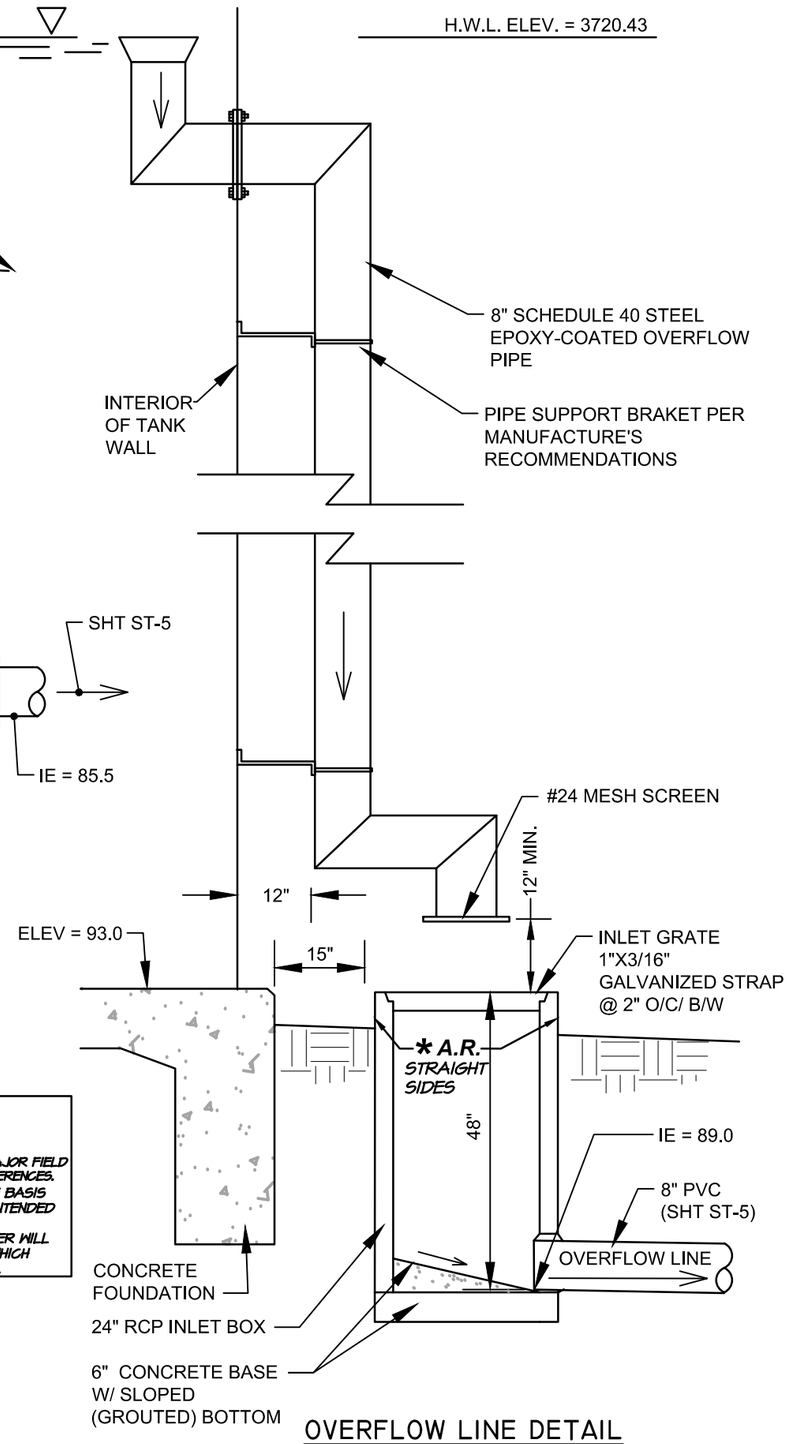

OVERFLOW LINE DETAIL

NTS

Revisions	By	Date
AS-RECORDED	KF	1/2015

File No.	Job No.
43.109	1207 1207-ST-4
Date	Scale
3/21/14	AS SHOWN

Professional Seal

MONTANA
John C. Wells
4682 E
REGISTERED PROFESSIONAL ENGINEER

Engineers
Environmental Specialists
Planners
Designers
Surveyors

NCI Engineering

4509 North Star Boulevard
P.O. Box 6350
Great Falls, MT 59406
Phone 406-453-5478
Fax 406-453-2009

Owner

SAND COULEE WATER DISTRICT

Project Title

SAND COULEE WATER IMPROVEMENTS 2014

Sheet Title

STORAGE TANK OVERFLOW AND DRAIN

Sheet	Of
ST-4	38

Copyright © 2015 NCI, All Rights Reserved

File # FILE #

DRAWING OF RECORD
Substantial Completion: June 18, 2015
Contractor: Boland Construction, Inc.

THESE RECORD DRAWINGS HAVE BEEN NOTED * A.R. FOR MAJOR FIELD CHANGES FROM THE BID DESIGN AND FOR ACTUAL FIELD DIFFERENCES. THESE DRAWINGS HAVE BEEN PREPARED, IN PART, ON THE BASIS OF INFORMATION COMPILED BY OTHERS. THEY ARE NOT INTENDED TO REPRESENT IN DETAIL THE EXACT LOCATION, TYPE OF COMPONENT, NOR MANNER OF CONSTRUCTION. THE ENGINEER WILL NOT BE RESPONSIBLE FOR ANY ERRORS OR OMISSIONS WHICH HAVE BEEN INCORPORATED INTO THE RECORD DRAWINGS.

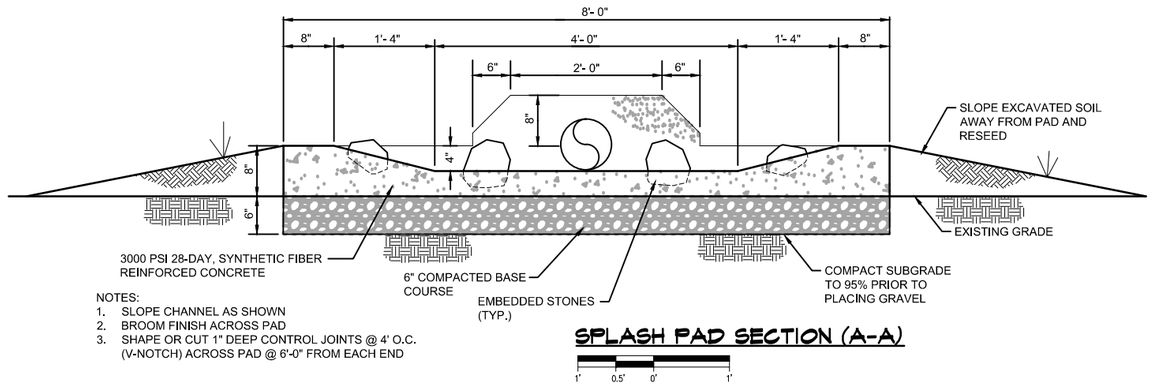

NOTES:
1. SLOPE CHANNEL AS SHOWN
2. BROOM FINISH ACROSS PAD
3. SHAPE OR CUT 1" DEEP CONTROL JOINTS @ 4' O.C. (V-NOTCH) ACROSS PAD @ 6'-0" FROM EACH END

SPLASH PAD SECTION (A-A)

1' 0.5' 0' 1'

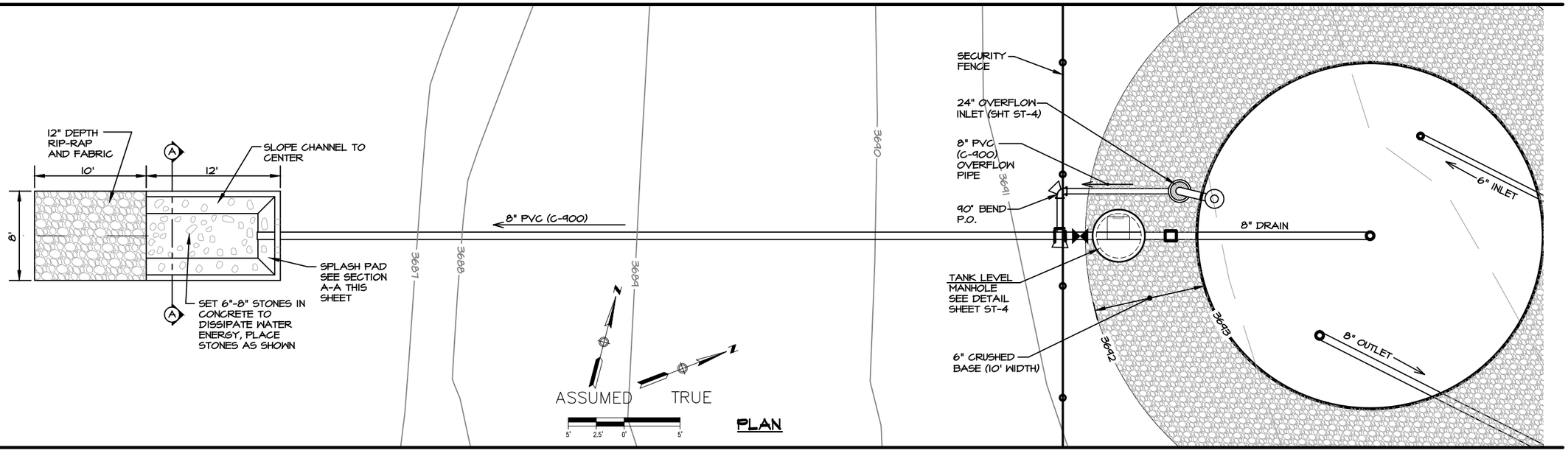

PLAN

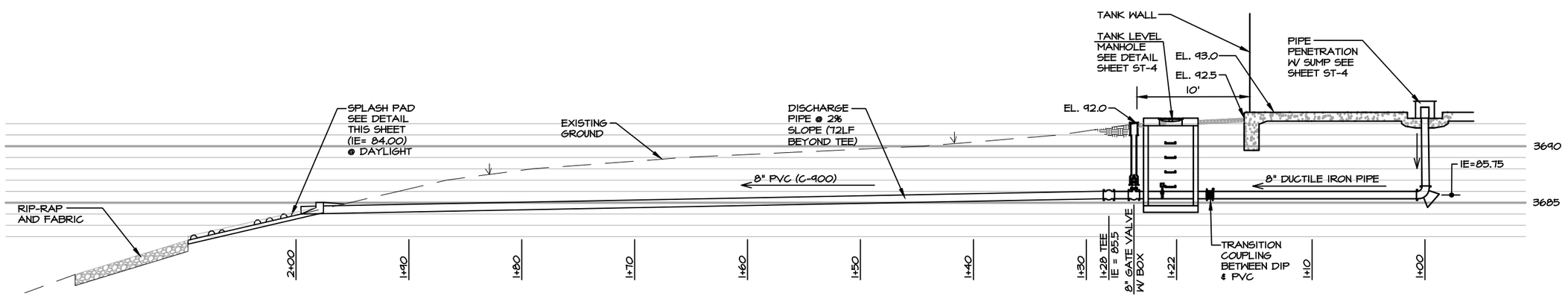

PROFILE

TANK OVER FLOW AND DRAIN PROFILE

Revisions	By	Date
AS-RECORDED	KF	7/2015

File No.	Job No.
43.109	1207 1207-ST-5
Date	Scale
3/21/14	AS SHOWN

Professional Seal

MONTANA
4682 E
REGISTERED PROFESSIONAL ENGINEER

Engineers
Environmental Specialists
Planners
Designers
Surveyors

NCI Engineering

4509 North Star Boulevard
P.O. Box 6350
Great Falls, MT 59406
Phone 406-453-5478
Fax 406-453-2009

Owner

SAND COULEE WATER DISTRICT

Project Title

SAND COULEE WATER IMPROVEMENTS 2014

Sheet Title

STORAGE TANK O.F. AND DRAIN PROFILE

Sheet	Of
ST-5	38

Copyright © 2015 NCI, All Rights Reserved

File # FILE #

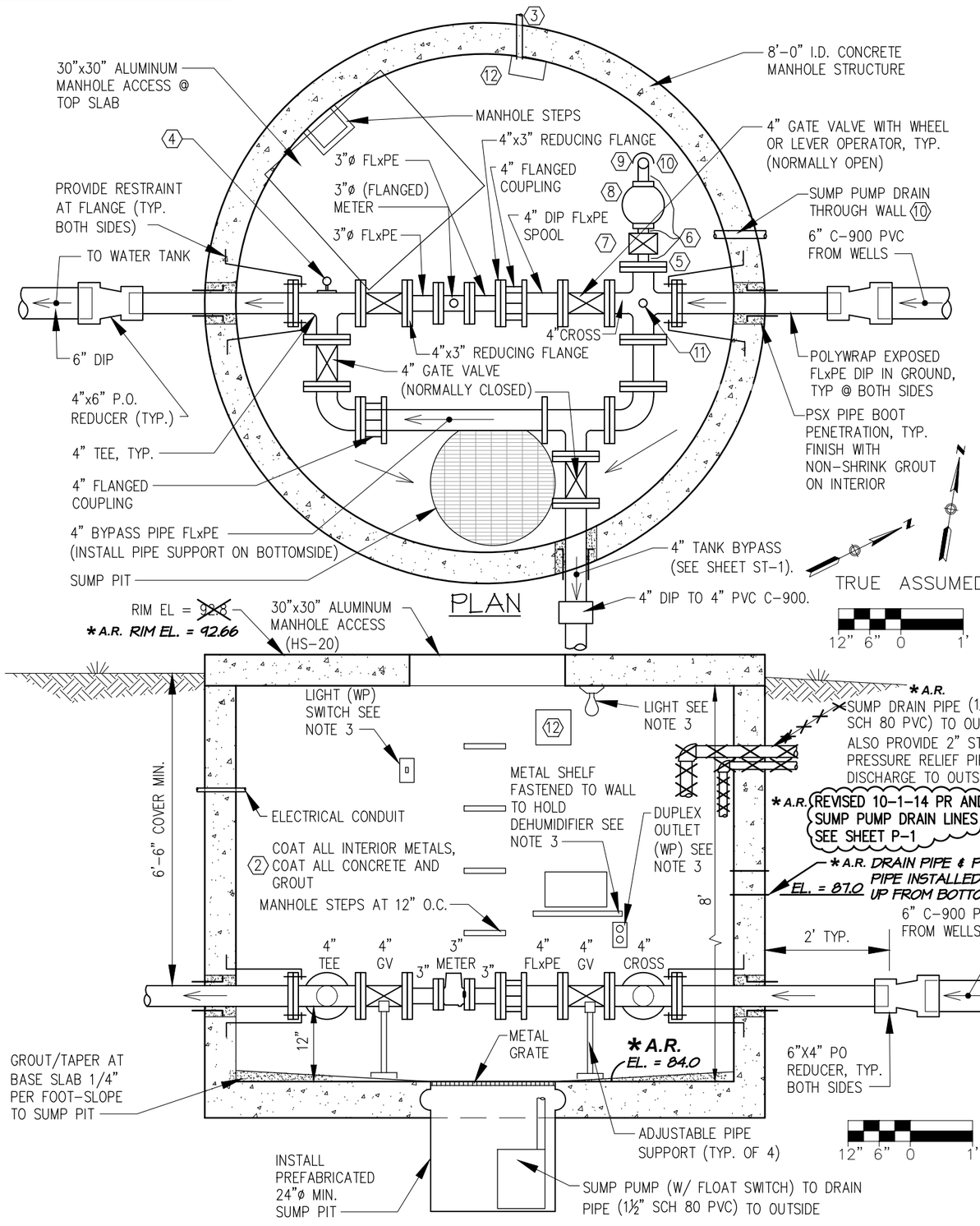

VERTICAL SECTION

FLOW METER AND MANHOLE

NOTES:

1. PIPING IN MANHOLE IS DIP FOR 4" AND 3"ø, GALVANIZED STEEL FOR 2"ø SCH. 40.
2. PROVIDE PROTECTIVE COATING (SIMILAR TO TNEMEC SERIES #1, NSF CERTIFIED) FOR ALL EXPOSED METALS WITHIN THE VAULT. APPLY TWO COATS AT 3 MIL EACH. FOR ALL CONCRETE AND GROUT SURFACES OF THE INTERIOR SURFACE APPLY 2 COATS (WHITE COLOR) @ 6MIL EACH W/ ACRYLIC EMULSION (TNEMEC-SERIES 180) PREP W/ SP7.
3. CONTRACTOR TO INSTALL 120V POWER (FROM 20AMP CIRCUIT BACK AT WELL HOUSE-LOCAL POWER PANEL) INTO THE WATER METER VAULT. THIS ELECTRICAL WILL FEED LIGHT BASE (100 WATT W/ WP SWITCH), A DEHUMIDIFIER (120V DUPLEX OUTLET), A SUMP PUMP IN SUMP, AND THE FLOW METER. ALSO FLOW METER 4-20MA SIGNAL (2-CONDUCTORS) RUNS BURIED BACK TO WELL HOUSE. ALONG WITH (2-CONDUCTORS) FOR METER PZR (POSITIVE ZERO RETURN) FOR METER BACK TO CONTROL PANEL IN WELL HOUSE. ALSO PROVIDE CONDUIT AND CONDUCTORS FOR 12 BACK TO CONTROL PANEL IN WELL HOUSE
4. SMOOTH NOSE SAMPLE TAP TAPPED ON BOSS @ 4" TEE
5. 4"x2" REDUCING FLANGE
6. 2" NIPPLE
7. 2" BRONZE BALL VALVE (NORMALLY OPEN)
8. 2" PRESSURE RELIEF VALVE (INSTALL PIPE SUPPORT ON BOTTOM SIDE)
9. 2" 90° BEND — REVISED 10-1-14
10. 2" STEEL UP AND THROUGH WALL WITH 90° BEND. RUN THE 2" PIPE TO DAYLIGHT STRAIGHT GRADE FOR DISCHARGE INTO RIP-RAP (ST-1).
11. TAP BOSS @ TOP OF CROSS FOR PRESSURE SENSOR ALSO INSTALL 4½"ø WET GLYCERIN-FILLED PRESSURE GAUGE W/ ¼" BRASS NPT, W/ STRAINER AND SHUT OFF VALVE DETAIL 2/16
12. SS J-BOX FOR TRANSDUCER SENSOR CONTROL SPLICING

DRAWING OF RECORD

Substantial Completion: June 18, 2015
Contractor: Boland Construction, Inc.

*THESE RECORD DRAWINGS HAVE BEEN NOTED * A.R. FOR MAJOR FIELD CHANGES FROM THE BID DESIGN AND FOR ACTUAL FIELD DIFFERENCES. THESE DRAWINGS HAVE BEEN PREPARED, IN PART, ON THE BASIS OF INFORMATION COMPILED BY OTHERS. THEY ARE NOT INTENDED TO REPRESENT IN DETAIL THE EXACT LOCATION, TYPE OF COMPONENT, NOR MANNER OF CONSTRUCTION. THE ENGINEER WILL NOT BE RESPONSIBLE FOR ANY ERRORS OR OMISSIONS WHICH HAVE BEEN INCORPORATED INTO THE RECORD DRAWINGS.*

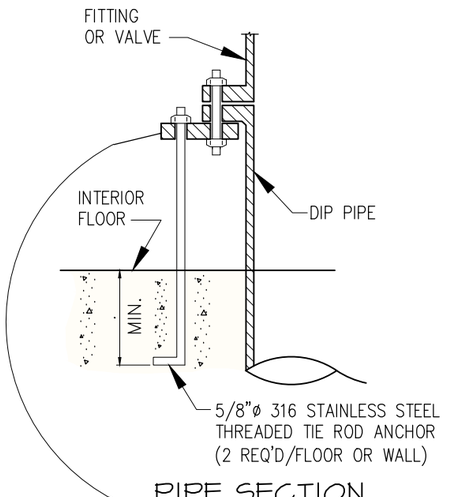

PIPE SECTION

EBBA IRON MEGALUG SERIES '1100' W/GRIPPER WEDGES FOR DIP. SERIES '6500' FOR PVC PIPE INSTALL GRIPPERS IN RIGHT DIRECTION

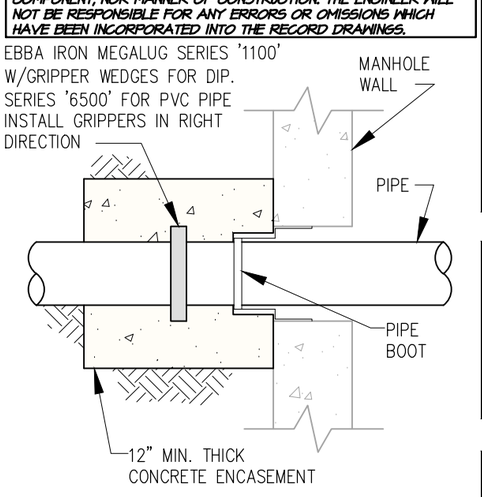

ALTERNATIVE THRUST CONSTRUCTION

(NEEDS ENGINEER'S APPROVAL)

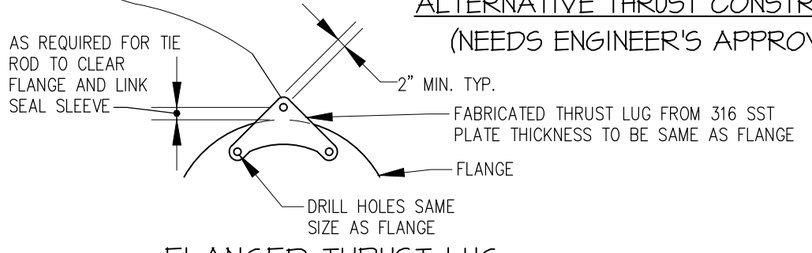

FLANGED THRUST LUG

ANCHOR THRUST

NO SCALE

Revisions	By	Date
AS-RECORDED	KF	7/2015

File No.	Job No.
43.109	1207 1207-ST-6
Date	Scale
10/1/14	AS SHOWN

Professional Seal

MONTANA 4682 E REGISTERED PROFESSIONAL ENGINEER

Engineers
Environmental Specialists
Planners
Designers
Surveyors

NCI Engineering

4509 North Star Boulevard
P.O. Box 6350
Great Falls, MT 59406
Phone 406-453-5478
Fax 406-453-2009

Owner

SAND COULEE WATER DISTRICT

Project Title

SAND COULEE WATER IMPROVEMENTS 2014

Sheet Title

STORAGE TANK FLOW METER AND MANHOLE

Sheet	Of
ST-6	38

Copyright © 2015 NCI, All Rights Reserved

File # FILE #

DRAWING OF RECORD
Substantial Completion: June 18, 2015
Contractor: Boland Construction, Inc.

THESE RECORD DRAWINGS HAVE BEEN NOTED * A.R. FOR MAJOR FIELD CHANGES FROM THE BID DESIGN AND FOR ACTUAL FIELD DIFFERENCES. THESE DRAWINGS HAVE BEEN PREPARED, IN PART, ON THE BASIS OF INFORMATION COMPILED BY OTHERS. THEY ARE NOT INTENDED TO REPRESENT IN DETAIL THE EXACT LOCATION, TYPE OF COMPONENT, NOR MANNER OF CONSTRUCTION. THE ENGINEER WILL NOT BE RESPONSIBLE FOR ANY ERRORS OR OMISSIONS WHICH HAVE BEEN INCORPORATED INTO THE RECORD DRAWINGS.

WORK SCOPE NOTES:

QUANTITIES FOR EXIST ROAD
4" DEPTH CBC X 12' WIDE X 2,560' LENGTH
3,413 SY

1. EXIST ROADWAY HAS EXIST GRAVEL SURFACE. INTENT NOW IS TO OVERLAY WITH ADDITIONAL 4" LAYER OF CRUSHED BASE COURSE MATERIAL SEE SECTION 2/T-3

TANK ACCESS EXIST ROAD IMPROVEMENTS

SHT T-2
START 6" DEPTH CBC
1+00
END 4" DEPTH CBC
26+60 PULVERIZED AC
* A.R.

6" DEPTH CBC - TOP TANK HILL SHEET T-2
PLUS ADDITIONAL PIT RUN FILL @ AREAS

* A.R.
PULVERIZED A.C. WAS USED FOR ROAD SURFACE, NOT "CBC"; PROPERTY OWNER AT TOP OF HILL REQUESTED PULVERIZED A.C.

TANK HILL ROAD
12' WIDE
DARKER LINES ARE 5' CONTOUR INTERVAL, TYP
3650
3600
3550
NEW TANK
EXISTING TANK
Pressure Reducing Structure
"Bogus" CURBSTOP FOR #33 (Closed)
ASSUMED TRUE
50' 25' 0' 50'
WS-3/4"
BEGIN 4" DEPTH CBC AT EXIST EDGE OF PAVMENT 1+00
OHE
6" ACP
4" ACP

Revisions	By	Date
AS-RECORDED	KF	7/2015

File No.	Job No.
43.109	1207 1207-T-01
Date	Scale
3/21/14	AS SHOWN

Professional Seal
MONTANA
John A. Nell
4682 E
REGISTERED PROFESSIONAL ENGINEER

Engineers
Environmental Specialists
Planners
Designers
Surveyors
NCI Engineering
4509 North Star Boulevard
P.O. Box 6350
Great Falls, MT 59406
Phone 406-453-5478
Fax 406-453-2009

Owner
SAND COULEE WATER DISTRICT

Project Title
SAND COULEE WATER IMPROVEMENTS 2014

Sheet Title
TANK ACCESS EXIST ROAD IMPROVMENTS

Sheet	Of
T-1	38

Copyright © 2015 NCI, All Rights Reserved
File # FILE #

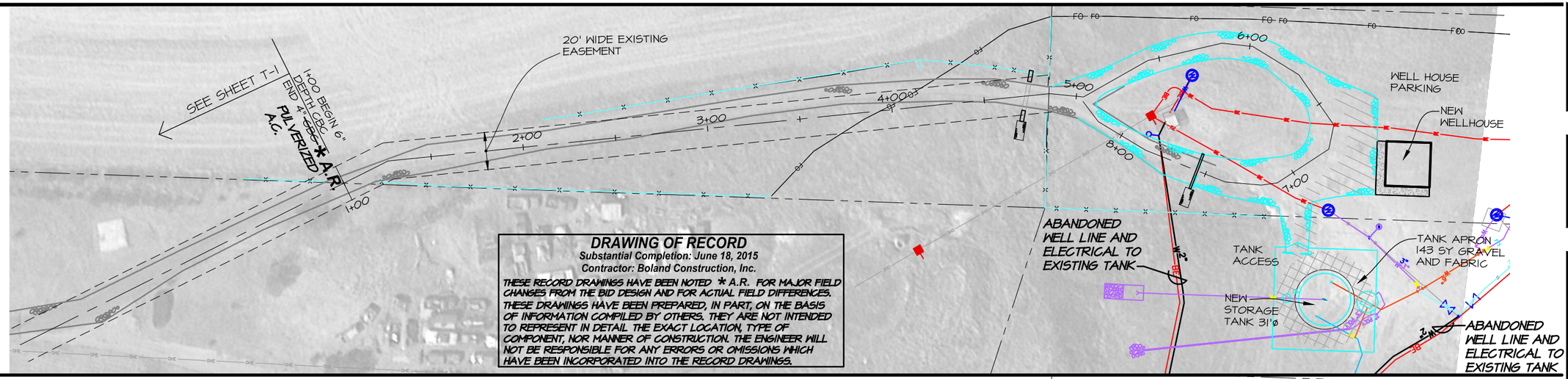

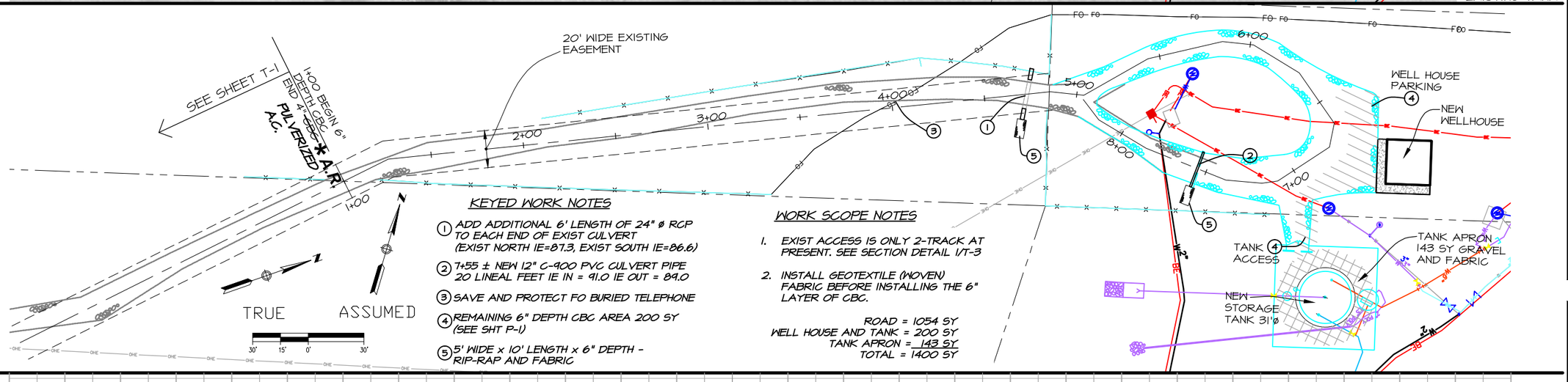

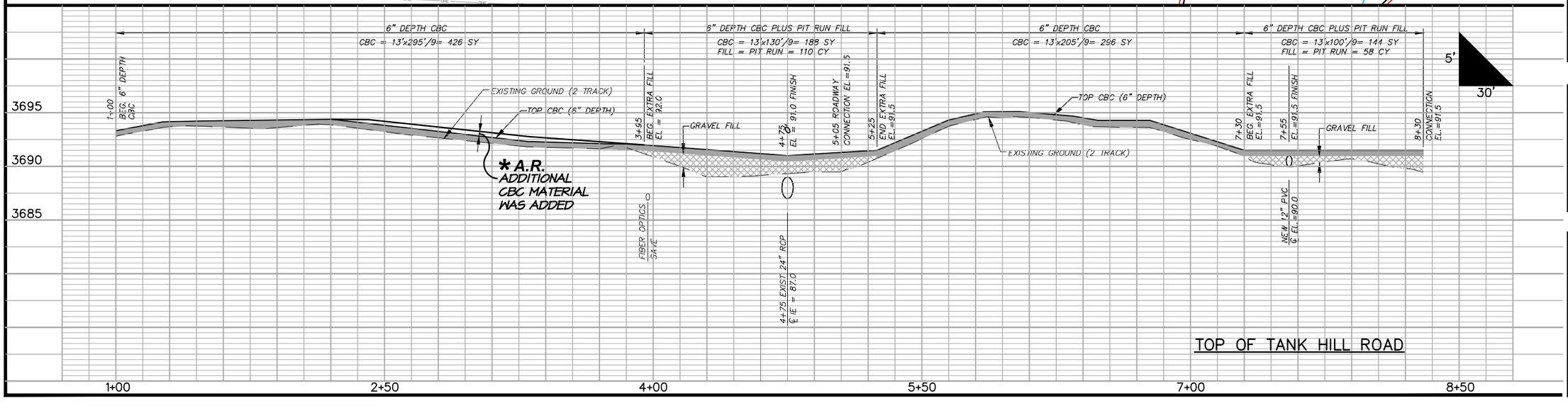

Revisions	By	Date
AS-RECORDED	KF	7/2015

File No.	Job No.
43.109	1207 1207-T-01
Date	Scale
3/21/14	AS SHOWN

Professional Seal

MONTANA
JOHN A. NEU
4682 E
REGISTERED PROFESSIONAL ENGINEER

Engineers
Environmental Specialists
Planners
Designers
Surveyors

NCI Engineering

4509 North Star Boulevard
P.O. Box 6350
Great Falls, MT 59406
Phone 406-453-5478
Fax 406-453-2009

Owner

SAND COULEE WATER DISTRICT

Project Title

SAND COULEE WATER IMPROVEMENTS 2014

Sheet Title

TANK ACCESS TOP OF TANK HILL

Sheet	Of
T-2	38

Copyright © 2015 NCI, All Rights Reserved

File #

DRAWING OF RECORD
Substantial Completion: June 18, 2015
Contractor: Boland Construction, Inc.

THESE RECORD DRAWINGS HAVE BEEN NOTED * A.R. FOR MAJOR FIELD CHANGES FROM THE BID DESIGN AND FOR ACTUAL FIELD DIFFERENCES. THESE DRAWINGS HAVE BEEN PREPARED, IN PART, ON THE BASIS OF INFORMATION COMPILED BY OTHERS. THEY ARE NOT INTENDED TO REPRESENT IN DETAIL THE EXACT LOCATION, TYPE OF COMPONENT, NOR MANNER OF CONSTRUCTION. THE ENGINEER WILL NOT BE RESPONSIBLE FOR ANY ERRORS OR OMISSIONS WHICH HAVE BEEN INCORPORATED INTO THE RECORD DRAWINGS.

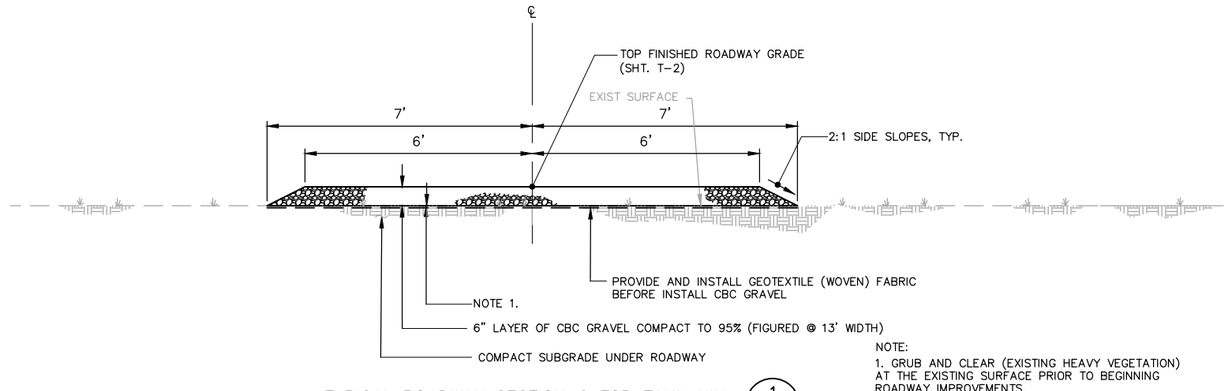

TYPICAL ROADWAY SECTION @ TOP TANK HILL — 1 / T-3

2' 1' 0' 2'

NOTE:
1. GRUB AND CLEAR (EXISTING HEAVY VEGETATION) AT THE EXISTING SURFACE PRIOR TO BEGINNING ROADWAY IMPROVEMENTS.

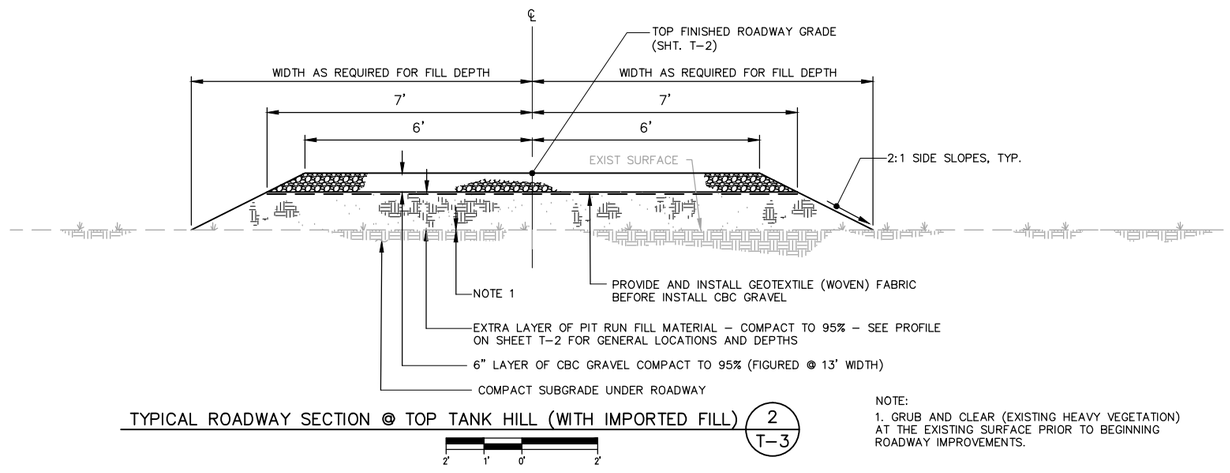

TYPICAL ROADWAY SECTION @ TOP TANK HILL (WITH IMPORTED FILL) — 2 / T-3

2' 1' 0' 2'

NOTE:
1. GRUB AND CLEAR (EXISTING HEAVY VEGETATION) AT THE EXISTING SURFACE PRIOR TO BEGINNING ROADWAY IMPROVEMENTS.

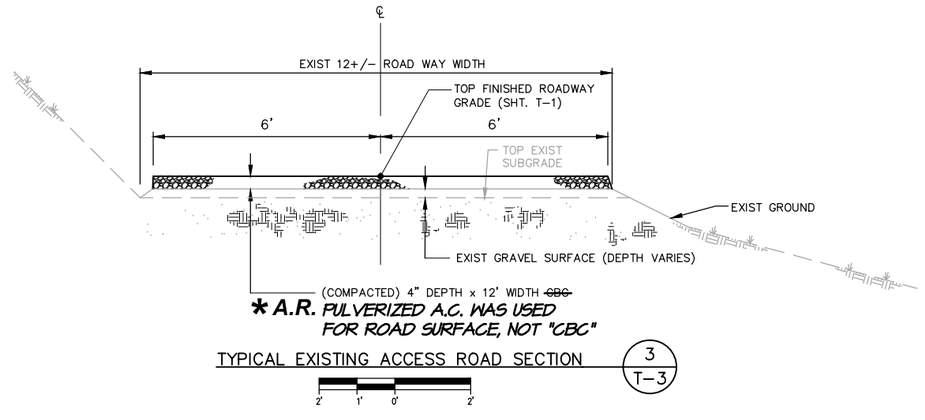

***A.R.** PULVERIZED A.C. WAS USED FOR ROAD SURFACE, NOT "CBC"*

TYPICAL EXISTING ACCESS ROAD SECTION — 3 / T-3

2' 1' 0' 2'

TANK ROAD SECTIONS

Revisions	By	Date
AS-RECORDED	KF	7/2015

File No.	Job No.
43.109	1207 1207-T-01
Date	Scale
3/21/14	AS SHOWN

Professional Seal

MONTANA — John C. Neil — 4682 E — REGISTERED PROFESSIONAL ENGINEER

Engineers
Environmental Specialists
Planners
Designers
Surveyors

NCI Engineering

4509 North Star Boulevard
P.O. Box 6350
Great Falls, MT 59406
Phone 406-453-5478
Fax 406-453-2009

Owner

SAND COULEE WATER DISTRICT

Project Title

SAND COULEE WATER IMPROVEMENTS 2014

Sheet Title

TANK ACCESS SECTIONS

Sheet	Of
T-3	38

Copyright © 2015 NCI, All Rights Reserved

File # FILE #

APPENDIX B-8

APPENDIX B-9

NCI Engineering Co.
Engineers • Environmental • Planners • Designers
www.nciengineering.com

June 2, 2017

Rachel Clark. P.E.
Montana Department of Environmental Quality
Public Water and Subdivisions Bureau
P.O. Box 200901
Helena, MT 59620-0201

RE: Sand Coulee Water Well #6 Pump construction, EQ#17-1360, MT0000325
Spring 2017

Dear Rachel,

The referenced well no. 6 for the Sand Coulee Water District has been inspected during the month of May 2017 and found to be constructed in substantial compliance with the D.E.Q. approved plans and specifications. The system has not been placed into service waiting approval of this certification letter. There are no deviations from the design standards other than those previously approved by the Department. All equipment was provided and installed by Pat Byrne Drilling in accordance with the plans and specifications approved by the Department (dated October 31, 2016) with the following exceptions:

1. A 2" diameter flushing hydrant was added to make flushing the well more efficient.
2. The well was disinfected and bacteriological samples were collected as described in the Hydrometrics letter; dated June 12, 2017, to you which included results for the bacteriological samples.

Upon approval of this certification the Contractor (Pat Byrne Drilling) will perform a "start up" to allow verification of the proper controls and VFD equipment function with the tank online. As-builts plans will be completed and submitted after completion of this start-up.

Attached is a photo exhibit documenting aspects of the general construction.

Thank you for your professionalism over the years and the review and approval of this certification.

Sincerely,

Jake Neil, P.E.

cc: Tom Henderson, AML/DEQ
Pat Byrne Drilling
Sand Coulee Water and Sewer District
Mark Rhodes, Hydrometrics

4509 North Star Blvd.
Great Falls, MT 59405
Phone 406.453.5478

3” PVC to Well #6

Power Disconnect

1” Frostless Sample Tap

Well Cap
(Concrete not Poured Yet)

2” Flushing Hydrant

Pump

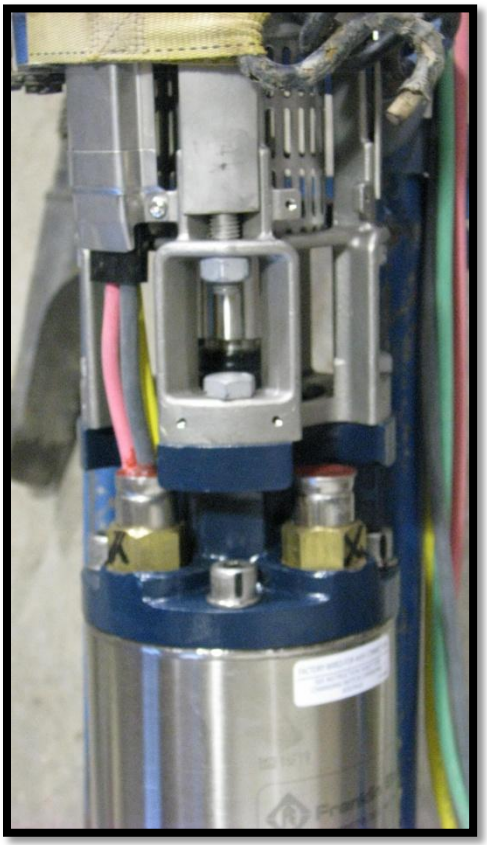

Well Pump and Motor

Check Valve

Well #5

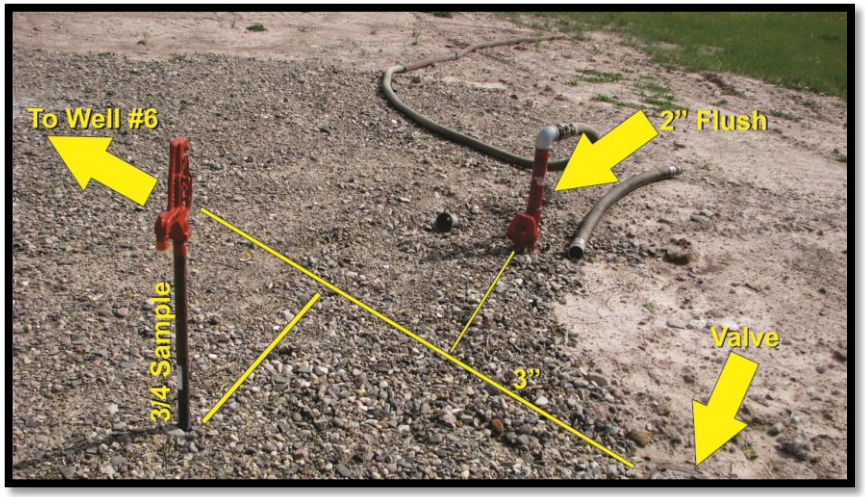
To Well #6
2" Flush
3/4 Sample
3"
Valve

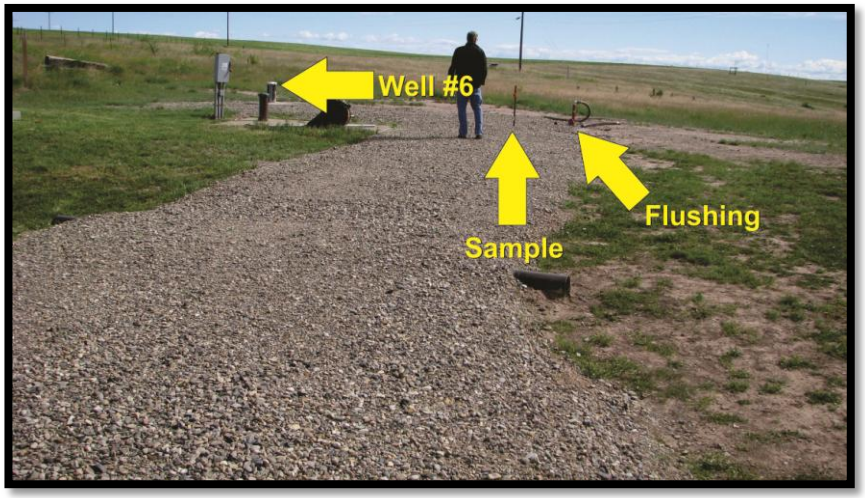
Well #6
Sample
Flushing

Well #6 Disconnect
Old Well #4
New Well #6

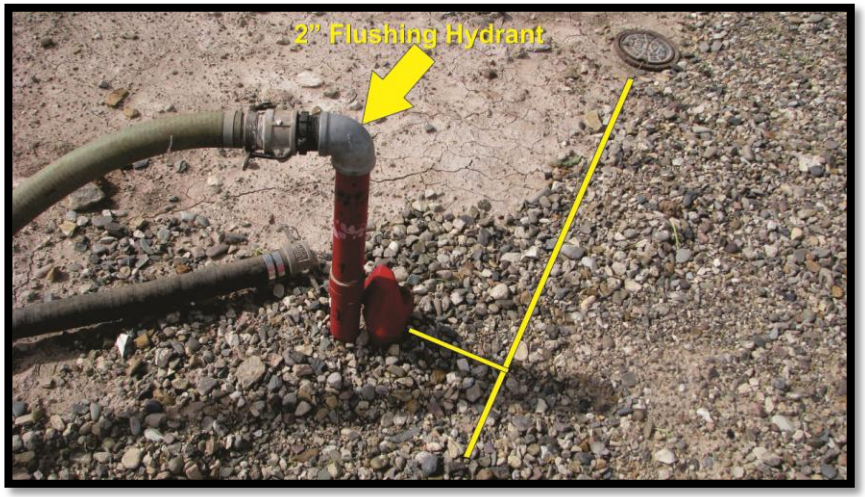
2" Flushing Hydrant

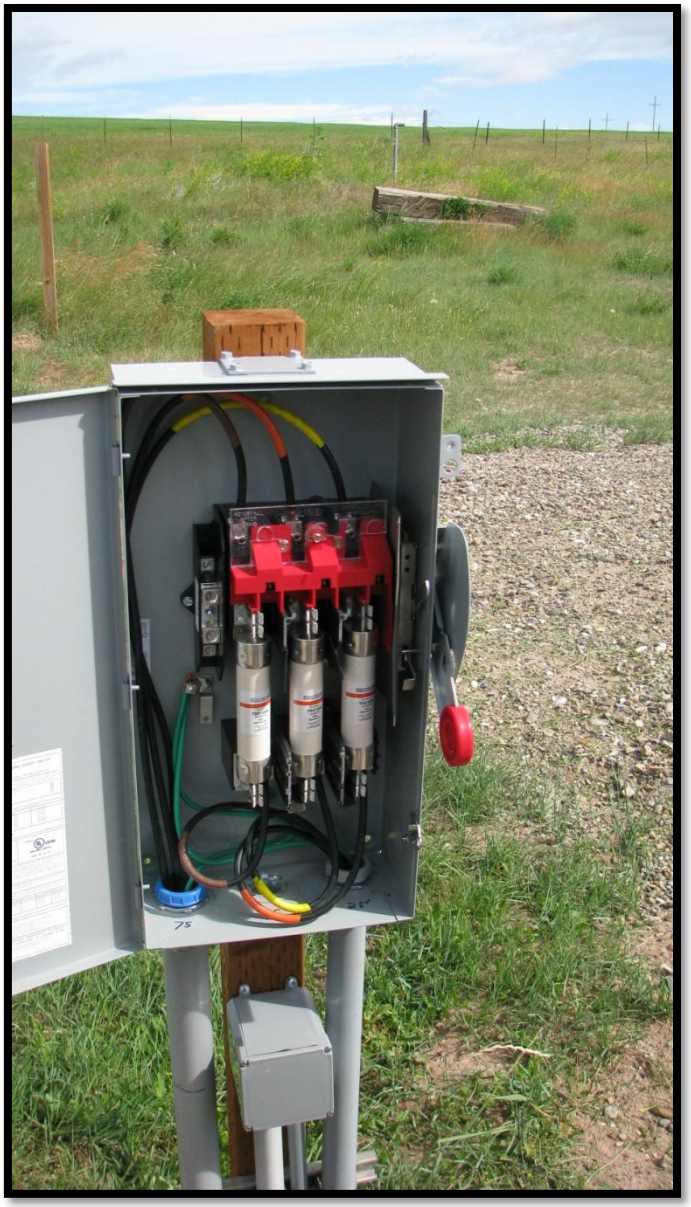

ICS HEALY-RUFF
Kent
Luoma
Rob
Balderston
Training
WARNING

VFD Well #5
VFD Well #6

VFD
CUE
Setpoint
100
100 %
0.00
1.1 OPERATION
On/
Off
On
Off
Alarm
OK
GRUNDFOS

Tyler Byrne
Pat Byrne (Driller)
Jake Neil

Water diversion at bottom of hill

Kent Luoma
Tom Henderson

DRAWING OF RECORD
SPRING 2017
PAT BYRNE DRILLING

THESE RECORD DRAWINGS HAVE BEEN NOTED ✱A.R. FOR MAJOR FIELD CHANGES FROM THE BID DESIGN AND FOR ACTUAL FIELD DIFFERENCES.

THESE DRAWINGS HAVE BEEN PREPARED, IN PART, ON THE BASIS OF INFORMATION COMPILED BY OTHERS. THEY ARE NOT INTENDED TO REPRESENT IN DETAIL THE EXACT LOCATION, TYPE OF COMPONENT, NOR MANNER OF CONSTRUCTION. THE ENGINEER WILL NOT BE RESPONSIBLE FOR ANY ERRORS OR OMISSIONS WHICH HAVE BEEN INCORPORATED INTO THE RECORD DRAWINGS.

CONNECTION FOR WELL #6
(PHOTO OF PAST CONSTRUCTION)

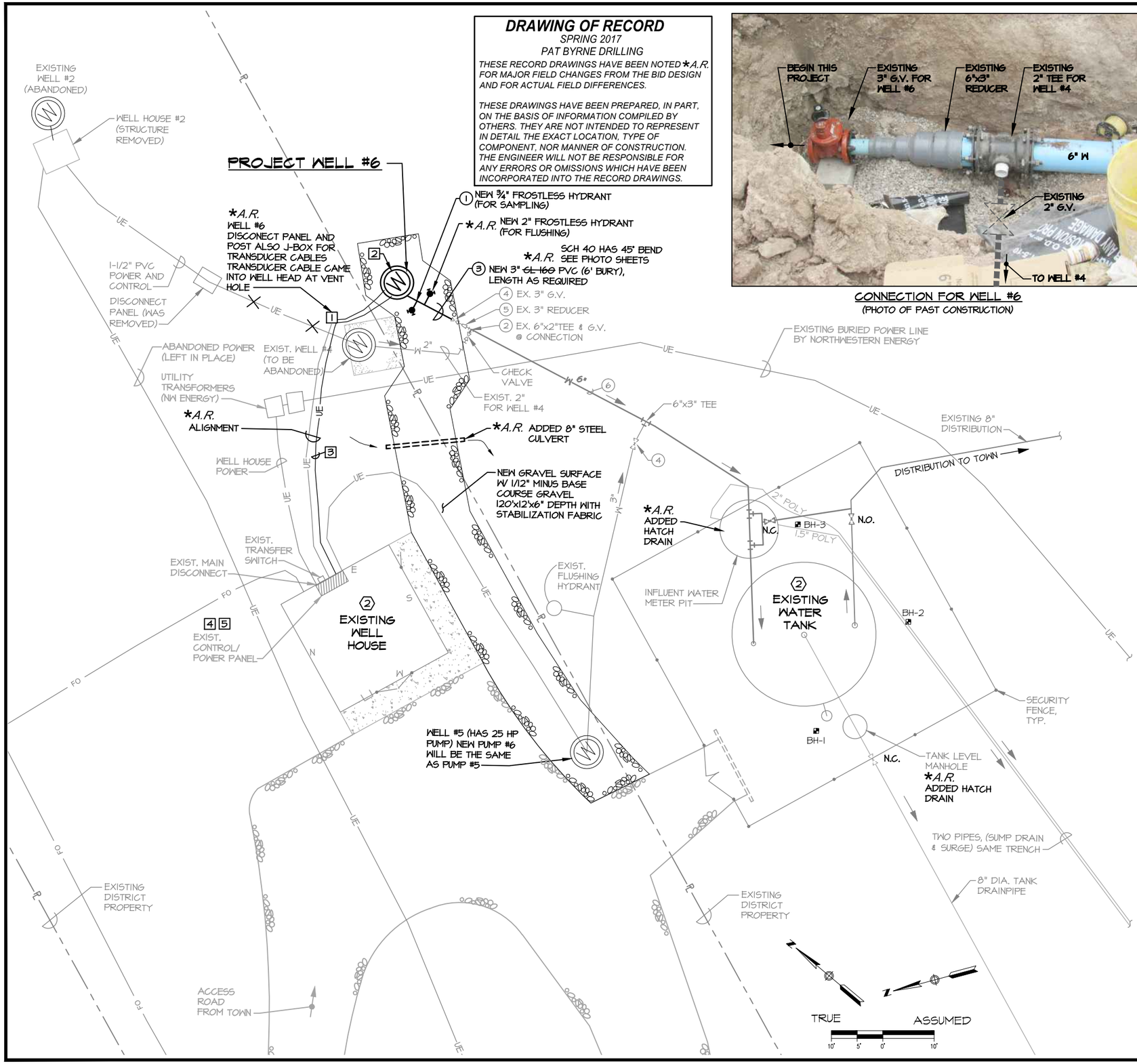

WATER TANK HILL - SITE PLAN

TOPOGRAPHIC LEGEND

	EXISTING
VALVE	
CHECK VALVE	
NORMALLY OPEN	NO
NORMALLY CLOSED	NC
WATER	W
OVERHEAD ELECTRIC	OHE
POWER POLE	
FIBER OPTIC CABLE	FO
CONTROL POINT	CP
TEST HOLE & NUMBER	
PROPERTY LINE	
CONTOURS	3680
POINT ELEVATION	98.5

GENERAL NOTES (NEW WORK):

1. PROJECT WELL #6 HAS BEEN DRILLED AND CASING PIPE INSTALLED. ORIGINAL PROJECT INSTALLED ELECTRICAL POWER AND CONTROL TO THIS LOCATION AND WERE TEMPORARY DEAD ENDED. THE 3" PVC WELL DISCHARGE WAS STUBBED TO THIS WELL #6 LOCATION ALSO.
2. COORDINATE EXISTING WELL PUMP(S) OPERATION (AND EXISTING TANK) WITH INSTALLATION OF NEW EQUIPMENT AND KEEPING TOWN IN WATER.

MECHANICAL WORK @ PROJECT WELL #6

1. INSTALL FROSTLESS HYDRANT (SMOOTH NOSE) FOR WELL SAMPLING, SEE SPEC DWG #12; HYDRANT IS SUPPLIED BY OWNER; CONTRACTOR WILL SUPPLY SADDLE AND 3/4" HDPE PIPING
2. EXIST. 2" GV AND VALVE BOX ✱A.R. SCH. 40
3. NEW 3" ~~SL-160~~ PVC (6' BURY) FOR WELL #6
4. EXIST. 3" GV AND VALVE BOX FOR WELLS #5 & #6
5. EXIST. 3"x6" REDUCER
6. EXIST. 6" C-900 PVC DR-14

ELECTRICAL WORK @ PROJECT WELL #6

1. EXIST. BURIED ELECTRICAL FEED WITH LOCAL DISCONNECT SWITCH AND PANEL (DETAIL 2/P-6) TO WELL PUMP #6 FROM WELL HOUSE
2. LEVEL TRANSDUCER & TRANSDUCER CABLE FOR WELL #6 WELLS IS PROVIDED (READY TO INSTALL INSIDE CASING PIPE), SEE SHEET "W6-PUMP INSTALL"; TRANSDUCER TO MONITOR GROUND WATER ELEVATION; EXISTING TRANSDUCER CONTROL WIRES ARE FED FROM WELL HOUSE
3. EXISTING BURIED ELECTRICAL FEEDS AND CONTROL (TRANSDUCER SIGNAL) FOR WELL #6
4. CONTRACTOR WILL CONFIRM WELL #6 IS BEING OPERATED AND RECEIVING POWER FROM EXISTING CONTROL/POWER PANEL AND WELL TRANSDUCER IS PROVIDING CORRECT LEVELS
5. CONFIRM THE EXISTING CONTROL PANEL ALLOWS ALTERNATE RUN CYCLES BETWEEN WELL PUMPS #5 & #6; PUMPS WILL RUN AUTO OR MANUAL; ALARMS WILL BE SIGNALED

✱A.R.
SEE ALSO CONSTRUCTION PHOTO'S PROVIDED ALSO SEE O&M MANUAL SUPPLIED TO DISTRICT FROM BYRNE. PAT BYRNE ALSO HAS COPY.

Revisions	By	Date

File No.	Job No.
43.109	1207 1207-W6-1
Date	Scale
9/20/16	AS SHOWN

Professional Seal
MONTANA
John A. Nell
4682 E
REGISTERED PROFESSIONAL ENGINEER

Engineers
Environmental Specialists
Planners
Designers
Surveyors
NCI Engineering
4509 North Star Boulevard
P.O. Box 6350
Great Falls, MT 59406
Phone 406-453-5478
Fax 406-453-2009

Owner
SAND COULEE WATER DISTRICT

Project Title
SAND COULEE WATER IMPROVEMENTS
2014

Sheet Title
WELL #6 PUMPING
WATER TANK HILL SITE PLAN

Sheet	Of
W6-1	3

Copyright © 2016 NCI, All Rights Reserved
File # FILE #

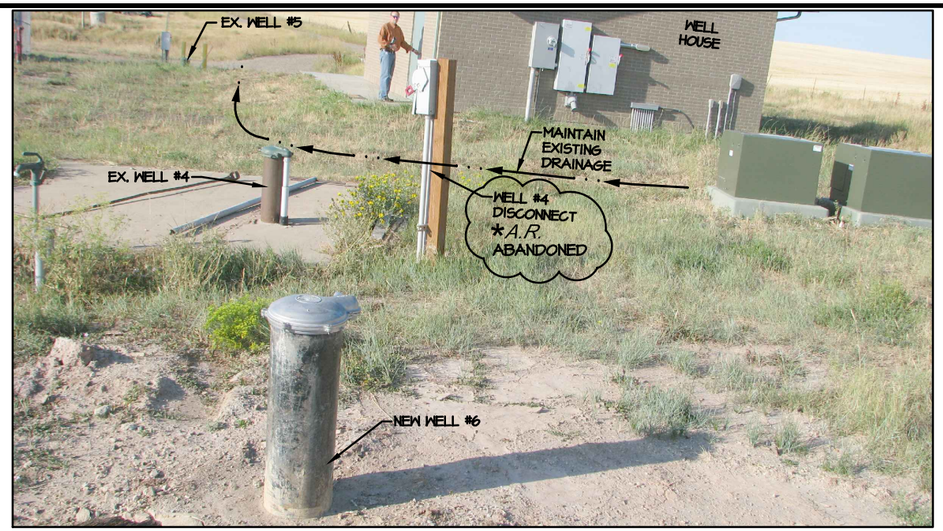

WELL SITE

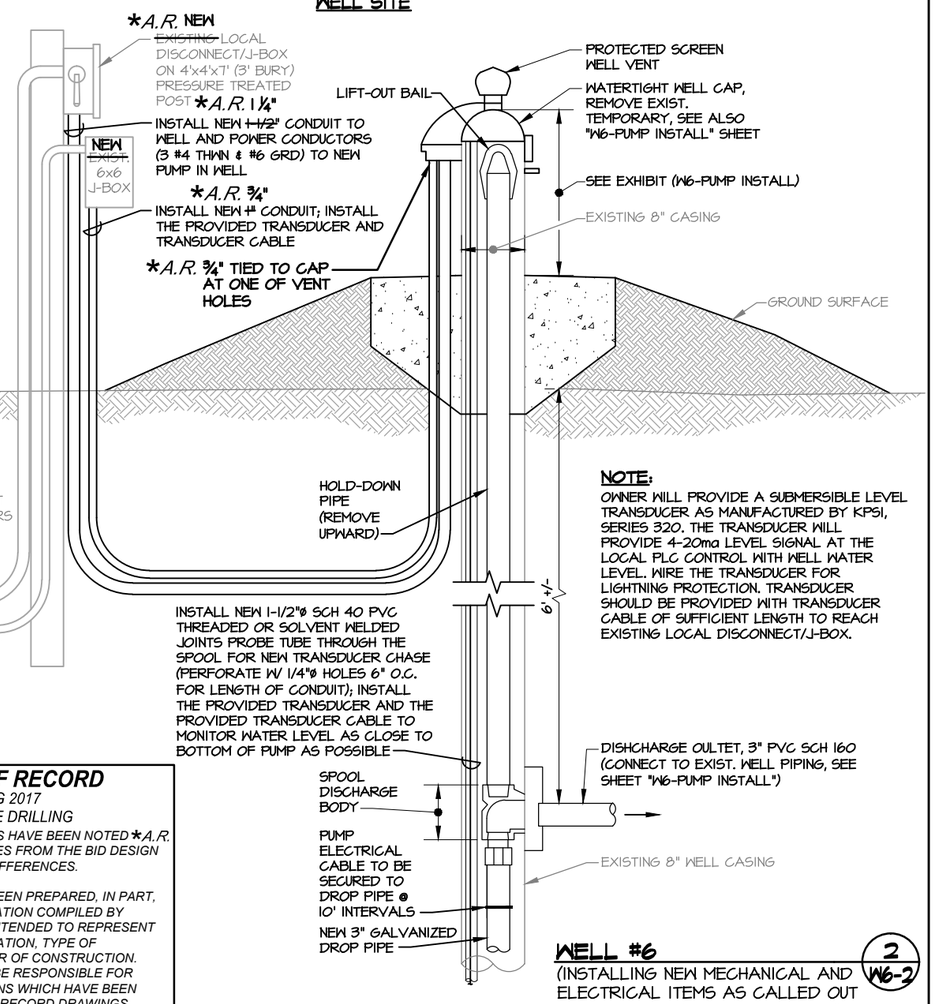

NOTE:
OWNER WILL PROVIDE A SUBMERSIBLE LEVEL TRANSDUCER AS MANUFACTURED BY KPSI, SERIES 320. THE TRANSDUCER WILL PROVIDE 4-20ma LEVEL SIGNAL AT THE LOCAL PLC CONTROL WITH WELL WATER LEVEL. WIRE THE TRANSDUCER FOR LIGHTNING PROTECTION. TRANSDUCER SHOULD BE PROVIDED WITH TRANSDUCER CABLE OF SUFFICIENT LENGTH TO REACH EXISTING LOCAL DISCONNECT/J-BOX.

DRAWING OF RECORD
SPRING 2017
PAT BYRNE DRILLING

*THESE RECORD DRAWINGS HAVE BEEN NOTED *A.R. FOR MAJOR FIELD CHANGES FROM THE BID DESIGN AND FOR ACTUAL FIELD DIFFERENCES.*

THESE DRAWINGS HAVE BEEN PREPARED, IN PART, ON THE BASIS OF INFORMATION COMPILED BY OTHERS. THEY ARE NOT INTENDED TO REPRESENT IN DETAIL THE EXACT LOCATION, TYPE OF COMPONENT, NOR MANNER OF CONSTRUCTION. THE ENGINEER WILL NOT BE RESPONSIBLE FOR ANY ERRORS OR OMISSIONS WHICH HAVE BEEN INCORPORATED INTO THE RECORD DRAWINGS.

WELL #6 (2 / W6-2)
(INSTALLING NEW MECHANICAL AND ELECTRICAL ITEMS AS CALLED OUT HERE AND ON "W6-PUMP INSTALL" SHEET)

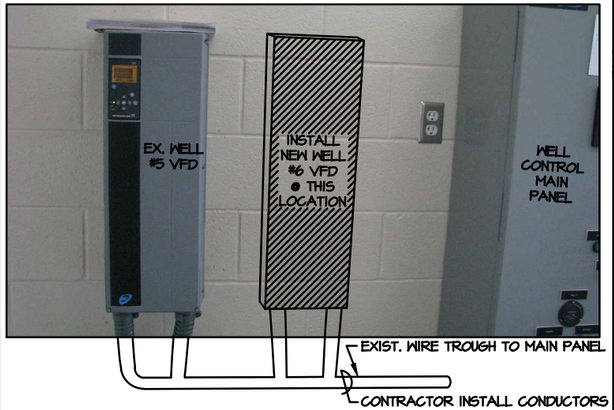

INTERIOR OF EXISTING PUMP HOUSE

NOTE:
EXISTING VFD (#5) IS ON LEFT SIDE OF CONTROL PANEL; INSTALL THE NEW VFD (#6) ON LEFT SIDE ALSO

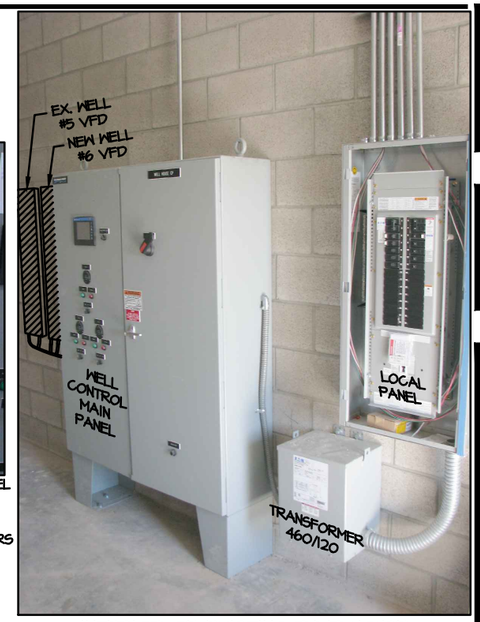

INTERIOR OF EXISTING PUMP HOUSE

***A.R.**
NOTE:
EXIST WELL #4 CONTROL/POWER BECOMES DEFUNCT.

EXTERIOR | INTERIOR

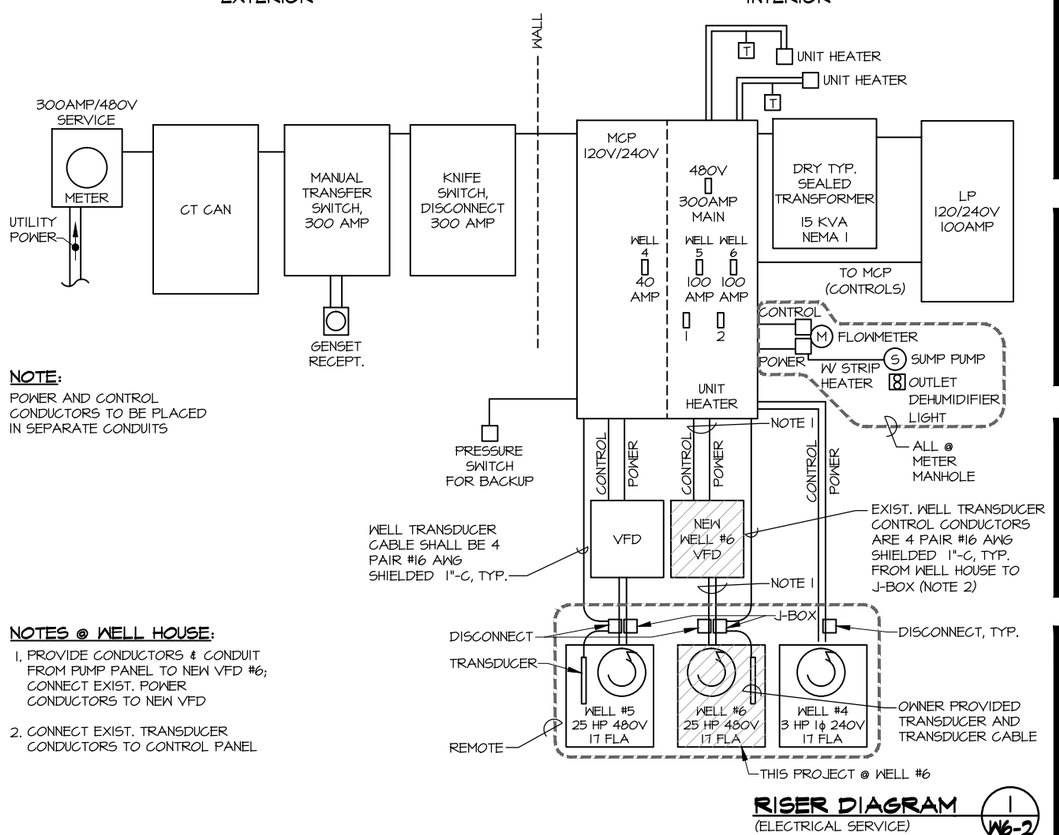

NOTE:
POWER AND CONTROL CONDUCTORS TO BE PLACED IN SEPARATE CONDUITS

NOTES @ WELL HOUSE:
1. PROVIDE CONDUCTORS & CONDUIT FROM PUMP PANEL TO NEW VFD #6; CONNECT EXIST. POWER CONDUCTORS TO NEW VFD
2. CONNECT EXIST. TRANSDUCER CONDUCTORS TO CONTROL PANEL

RISER DIAGRAM (1 / W6-2)
(ELECTRICAL SERVICE)

Revisions	By	Date

File No.	Job No.
43.109	1207 1207-W6-2
Date	Scale
9/20/16	AS SHOWN

Professional Seal
MONTANA
4682 E
REGISTERED PROFESSIONAL ENGINEER

Engineers
Environmental Specialists
Planners
Designers
Surveyors
NCI Engineering
4509 North Star Boulevard
P.O. Box 6350
Great Falls, MT 59406
Phone 406-453-5478
Fax 406-453-2009

Owner
SAND COULEE WATER DISTRICT

Project Title
SAND COULEE WATER IMPROVEMENTS 2014

Sheet Title
WELL #6 PUMPING MISCELLANEOUS DETAILS

Sheet	Of
W6-2	3

Copyright © 2016 NCI, All Rights Reserved
File # FILE #

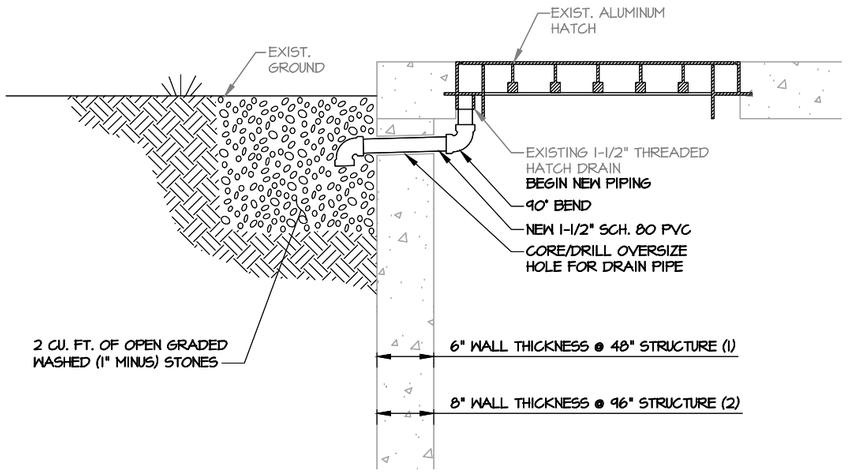

SECTION

TYP. INSTALLATION @ BELOW GROUND DISCHARGE

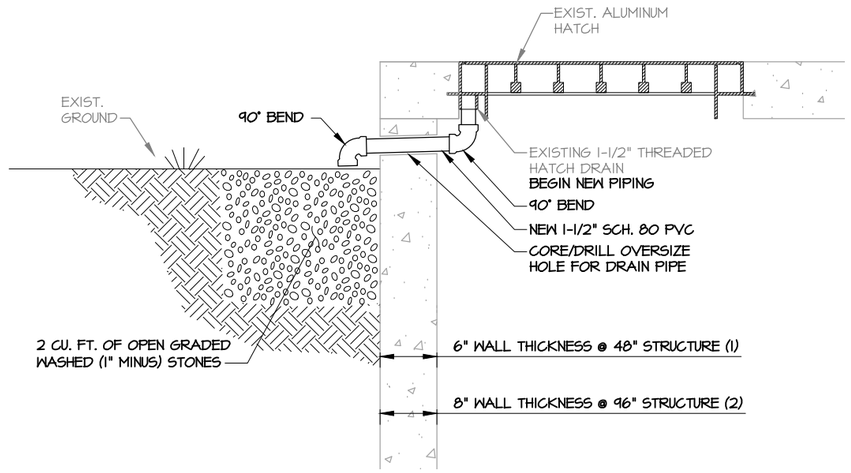

SECTION

TYP. INSTALLATION @ ABOVE GROUND DISCHARGE

HATCH DRAINS @ MANHOLE STRUCTURES

3 STRUCTURE LOCATIONS:
2 @ TANK ENCLOSURE
1 @ TOE OF TANK HILL

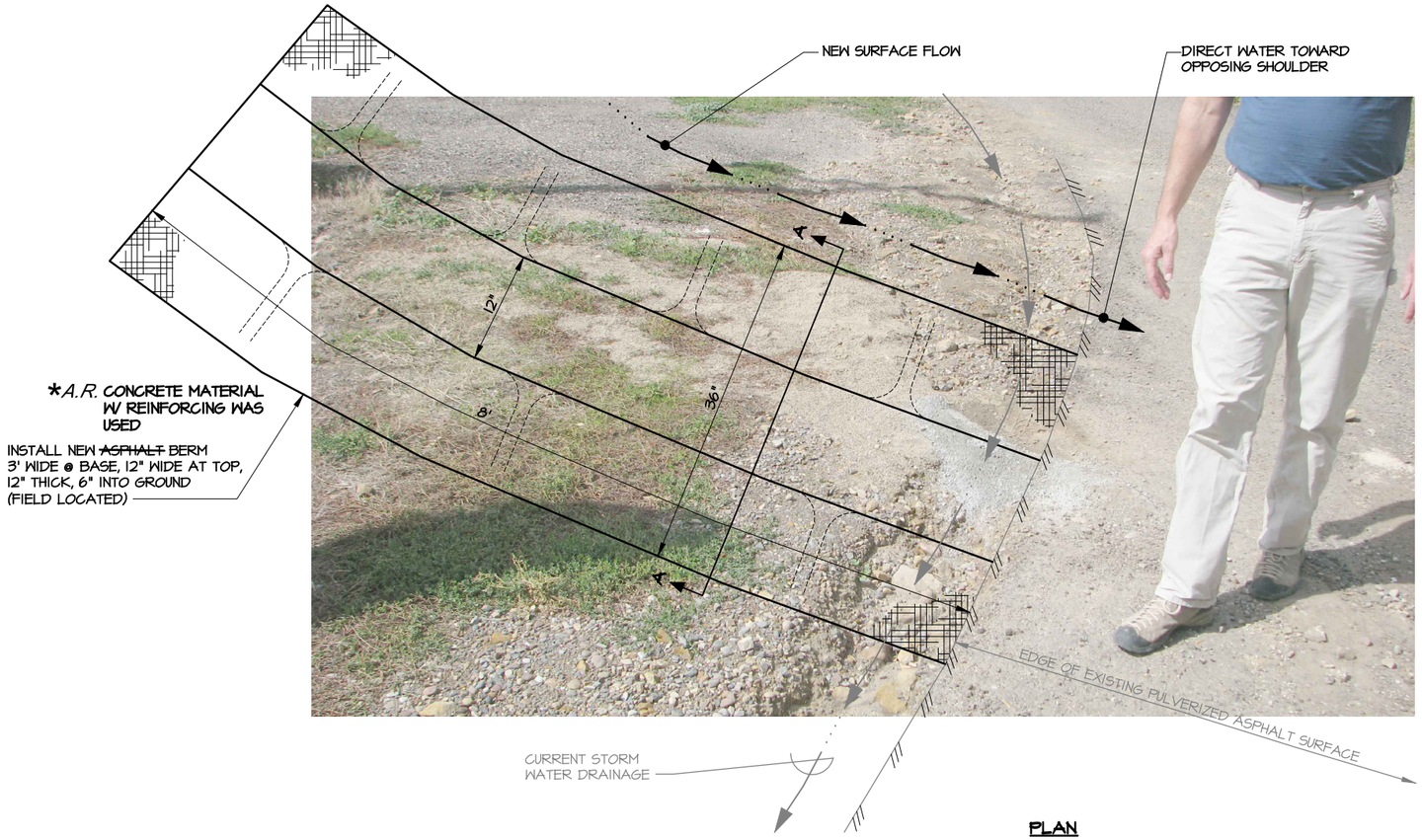

PLAN

DRAINAGE BERM

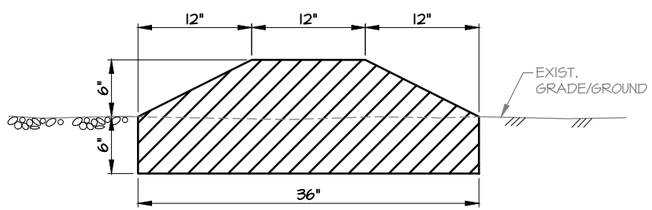

SECTION A-A

CROSS-SECTION OF NEW ASPHALT BERM

*A.R. CONCRETE MATERIAL W REINFORCING WAS USED

THIS LOCATION IS @ TOE OF TANK HILL

DRAWING OF RECORD
SPRING 2017
PAT BYRNE DRILLING

*THESE RECORD DRAWINGS HAVE BEEN NOTED *A.R. FOR MAJOR FIELD CHANGES FROM THE BID DESIGN AND FOR ACTUAL FIELD DIFFERENCES.*

THESE DRAWINGS HAVE BEEN PREPARED, IN PART, ON THE BASIS OF INFORMATION COMPILED BY OTHERS. THEY ARE NOT INTENDED TO REPRESENT IN DETAIL THE EXACT LOCATION, TYPE OF COMPONENT, NOR MANNER OF CONSTRUCTION. THE ENGINEER WILL NOT BE RESPONSIBLE FOR ANY ERRORS OR OMISSIONS WHICH HAVE BEEN INCORPORATED INTO THE RECORD DRAWINGS.

Revisions	By	Date

File No.	Job No.
43.109	1207 1207-W6-3
Date	Scale
9/20/16	AS SHOWN

Professional Seal

MONTANA
John C. Weil
4682 E
REGISTERED PROFESSIONAL ENGINEER

Engineers
Environmental Specialists
Planners
Designers
Surveyors

NCI Engineering

4509 North Star Boulevard
P.O. Box 6350
Great Falls, MT 59406
Phone 406-453-5478
Fax 406-453-2009

Owner

SAND COULEE WATER DISTRICT

Project Title

SAND COULEE WATER IMPROVEMENTS 2014

Sheet Title

DRAINAGE BERM & HATCH DRAIN

Sheet	Of
W6-3	3

Copyright © 2016 NCI, All Rights Reserved

File # FILE #

APPENDIX B-10

Hydrometrics, Inc.
consulting scientists and engineers

3060 Bozeman Ave.
Helena, MT 59601
(406) 443-4150
www.hydrometrics.com

June 12, 2017

Ms. Rachel Clark
Montana Department of Environmental Quality
P.O. Box 200901
Helena, MT 59620-0901

Subject: Sand Coulee Water Well #6 Disinfection, EQ#17-1360, MT0000325
Spring 2017

Dear Rachel,

On May 31, 2017 the Sand Coulee Water District along with oversight from Hydrometrics Inc. chlorinated well #6 at 10:15 a.m using GLB Supercharge 65% available chlorine powder. The water in the well was recirculated throughout the well casing, well pump, and pump piping using a hose connected to the 2" flushing hydrant until chlorinated water was detected in the water from the hose. The entire chlorination process was complete by 10:40 a.m.

The Sand Coulee Water District and Hydrometrics Inc. personnel returned on June 1, 2017 to sample the chlorine content in the well to verify a minimum 25 ppm residual chlorine was still present after 24 hours. The Well #6 pump was turned on and the sampling hydrant was opened up and allowed to run for 30 seconds. A sample was then taken from the sampling hydrant at 10:17 a.m. and was tested for chlorine content using Active Chlorine test strips. The test strip indicated a chlorine content between 50 and 100 ppm chlorine. The 2" flushing hydrant was then opened up and the well was flushed for 20 minutes. Two additional samples were collected and tested at 10:19 a.m. and a final test at 10:37a.m. The test strip at 10:19 a.m. indicated a chlorine content between 25 and 50 ppm and the final test after 20 min of flushing indicated less than 25 ppm. Attached are photos of the chlorine powder used and the chlorine test strip results. The results of the well disinfection met the DEQ requirement of at least 25 ppm residual chlorine after 24 hours.

On June 6, 2017 Sand Coulee Water District representative Kent Luoma collected two water samples and sent them to Aqua Tech Laboratory in Lewistown, MT for bacteriological analysis. Both samples were negative for total coliforms and E.Coli. Results of this sampling are attached to this letter.

If you have any questions, please call me at 406-431-1637.

Sincerely,

Mark Rhodes
Civil Engineer

Attachments

Photo 1: GLB Super Charge Chlorine Powder used to disinfect well.

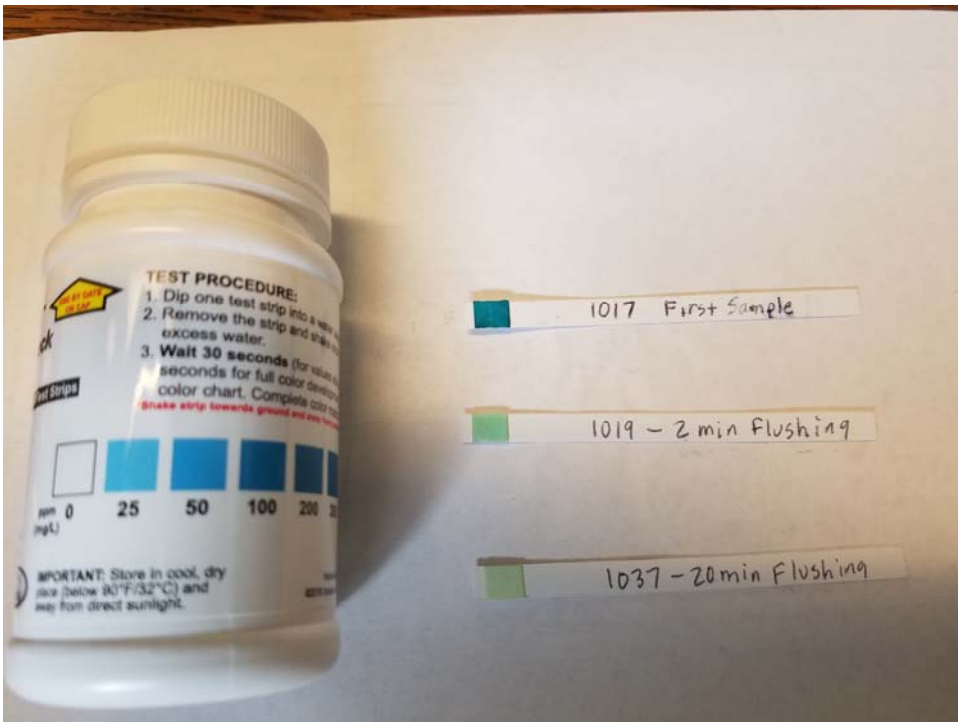

Photo 2: Test strip results of well chlorination (note photo makes the light blue look green)

Aqua Tech Laboratory
PO Box 1205 • 505 W Main, Ste 320
Lewistown, MT 59457
406/ 538-6988

REPORT OF BACTERIOLOGICAL EXAMINATION OF WATER SAMPLES

09627

One Form Per Same PWSID ***Return All Copies*** ***Please Press Firmly***

PWSID# 00325 System Name: Sand Coulee W. D. Phone: 406-736-5103

Collection Date: 6-5-17 Collected By: Keat Luoma County: Cascade

Certified Operator: Keat Luoma Operator Certification No.: 5898

Sample Type* R/S/RPTS	Sample Site** Code	Sample Site** Name	Time of Collection	Chlorine RES P.P.M.	Lab No.	Count cfu per 100ml	A = Absent / P = Present Total Coliform	Fecal Coliform	E.Coli	HPC (cfu/ml)	Set Time	Method
S	1.	Well #6 #1	1335		51717		A		A		1438	9223
S	2.	Well #6 #2	1335		51718		A		A		1	1
	3.											
	4.											
	5.											
	6.											
	7.											

Name: Sand Coulee, W D.

Street: P.O. Box 97

City & State: Sand Coulee, MT Zip: 59472

RESULTS of samples at the time received indicated that the water was:
(A)Satisfactory at this time (2) ( )Unsatisfactory
( )Send ___ repeat samples ASAP***

Paid $ ___ Cash MO CK# ___
Date Set: 6/6/17 Analyst: [signature]
Date Reported: 6/7/17 Analyst: [signature]
Date Notified: DEQ 6/7 Analyst: [signature]

*** See Back of Yellow Form For Explanations**

Certified by the Montana Department of Health and Environmental Sciences according to the Federal Drinking Water Standards