Appendix A
Siting Study Supplemental Data

A-1 Transmission Line Subroute Comparison Table
A-2 Resource Impact Table by Alternatives
A-3 Siting Study List of References and Persons Contacted

Appendix A-1: Transmission Line Subroute Summary

									Composite Modified Impact (Miles)			
Name	Links	Length	Number of Existing Line Crossings	Number of Stream Crossings	Agricultural (Miles)	Slope >20% (Miles)	Access Rd Parallel (Miles)	Existing ROW (Miles)	Exclusion	High	Moderate	Low
1	1	47.4	None	4	7.9	10.1	3.8	18.9	1.1	14.4	27.8	4.2
	2*	**39.4**	**None**	**2**	**2.4**	**18.4**	**1.8**	**4.5**	**0.0**	**19.7**	**15.7**	**4.1**
2	**7,18***	**43.4**	**5 (230-1;161-2;100-2)**	**3**	**2.7**	**8.8**	**4.7**	**9.0**	**0.7[1]**	**13.8**	**17.6**	**11.3**
	8,9,10,16	52.2	7 (230-1;161-3;100-3)	7	9.7	13.9	4.9	26.3	2.0	23.0	15.2	12.3
3	17	95.7	None	6	2.5	33.6	4.9	1.7	0.0	36.9	57.6	1.3
	18,24,28*	**104.1**	**1 (161-1)**	**9**	**9.9**	**19.8**	**13.5**	**48.5**	**1.1[1]**	**30.8**	**50.8**	**21.5**
4	37	75.8	2 (161-1;69-1)	0	32.1	0.0	7.8	22.0	3.3	31.6	16.8	24.2
	38,39*	**75.3**	**2 (161-1;69-1)**	**0**	**6.0**	**0.0**	**14.5**	**9.3**	**0.0**	**10.2**	**11.5**	**53.7**
5	**28,33***	**45.5**	**None**	**4**	**1.6**	**10.3**	**9.4**	**0.0**	**0.0**	**11.5**	**26.6**	**7.4**
	29,30	58.6	None	9	9.6	9.8	13.7	43.4	2.0	26.3	13.7	16.7
6	**19***	**25.6**	**None**	**1**	**0.0**	**5.7**	**3.0**	**0.0**	**0.0**	**5.7**	**9.0**	**11.0**
	20,21	31.1	None	3	4.0	7.5	3.0	15.4	0.0	8.7	16.6	5.9
7	**19,26***	**30.4**	**1 (161-1)**	**1**	**0.0**	**6.9**	**4.7**	**0.0**	**0.0**	**6.9**	**12.2**	**11.5**
	20,22,23	35.4	1 (161-1)	3	1.3	10.0	8.7	19.1	0.0	10.7	17.5	7.4
8	3,9,11	50.3	1 (100-1)	6	5.6	18.1	2.7	26.9	0.0	29.0	9.2	7.3
	4,5*	**39.9**	**1 (100-1)**	**4**	**3.6**	**11.4**	**2.9**	**7.8**	**0.0**	**14.5**	**16.5**	**9.1**
9	5,12	44.4	1 (Unk-1)	3	2.3	13.8	2.0	12.2	0.0	16.1	17.6	10.8
	6*	**43.9**	**None**	**4**	**3.3**	**13.4**	**5.0**	**13.1**	**0.5[1]**	**14.6**	**15.5**	**13.4**
10	3,9,11,12	57.5	2 (100-1;Unk-1)	7	6.2	21.0	3.0	39.1	0.0	33.1	13.9	10.7
	4,5,12	52.1	2 (100-1;Unk-1)	5	4.2	14.3	3.2	20.0	0.0	18.6	21.2	12.5
	4,6*	**51.6**	**1 (100-1)**	**6**	**5.2**	**13.9**	**6.2**	**20.9**	**0.5[1]**	**17.1**	**19.1**	**15.1**
11	15,18	12.5	None	1	1.0	3.1	1.3	11.9	0.0	3.5	4.6	4.5
	16*	**9.6**	**None**	**1**	**0.4**	**4.0**	**0.6**	**0.0**	**0.0**	**4.0**	**2.8**	**2.8**
DC	36,42	123.5	4 (230-4)	7	8.9	24.0	26.4	32.0	1.3	56.6	31.3	34.3
	35,39,40,41,42*	**158.2**	**7 (230-4;161-1;Unk-2)**	**0**	**18.7**	**0.2**	**29.8**	**156.4**	**0.0**	**50.8**	**10.1**	**97.4**

Key:
*** Route carried forward in alternatives.**
[1] Subdivided land; detailed siting and analysis required.

Appendix A-2: Resource Impacts by Alternative

Resource Impact Table

	Alt	Links	Length	Composite*				Biological*				Cultural*				Earth				Land Use				Visual*				Water			
				E	H	M	L	E	H	M	L	E	H	M	L	E	H	M	L	E	H	M	L	E	H	M	L	E	H	M	L
TOWNSEND ROUTES	A	4, 6, 13, 19, 25, 30, 34, 38, 39, 40	330.3	3.2	120.9	102.9	103.9	1.1	3.8	88.7	237.3	0.0	3.0	29.8	298.1	0.0	45.4	44.0	241.5	1.4	50.7	20.1	258.0	0.0	38.0	22.8	270.1	0.0	0.0	7.2	323.7
		MODIFIED VALUES		3.2	113.8	76.5	137.4	1.1	0.0	22.1	307.7	0.0	0.0	9.3	321.6									0.0	32.8	28.0	270.1				
	B	**4, 6, 13, 19, 26, 27, 32, 35, 39, 40**	**301.3**	**3.0**	**155.4**	**90.6**	**53.0**	**0.0**	**8.9**	**110.4**	**182.7**	**0.0**	**2.8**	**27.0**	**272.2**	**0.0**	**52.9**	**53.0**	**196.1**	**0.5**	**66.1**	**15.1**	**219.6**	**1.8**	**46.9**	**41.2**	**212.1**	**0.0**	**0.0**	**1.3**	**300.7**
		MODIFIED VALUES		**3.0**	**117.2**	**93.9**	**87.9**	**0.0**	**0.0**	**16.2**	**285.8**	**0.0**	**0.0**	**10.1**	**291.9**									**1.8**	**0.0**	**61.8**	**238.4**				
	C	3, 9, 10, 16, 24, 28, 33, 34, 38, 39, 40	336.8	1.1	129.4	116.6	90.3	0.0	5.5	118.7	213.2	0.0	0.2	12.6	324.6	0.0	56.8	51.1	229.5	1.1	52.1	26.6	257.6	0.0	27.9	14.5	295.0	0.0	0.0	6.6	330.8
		MODIFIED VALUES		1.1	126.2	92.4	117.7	0.0	0.4	55.8	281.2	0.0	0.0	6.0	331.4									0.0	27.6	14.8	295.0				
	D	3, 9, 10, 16, 24, 29, 31, 32, 35, 39, 40	323.8	2.9	182.4	91.6	47.6	0.0	11.2	124.5	188.8	0.0	1.3	16.8	306.4	0.0	65.8	55.8	202.9	1.1	75.8	30.1	217.5	1.8	56.1	26.5	240.1	0.0	0.0	0.6	323.9
		MODIFIED VALUES		2.9	147.4	97.7	76.5	0.0	0.0	28.1	296.4	0.0	1.1	6.3	317.1									1.8	14.1	53.5	255.1				
RINGLING ROUTES	E	2, 7, 18, 24, 28, 33, 34, 38, 39, 40	353.5	1.8	128.3	133.0	90.8	0.0	5.8	139.8	208.3	0.0	0.2	13.6	340.1	0.0	58.6	67.4	227.9	1.8	48.8	28.8	274.5	0.0	26.9	13.7	313.3	0.0	0.0	6.5	347.4
		MODIFIED VALUES		1.8	124.8	109.2	118.1	0.0	0.4	73.4	280.1	0.0	0.0	5.6	348.3									0.0	26.6	14.0	313.3				
	F	2, 8, 9, 11, 12, 13, 19, 25, 30, 34, 38, 39, 40	361.6	4.0	144.2	112.8	101.4	1.1	3.2	99.1	259.0	2.0	0.2	18.8	341.4	0.0	59.4	58.2	244.8	0.9	62.6	21.8	277.1	0.0	40.2	22.8	299.4	0.0	0.0	6.4	356.0
		MODIFIED VALUES		4.0	137.6	86.3	134.5	1.1	0.0	23.2	338.1	2.0	0.0	4.6	355.8									0.0	32.8	30.2	299.4				
	G	2, 8, 9, 11, 12, 13, 19, 26, 27, 32, 35, 39, 40	332.7	3.8	178.7	100.5	50.5	0.0	8.3	120.8	204.4	2.0	0.0	16.0	315.5	0.0	66.9	67.2	199.4	0.0	78.0	16.8	238.7	1.8	49.1	41.2	241.4	0.0	0.0	0.5	333.0
		MODIFIED VALUES		3.8	141.0	103.7	85.0	0.0	0.0	17.3	316.2	2.0	0.0	5.4	326.1									1.8	0.0	64.0	267.7				
	H	2, 7, 18, 24, 29, 31, 32, 35, 39, 40	340.5	3.6	181.3	108.0	48.1	0.0	11.5	145.6	183.9	0.0	1.3	17.8	321.9	0.0	67.6	72.1	201.3	1.8	72.5	32.3	234.4	1.8	55.1	25.7	258.4	0.0	0.0	0.5	340.5
		MODIFIED VALUES		3.6	146.0	114.5	76.9	0.0	0.0	45.7	295.3	0.0	1.1	5.9	334.0									1.8	13.1	52.7	273.4				
	230	14, 23, 27, 32, 35, 39, 40	254.2	3.3	139.8	80.2	31.3	0.0	9.8	120.2	124.6	0.0	0.0	8.9	245.7	0.0	43.6	44.6	166.4	1.5	66.3	13.2	173.6	1.8	45.4	42.3	165.1	0.0	0.0	0.7	253.9
		MODIFIED VALUES		3.3	104.7	76.5	70.1	0.0	9.8	0.0	244.8	0.0	0.0	0.0	254.6									1.8	0.0	45.4	207.4				
	DC	4,6,13,19,26,27,32,35, 39,40,41,42	385.1	3.0	165.7	97.5	119.4	0.0	8.9	110.3	266.4	0.0	2.8	27.0	355.8	0.0	53.1	53.8	278.7	1.2	75.0	15.9	293.5	1.8	48.1	46.8	288.0	0.0	0.0	1.0	384.6
		MODIFIED VALUES		3.0	126.3	96.4	159.9	0.0	0.0	16.2	369.4	0.0	0.0	10.1	375.5									1.8	0.0	63.0	320.8				

A-3 References

LAND USE

Anaconda-Deerlodge County, Montana. 2005. Anaconda-Deerlodge County Growth Policy.

Bannock County, Idaho. Bannock County Second Century, the 1995-2020 Comprehensive Plan.

Beaverhead County, Montana. 2005. Beaverhead County Growth Policy.

Bingham County, Idaho. 2005. Bingham County Comprehensive Plan.

BLM. 2006. Record of Decision and Approved Dillon Resource Management Plan. Dillon Field Office, Dillon, Montana.

BLM. 2005. Duck Creek Federal Coal Bed Natural Gas Project Environmental Assessment. Casper Field Office, Casper, Wyoming.

BLM. 2003. Atlantic Rim Interim Drilling Project, Red Rim Pod Environmenal Assessment. Rawlins Field Office, Rawlins, Wyoming.

BLM. 2003. Copper Ridge Shallow Gas Project Environmental Assessment. Rock Springs Field Office, Rock Springs, Wyoming.

BLM. 2003. Copper Ridge Shallow Gas Project Environmental Assessment. Rock Springs Field Office, Rock Springs, Wyoming.

BLM. 2003. Platte Amendments to Shoshone Field Office Land Use Plans for Land Tenure Adjustment and Areas of Critical Environmental Concern. Upper Snake River District, Shoshone Field Office, Shoshone, Idaho.

BLM. 2003. Environmental Assessment for Anadarko E&P Company L.P. Monell CO2 Pipeline Project. Rock Springs Field Office, Rock Springs, Wyoming.

BLM. 2003. Final South Powder River Basin Coal Environmental Impact Statement. Volume 1 of 2. Casper Field Office, Casper, Wyoming.

BLM. 2003. Final South Powder River Basin Coal Environmental Impact Statement. Volume 2 of 2. Casper Field Office, Casper, Wyoming.

BLM. 2001. Lemhi Resource Management Plan Amendment and Decision Record. Salmon Field Office, Salmon, Idaho.

BLM. 1990. Final Rock Springs Wilderness Environmental Impact Statement. Rock Springs District, Rock Springs, Wyoming.

BLM. 1990. Great Divide Resource Area Record of Decision and Approved Resource Management Plan. Rawlins District Office. Rawlins, Wyoming.

BLM. 1997. Record of Decision and Green River Resource Management Plan. Green River Resource Area. Rock Springs District. Rock Springs, Wyoming. October 1997.

BLM. Draft 1997. Final Pocatello Resource Management Plan and EIS. Idaho Falls District, Idaho Falls, Idaho.

BLM. 1986. Garnet Resource Area Resource Management Plan. Butte District, Butte, Montana.

BLM. 1986. Kemmerer Resource Management Plan Record of Decision. Kemmerer Resource Area. Rock Springs, Wyoming. June 1986.

BLM. 1985. Medicine Lodge Resource Management Plan. Idaho Falls District, Idaho Falls, Idaho.

BLM. 1985. Monument Resource Management Plan. Shoshone District, Shoshone, Idaho.

BLM. 1985 .Platte River Resource Area Management Plan Record of Decision. Casper District Office, Casper, Wyoming.

BLM. 1982. Big Lost Management Framework Plan. Idaho Falls District, Idaho Falls, Idaho.

BLM. 1980. Big Desert Management Framework Plan. Idaho Falls District, Idaho Falls, Idaho.

BLM. 1978. Little Lost-Birch Creek Management Framework Plan. Idaho Falls District, Idaho Falls, Idaho.

BLM. 1984. Record of Decision for the FEIS/Headwaters Resource Management Plan. Butte and Lewistown Districts. Butte and Lewistown, Montana.

BLM. 1981. Sun Valley Management Framework Plan. Shoshone District, Shoshone, Idaho.

Bonneville County, Idaho. 2004. Bonneville County Comprehensive Plan.

Broadwater County, Montana. 2003. Broadwater County Growth Policy.

Butte-Silver Bow County, Montana. 1995. Butte-Silver Bow Comprehensive Master Plan.

Butte County, Idaho. 2006. Butte County Comprehensive Plan.

Camas County, Idaho. 2006. Camas County Comprehensive Plan.

Custer County, Idaho. 2004. Custer County Comprehensive Plan.

Federal Energy Regulatory Commission. 2005. Entrega Pipeline Project. Final Environmental Impact Statement.

Fremont County, Idaho. 1990. Fremont County Comprehensive Plan.

Gallatin County, Montana. 2003. Gallatin County Growth Policy.

Gooding County, Idaho. 1999. Gooding County Comprehensive Plan.

Idaho Transportation Department, Transportation Planning Division, with assistance from Wilbur Smith Associates. 1996. Idaho State Rail Plan.

Jefferson County, Idaho. 2005. Jefferson County Comprehensive Plan.

Jefferson County, Montana. 2003. Jefferson County Growth Policy.

Jerome County, Idaho. 1997. Jerome County Comprehensive Plan.

Lincoln County, Idaho. 2003. Lincoln County Comprehensive Plan.

Madison County, Idaho. 1996. Madison County Comprehensive Plan.

Madison County, Montana. Madison County Comprehensive Plan, 1997 Update.

Meagher, Montana. 2003. Meagher County Growth Policy.

Minidoka County/City of Rupert, Idaho. 2001. Minidoka County/City of Rupert Comprehensive Plan.

Montana Department of Transportation, submitted by R.I. Banks & Associates, Inc., in association with Harding ESE. 2000. 2000 Montana State Rail Plan Update.

NPS and BLM. 2005. Craters of the Moon National Monument and Preserve Proposed Management Plan/FEIS. Rock Springs Field Office, Idaho.

Park County, Montana. 2006. Park County Growth Policy.

Powell County, Montana. 2006. Powell County Growth Policy.

Power County, Idaho. 1995. Power County Comprehensive Plan.

U.S. Department of Transportation, Federal Aviation Administration, National Aeronautical Charting Office. 71st Edition. July 6, 2006. Great Falls Sectional Aeronautical Chart.

U.S. Department of Transportation, Federal Aviation Administration, National Aeronautical Charting Office 75th Edition. April 13, 2006. Salt Lake City Sectional Aeronautical Chart.

U.S. Forest Service. 1987. Forest Plan. Gallatin National Forest.

U.S. Forest Service. 1986. Forest Plan. Helena National Forest.

U.S. Forest Service. 1987. Land Resource Management Plan for the Challis National Forest.

U.S. Forest Service. 1987. Record of Decision for USDA Forest Service. Land and Resource Management Plan and EIS for the Gallatin National Forest.

U.S. Forest Service. 1988. Land and Resource Management Plan. Salmon National Forest.

U.S. Forest Service. 1997. Record of Decision/FEIS for the Revised Forest Plan. Intermountain Region. Targhee National Forest.

U.S. Forest Service. 2002. Record of Decisions for the Final Environmental Impact Statement and Land and Resource Management Plan Revision for Thunder Basin National Grassland. USDA Forest Service, Rocky Mountain Regional Office, Denver, Colorado.

U.S. Forest Service. 2003. Land and Resource Management Plan. Sawtooth National Forest.

U.S. Forest Service. 2003. Revised Forest Plan Wasatch-Cache National Forest. USDA Forest Service, Intermountain Region, Ogden, Utah.

U.S. Forest Service. 2005. Revised Land and Resource Management Plan. Draft Forest Plan. Beaverhead-Deerlodge National Forest.

VISUAL RESOURCES

BLM. 1984a. Visual Resource Management, Manual 8400. Available at http://www.blm.gov/nstc/VRM/8400.html.

BLM. 1984b. Upland Visual Resource Inventory and Evaluation, Manual 8411.

BLM. 1986. Visual Resource Inventory, Manual H-8410-1.

National Scenic Trails (NST). 2006. National Landscape Coservation System website. Avaiable at http://www.blm.gov/nlcs/nsht/index.html

National Scenic Byways Online (NSBO). 2006. Available at http://www.byways.org.

State of Idaho Scenic, Historic, and Back County Byways (IDS). 2006. Idaho Tranportation Department. Available at http://itd.idaho.gov/planning/reports/scenic/byways.html

State of Montana Website: Scenic Drives. Available at http://travel.state.mt.us/tripplanner/transportation/drive.htm

United States Department of Agriculture (USDA), Forest Service. 1995. Landscape Aesthetics. A Handbook for Scenery Management. AH701.

USDA Forest Service, 1974. National Forest Landscape Management Vol. 2. Chapter 1, the Visual Management System. Agriculture Handbook #462.

CULTURAL RESOURCES

Beckes, Michael. 2006. Regional Archaeologist. Northern Region Heritage Office, U.S. Forest Service. Missoula, Montana. Personal communication on August 16, 2006.

Birnbaum, Charles A. 1994. *Preservation Brief 36: Protecting Cultural Landscapes: Planning, Treatment and Management of Historic Landscapes*. National Park Service. Washington, DC.

Bolling, Charles, and Matthew Seddon. 2005. *Antelope-Wasatch Front Transmission Line Cultural Resource Advisory Report.* SWCA Environmental Consultants, Inc. Prepared for POWER Engineers, Inc.

Bureau of Land Management. 2003. *Decision Record, Whitetail-Pipestone Travel Management Plan and Environmental Assessment.* MT-070-01-35. Bureau of Land Management, Butte Field Office. Butte, Montana.

Bureau of Land Management. 2005. *Proposed Dillon Resource Management Plan and Final Environmental Impact Statement.* BLM/MT/PL-05/008+1610. Bureau of Land Management, Dillon Field Office. Dillon, Montana.

Byrne, John. 2006. Database Manager. National Register of Historic Places, National Park Service. Washington, D.C. Personal communication on July 25, 2006.

Cresswell, Lisa. 2006. Archaeologist. Shoshone Field Office, Bureau of Land Management. Shoshone, Idaho. Personal communication on July 20 and July 27, 2006.

Davis, Belinda. 2006. Historic Sites Registrar. Idaho State Historical Society. Boise, Idaho. Personal communication on July 26, 2006.

Deaver, Sherri, and Ken Deaver. 1986. *An Archeological Overview of Butte District Prehistory.* Bureau of Land Management Cultural Resource Series, Number 2. Bureau of Land Management Montana State Office. Billings, Montana.

Hampton, Kate. 2006. National Register Coordinator. Montana Historical Society. Helena, Montana. Personal communication on August 24, 2006.

Hill, Richard. 2006. Archaeologist. Idaho Falls Field Office, Bureau of Land Management. Idaho Falls, Idaho. Personal communication on August 1, 2006.

Hutchison, Daniel, and Larry Jones. 1993. *Emigrant Trails of Southern Idaho.* Bureau of Land Management and Idaho State Historical Society. Boise, Idaho.

Idaho National Laboratory. 2005. Idaho National Laboratory Cultural Resource Management Plan. U.D. Department of Energy, Idaho Operations Office.

Kiely, Carolyn. 2006. Archaeologist. Butte Field Office, Bureau of Land Management. Butte, Montana. Personal communication on August 1and 2, 2006.

King, Glenda. 2006. Curator of Archaeology. Idaho State Historical Society. Boise, Idaho. Personal communication on July 26, 2006.

Lyon, Jason. 2006. Archaeologist. Nez Perce National Historical Park, National Park Service. Spalding, Idaho. Personal communication on July 25, 2006.

Lytle, John. 2006. Archaeologist. Burley Field Office, Bureau of Land Management. Burley, Idaho. Personal communication on August 3, 2006.

McDonald, Stan. 2006. Idaho State Archaeologist. Bureau of Land Management. Boise, Idaho. Personal communication on August 10, 2006.

Miller, Susanne. 2006. Archaeologist, Private Consultant. Idaho Falls, Idaho. Personal communication on July 27, 2006.

Murdo, Damon. 2006. Cultural Records Manager. Montana Historical Society. Helena, Montana. Personal communication on July 24, July 26, August 4, and August 22, 2006.

National Park Service. 2006. *List of National Historic Landmarks by State.* National Historic Landmarks Survey, National Park Service. Washington, DC.

Neitzel, Suzi. 2006. Deputy SHPO. Idaho State Historical Society. Boise, Idaho. Personal communication on August 3, 2006.

Pace, Brenda Ringe. 2006. Archaeologist. Bechtel BWXT and Idaho National Laboratory. Idaho Falls, Idaho. Personal communication on August 10, 2006.

Parker, P.L., and T.F. King. 1998. *Guidelines for Evaluating and Documenting Traditional Cultural Properties.* National Register Bulletin 38, National Register of Historic Places, National Park Service, U.S. Department of the Interior. Washington, D.C.

Plager, Sharon, Tanya Johnson, Richard Holmer, and Brenda Ringe Pace. 2006. *Archaeological Predictive Model for the Idaho National Laboratory.* U.S. Department of Energy, Idaho National Laboratory, Cultural Resource Management. Idaho Falls, Idaho.

Reid, Ken. 2006. State Archaeologist, Deputy SHPO. Idaho State Historical Society. Boise, Idaho. Personal communication on July 21 and August 23, 2006.

Ryan, Mike. 2006. Forest Archaeologist. Beaverhead-Deerlodge National Forest, U.S. Forest Service. Dillon, Montana. Personal communication on August 4, 2006.

Ryan, Mike, and Mark Sant. n.d. Heritage Resources in the Gravelly Landscape. Accessed on August 24, 2006 at http://www.fs.fed.us/rl/b-d/projects/gravelly/chap_1/chap1-10_heritage.htm.

Sant, Mark. 2006. Archaeologist. Dillon Field Office, Bureau of Land Management. Dillon, Montana. Personal communication on August 3, 2006.

Smith, Gary. 2006. Montana State Archaeologist. Bureau of Land Management. Billings, Montana. Personal communication on July 28, 2006.

U.S. Forest Service, Bureau of Land Management, Montana SHPO, and Advisory Council on Historic Preservation. 1998. *Programmatic Agreement Regarding the Management of Historic Placer and Lode Mining Properties in Montana.* Billings, Montana.

Warhank, Josef. 2006. Historian/Compliance Officer. Montana Historical Society. Helena, Montana. Personal communication on August 15, 2006.

Wilmoth, Stan. 2006. State Archaeologist. Montana Historical Society. Helena, Montana. Personal communication on July 28, August 2, and August 3, 2006.

BIOLOGICAL RESOURCES

BLM. 2006. Idaho BLM Special Status Animal Species for Districts and Field Offices. Available at http://www.id.blm.gov/information/sss/Animal_List_FINAL.pdf. Accessed on August 16, 2006.

BLM. 2006a. Dillon Resource Management Plan. February 7, 2006.

BLM. 2004. 2004 Montana/Dakotas Sensitive Species List. Instruction Memorandum No. MT-2004-082. July 28, 2004. 4 pp.

McGrath C.L., Woods A.J., Omernik, J.M., Bryce, S.A., Edmondson, M., Nesser, J.A., Shelden, J., Crawford, R.C., Comstock, J.A., and Plocher, M.D. 2002, Ecoregions of Idaho (color poster with map, descriptive text, summary tables, and photographs): Reston, Virginia, U.S. Geological Survey (map scale 1:1,350,000).

MFWP. 2006. Animal Field Guide: Trumpeter Swan. Available at http://fwp.mt.gov/fieldguide/detail_ABNJB02030.aspx. Accessed on August 16, 2006.

Omernik, J.M. 1987. "Ecoregions of the Conterminous United States. Map (scale 1:7,500,000)," Annals of the Association of American Geographers 77:118-125.

Redmond, R.L., M.M. Hart, J.C. Winne, W.A. Williams, P.C. Thornton, Z. Ma, C.M. Tobalske, M.M. Thornton, K.P. McLaughlin, T.P. Tady, F.B. Fisher, S.W. Running. 1998. The Montana Gap Analysis Project: final report. Unpublished report. Montana Cooperative Wildlife Research Unit, University of Montana, Missoula. xiii + 136 pp. + appendices.

Scott, J.M., C.R. Peterson, J.W. Karl, E. Strand, L.K. Svancara, and N.M. Wright. 2002. A

Gap Analysis of Idaho: Final Report. Idaho Cooperative Fish and Wildlife Research Unit.

Moscow, ID.

USFS. 2006. USFS Region 1 Sensitive Species List. Available at http://www.fs.fed.us/r1/projects/wwfrp/sensspecies. Accessed on August 10, 2006.

USDI. National Biological Service. 2006. Our Living Resources. Greater Yellowstone Ecosystem Website. Available at http://biology.usgs.gov/s+t/noframe/r114.htm. Accessed 9/29/2006

USFWS. 2006a. Endangered, threatened, proposed, and candidate species: Montana County. August 2006. Available at http://montanafieldoffice.fws.gov/Endangered_Species/Listed_Species/countylist.pdf. Accessed on August 16, 2006.

USFWS. 2006b. Endangered, threatened, and candidate species: Idaho. August 2006. Available at http://www.fws.gov/idahoes/idahot&e.html. Accessed on August 16, 2006.

USFWS. 2003. Final Conservation Strategy for the Grizzly Bear in the Greater Yellowstone Area. Available at http://mountain-prairie.fws.gov/species/mammals/grizzly/ConservationStrategygrizzlybearGYA.pdf. Accessed on August 17, 2006.

WATER RESOURCES AND WETLANDS

Forsgren Associates, Anderson Consulting Engineers, Leonard Rice Engineers, and BBC Research and Consulting. 2001. Bear River Basin Water Plan. Wyoming State Water Plan. Prepared for the Wyoming Water Development Commission. Available at http://waterplan.state.wy.us/plan/bear/bear-plan.html. Accessed on November 2, 2005.

HKM Engineering, Lord Consulting, Watts and Associates. 2002. Northeast Wyoming River Basins Plan. Prepared for Wyoming Water Development Commission Basin Planning Program. Available at http://waterplan.state.wy.us/plan/newy/execsumm.pdf. Accessed on November 2, 2005.

State of Utah. 2004a. Bear River Basin: Planning for the Future. State of Utah Water Plan. Natural Resources, Division of Water Resources. Available at http://www.water.utah.gov/planning/waterplans.asp. Accessed on November 2, 2005.

State of Utah. 2004b. Weber River Basin: Planning for the Future. State of Utah Water Plan. Natural Resources, Division of Water Resources. Available at http://www.water.utah.gov/planning/waterplans.asp. Accessed on November 3, 2005.

State of Wyoming. 2005. North Platte River Basin Data Inventory. Wyoming State Water Plan. Available at http://waterplan.state.wy.us/sdi/NP/NP-over.html. Accessed on November 2, 2005.

States West Water Resources Corporation. 2001. Green River Basin Water Plan. Prepared for Wyoming Water Development Commission Basin Planning Program. Available at http://waterplan.state.wy.us/plan/green/green-plan.html. Accessed on November 2, 2005.

University of Wyoming. 2005. Geographic Information Science Center, Clearinghouse Data List. Available at http://www.sdvc.uwyo.edu/clearinghouse/datalist.html. Accessed on October 26, 2005.

Utah Division of Information Technology Services, Automated Geographic Reference Center, Statewide Geographic Information Database, SGID & GIS data. Available at http://agrc.utah.gov/agrc_sgid/sgidlib/statewide_shp.htm#Geology. Accessed on October 26, 2005.

Wyoming Gap Analysis Project.1997. 1:100,000-scale Hydrography for Wyoming (enhanced DLGs): Spatial Data and Visualization Center, Laramie, Wyoming. 1:100,000. Obtained from University of Wyoming, Wyoming Natural Resources Clearinghouse Data Atlas, Wyoming Geographic Information Science Center. Available at http://www.sdvc.uwyo.edu/24k/hydro100.html. Accessed on October 26, 2005.

EARTH RESOURCES AND SLOPE

Digital compilation of "Landslide Overview Map of the Conterminous United States, by Dorothy H. Radbruch-Hall, Roger B. Colton, William E. Davies, Ivo Lucchitta, Betty A. Skipp, and David J. Varnes, 1982

Swelling Clays Map Of The Conterminous United States
by W.W. Olive, A.F. Chleborad, C.W. Frahme, Julius Schlocker,
R.R. Schneider, and R.L Shuster; 1989

An Occurrence and Distribution survey of expansive materials in the United States by physiographic area, by D.M. Patrick and D.R. Snethen, 1976

Davies, W.E., Simpson, J.H., Ohlmacher, G.C., Kirk, W.S., and Newton, E.G., 1984, Engineering Aspects of Karst Map: U.S. Geological Survey

PERSONS CONTACTED

Kelly Acree, *Realty Specialist*, BLM – Butte Field Office

Nancy Anderson, *Field Manager*, BLM – Missoula Field Office

Lori Armstrong, *Field Manager*, BLM – Shoshone Field Office

Paul Aston, *Community Development Director*, Minidoka County, Idaho - Community Development, Building and Zoning Department (8/15/06)

Lydia Bailey, *GIS and National Resource Data Manager*, Montana Fish, Wildlife and Parks, Helena

Scott Barker, *Realty Specialist*, BLM – Burley Field Office

Barbera Bassler, *Planning and Environmental Coordinator*, BLM Shoshone Field Office

Duane Bays, *Database Anylist/GIS Specialist*, Montana Department of Environmental Quality

Linda Bouck, *Planning Director*, Anaconda-Deerlodge County - Montana, Planning (8/30/2006)

Tim Bozorth, *Field Manager,* BLM – Dillon Field Office

Christa Braun, *Cartographic Technician*, BLM State Office-Idaho, Boise

Nichole Brown, *Planning Assistant*, Broadwater County Montana - Planning and Addressing Department (8/30/2006)

Thomas Clifford, *Forest Supervisor* – Helena National Forest

Larry Cole, *Realty Specialist*, Helena National Forest

Bethany Crenshaw, *GIS Specialist*, Upper Snake Field Office,

Bud Cribley, *BLM Acting State Director*, Idaho – Boise

Brian Clifton, *Sanitarian*, Meagher County, Montana (8/30/2006)

Phil Damon, *Field Manager*, BLM – Pocatello Field Office

Judy Davis, *Administer*, Gooding County, Idaho - Planning and Zoning (8/15/2006)

Jim Devitt,, *Forest Planner*, Gallatin National Forest

Linda Foster, *Computer Assistant,* GIS Salmon-Challis National Forest

R. Alan Gilda, *Mining/Civil Engineer*, Montana Department of Environmental Quality

Fred Haas, Gallatin National Forest

Melodie Halstead, *Administrator*, Bingham County, Idaho - Planning and Zoning (8/15/2006)

Becki Heath, *Forest Supervisor* – Gallatin National Forest

Dennis Heffner, *Planning Staff Officer*, Helena National Forest

Steve Hess , *Planner*, Butte-Silver Bow County, Montana - Planning Department (8/30/2006)

Rick Hoaling, *Field Manager,* BLM-Butte Field Office

Gary Howard, *Lands Program Lead,* Beaverhead-Deerlodge National Forest

Nancy Johnson, *Reclamation Specialist,* Montana Department of Envoironemtnal Quality

Daniell Jose, *Administrator*, Jefferson County, Idaho - Planning and Zoning (8/15/2006)

Curtis Keetch, *Wildlife Biologist*-Targhee National Forest

Lisa Klinger, *Special Uses*, U.S. Forest Service – Caribou-Targhee National Forest (7/26/2006)

Debbie Kovar, *Realty Specialist*, BLM – Shoshone Field Office

Sarah Lamar, *Wildlife Biologist* -Butte BLM

Howard Lemm, *BLM Acting State Director*, Montana- Billings

Lucy Lutschg, Butte County, Idaho - Planning and Zoning (8/14/2006)

Rick Maggio, *Supervisory Land Use Specialist,* BLM – Dillon Field Office

Leaf Magnuson, *Writer/Editor BDNF Revison*, Beaverhead-Deerlodge National Forest

George Matejko, *Forest Supervisor* – Salmon-Challis National Forest

Bill Mattice, *Planning Board President*, Powell County, Montana (8/30/2006)

Cindy Lou McDonald, *Supervisory Geographic Sciences Specialist*, BLM State Office-Idaho, Boise

Ken Miller, *Field Manager*, BLM – Burley Field Office

Tom Moriarity, *Infrastructure Planning Manager,* Idaho National Laboratory

Martha Mousel, *GIS Specialist,* U.S. Forest Service – Caribou-Targhee National Forest (7/26/2006)

James O'Neill, *FPR GIS Coordinator,* Beaverhead-Deerlodge National Forest

Jan Parmenter, *Realty Specialist,* BLM - Idaho Falls District, Upper Snake Field Office

Jeff Patlovich, *Administrator,* Fremont County, Idaho - Planning and Building Department (8/15/2006)

Scott Powers, BLM

Bruce Ramsey, *Forest Supervisor* – Beaverhead/Deerlodge National Forest

Wendy Reynolds, *Field Manager,* BLM – Upper Snake Field Office

Tom Ring, *Environmental Science Specialist*, Montana Department of Environmental Quality

Art Rohrbacher, *Wildlife Program Manager*- Beaverhead-Deerlodge National Forest

T. O. Smith, *Comprehensive Fish and Wildlife Planning Coordinator*, Montana Fish, Wildlife and Parks

Julia Souder, US Department of Energy, Washington, D.C.

Norma Staaf, Salmon-Challis National Forest

Robert E. Steinlicht, *Building Administrator*, Power County, Idaho - Community Development, Building and Zoning Department (8/15/2006)

Harold Stepper, *Planner*, Jefferson County, Montana - Planning, Zoning, and Rural Addressing (8/30/2006)

Suzanne Stoddard, Bonneville County, Idaho - Planning, Zoning and Building Department

Steve Swain, *GIS Specialist,* Gallatin National Forest

Larry Timchak, *Forest Supervisor* – Caribou-Targhee National Forest

Judy Warrick, *GIS*, U.S. Forest Service – Caribou-Targhee National Forest (7/26/2006)

Earl Wilson, Camas County, Idaho - Planning and Zoning (8/15/2006)

Doug Wright , *Landscape Architect*, Beaverhead-Deerlodge National Forest

Appendix B
Detailed Design Criteria

STRINGING, CONSTRUCTION AND MAINTENANCE LOADS

The following conditions have been assumed for developing the stringing loads and ensuring that the construction and maintenance loadings do not exceed the capacity of the tower arm or other critical members:

Stringing - Loads applied at all phases and shield wires with all wires sloping down to pullers, tensioners or temporary anchors. The horizontal and vertical components of this load are derived from the wires at a 2 horizontal to 1 vertical slope (26.5°). Stringing loads on suspension towers are applied at all operating attachment points simultaneously. Stringing loads on dead-end towers are applied at working holes and at operating attachment points.

Maintenance – Attachment points will be provided on the structure cross-arms directly above the phase conductors as a support point for the wires during line maintenance. These points will be designed to support the vertical weight of 4 workmen and their equipment while suspended on the support point with the phase wires simultaneously attached in the worst case stringing configuration.

ASCE recommends an OLF=2.0 for dynamic C/M loading cases (i.e. stringing). Otherwise, a minimum OLF=1.5 is recommended. In addition, ASCE suggests worker loads of 250 lbs be applied to horizontal members of a structure, with no OLF. This is to ensure that all horizontal members have adequate flexural capacity to withstand any construction or maintenance loads that may be encountered.

NESC/ASCE HIGH WIND

The NESC references the ASCE manual 74 current edition wind map for the United States. The wind speeds used for wind pressure calculations on wire and structures are given as the maximum 3 second gust wind speed that is generated by an extreme wind event at 33 feet above the ground surface for an Exposure Category C (open terrain with scattered obstructions). Both codes recognize that special wind regions and wind in special geographically confined areas need to be investigated before applying code values. ASCE recognizes a topographic factor which can be applied to account for special terrain features. This factor should be considered in more detailed geographic analysis studies for the project.

The geographic region of Eastern Idaho and Southwestern Montana falls within the broad definition of a 90 mph maximum 3 second gust. Using conservative estimates for the structure and wire velocity exposure coefficient Kz and the gust response factor Grf, the wind pressure can be calculated. To account for taller tangents and uneven terrain a conservative value of Kz=1.3 and 1.4 is chosen for structure and wire respectively. This corresponds to a 115-165 ft total structure height and an average wire height. Similarly, assuming a worst case span length and structure height, a Grf=.86 and .72 is chosen for structure and wire respectively. Using an importance factor (I) and coefficient of drag (Cd) of 1.0, the extreme wind pressures of 23.2 and 20.9 psf for structure and wire respectively is required by code.

A value of 25.6 psf (100mph) wind with a 1.1 ocf is chosen for this study to be consistent with the Colstrip lines. This load will likely control some of the tower design.

NESC/ASCE COMBINED ICE AND WIND

The 2007 version of ASCE Manual 74 considers a combination of ice and wind loading. Often, this loading governs structure design. There are many forms of ice that can accumulate on a transmission wire and/or structure. Glaze ice, in-cloud icing, snow, and hoarfrost are such examples. For purpose of design, a glaze ice of uniform radial thickness and uniform density (57

pcf) is considered. In addition to the ice loads (primarily vertical and unbalanced longitudinal), a transverse wind load will also be considered for design as recommended by ASCE.

The region defined under the current ASCE ice and wind map looks at a 0.25" ice coupled with a 28 mph (2psf) wind. However, prior versions of ASCE manual 74 adopted the ice map provided by the Bennett (1959) publication which studied ice accretion on utility wires over a 9 year period. This map shows that glaze ice accretions of 1.0 inch radial are possible in our study area. The prior version of ASCE manual 74 also suggests using a combined wind that is 40% of the fastest mile wind in the 7-88 publication value of 70 mph for our region. For this reason, a heavy ice and wind of 1.0 inch with a 2 psf wind is recommended. These loadings approximate a 50 year return period.

To account for a prevalent cold front while the conductor is iced, ASCE recommends a temperature of 15 degrees be considered for design tensions. However, other publications suggest that a temperature of 0 degrees is more appropriate. For our study region, a temperature of 0 deg F is more appropriate when considering mean low temperatures at nearby weather stations during winter months.

NESC Heavy loading condition considers 4.0 psf wind, 0.5" ice, at a temperature of 0 degrees, initial conditions. An OLF of 1.65 is used for tension, 1.5 for vertical, and 2.5 for wind.

EXTREME WEATHER EVENTS

Although uncommon, tornados and microbursts are possible along the route. Towers that are subjected to these weather events can be reinforced economically such that minimal damage is sustained.

Microbursts - In geographic areas with unstable, very dry environments with surface temperature dew point spreads of 30-50 degrees coupled with significant amounts of mid-atmospheric level moisture as a source for weak showers, the potential for strong downdrafts or Microbursts is high. A microburst is typically less than 2.5 miles in diameter but can be destructive within that area. Winds are typically in the 80 to 115 mph range but have been estimated to be as high as 168 mph. Similarly, tornadic events have been documented in the vicinity of the line study area although the frequency is very low being perhaps 10-15 events over a 30 year period. Most, if not all, of these tornadic events are described as F2 (113-157 mph) or less events.

Because of the long line length involved, the potential for a severe wind event to occur at a tower location is higher. A comparison extreme wind case is being proposed which considers the impact of a 125 mph wind (40 psf) applied to the structure only in combination with the 100 mph wind on wire. An ocf of 1.0 is applied to this case.

It is also noted that the ASCE standard 7-88 wind map denotes a special wind region along the Idaho-Montana border where the line study area crosses. This and other special wind regions may require a design that considers local data which may exceed the 100 mph fastest wind speed defined.

UNBALANCED ICE LOADING

Generally, tangent structures with suspension insulator strings will not experience significant longitudinal loads due to ice imbalances. Because all structures are designed for broken wire loads, the unbalanced ice condition does not typically govern design.

However, this statement only holds true for long suspension assemblies. Consider the shield wire, which has a very short hardware assembly. In this case, most of the imbalance is transferred to the structure. When one span is iced, and the other is not; there is very little 'swing' to relax the tension, therefore creating a large longitudinal imbalance. It is not anticipated that the loads due to an unbalanced ice control when considering the temperature and ice thickness that would reasonably occur.

An unbalanced icing case considering ½" ice for conductors and shield wires is recommended.

LONGITUDINAL LOADING OF TOWER

Method 1 of ASCE guidelines for design of transmission structures suggests that all structures be designed for broken wire loads. This is also the approach that is taken by most lattice tower designs reviewed. ASCE recommends a broken wire load case under bare (no ice or wind) conditions, at average temperatures (30 °F for this study area). The vertical load, in this case, should be considered *at least* 50% of the intact vertical load at everyday temperatures. This criterion is less conservative than most tower designs reviewed. The consensus design applies either a basic code value glaze ice with no wind or a moderate wind with no ice, depending on the region.

The ASCE loading criteria for broken wire loads is based on the 'residual static load' (RSL), which corresponds to a broken wire condition, this being the static longitudinal load at a wire support point after breakage of a phase (all wires of a bundle) or of a ground wire, under everyday temperatures.

According to ASCE, the relaxation afforded by insulator string swing and support structure deflection should be considered in determining the RSL. In determining the conductor tension under the broken wire case, the swing of the insulator during a broken phase event would be modeled in line design software. The effect of swinging a suspension insulator into the unbroken span results in a significant reduction in tension. Tension reduction on the order of 30-40% of the unbroken phase wire tension are typical when a rigorous finite element analysis is performed. This loading event is recommended to be performed at phase and overhead ground wire locations. The overhead ground wire will have little load reduction because of no insulator swing tension relaxation.

In addition to individual tower strength requirements, the placement of failure containment structures at five mile intervals is recommended to arrest any significant events that could begin a cascading event in a line.

SAG TENSION

Tables 1 and 2 show sag-tension output for the 7/16" EHS shield wire and Lapwing conductor at a 1500 foot ruling span. The weather cases shown correlate with POWER Engineers proposed design criteria.

TABLE 1

Conductor: 7/16" 7 Strand Steel EHS
Area: 0.1156 Sq. In. **Dia:** 0.435 Inches **Weight:** 0.399 Lb.
Rated Tensile Strength: 20800 Lb.
Data from Chart No. 1-1293
English Units
Governing Condition: NESC Heavy Initial
Ruling Span: 1500 Ft.
Creep IS a Factor

Design Points						Final			Initial		
Temp F	Ice In	Wind Psf	K Lb/F	Weight Lb/F	Sag Ft	Tension Lb	RTS %	Sag Ft	Tension Lb	RTS %	Description
0	.50	4.00	.30	1.391	55.3	7150	34.3	54.34	7250*	34.9	NESC Heavy
60	0	25.6	.00	1.01	53.5	5346	25.7	52.13	5485	26.4	High Wind
0	1	2.00	.00	2.222	62.63	10069	48.4	62.63	10069	48.4	Hvy ice/wind
0	.25	2.00	.00	0.632	45.92	3887	18.7	44.08	4048	19.5	Broken wire
0	0	2.00	.00	.406	42.05	2724	13.1	39.68	2885	13.9	Stringing
32	.5	0.00	.00	0.981	52.03	5335	25.6	50.64	5480	26.3	32°/ 0.5" ice
-20	.00	0.00	.00	0.399	40.86	2757	13.3	38.47	2928	14.1	-20° F
0	.00	0.00	.00	0.399	41.93	2688	12.9	39.53	2849	13.7	0° F
30	.00	0.00	.00	0.399	43.5	2591	12.5	41.11	2741	13.2	30°F
60	.00	0.00	.00	0.399	45.04	2503	12	42.67	2641	12.7	60°F
120	.00	0.00	.00	0.399	48.05	2348	11.3	45.71	2467	11.9	120°F

* Design Condition
** Sag data generated using Alcoa Sag and Tension Software Sag10

MOT=Maximum Operating Temperature	Engineering Report	Date	Northwestern Energy Tower Loading 1500 ft Ruling Span 7/16" 7 strand steel EHS
	Compiled: Dan Zacharda	10/23/06	
	Checked: Darel Tracy		

TABLE 2

Conductor: 1590 kcmil 45/7 Strand ACSR "Lapwing"
Area: 1.335 Sq. In. **Dia:** 1.504 Inches **Weight:** 1.792 Lb.
Rated Tensile Strength: 42200 Lb.
Data from Chart No. 1-1019
English Units
Governing Condition: NESC Heavy Initial
Ruling Span: 1500 Ft.
Creep IS a Factor

Design Points						Final			Initial		
Temp F	Ice In	Wind Psf	K Lb/F	Weight Lb/F	Sag Ft	Tension Lb	RTS %	Sag Ft	Tension Lb	RTS %	Description
0	.50	4.00	.30	3.451	60.21	16259	38.5	57.54	17000*	40.3	NESC Heavy
60	0	25.6	.00	3.675	64.84	16100	38.2	61.98	16829	39.9	High Wind
0	1	2.00	.00	4.942	63.42	22124	52.4	63.01	22265	52.8	Hvy ice/wind
0	.25	2.00	.00	2.361	57.55	11630	27.6	53.15	12578	29.8	Broken wire
0	0	2.00	.00	1.809	56.07	9143	21.7	50.68	10104	23.9	Stringing
32	.5	0.00	.00	3.038	61.54	14010	33.2	58	14851	35.2	32°/ 0.5" ice
-20	.00	0.00	.00	1.792	54.41	9328	22.1	49.05	10333	24.5	-20° F
0	.00	0.00	.00	1.792	56.02	9063	21.5	50.59	10022	23.7	0° F
30	.00	0.00	.00	1.792	58.39	8702	20.6	52.87	9597	22.7	30°F
60	.00	0.00	.00	1.792	60.68	8379	19.9	55.09	9214	21.8	60°F
120	.00	0.00	.00	1.792	65.07	7823	18.5	59.4	8556	20.3	120°F
167	.00	.00	.00	1.792	68.35	7456	17.7	62.64	8121	19.2	167°F
212	.00	.00	.00	1.792	71.37	7147	16.9	65.63	7758	18.4	**212°F MOT**

* Design Condition
** Sag data generated using Alcoa Sag and Tension Software Sag10

MOT=Maximum Operating Temperature	Engineering Report	Date	Northwestern Energy Tower Loading
	Compiled: Dan Zacharda	10/23/06	1500 ft Ruling Span
	Checked: Darel Tracy		1590 kcmil ACSR "Lapwing"

Appendix C
Alternative Conductor Types

CABLE CORPORATION

UTILITY
OVERHEAD CONDUCTORS
Product Specification Sheet

ACCC cable

Trapezoidal Concentric-Lay-Stranded Conductor

1572 kcmil / Bittern (797 mm^2)

Governing Standard	**ASTM or CSA**	**ASTM**	
Aluminum Cross-Sectional Area	1572. kcmil	(796.4 mm²)	
Calculated Cable OD	1.345 in	(34.17 mm)	
Diameter of Composite in Core Strand	0.3450 in	(8.76 mm)	
Number of Strand(s) in Core	1		
Number of Aluminum Wire Layers	3		
Number of Strands in 1st Layer	8		
Number of Strands in 2nd Layer	13		
Number of Strands in 3rd Layer	18		

Total Cross Sectional Area of Conductor	1.3283	in.^{2} (857.0 mm^2)
Annular Aluminum Area	1690.3	kcmil
Fill Factor	93	%
Design Area Aluminum	1572.0	kcmil
Actual Aluminum Area	1572.2	kcmil
Number of Aluminum Strands	39	
Aluminum in 1st layer	20.19	%
Aluminum In 2nd layer	33.34	%
Aluminum in 3rd layer	46.49	%

	Composite Core
Conductivity of outer aluminum (%IACS)	63.0 %
Conductivity of inner core (%IACS)	.0 %
Frequency of Operation	60 Hz

ASTM B857 in general for overall conductor
ASTM B609 for 1350 O temper (annealed) aluminum
CTC composite Fibreglass / Carbon Fiber Core

Conductor Design:

Diameter of Steel Core	.3450 in	(8.76 mm)		
1st Layer - number of wires = 8				
Equiv. Round Wire Dia.	.1992 in	(5.06 mm)	Area per strand	39.66 kcmil
Diameter Over Layer	.6784 in	(17.23 mm)	Height "t"	0.1667 in
2nd Layer - number of wires = 13				
Equiv. Round Wire Dia.	.2008 in	(5.10 mm)	Area per strand	40.31 kcmil
Diameter Over Layer	1.0118 in	(25.70 mm)	Height "t"	0.1667 in
3rd Layer - number of wires = 18				
Equiv. Round Wire Dia.	.2015 in	(5.12 mm)	Area per strand	40.6 kcmil
Diameter Over Layer	1.3452 in	(34.17 mm)	Height "t"	0.1667 in

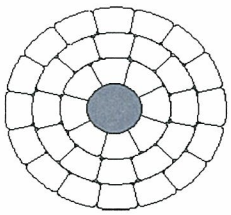

Mechanical Properties:

	Aluminum (1350)		**Composite Core**		**Total**	
Conductor Mass	1478 lb/kft	2201 kg/km	76 lb/kft	113 kg/km	1554 lb/kft	2314 kg/km
Conductor Area	1.2348 sq.in.	796.6 sq.mm	.0935 sq.in.	60.3 sq.mm	1.3283 sq.in.	857.0 sq.mm
Rated Strength	10080 lb	44.8 kN	29260 lb	130.1 kN	39300 lb *	175.0 kN
Modules	10 Msi	69 Gpa	17.2 Msi	117 Gpa		
Thermal Expansion (CTE)	12.8 x 10^{-6}/F	23 x 10^{-6}/C	0.89 x 10^{-6}/F	1.61 x 10^{-6}/C		
Thermal Heat Capacity	355.7 W.s/ft per F	640.3 ... per C				
Tensile Strength Basis	8500 psi					
Strength Derating Factor	0.96					

* value rounded to nearest 100lb unit

Electrical Properties: @ 60 Hz (For detailed ampacity information, please see second page)

Temperature	**DC Resistance**		**AC Resistance**		**AC Resistance**		**AC Resistance**	
20 C	0.010718	ohm/kft	0.01142	ohm/kft	0.0603	ohm/mile	0.0375	ohm/km
	(0.035166	ohm/km)						
25 C	0.010941	ohm/kft	0.01163	ohm/kft	0.0614	ohm/mile	0.0382	ohm/km
50 C	0.012056	ohm/kft	0.01269	ohm/kft	0.0670	ohm/mile	0.0416	ohm/km
75 C	0.013170	ohm/kft	0.01375	ohm/kft	0.0726	ohm/mile	0.0451	ohm/km
100 C	0.014285	ohm/kft	0.01482	ohm/kft	0.0783	ohm/mile	0.0486	ohm/km
125 C	0.015400	ohm/kft	0.01590	ohm/kft	0.0840	ohm/mile	0.0522	ohm/km
150 C	0.016514	ohm/kft	0.01698	ohm/kft	0.0897	ohm/mile	0.0557	ohm/km
175 C	0.017629	ohm/kft	0.01807	ohm/kft	0.0954	ohm/mile	0.0593	ohm/km
200 C	0.018744	ohm/kft	0.01916	ohm/kft	0.1012	ohm/mile	0.0629	ohm/km
GMR			0.0445	feet			1.36	cm
Inductive Reactance @ 1ft radius (0.3048m			0.0715	ohm/kft @60 Hz	0.3776	ohm/mile @60 Hz	0.2346	ohm/km @60 Hz
Capacitive Reactance @ 1ft radius (0.3048m			0.4513	megohm-kft @60 Hz	0.0855	megohm-mile	0.1376	megohm-km @60 Hz

Aluminum Stranding Factor = 1.0235

ACCC cable conductor stranded by:
General Cable

ACCC cable
Trapezoidal Concentric-Lay-Stranded Conductor

1572 kcmil / Bittern
(797 mm^2)

AMPACITY TABLE

CONDUCTOR : BITTERN (PARIS)
SIZE - 1572.0 KCMIL
STRANDING - 39 / 1
EMISSIVITY- .50

EQ ALUM STRAND DIA - .2008 IN
CTC CORE DIA - .3450 IN
OUTSIDE DIAMETER - 1.345 IN
ALUM CONDUCTIVITY - 63.0% IACS
CORE CONDUCTIVITY - .0% IACS

OPERATING CONDITIONS : AMBIENT TEMPERATURE - 25. DEG C
CROSSWIND VELOCITY - 2.00 FT/SEC

OPERATING TEMP C-DEG-F		R-DC (OHMS/ 1000 FT)	R-AC (OHMS/ 1000 FT)	AMPACITY WITHOUT SUN WITHOUT WIND	AMPACITY WITHOUT SUN WITH WIND	AMPACITY WITH SUN WITHOUT WIND	AMPACITY WITH SUN WITH WIND
20.	68.	.010718	.011421	0.	0.	0.	0.
25.	77.	.010941	.011631	0.	0.	0.	0.
40.	104.	.011610	.012264	588.	834.	0.	506.
50.	122.	.012056	.012687	785.	1062.	438.	839.
60.	140.	.012502	.013112	947.	1242.	697.	1065.
70.	158.	.012947	.013538	1087.	1393.	886.	1242.
75.	167.	.013170	.013752	1152.	1460.	967.	1320.
80.	176.	.013393	.013965	1213.	1524.	1043.	1392.
90.	194.	.013839	.014394	1328.	1640.	1179.	1522.
100.	212.	.014285	.014823	1434.	1746.	1302.	1639.
110.	230.	.014731	.015254	1533.	1842.	1414.	1744.
120.	248.	.015177	.015685	1626.	1932.	1517.	1841.
125.	257.	.015400	.015901	1671.	1974.	1567.	1886.
130.	266.	.015623	.016117	1715.	2016.	1614.	1931.
140.	284.	.016068	.016550	1799.	2094.	1706.	2015.
150.	302.	.016514	.016983	1879.	2169.	1793.	2095.
160.	320.	.016960	.017417	1957.	2240.	1876.	2170.
170.	338.	.017406	.017852	2031.	2308.	1956.	2241.
175.	347.	.017629	.018069	2068.	2341.	1995.	2277.
180.	356.	.017852	.018287	2104.	2374.	2033.	2311.
190.	374.	.018298	.018723	2174.	2438.	2107.	2378.
200.	392.	.018744	.019159	2243.	2499.	2179.	2442.

SUN CONDITIONS : AZIMUTH OF LINE - 270. DEG ALTITUDE OF SUN - 83. DEG
AZIMUTH OF SUN - 180. DEG SOLAR ABSORPTION - .5
TOTAL SOLAR AND SKY RADIATED HEAT - 96.0 WATTS/SQ FT

ALTITUDE : 0. FT ABOVE SEA LEVEL

FREQUENCY OF OPERATION = 60.0 HERTZ

The information contained herein is offered in good faith and believed to be accurate. However, although the information is mathematically derived, normal dimensional tolerances in actual cable construction may lead to differences between the indicated values and actual measured values. CTC Cable's sole warranty is that the product will meet the sales specifications in effect at the time of shipment within acceptable tolerances customary in the industry. Your exclusive remedy for breach of such warranty is limited to refund of purchase price or replacement of any product shown to be other than as warranted. CTC Cable specifically disclaims any other express or implied warranty of fitness for a particular purpose or merchantability. CTC Cable disclaims liability for any incidental or consequential damages.
CTC Cable reserves the right to make changes to its products, or to discontinue any product or service without notice and advises its customers to obtain the latest version of relevant information to verify, before placing orders, that the information being relied upon is current.
Copyright © 2004 CTC Cable Corporation. All rights reserved.

CTC CABLE CORPORATION

INNOVATIVE SOLUTIONS FOR THE POWER INDUSTRY
www.compositetechcorp.com

CTC CABLE CORPORATION

UTILITY
OVERHEAD CONDUCTORS
Product Specification Sheet

ACCC cable

Trapezoidal Concentric-Lay-Stranded Conductor

1966 kcmil / Lapwing ($996mm^2$)

Governing Standard ASTM or CSA	**ASTM**	
Aluminum Cross-Sectional Area	1966. kcmil	(995.9 mm²)
Calculated Cable OD	1.504 in	(38.20 mm)
Diameter of Composite in Core Strand	0.3850 in	(9.78 mm)
Number of Strand(s) in Core	1	
Number of Aluminum Wire Layers	4	
Number of Strands in 1st Layer	8	
Number of Strands in 2nd Layer	12	
Number of Strands in 3rd Layer	16	
Number of Strands in 4th Layer	20	

Total Cross Sectional Area of Conductor	1.6608	in.^{2} (1071.5 mm^2)
Annular Aluminum Area	2114.0	kcmil
Fill Factor	93	%
Design Area Aluminum	1966.0	kcmil
Actual Aluminum Area	1966.4	kcmil
Number of Aluminum Strands	56	
Aluminum in 1st layer	13.89	%
Alminum in 2nd layer	21.30	%
Alminum in 3rd layer	28.71	%
Aluminum in 4th layer	36.11	%

	Composite Core
Conductivity of outer aluminum (%IACS)	63.0 %
Conductivity of inner core (%IACS)	.0 %
Frequency of Operation	60 Hz

ASTM B857 in general for overall conductor
ASTM B609 for 1350 O temper (annealed) aluminum
CTC composite Fiberglass / Carbon Fiber Core

Conductor Design:

Diameter of CTC Composite Core	.3850 in	(9.78 mm)		
1st Layer - number of wires = 8				
Equiv. Round Wire Dia.	.1848 in	(4.69 mm)	Area per strand	34.15 kcmil
Diameter Over Layer	.6648 in	(16.89 mm)	Height "t"	0.1399 in
2nd Layer - number of wires = 12				
Equiv. Round Wire Dia.	.1868 in	(4.75 mm)	Area per strand	34.9 kcmil
Diameter Over Layer	.9446 in	(23.99 mm)	Height "t"	0.1399 in
3rd Layer - number of wires = 16				
Equiv. Round Wire Dia.	.1878 in	(4.77 mm)	Area per strand	35.28 kcmil
Diameter Over Layer	1.2244 in	(31.10 mm)	Height "t"	0.1399 in
4th Layer - number of wires = 20				
Equiv. Round Wire Dia.	.1884 in	(4.79 mm)	Area per strand	35.5 kcmil
Diameter Over Layer	1.5042 in	(38.21 mm)	Height "t"	0.1399 in

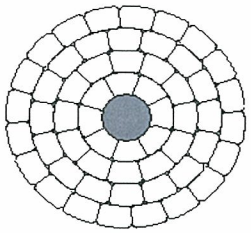

Mechanical Properties:

	Aluminum (1350)		**Composite Core**		**Total**	
Conductor Mass	1864 lb/kft	2775 kg/km	96 lb/kft	142 kg/km	1960 lb/kft	2918 kg/km
Conductor Area	1.5444 in^2	996.4 mm^2	0.1164 in^2	75.1 mm^2	1.6608 in^2	1071.5 mm^2
Rated Strength	12600 lb	56.0 kN	36440 lb	162.1 kN	49000 lb *	218.1 kN
Modules	10 Msi	69 Gpa	17.2 Msi	117 Gpa	* value rounded to nearest 100lb unit	
Thermal Expansion (CTE)	12.8 x 10^{-6}/F	23 x 10^{-6}/C	0.89 x 10^{-6}/F	1.61 x 10^{-6}/C		
Thermal Heat Capacity	448.6 W.s/ft per F	807.4 ... per C				
Tensile Strength Basis	8500 psi					
Strength Derating Factor	0.96					

Electrical Properties: @ 60 Hz (For detailed ampacity information, see second page)

Temperature	**DC Resistance**		**AC Resistance**		**AC Resistance**		**AC Resistance**	
20 C	0.008641	ohm/kft	0.00949	ohm/kft	0.0501	ohm/mile	0.0311	ohm/km
	(0.028352	ohm/km)						
25 C	0.008821	ohm/kft	0.00966	ohm/kft	0.0510	ohm/mile	0.0317	ohm/km
50 C	0.009720	ohm/kft	0.01049	ohm/kft	0.0554	ohm/mile	0.0344	ohm/km
75 C	0.010618	ohm/kft	0.01133	ohm/kft	0.0598	ohm/mile	0.0372	ohm/km
100 C	0.011517	ohm/kft	0.01218	ohm/kft	0.0643	ohm/mile	0.0400	ohm/km
125 C	0.012416	ohm/kft	0.01303	ohm/kft	0.0688	ohm/mile	0.0428	ohm/km
150 C	0.013314	ohm/kft	0.01389	ohm/kft	0.0733	ohm/mile	0.0456	ohm/km
175 C	0.014213	ohm/kft	0.01475	ohm/kft	0.0779	ohm/mile	0.0484	ohm/km
200 C	0.015112	ohm/kft	0.01562	ohm/kft	0.0825	ohm/mile	0.0513	ohm/km
GMR			0.0499	feet			1.52	cm
Inductive Reactance @ 1ft radius (0.3048m)			0.0689	ohm/kft @60 Hz	0.3638	ohm/mile @60 Hz	0.2260	ohm/km @60 Hz
Capacitive Reactance @ 1ft radius (0.3048m)			0.4338	megohm-kft @60 Hz	0.0822	megohm-mile	0.1322	megohm-km @60 Hz

Aluminum Stranding Factor = 1.032

ACCC cable conductor stranded by:
General Cable

F-730-013

AMPACITY TABLE

CONDUCTOR : LAPWING (MADRID)
SIZE - 1966.0 KCMIL
STRANDING - 56 / 1
EMISSIVITY- .50

EQ ALUM STRAND DIA - .1874 IN
CORE STRAND DIA - .3850 IN
OUTSIDE DIAMETER - 1.504 IN
ALUM CONDUCTIVITY - 63.0% IACS
CORE CONDUCTIVITY - .0% IACS

OPERATING CONDITIONS : AMBIENT TEMPERATURE - 25. DEG C
CROSSWIND VELOCITY - 2.00 FT/SEC

OPERATING TEMP C-DEG-F	R-DC (OHMS/ 1000 FT)	R-AC (OHMS/ 1000 FT)	AMPACITY WITHOUT SUN WITHOUT WIND	AMPACITY WITHOUT SUN WITH WIND	AMPACITY WITH SUN WITHOUT WIND	AMPACITY WITH SUN WITH WIND
20. 68.	.008641	.009494	0.	0.	0.	0.
25. 77.	.008821	.009659	0.	0.	0.	0.
40. 104.	.009360	.010155	678.	948.	0.	553.
50. 122.	.009720	.010489	904.	1209.	494.	942.
60. 140.	.010079	.010824	1092.	1415.	798.	1203.
70. 158.	.010439	.011160	1255.	1588.	1018.	1408.
75. 167.	.010618	.011329	1330.	1665.	1113.	1498.
80. 176.	.010798	.011498	1401.	1739.	1200.	1582.
90. 194.	.011158	.011836	1535.	1873.	1359.	1732.
100. 212.	.011517	.012176	1658.	1995.	1502.	1867.
110. 230.	.011877	.012517	1774.	2107.	1633.	1989.
120. 248.	.012236	.012859	1883.	2211.	1754.	2103.
125. 257.	.012416	.013031	1935.	2260.	1812.	2155.
130. 266.	.012595	.013202	1986.	2308.	1867.	2207.
140. 284.	.012955	.013546	2084.	2400.	1975.	2305.
150. 302.	.013314	.013891	2178.	2487.	2077.	2398.
160. 320.	.013674	.014236	2269.	2570.	2174.	2486.
170. 338.	.014033	.014582	2357.	2649.	2267.	2570.
175. 347.	.014213	.014755	2399.	2689.	2313.	2612.
180. 356.	.014393	.014928	2442.	2727.	2358.	2652.
190. 374.	.014752	.015275	2524.	2801.	2445.	2730.
200. 392.	.015112	.015623	2605.	2874.	2530.	2806.

SUN CONDITIONS : AZIMUTH OF LINE - 270. DEG ALTITUDE OF SUN - 83. DEG
AZIMUTH OF SUN - 180. DEG SOLAR ABSORPTION - .5
TOTAL SOLAR AND SKY RADIATED HEAT - 96.0 WATTS/SQ FT

ALTITUDE : 0. FT ABOVE SEA LEVEL

FREQUENCY OF OPERATION = 60.0 HERTZ

The information contained herein is offered in good faith and believed to be accurate. However, although the information is mathematically derived, normal dimensional tolerances in actual cable construction may lead to differences between the indicated values and actual measured values. CTC Cable's sole warranty is that the product will meet the sales specifications in effect at the time of shipment within acceptable tolerances customary in the industry. Your exclusive remedy for breach of such warranty is limited to refund of purchase price or replacement of any product shown to be other than as warranted. CTC Cable specifically disclaims any other express or implied warranty of fitness for a particular purpose or merchantability. CTC Cable disclaims liability for any incidental or consequential damages.
CTC Cable reserves the right to make changes to its products, or to discontinue any product or service without notice and advises its customers to obtain the latest version of relevant information to verify, before placing orders, that the information being relied upon is current.
Copyright © 2004 CTC Cable Corporation. All rights reserved.

ACSS

Aluminum Conductor, Steel Supported.

APPLICATIONS

ACSS is used for overhead distribution and transmission lines. It is designed to operate continuously at elevated temperatures up to 250°C without loss of strength; it sags less under emergency electrical loadings than ACSR; it is self-damping if prestretched during installation; and its final sags are not affected by long term creep of aluminum. The advantages make ACSS especially useful in reconductoring applications requiring increased current with existing tensions and clearances, new line applications where structures can be economized because of reduced conductor sag, new line applications requiring high emergency loadings, and lines where aeolian vibration is a problem.

SPECIFICATIONS

Southwire's ACSS conductor meets or exceeds the following ASTM specifications:

- B341 Aluminum-Coated Steel Core Wire for Aluminum Conductors, Steel Reinforced.
- B500 Metallic Coated Stranded Steel Core For Aluminum Conductors, Steel Reinforced.
- B609 Aluminum 1350 Round Wire, Annealed and Intermediate Tempers, for Electrical Purposes.
- B802 Zinc-5% Aluminum-Mischmetal Alloy-Coated Steel Core Wire for Aluminum Conductors, Steel Reinforced.
- B803 High-Strength Zinc-5% Aluminum-Mischmetal Alloy-Coated Steel Core Wire for Aluminum and Aluminum-Alloy Conductors, Steel Reinforced.
- B856 Concentric-Lay-Stranded Aluminum Conductors, Coated Steel Supported (ACSS).

The strandings available are identical to those listed in ASTM specification B232.

CONSTRUCTION

ACSS is a composite concentric-lay stranded conductor. Steel strands form the central core of the conductor with one or more layers of aluminum 1350-0 wire stranded around it. The steel core carries most or all of the mechanical load of the conductor due to the "0" (fully annealed or soft) temper aluminum. Steel core wires are protected from corrosion by galvanizing, aluminizing, or mischmetal alloy coating. Corrosion protection should be selected to suit the environment to which the conductor will be exposed. High strength steel core is also available.

Southwire
One Southwire Drive
Carrollton, Ga. 30119 USA

MADE IN ★ THE USA

Copyright 2003, Southwire Company.
All Rights Reserved.

®Southwire is a registered trademark of Southwire Company.

ACSS

Code Word	Size (kcmil)	Stranding (Al/St)	Diameter (ins.)				Weight Per 1000 ft. (lbs)			Rated Strength		Resistance OHMS/1000 ft.		Ampacity at 200°C (AMPS)
			Individual Wires		Steel Core	Complete Cable						DC @ 20°C	AC @ 75°C	
			Al	Steel			Al	Steel	Total	Standard Strength lbs.	High Strength lbs.			
Partridge/ACSS	266.8	26/7	0.1013	0.0788	0.2363	0.642	251.3	115.5	366.8	8880	9730	.0619	.0761	812
Junco/ACSS	266.8	30/7	0.0943	0.0943	0.2829	0.660	251.9	165.5	417.4	11700	13000	.0615	.0756	822
Ostrich/ACSS	300.0	26/7	0.1074	0.0835	0.2506	0.680	282.5	129.9	412.4	10000	10900	.0551	.0677	877
Linnet/ACSS	336.4	26/7	0.1137	0.0885	0.2654	0.720	316.8	145.7	462.5	11200	12300	.0491	.0604	945
Oriole/ACSS	336.4	30/7	0.1059	0.1059	0.3177	0.741	317.6	208.7	526.3	14800	16300	.0488	.0600	957
Brant/ACSS	397.5	24/7	0.1287	0.0858	0.2574	0.772	374.4	137.0	511.4	11000	12100	.0417	.0514	1047
Ibis/ACSS	397.5	26/7	0.1236	0.0962	0.2885	0.783	374.4	172.1	546.5	13000	14200	.0416	.0512	1054
Lark/ACSS	397.5	30/7	0.1151	0.1151	0.3453	0.806	375.3	246.5	621.9	17500	19300	.0413	.0508	1068
Flicker/ACSS	477	24/7	0.1410	0.0940	0.2819	0.846	449.2	164.4	613.6	13000	14200	.0348	.0429	1180
Hawk/ACSS	477	26/7	0.1354	0.1053	0.3160	0.858	449.2	206.5	655.8	15600	17100	.0346	.0427	1188
Hen/ACSS	477	30/7	0.1261	0.1261	0.3783	0.883	450.3	295.9	746.3	21000	22700	.0344	.0424	1204
Parakeet/ACSS	556.5	24/7	0.1523	0.1015	0.3045	0.914	524.1	191.8	715.9	15200	16600	.0298	.0368	1306
Dove/ACSS	556.5	26/7	0.1463	0.1138	0.3413	0.927	524.2	240.9	765.1	18200	19900	.0297	.0366	1315
Eagle/ACSS	556.5	30/7	0.1362	0.1362	0.4086	0.953	525.4	345.2	870.6	24500	26500	.0295	.0363	1331
Peacock/ACSS	605	24/7	0.1588	0.1058	0.3175	0.953	569.8	208.5	778.3	16500	18100	.0274	.0339	1379
Squab/ACSS	605	26/7	0.1525	0.1186	0.3559	0.966	569.8	261.9	831.8	19700	21300	.0273	.0337	1389
Wood Duck/ACSS	605	30/7	0.1420	0.1420	0.4260	0.994	571.1	375.3	946.5	26000	28300	.0271	.0334	1407
Teal/ACSS	605	30/19	0.1420	0.0852	0.4260	0.994	571.1	367.4	938.6	26600	29300	.0272	.0335	1406
Rook/ACSS	636	24/7	0.1628	0.1085	0.3256	0.977	599.0	219.2	818.2	17300	19000	.0261	.0322	1425
Grosbeak/ACSS	636	26/7	0.1564	0.1216	0.3649	0.991	599.0	275.4	874.4	20700	22400	.0260	.0321	1435
Scoter/ACSS	636	30/7	0.1456	0.1456	0.4368	1.019	600.5	394.5	995.0	27400	29700	.0258	.0318	1454
Egret/ACSS	636	30/19	0.1456	0.0874	0.4368	1.019	600.5	386.3	986.8	28000	30900	.0258	.0319	1453
Flamingo/ACSS	666.6	24/7	0.1667	0.1111	0.3333	1.000	627.8	229.7	857.6	18200	19900	.0249	.0308	1470
Gannet/ACSS	666.6	26/7	0.1601	0.1245	0.3736	1.014	627.8	288.6	916.4	21700	23400	.0248	.0306	1480
Stilt/ACSS	715.5	24/7	0.1727	0.1151	0.3453	1.036	673.9	246.5	920.5	19500	21300	.0232	.0287	1540
Starling/ACSS	715.5	26/7	0.1659	0.1290	0.3871	1.051	673.8	309.8	983.7	23300	25200	.0231	.0286	1550
Redwing/ACSS	715.5	30/19	0.1544	0.0927	0.4633	1.081	675.5	434.6	1110.1	30800	34000	.0230	.0284	1570
Cuckoo/ACSS	795	24/7	0.1820	0.1213	0.3640	1.092	748.8	274.0	1022.7	21700	23300	.0209	.0259	1650
Drake/ACSS	795	26/7	0.1749	0.1360	0.4080	1.107	748.8	344.2	1093.0	25900	28000	.0209	.0257	1662
Macaw/ACSS	795	42/7	0.1376	0.0764	0.2293	1.055	748.8	108.7	857.5	11800	12600	.0211	.0262	1621
Tern/ACSS	795	45/7	0.1329	0.0886	0.2658	1.063	748.7	146.1	894.9	14200	15200	.0210	.0263	1618
Condor/ACSS	795	54/7	0.1213	0.1213	0.3640	1.092	748.7	274.0	1022.7	21700	23300	.0209	.0266	1618
Mallard/ACSS	795	30/19	0.1628	0.0977	0.4884	1.139	750.5	482.8	1233.4	34300	37900	.0207	.0255	1683
Ruddy/ACSS	900	45/7	0.1414	0.0943	0.2828	1.131	847.7	165.4	1013.1	15800	17000	.0186	.0233	1755
Canary/ACSS	900	54/7	0.1291	0.1291	0.3873	1.162	847.5	310.1	1157.8	24600	26400	.0184	.0236	1756

Southwire
One Southwire Drive
Carrollton, Ga. 30119 USA

MADE IN ★ THE USA

Copyright 2003, Southwire Company.
All Rights Reserved.

*Southwire is a registered trademark of Southwire Company.

ACSS

Code Word	Size (kcmil)	Stranding (Al/St)	Diameter (ins.)				Weight Per 1000 ft. (lbs)			Rated Strength		Resistance OHMS/1000 ft.		Ampacity at 200°C (AMPS)
			Individual Wires		Steel Core	Complete Cable						DC @ 20°C	AC @ 75°C	
			Al	Steel			Al	Steel	Total	Standard Strength lbs.	High Strength lbs.			
Redbird/ACSS	954	24/7	0.1994	0.1329	0.3987	1.196	898.5	328.7	1227.3	26000	28000	.0174	.0217	1859
Rail/ACSS	954	45/7	0.1456	0.0971	0.2912	1.165	898.5	175.3	1073.9	16700	18000	.0175	.0220	1824
Towhee/ACSS	954	48/7	0.1410	0.1097	0.3290	1.175	898.5	223.7	1122.3	19700	21300	.0175	.0218	1842
Cardinal/ACSS	954	54/7	0.1329	0.1329	0.3987	1.196	898.5	328.7	1227.3	26000	28000	.0174	.0223	1825
Canvasback/ACSS	954	30/19	0.1783	0.1070	0.5350	1.248	900.7	579.4	1480.1	41100	45400	.0172	.0214	1897
Snowbird/ACSS	1033.5	42/7	0.1569	0.0871	0.2614	1.203	973.3	141.3	1114.7	15400	16500	.0162	.0204	1924
Ortolan/ACSS	1033.5	45/7	0.1515	0.1010	0.3031	1.212	973.3	190.0	1163.4	18100	19500	.0162	.0204	1921
Curlew/ACSS	1033.5	54/7	0.1383	0.1383	0.4150	1.245	973.4	356.2	1329.6	28200	30300	.0161	.0206	1924
Bluejay/ACSS	1113	45/7	0.1573	0.1048	0.3145	1.258	1048.2	204.5	1252.8	19500	21100	.0150	.0190	2017
Finch/ACSS	1113	54/19	0.1436	0.0861	0.4307	1.292	1053.3	375.5	1428.9	30400	33200	.0150	.0193	2015
Bunting/ACSS	1192.5	45/7	0.1628	0.1085	0.3256	1.302	1123.1	219.2	1342.4	21400	23500	.0140	.0178	2110
Bittern/ACSS	1272	45/7	0.1681	0.1121	0.3362	1.345	1197.9	233.8	1431.9	22300	24000	.0131	.0167	2200
Pheasant/ACSS	1272	54/19	0.1535	0.0921	0.4604	1.381	1203.8	429.2	1633.0	34100	37300	.0131	.0169	2200
Dipper/ACSS	1351	45/7	0.1733	0.1155	0.3465	1.386	1272.3	248.3	1520.8	23700	25500	.0124	.0158	2289
Martin/ACSS	1351	54/19	0.1582	0.0949	0.4745	1.424	1278.7	455.8	1734.5	36200	39600	.0123	.0160	2288
Bobolink/ACSS	1431	45/7	0.1783	0.1189	0.3566	1.427	1347.7	263.0	1610.8	25100	27000	.0117	.0150	2375
Plover/ACSS	1431	54/19	0.1628	0.0977	0.4884	1.465	1354.2	482.8	1837.2	38400	41900	.0117	.0151	2375
Nuthatch/ACSS	1510	45/7	0.1832	0.1221	0.3664	1.465	1422.2	277.5	1699.8	26500	28100	.0111	.0143	2459
Parrot/ACSS	1510	54/19	0.1672	0.1003	0.5017	1.505	1429.2	509.5	1938.6	40400	44200	.0110	.0144	2460
Ratite/ACSS	1590	42/7	0.1946	0.1081	0.3243	1.492	1497.5	217.4	1715.0	23400	25000	.0105	.0136	2543
Lapwing/ACSS	1590	45/7	0.1880	0.1253	0.3759	1.504	1497.6	292.2	1789.8	27900	29600	.0105	.0136	2543
Falcon/ACSS	1590	54/19	0.1716	0.1030	0.5148	1.544	1504.8	536.5	2041.4	42600	46600	.0105	.0137	2545
Chukar/ACSS	1780	84/19	0.1456	0.0873	0.4367	1.601	1684.5	386.1	2070.8	35400	38200	.0094	.0122	2751
Mockingbird/ACSS	2034.5	72/7	0.1681	0.1121	0.3362	1.681	1925.4	233.7	2159.3	27200	28900	.0083	.0110	2960
Roadrunner/ACSS	2057	76/19	0.1645	0.0768	0.3839	1.700	1946.8	298.3	2245.2	31700	33900	.0082	.0108	2992
Bluebird/ACSS	2156	84/19	0.1602	0.0961	0.4806	1.140	2040.4	467.6	2508.2	42100	45500	.0078	.0103	3106
Kiwi/ACSS	2167	72/7	0.1735	0.1157	0.3470	1.735	2050.8	248.9	2299.9	29000	30800	.0078	.0104	3080
Thrasher/ACSS	2312	76/19	0.1744	0.0814	0.4070	1.802	2188.1	335.3	2523.5	35600	38100	.0073	.0098	3218
Joree/ACSS	2515	76/19	0.1819	0.0849	0.4245	1.880	2380.3	364.7	2745.1	38700	41400	.0067	.0092	3390

Notes:
(1) Data based on a nominal cable manufactured in accordance with proposed ASTM Standard.
(2) Resistance and ampacity based on an aluminum conductivity of 63%, IACS at 20°C, and a steel conductivity of 8% IACS at 20°C.
(3) Ampacity based on a 200°C conductor temperature, 25°C ambient temperature, 2 ft/sec. wind, in sun, with emissivity of .5 and a coefficient of solar absorption of .5, at sea level.
(4) Rated strengths based on Class A galvanized steel core wire in accordance with ASTM B 498.

Southwire
One Southwire Drive
Carrollton, Ga. 30119 USA

MADE IN ★ THE USA

Copyright 2003, Southwire Company.
All Rights Reserved.

®Southwire is a registered trademark of Southwire Company.

Appendix D
Load Flow Studies

110860 - Townsend-Midpoint Transmission Line Load Flow Studies

POWER Engineers 11/1/2006

CONTENTS

Loss Summary		pg	2
800 MW Cases:			
500 kV - 4 x 795 ACSR Mallard	- Two Series Caps	pg	3
	- One Series Cap	pg	4
	- No Series Caps	pg	5
	- No Series Caps, Shunt Reactors	pg	6
500 kV - 3 x 954 ACSR Rail	- Two Series Caps	pg	7
	- One Series Cap	pg	8
	- No Series Caps	pg	9
	- No Series Caps, Shunt Reactor	pg	10
500 kV - 3 x 1272 ACSR Bittern	- Two Series Caps	pg	11
	- One Series Cap	pg	12
	- No Series Caps	pg	13
	- No Series Caps, Shunt Reactor	pg	14
500 kV - 3 x 1590 ACSR Bittern	- Two Series Caps	pg	15
	- One Series Cap	pg	16
	- No Series Caps	pg	17
	- No Series Caps, Shunt Reactor	pg	18
0 MW Case			
500 kV - 3 x 1590 ACSR Bittern	- No Series Caps	pg	19
1200 MW Case			
500 kV - 3 x 1590 ACSR Bittern	- One Series Caps	pg	20
1600 MW Case			
500 kV - 3 x 1590 ACSR Bittern	- Two Series Caps	pg	21
600 MW Cases			
345 kV - 2 x 1272 ACSR Bittern	- Two Series Caps	pg	22
	- One Series Cap	pg	23
400 MW Cases			
230 kV -2 x 1272 ACSR Bittern	- Two Series Caps	pg	24
230 kV - 3 x 1780 ACSR Chukar	- Two Series Caps	pg	25
Study Data			
Map		pg	26
ATP Line Constants Results		pg	27
Per Unit Line Constants Calculations		pg	29
PSSE Per Unit Line Constants Summary		pg	36

110860 - Townsend-Midpoint Transmission Line Load Flow Studies

POWER Engineers 11/1/2006

PSSE Line Loss Summary

500 kV	Two Series Capacitors			One Series Capacitor			No Series Capacitors		
	From MW	To MW	Losses	From MW	To MW	Losses	From MW	To MW	Losses
4 x 795 ACSR Mallard	816.0	796.4	19.6	816.2	796.8	19.4	815.6	796.3	19.3
3 x 954 ACSR Rail	815.8	793.5	22.3	815.7	793.6	22.1	815.5	793.4	22.1
3 x 1272 ACSR Bittern	816.2	799	17.2	815.6	798.6	17.0	816.3	799.2	17.1
3 x 1590 ACSR Falcon	—	—	—	—	—	—	2.4	1.5	0.9
3 x 1590 ACSR Falcon	816.3	802.2	14.1	815.9	801.8	14.1	815.6	801.6	14.0
3 x 1590 ACSR Falcon	—	—	—	1248.3	1212	36.3	—	—	—
3 x 1590 ACSR Falcon	1648.4	1582.7	65.7	—	—	—	—	—	—

345 kV	Two Series Capacitors			One Series Capacitor		
	From MW	To MW	Losses	From MW	To MW	Losses
2 x 1272 ACSR Bittern	624.8	586.5	38.3	624.1	583.3	40.8

230 kV	Two Series Capacitors		
	From MW	To MW	Losses
2 x 1272 ACSR Bittern	430.8	379.4	51.4
3 x 1780 ACSR Chukar	431	408.7	22.3

Townsend-Midpoint 500 kV 4 x 795 Mallard

Bus - VOLTAGE (KV/PU)/ANGLE
Branch - MW/MVAR
Equipment - MW/MVAR

WECC 2008 HS2-S BASE CASE–MODIFIED 10-24-06 JTL
2012HS–MTNW 1730, MTID 296, MTSE -386, CS 2271
TUE, OCT 24 2006 21:01

Diagram created using
R:\03 2006 Projects\110860 SRPO Townsend-Midpoint\SR\PSSE Models\500 kV\oshsbs1_os816_500_mck30.sav
R:\03 2006 Projects\110860 SRPO Townsend-Midpoint\SR\PSSE Models\500 kV\Town-Mid 500 kV.sld

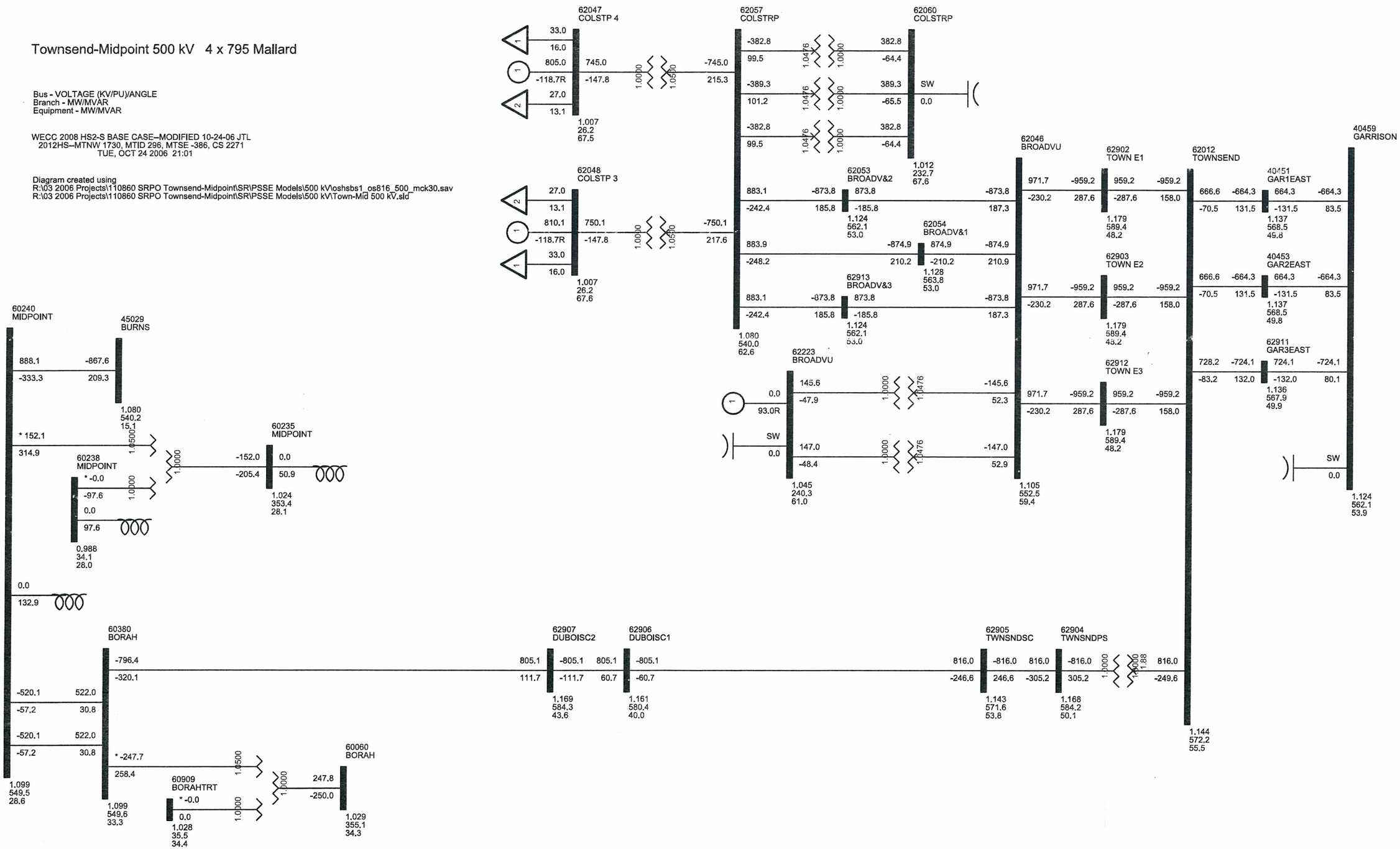

Townsend-Midpoint 500 kV 4 x 795 Mallard

Bus - VOLTAGE (KV/PU)/ANGLE
Branch - MW/MVAR
Equipment - MW/MVAR

WECC 2008 HS2-S BASE CASE–MODIFIED 10-24-06 JTL
2012HS–MTNW 1730, MTID 296, MTSE -386, CS 2271
TUE, OCT 24 2006 21:14

Diagram created using
R:\03 2006 Projects\110860 SRPO Townsend-Midpoint\SR\PSSE Models\500 kV\oshsbs1_os816_500_mck30.sav
R:\03 2006 Projects\110860 SRPO Townsend-Midpoint\SR\PSSE Models\500 kV\Town-Mid 500 kV.sld

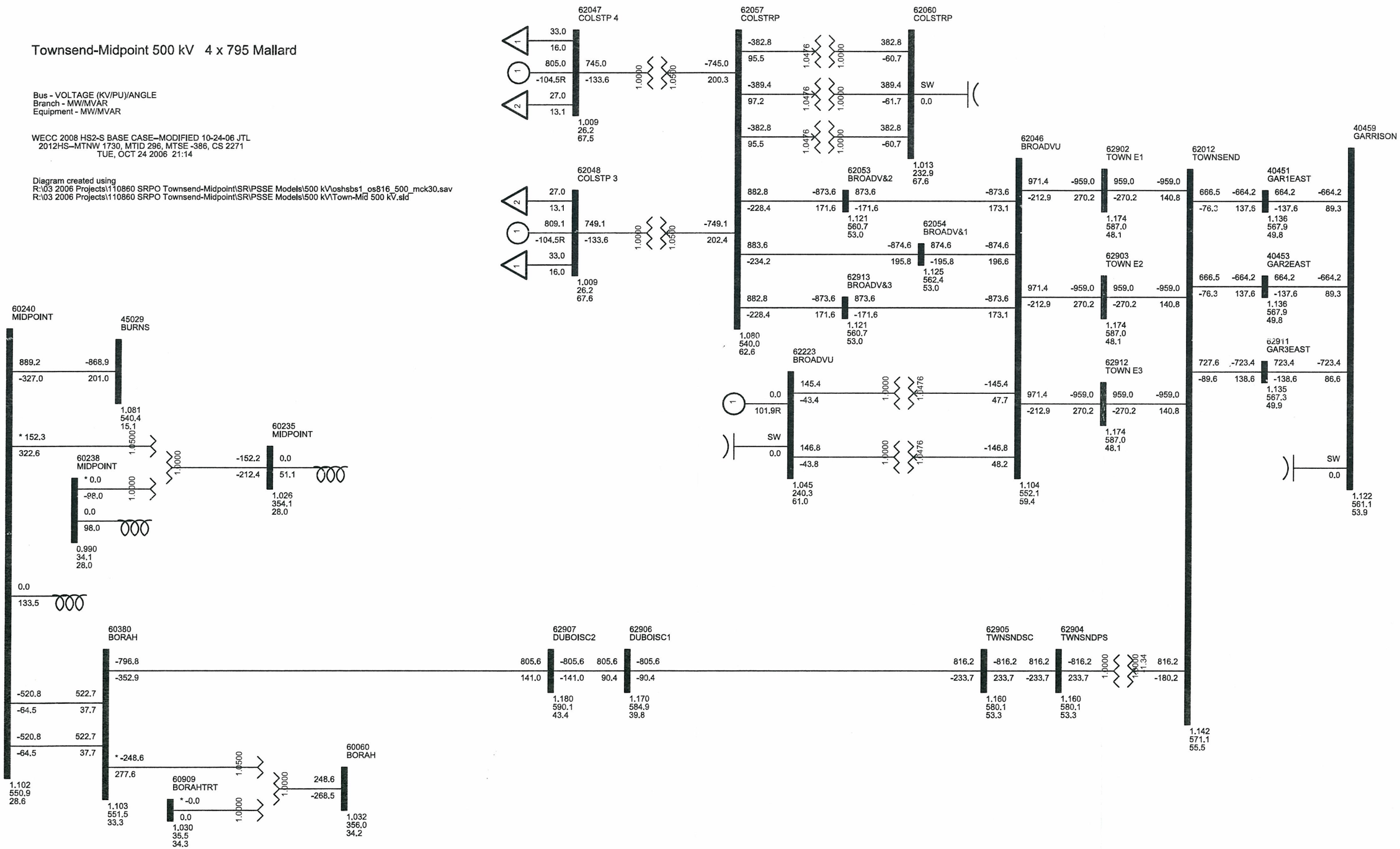

Townsend-Midpoint 500 kV 4 x 795 Mallard

Bus - VOLTAGE (KV/PU)/ANGLE
Branch - MW/MVAR
Equipment - MW/MVAR

WECC 2008 HS2-S BASE CASE--MODIFIED 11-7-05 JLR
2012HS--MTNW 1730, MTID 296, MTSE -386, CS 2271
TUE, OCT 24 2006 21:46

Diagram created using
R:\03 2006 Projects\110860 SRPO Townsend-Midpoint\SR\PSSE Models\500 kV\oshsbs1_os816_500_mck30.sav
R:\03 2006 Projects\110860 SRPO Townsend-Midpoint\SR\PSSE Models\500 kV\Town-Mid 500 kV.sld

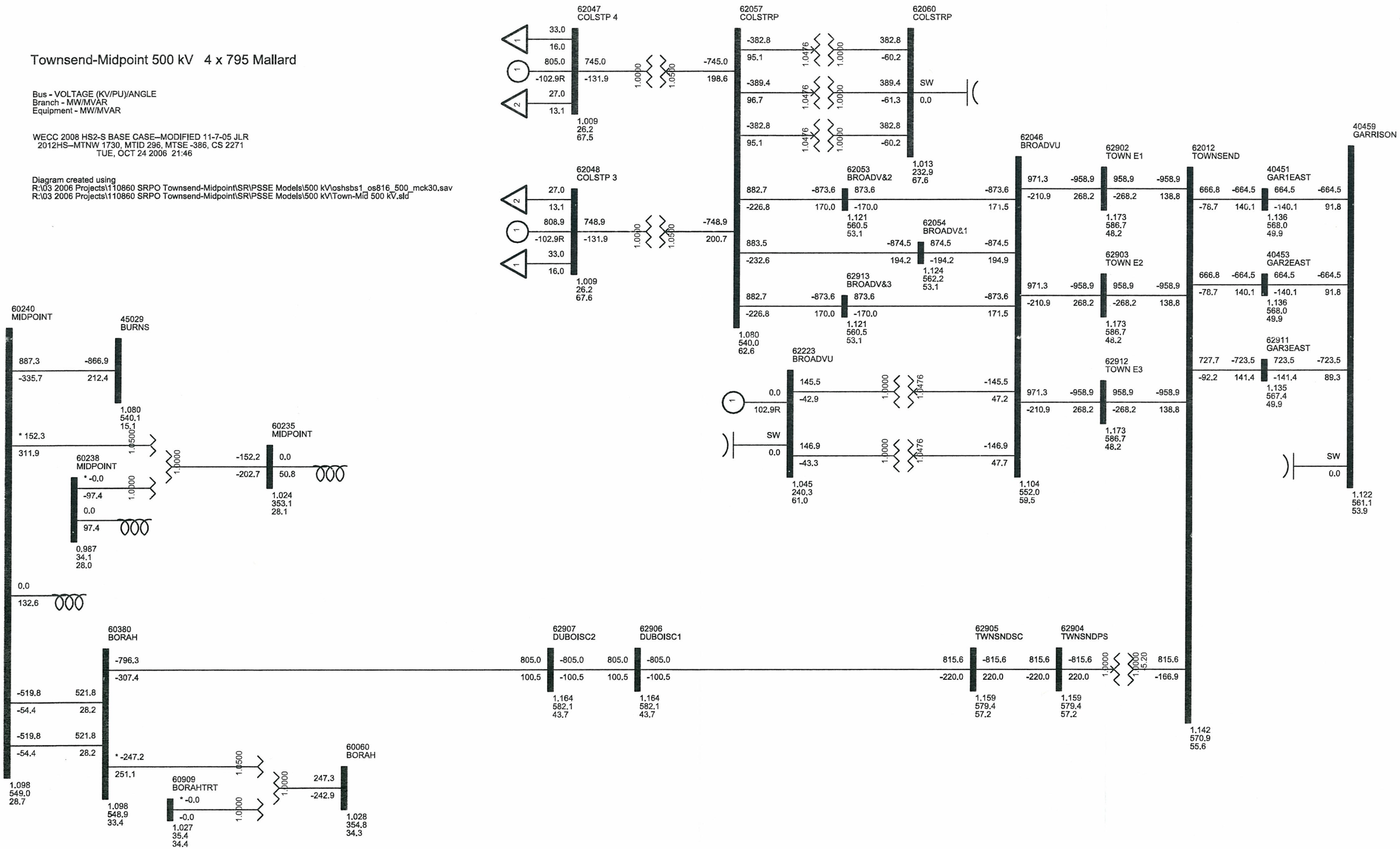

Townsend-Midpoint 500 kV 4 x 795 Mallard

Bus - VOLTAGE (KV/PU)/ANGLE
Branch - MW/MVAR
Equipment - MW/MVAR

WECC 2008 HS2-S BASE CASE--MODIFIED 10-25-06 JTL
2012HS--MTNW 1730, MTID 296, MTSE -386, CS 2271
WED, OCT 25 2006 9:46

Diagram created using
R:\03 2006 Projects\110860 SRPO Townsend-Midpoint\SR\PSSE Models\500 kV\oshsbs1_os816_500_mck30.sav
R:\03 2006 Projects\110860 SRPO Townsend-Midpoint\SR\PSSE Models\500 kV\Town-Mid 500 kV.sld

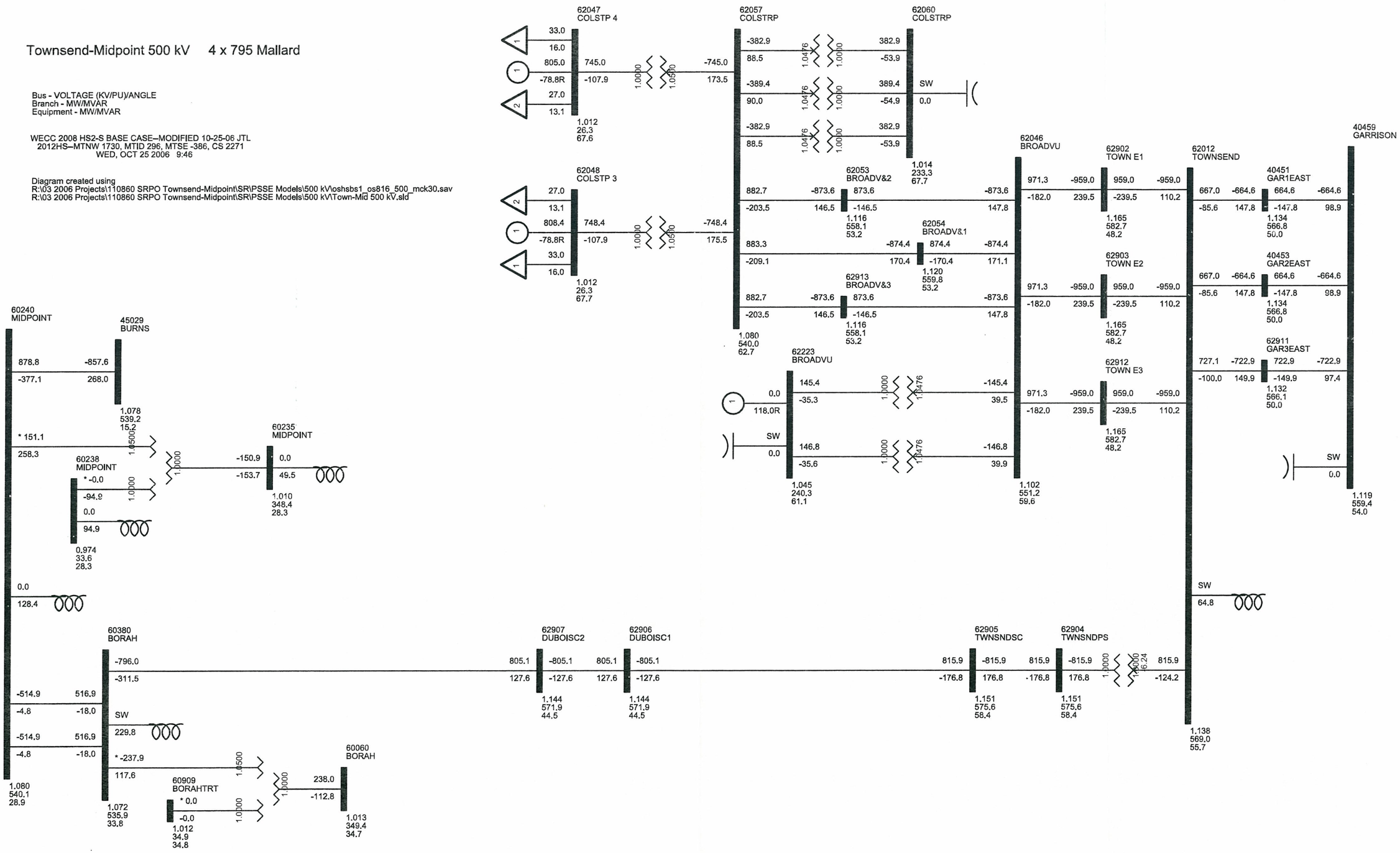

Townsend-Midpoint 500 kV 3 x 954 Rail

Bus - VOLTAGE (KV/PU)/ANGLE
Branch - MW/MVAR
Equipment - MW/MVAR

WECC 2008 HS2-S BASE CASE–MODIFIED 10-24-06 JTL
2012HS–MTNW 1730, MTID 296, MTSE -386, CS 2271
TUE, OCT 24 2006 21:03

Diagram created using
R:\03 2006 Projects\110860 SRPO Townsend-Midpoint\SR\PSSE Models\500 kV\oshsbs1_os816_500_mck30.sav
R:\03 2006 Projects\110860 SRPO Townsend-Midpoint\SR\PSSE Models\500 kV\Town-Mid 500 kV.sld

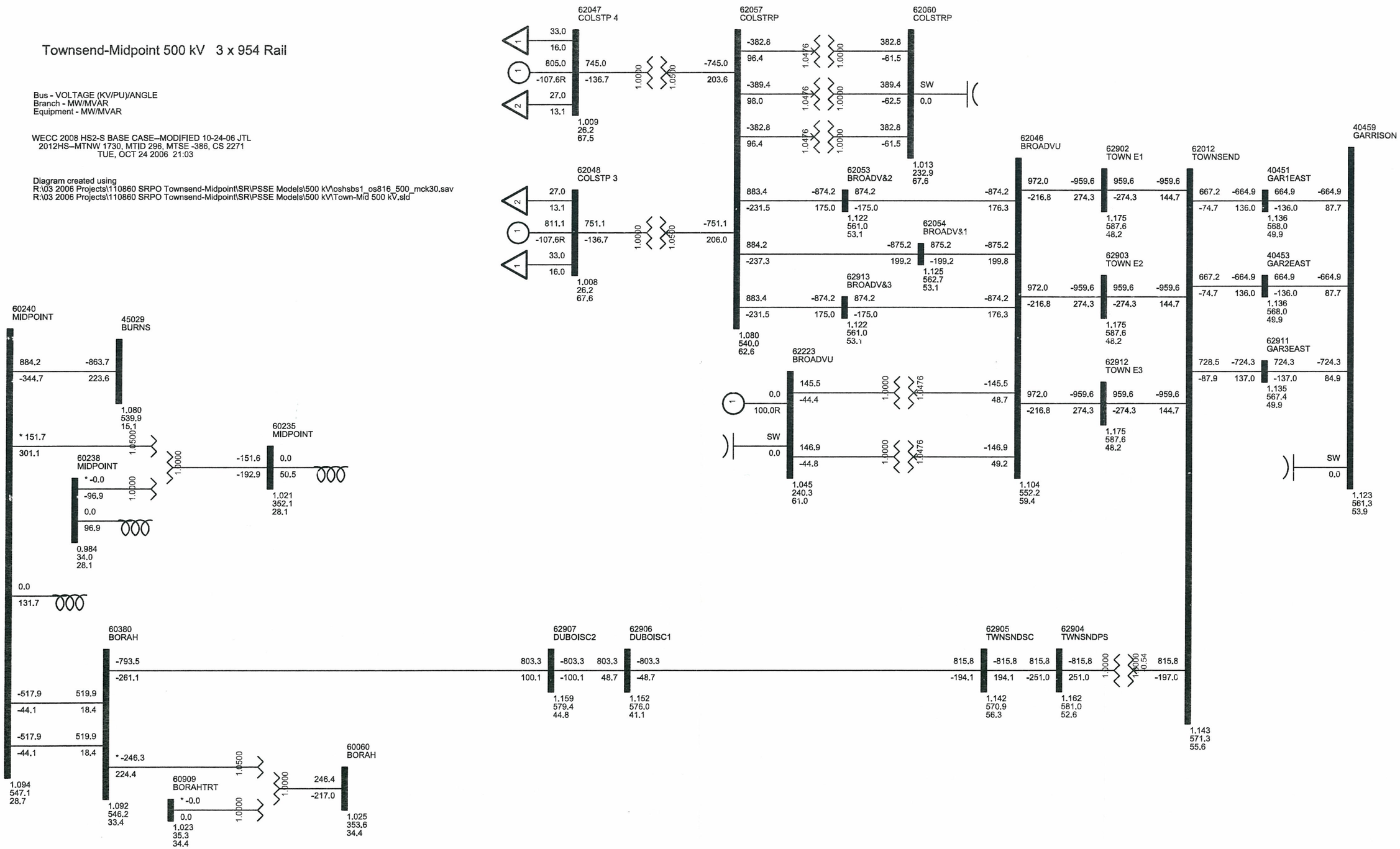

Townsend-Midpoint 500 kV 3 x 954 Rail

Bus - VOLTAGE (KV/PU)/ANGLE
Branch - MW/MVAR
Equipment - MW/MVAR

WECC 2008 HS2-S BASE CASE--MODIFIED 10-24-06 JTL
2012HS--MTNW 1730, MTID 296, MTSE -386, CS 2271
TUE, OCT 24 2006 21:14

Diagram created using
R:\03 2006 Projects\110860 SRPO Townsend-Midpoint\SR\PSSE Models\500 kV\oshsbs1_os816_500_mck30.sav
R:\03 2006 Projects\110860 SRPO Townsend-Midpoint\SR\PSSE Models\500 kV\Town-Mid 500 kV.sld

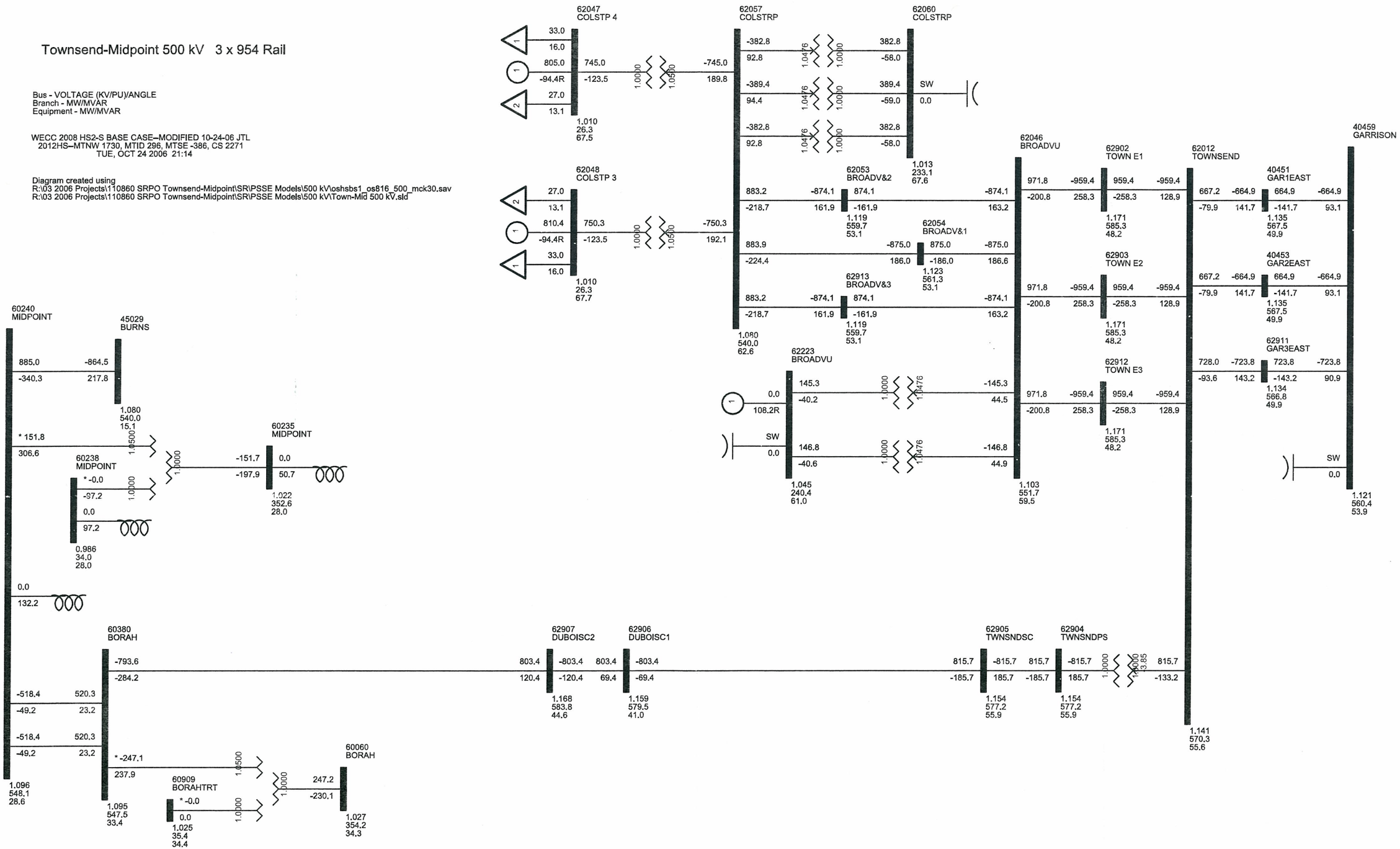

Townsend-Midpoint 500 kV 3 x 954 Rail

Bus - VOLTAGE (KV/PU)/ANGLE
Branch - MW/MVAR
Equipment - MW/MVAR

WECC 2008 HS2-S BASE CASE--MODIFIED 11-7-05 JLR
2012HS--MTNW 1730, MTID 296, MTSE -386, CS 2271
TUE, OCT 24 2006 21:47

Diagram created using
R:\03 2006 Projects\110860 SRPO Townsend-Midpoint\SR\PSSE Models\500 kV\oshsbs1_os816_500_mck30.sav
R:\03 2006 Projects\110860 SRPO Townsend-Midpoint\SR\PSSE Models\500 kV\Town-Mid 500 kV.sld

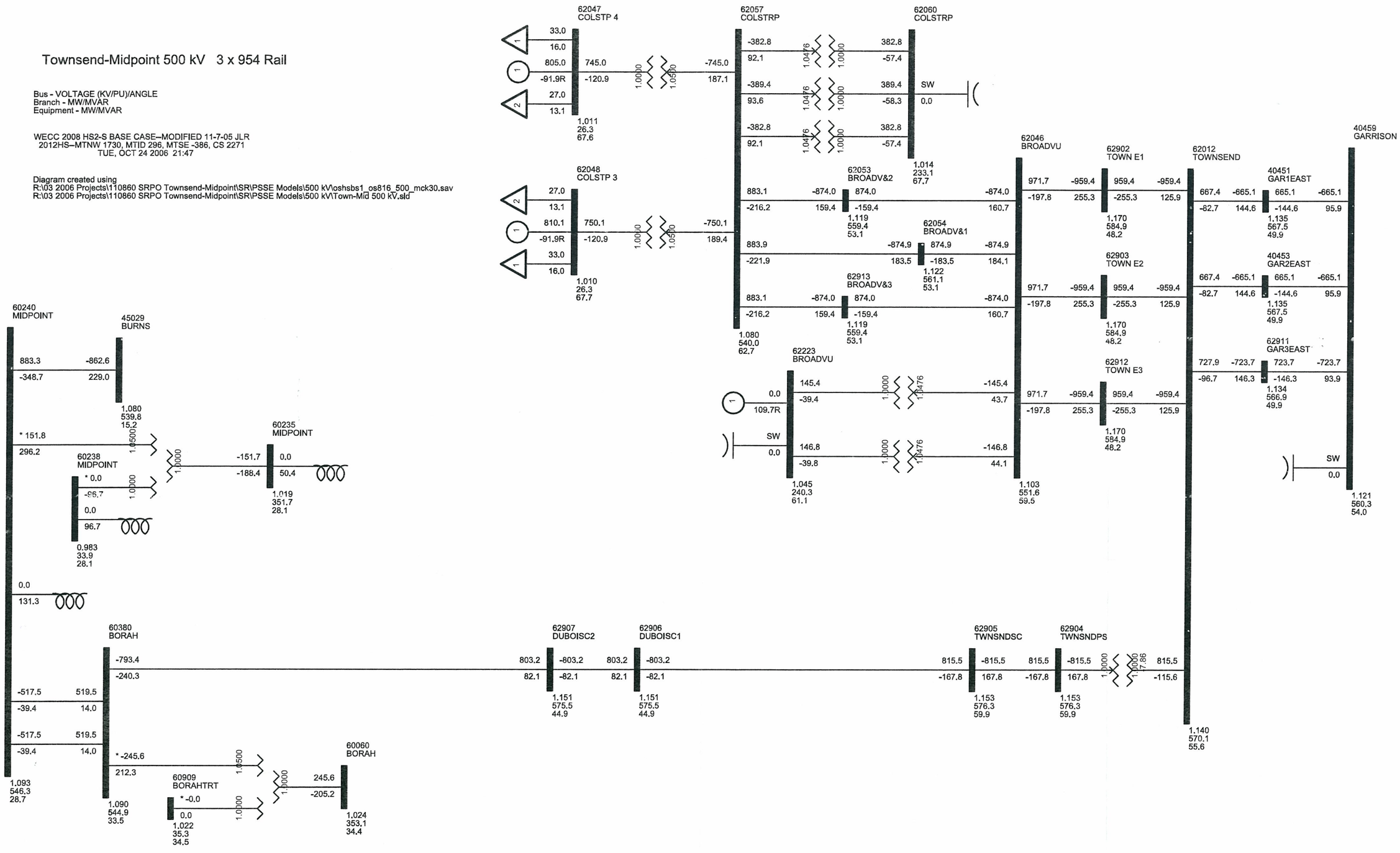

Townsend-Midpoint 500 kV 3 x 954 Rail

Bus - VOLTAGE (KV/PU)/ANGLE
Branch - MW/MVAR
Equipment - MW/MVAR

WECC 2008 HS2-S BASE CASE--MODIFIED 10-25-06 JTL
2012HS--MTNW 1730, MTID 296, MTSE -386, CS 2271
WED, OCT 25 2006 9:51

Diagram created using
R:\03 2006 Projects\110860 SRPO Townsend-Midpoint\SR\PSSE Models\500 kV\oshsbs1_os816_500_mck30.sav
R:\03 2006 Projects\110860 SRPO Townsend-Midpoint\SR\PSSE Models\500 kV\Town-Mid 500 kV.sld

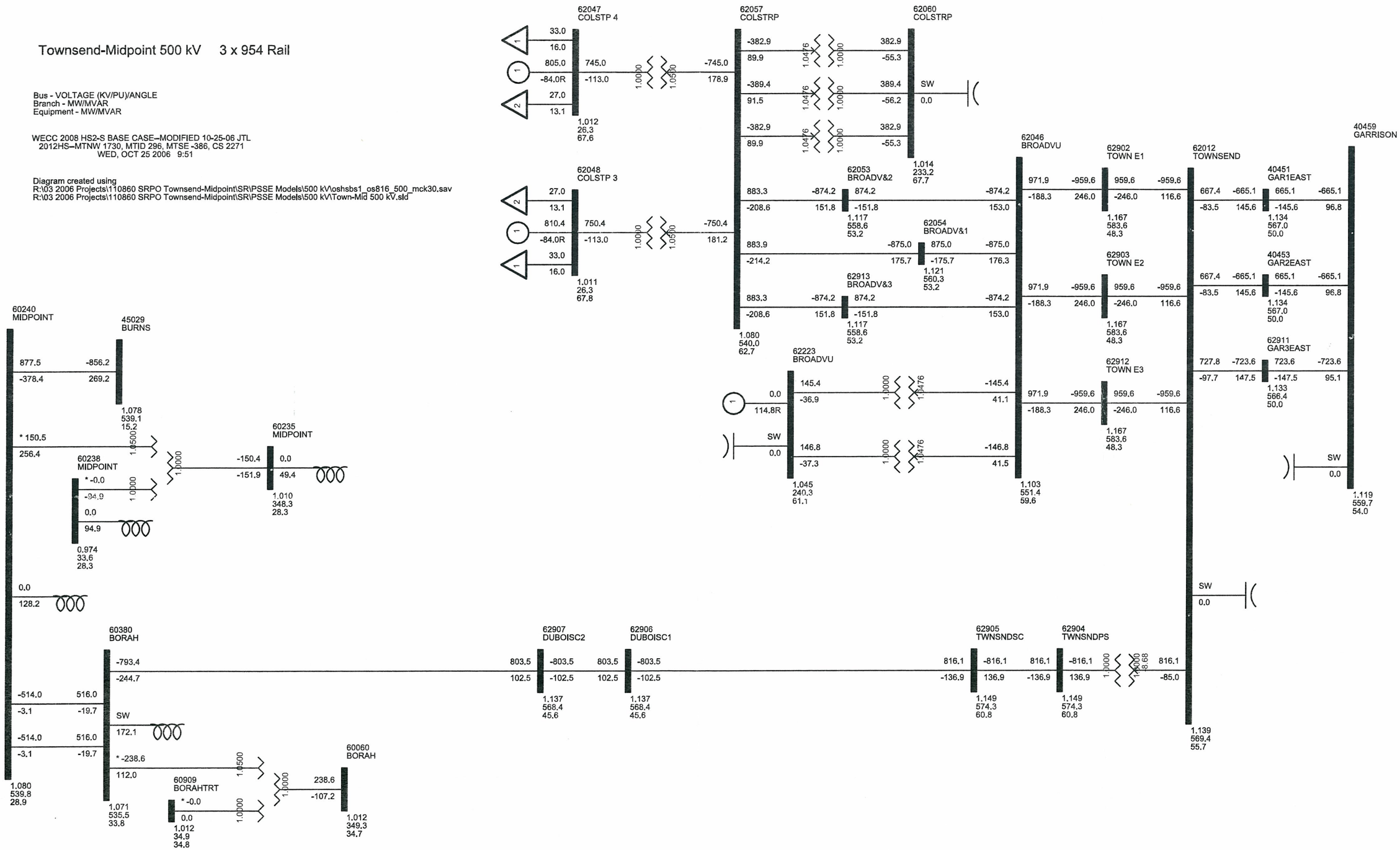

Townsend-Midpoint 500 kV 3 x 1272 Bittern

Bus - VOLTAGE (KV/PU)/ANGLE
Branch - MW/MVAR
Equipment - MW/MVAR

WECC 2008 HS2-S BASE CASE--MODIFIED 10-24-06 JTL
2012HS--MTNW 1730, MTID 296, MTSE -386, CS 2271
TUE, OCT 24 2006 21:05

Diagram created using
R:\03 2006 Projects\110860 SRPO Townsend-Midpoint\SR\PSSE Models\500 kV\oshsbs1_os816_500_mck30.sav
R:\03 2006 Projects\110860 SRPO Townsend-Midpoint\SR\PSSE Models\500 kV\Town-Mid 500 kV.sld

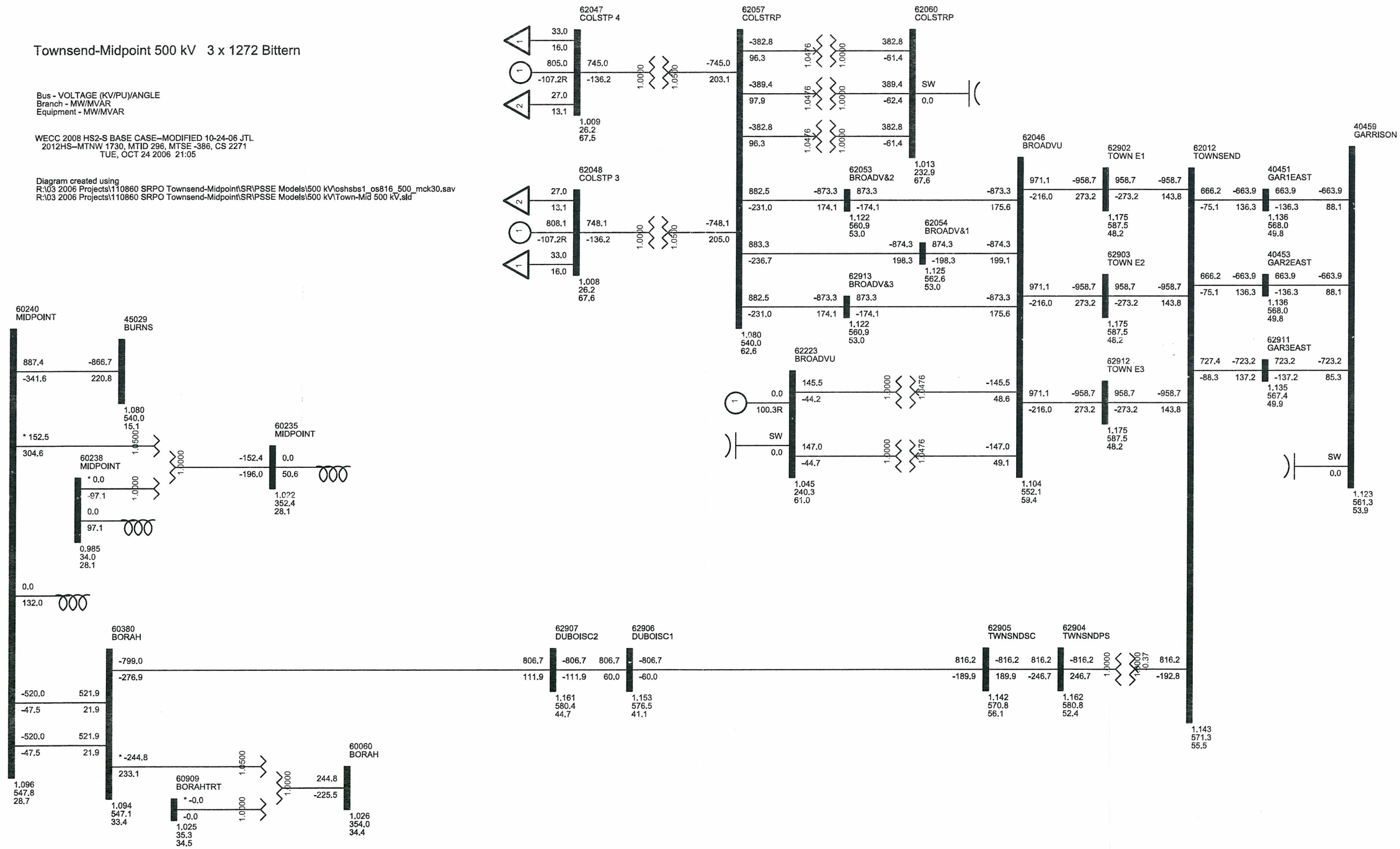

Townsend-Midpoint 500 kV 3 x 1272 Bittern

Bus - VOLTAGE (KV/PU)/ANGLE
Branch - MW/MVAR
Equipment - MW/MVAR

WECC 2008 HS2-S BASE CASE--MODIFIED 10-24-06 JTL
2012HS--MTNW 1730, MTID 296, MTSE -386, CS 2271
TUE, OCT 24 2006 21:13

Diagram created using
R:\03 2006 Projects\110860 SRPO Townsend-Midpoint\SR\PSSE Models\500 kV\oshsbs1_os816_500_mck30.sav
R:\03 2006 Projects\110860 SRPO Townsend-Midpoint\SR\PSSE Models\500 kV\Town-Mid 500 kV.sld

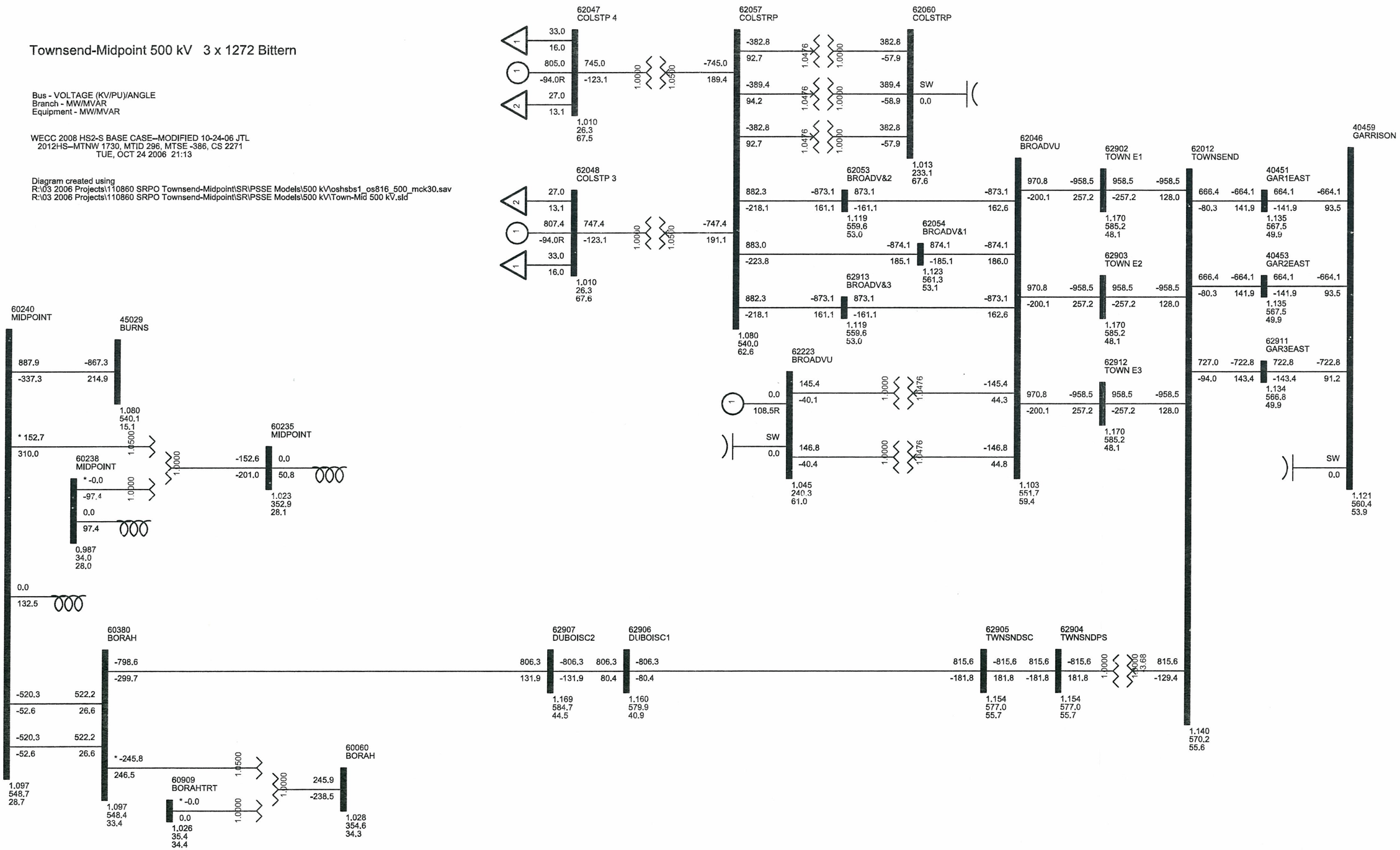

Townsend-Midpoint 500 kV 3 x 1272 Bittern

Bus - VOLTAGE (KV/PU)/ANGLE
Branch - MW/MVAR
Equipment - MW/MVAR

WECC 2008 HS2-S BASE CASE--MODIFIED 11-7-05 JLR
2012HS--MTNW 1730, MTID 296, MTSE -386, CS 2271
TUE, OCT 24 2006 21:48

Diagram created using
R:\03 2006 Projects\110860 SRPO Townsend-Midpoint\SR\PSSE Models\500 kV\oshsbs1_os816_500_mck30.sav
R:\03 2006 Projects\110860 SRPO Townsend-Midpoint\SR\PSSE Models\500 kV\Town-Mid 500 kV.sld

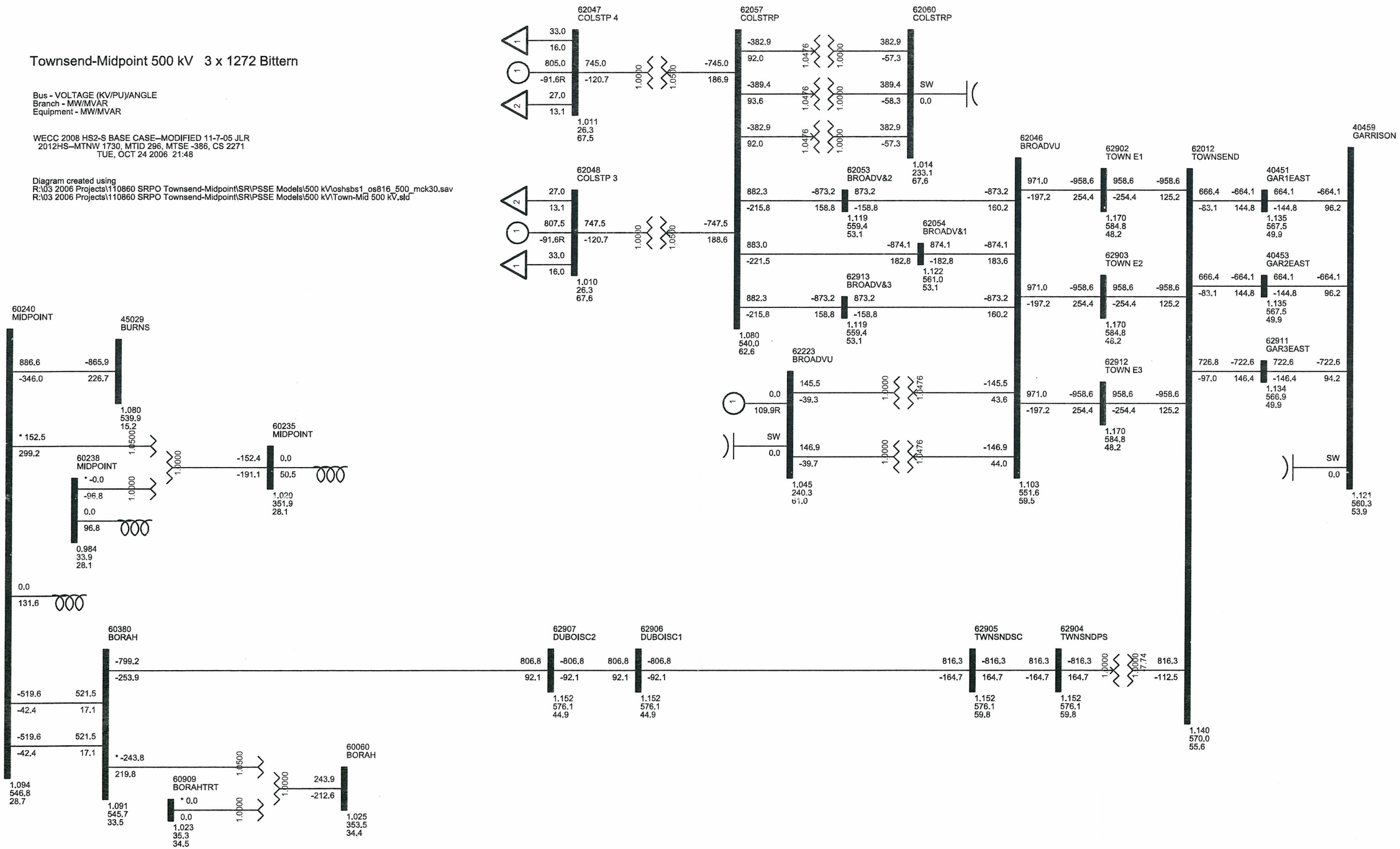

Townsend-Midpoint 500 kV 3 x 1272 Bittern

Bus - VOLTAGE (KV/PU)/ANGLE
Branch - MW/MVAR
Equipment - MW/MVAR

WECC 2008 HS2-S BASE CASE--MODIFIED 10-25-06 JTL
2012HS--MTNW 1730, MTID 296, MTSE -386, CS 2271
WED, OCT 25 2006 9:52

Diagram created using
R:\03 2006 Projects\110860 SRPO Townsend-Midpoint\SR\PSSE Models\500 kV\oshsbs1_os816_500_mck30.sav
R:\03 2006 Projects\110860 SRPO Townsend-Midpoint\SR\PSSE Models\500 kV\Town-Mid 500 kV.sld

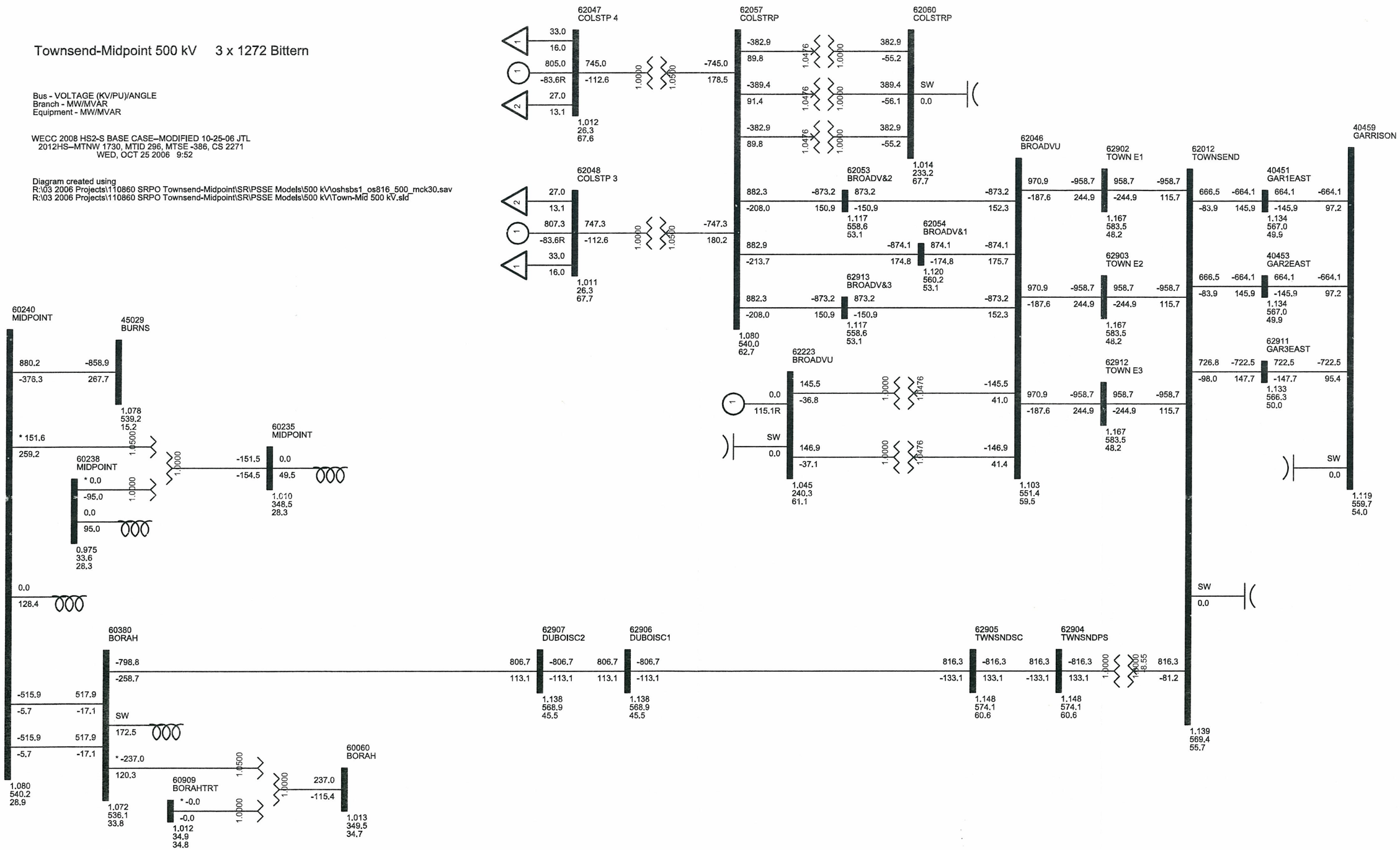

Townsend-Midpoint 500 kV 3 x 1590 Falcon

Bus - VOLTAGE (KV/PU)/ANGLE
Branch - MW/MVAR
Equipment - MW/MVAR

WECC 2008 HS2-S BASE CASE–MODIFIED 10-24-06 JTL
2012HS–MTNW 1730, MTID 296, MTSE -386, CS 2271
TUE, OCT 24 2006 21:06

Diagram created using
R:\03 2006 Projects\110860 SRPO Townsend-Midpoint\SR\PSSE Models\500 kV\oshsbs1_os816_500_mck30.sav
R:\03 2006 Projects\110860 SRPO Townsend-Midpoint\SR\PSSE Models\500 kV\Town-Mid 500 kV.sld

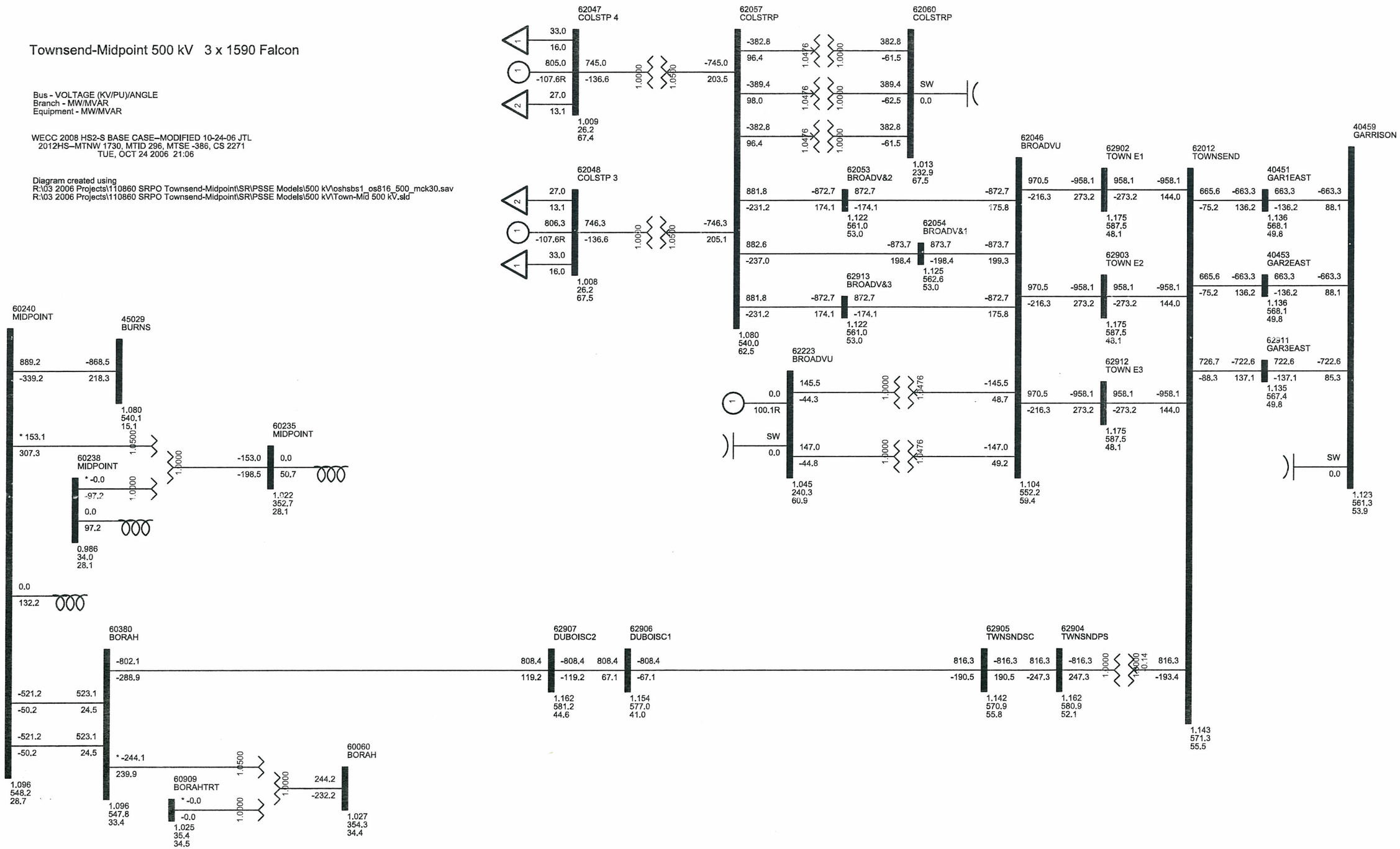

Townsend-Midpoint 500 kV 3 x 1590 Falcon

Bus - VOLTAGE (KV/PU)/ANGLE
Branch - MW/MVAR
Equipment - MW/MVAR

WECC 2008 HS2-S BASE CASE--MODIFIED 10-24-06 JTL
2012HS--MTNW 1730, MTID 296, MTSE -386, CS 2271
TUE, OCT 24 2006 21:09

Diagram created using
R:\03 2006 Projects\110860 SRPO Townsend-Midpoint\SR\PSSE Models\500 kV\oshsbs1_os816_500_mck30.sav
R:\03 2006 Projects\110860 SRPO Townsend-Midpoint\SR\PSSE Models\500 kV\Town-Mid 500 kV.sld

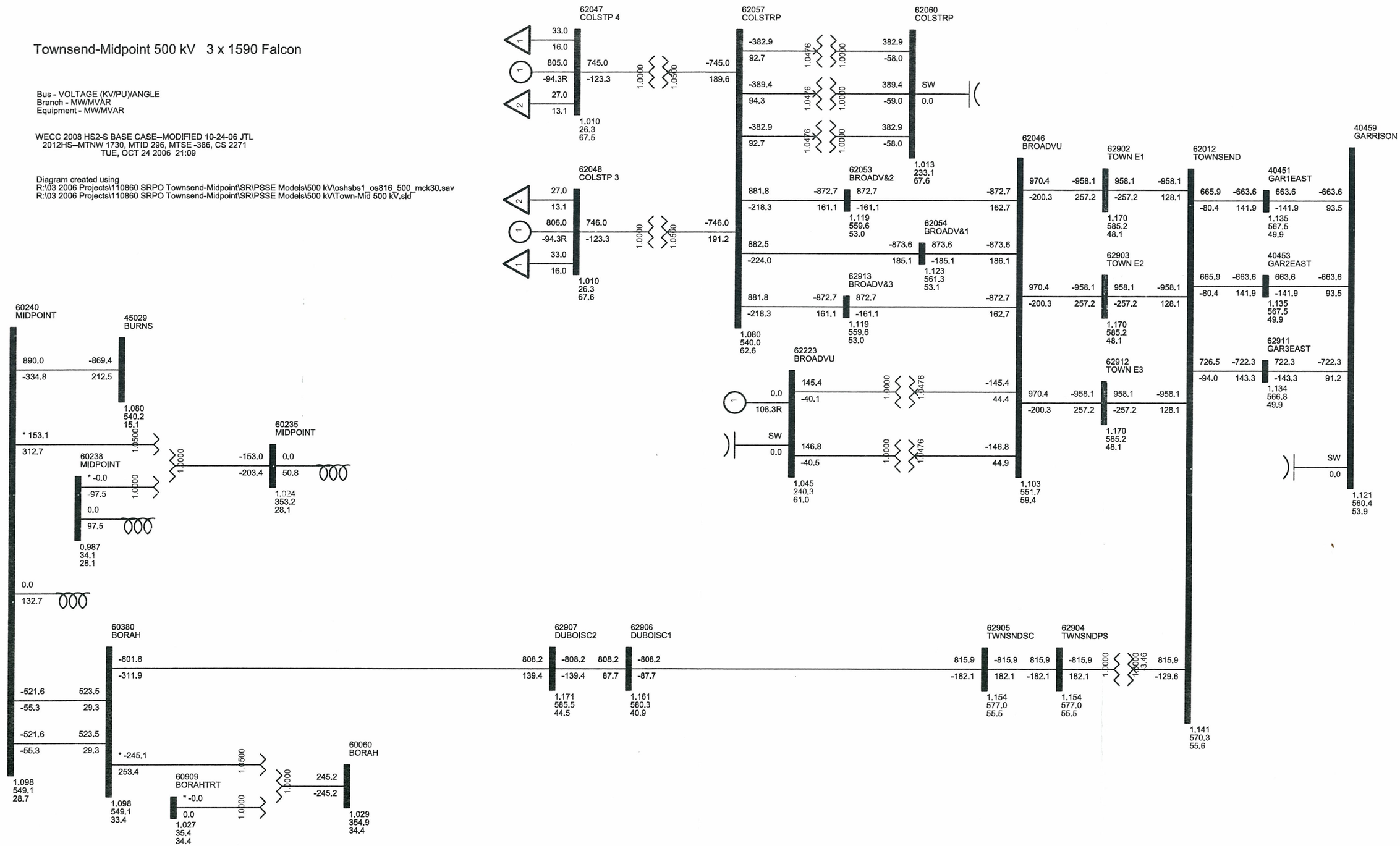

Townsend-Midpoint 500 kV 3 x 1590 Falcon

Bus - VOLTAGE (KV/PU)/ANGLE
Branch - MW/MVAR
Equipment - MW/MVAR

WECC 2008 HS2-S BASE CASE–MODIFIED 10-24-06 JTL
2012HS–MTNW 1730, MTID 296, MTSE -386, CS 2271
TUE, OCT 24 2006 21:17

Diagram created using
R:\03 2006 Projects\110860 SRPO Townsend-Midpoint\SR\PSSE Models\500 kV\oshsbs1_os816_500_mck30.sav
R:\03 2006 Projects\110860 SRPO Townsend-Midpoint\SR\PSSE Models\500 kV\Town-Mid 500 kV.sld

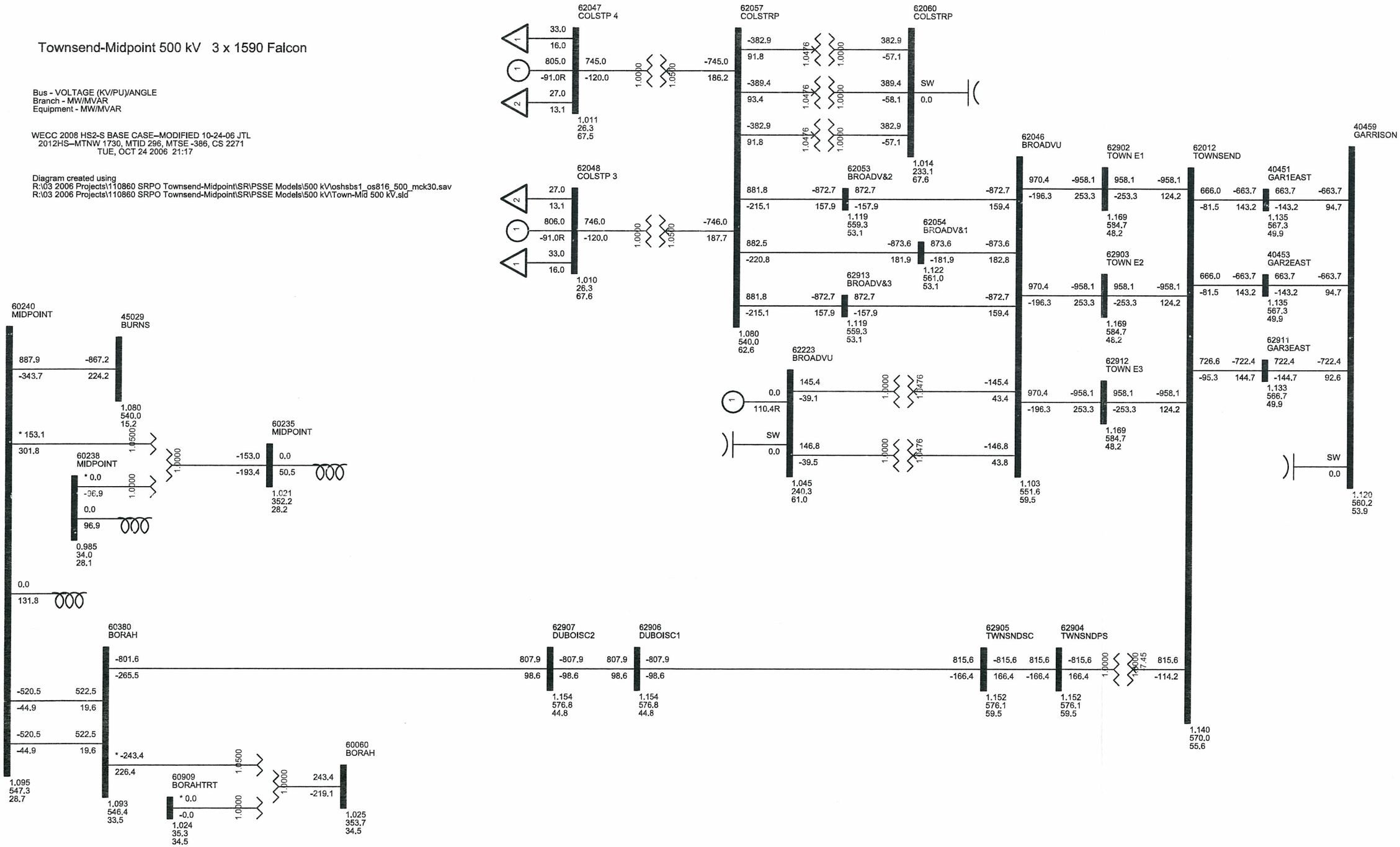

Townsend-Midpoint 500 kV 3 x 1590 Falcon

Bus - VOLTAGE (KV/PU)/ANGLE
Branch - MW/MVAR
Equipment - MW/MVAR

WECC 2008 HS2-S BASE CASE–MODIFIED 10-25-06 JTL
2012HS–MTNW 1730, MTID 296, MTSE -386, CS 2271
WED, OCT 25 2006 9:53

Diagram created using
R:\03 2006 Projects\110860 SRPO Townsend-Midpoint\SR\PSSE Models\500 kV\oshsbs1_os816_500_mck30.sav
R:\03 2006 Projects\110860 SRPO Townsend-Midpoint\SR\PSSE Models\500 kV\Town-Mid 500 kV.sld

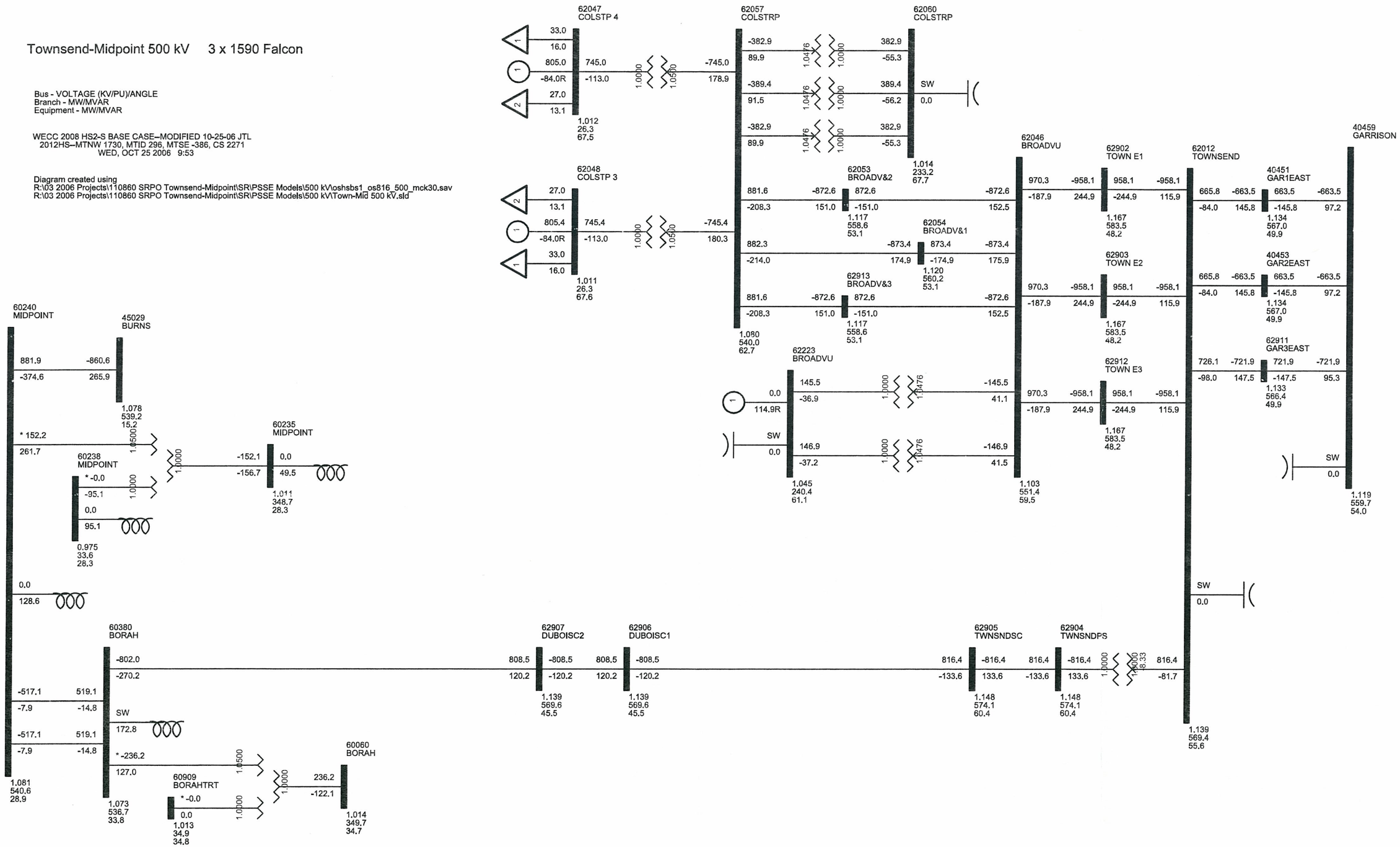

Townsend-Midpoint 500 kV 3 x 1590 Falcon

- No Series Compensation on Townsend-Borah Line
- 0 MW to Borah

Bus - VOLTAGE (KV/PU)/ANGLE
Branch - MW/MVAR
Equipment - MW/MVAR

WECC 2008 HS2-S BASE CASE–MODIFIED 11-1-06 JTL
2012HS–MTNW 1730, MTID 296, MTSE -386, CS 2271
WED, NOV 01 2006 12:15

Diagram created using
R:\03 2006 Projects\110860 SRPO Townsend-Midpoint\SR\PSSE Models\500 kV\oshsbs1_os816_500_mck30-10-25-06.sav
R:\03 2006 Projects\110860 SRPO Townsend-Midpoint\SR\PSSE Models\500 kV\Town-Mid 500 kV 11-1-06.sld

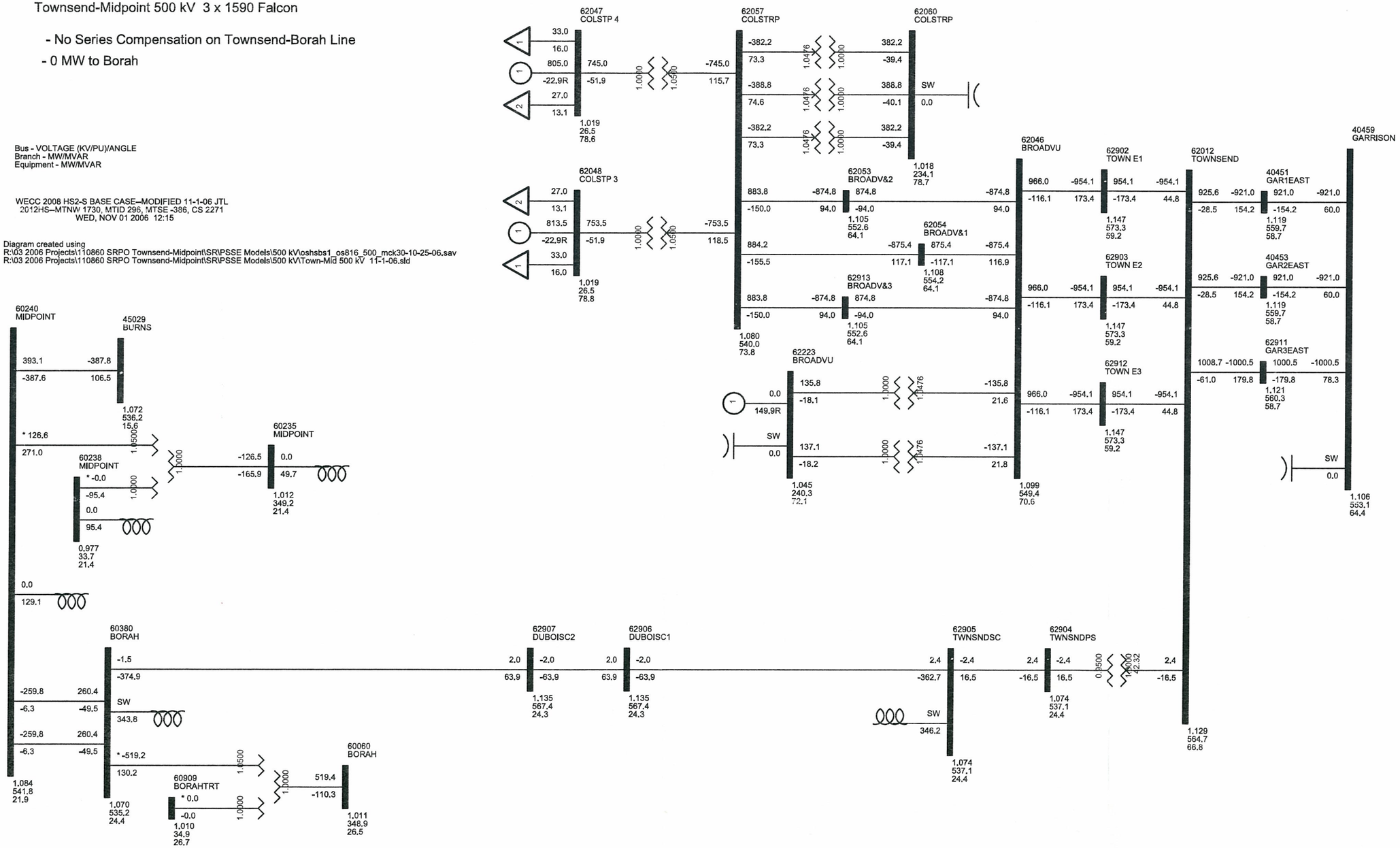

Townsend-Midpoint 500 kV 3 x 1590 Falcon

- 20% Series Compensation on Townsend-Borah Line
- ~1200 MW to Borah

Bus - VOLTAGE (KV/PU)/ANGLE
Branch - MW/MVAR
Equipment - MW/MVAR

WECC 2008 HS2-S BASE CASE--MODIFIED 11-1-06 JTL
2012HS--MTNW 1730, MTID 296, MTSE -386, CS 2271
WED, NOV 01 2006 12:04

Diagram created using
R:\03 2006 Projects\110860 SRPO Townsend-Midpoint\SR\PSSE Models\500 kV\oshsbs1_os816_500_mck30-10-25-06.sav
R:\03 2006 Projects\110860 SRPO Townsend-Midpoint\SR\PSSE Models\500 kV\Town-Mid 500 kV 11-1-06.sld

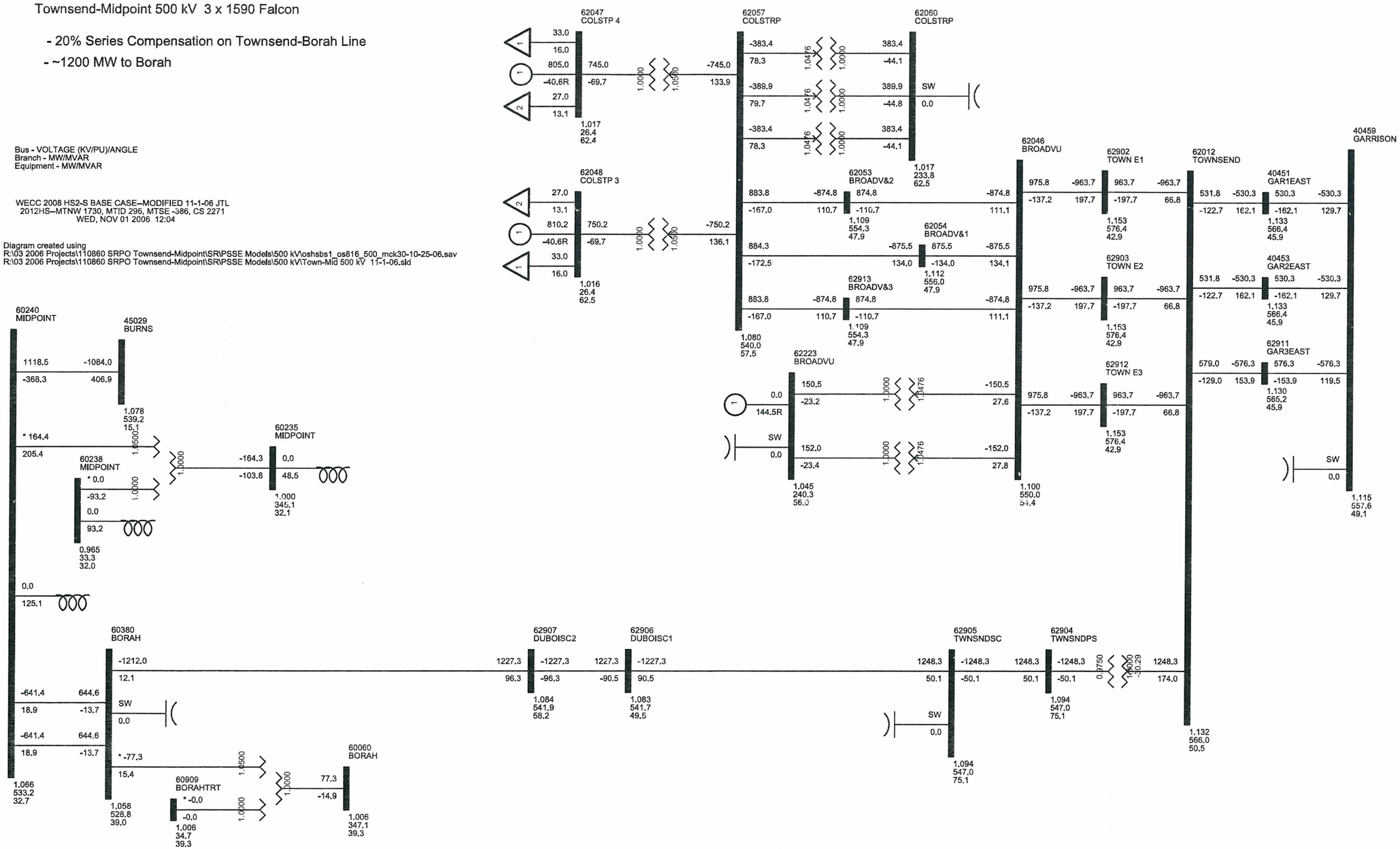

Townsend-Midpoint 500 kV 3 x 1590 Falcon

- 70% Series Compensation on Townsend-Borah Line
- ~1600 MW to Borah

Bus - VOLTAGE (KV/PU)/ANGLE
Branch - MW/MVAR
Equipment - MW/MVAR

WECC 2008 HS2-S BASE CASE--MODIFIED 11-1-06 JTL
2012HS--MTNW 1730, MTID 296, MTSE -386, CS 2271
WED, NOV 01 2006 13:54

Diagram created using
R:\03 2006 Projects\110860 SRPO Townsend-Midpoint\SR\PSSE Models\500 kV\oshsbs1_os816_500_mck30-10-25-06.sav
R:\03 2006 Projects\110860 SRPO Townsend-Midpoint\SR\PSSE Models\500 kV\Town-Mid 500 kV 11-1-06.sld

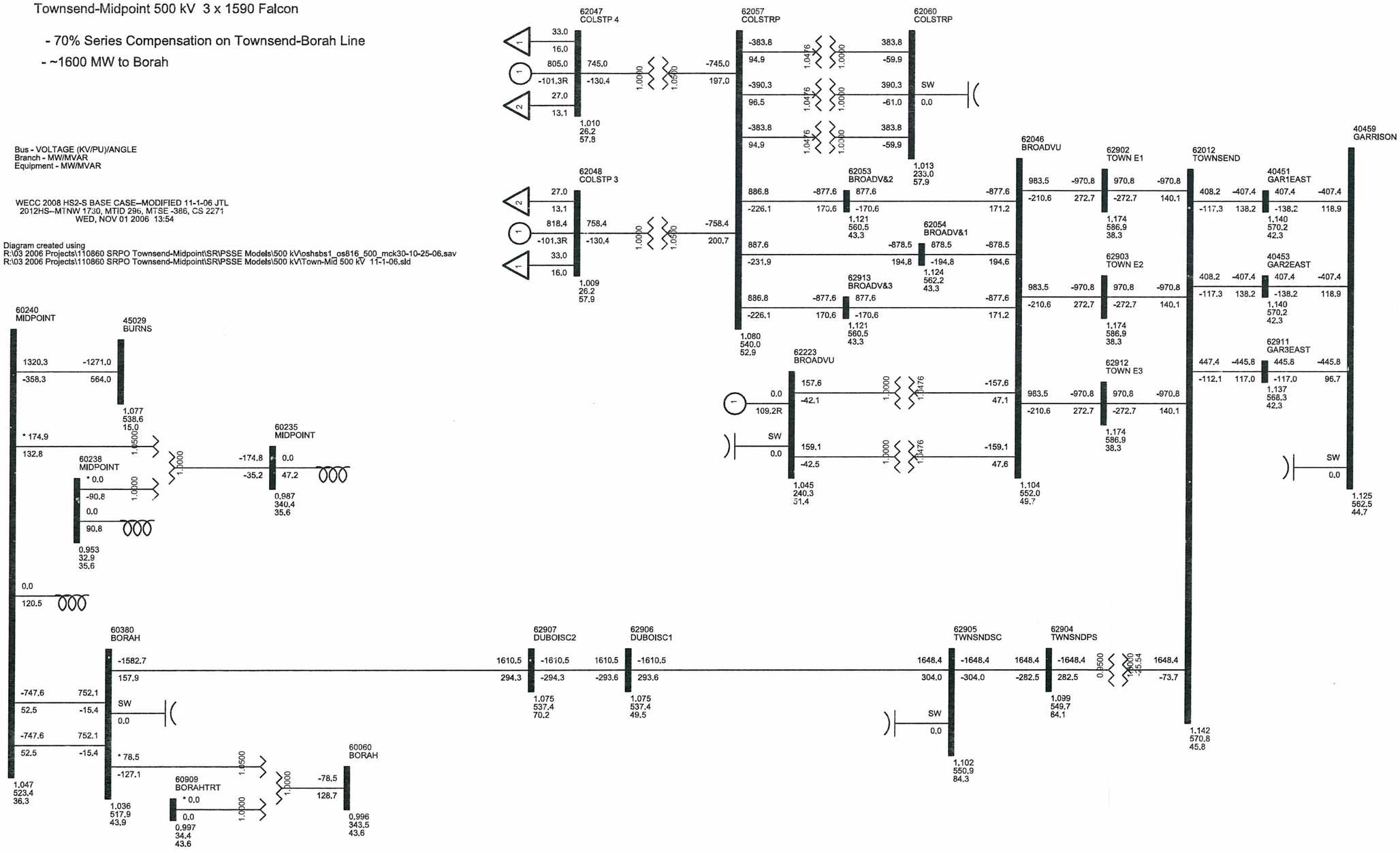

Townsend-Midpoint 345 kV - 2 x 1272 ACSR Bittern

Bus - VOLTAGE (KV/PU)/ANGLE
Branch - MW/MVAR
Equipment - MW/MVAR

WECC 2008 HS2-S BASE CASE--MODIFIED 10-24-06 JTL
2012HS--MTNW 1730, MTID 300, MTSE -350, CS 2270
TUE, OCT 24 2006 14:27

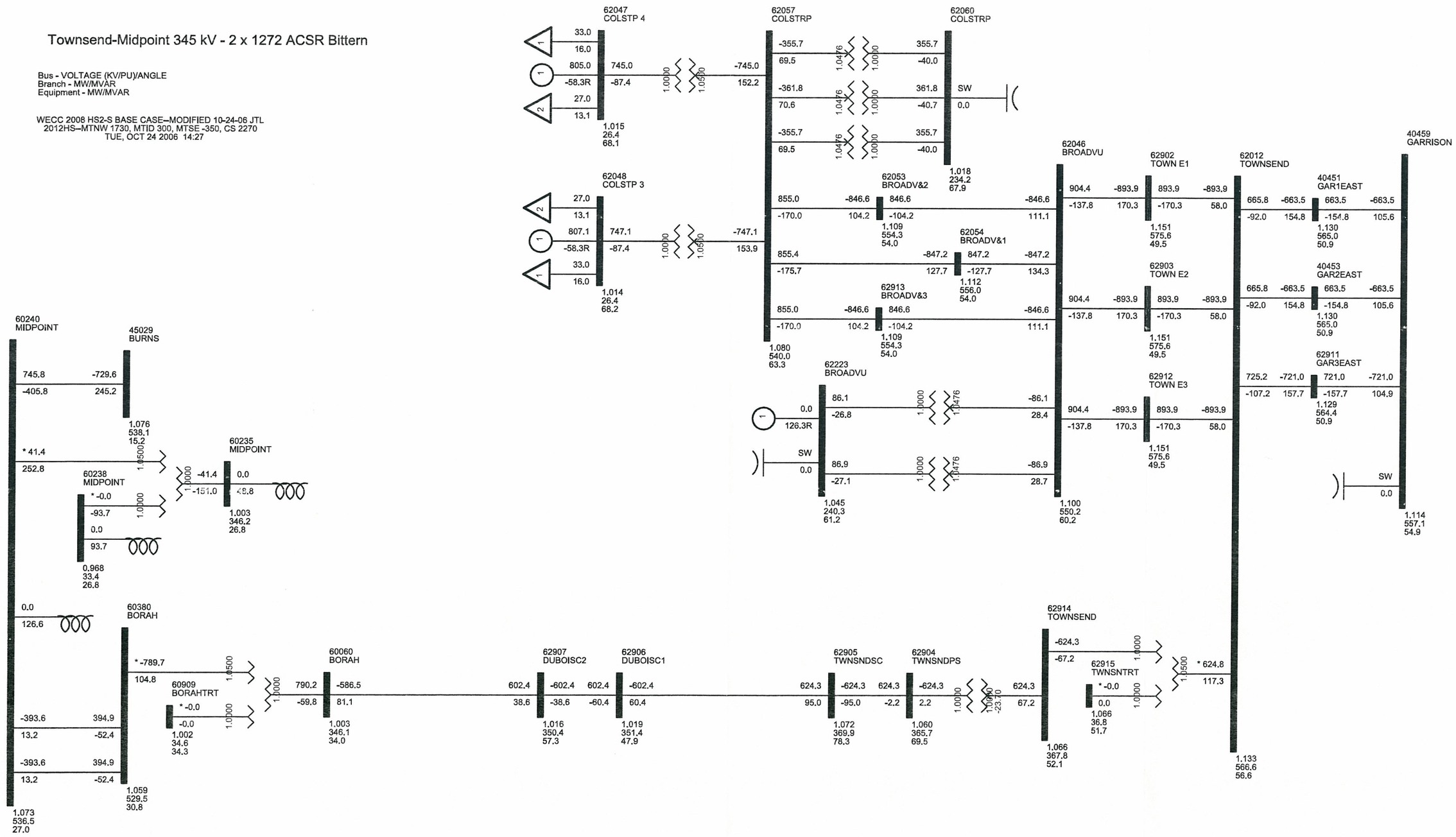

Townsend-Midpoint 345 kV - 2 x 1272 ACSR Bittern

Bus - VOLTAGE (KV/PU)/ANGLE
Branch - MW/MVAR
Equipment - MW/MVAR

WECC 2008 HS2-S BASE CASE–MODIFIED 11-7-05 JLR
2012HS–MTNW 1730, MTID 300, MTSE -350, CS 2270
TUE, OCT 24 2006 14:33

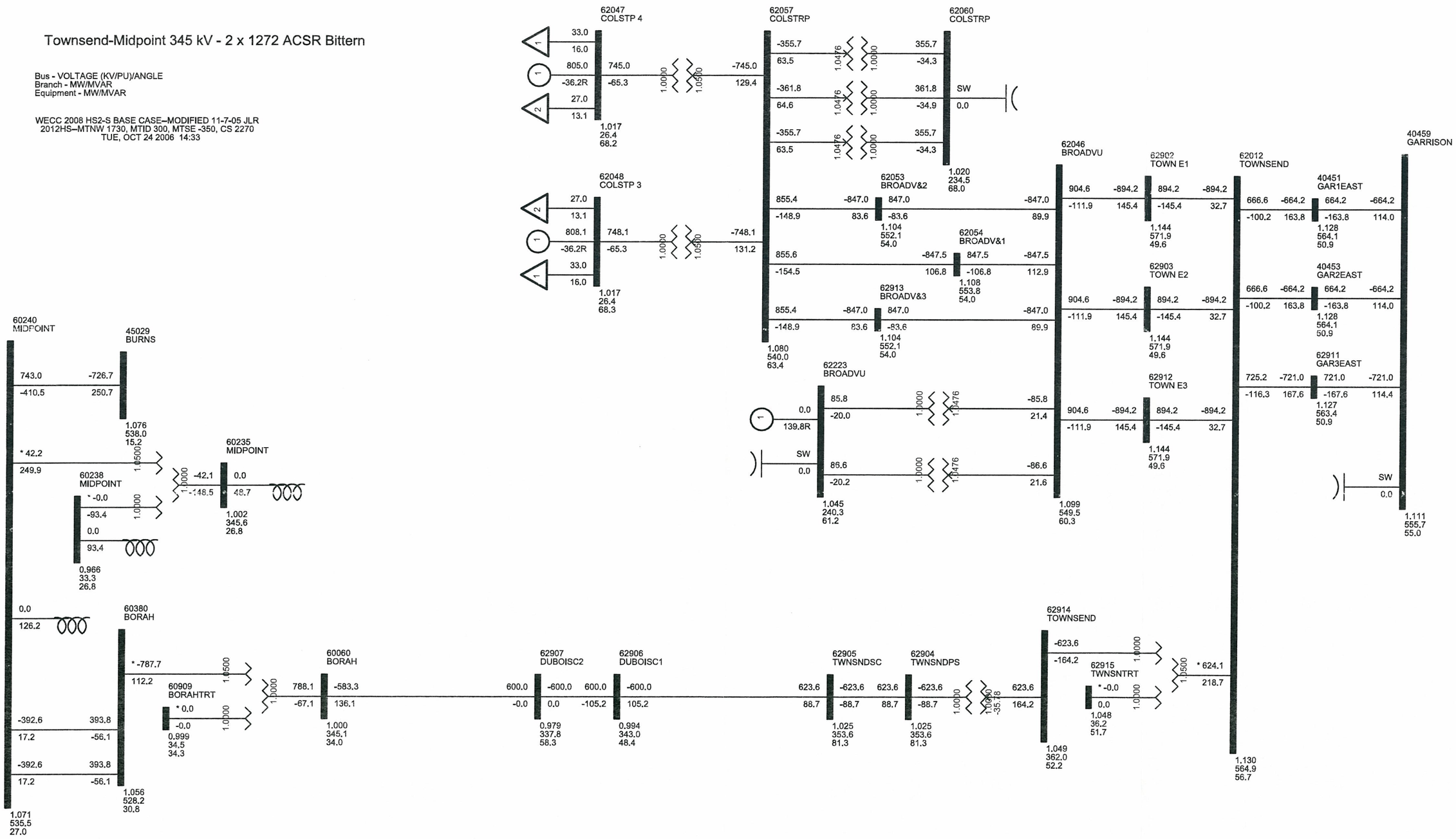

Townsend-Midpoint 230 kV - 2x 1272 ACSR Bittern

Bus - VOLTAGE (KV/PU)/ANGLE
Branch - MW/MVAR
Equipment - MW/MVAR

WECC 2008 HS2-S BASE CASE--MODIFIED 10-24-06 JTL
2012HS--MTNW 1730, MTID 295, MTSE -315, CS 2270
TUE, OCT 24 2006 14:36

Diagram created using
R:\03 2006 Projects\110860 SRPO Townsend-Midpoint\SR\PSSE Models\230 kV\o2hs1_431_30.sav
R:\03 2006 Projects\110860 SRPO Townsend-Midpoint\SR\PSSE Models\230 kV\Town-Mid 230 kV.sld

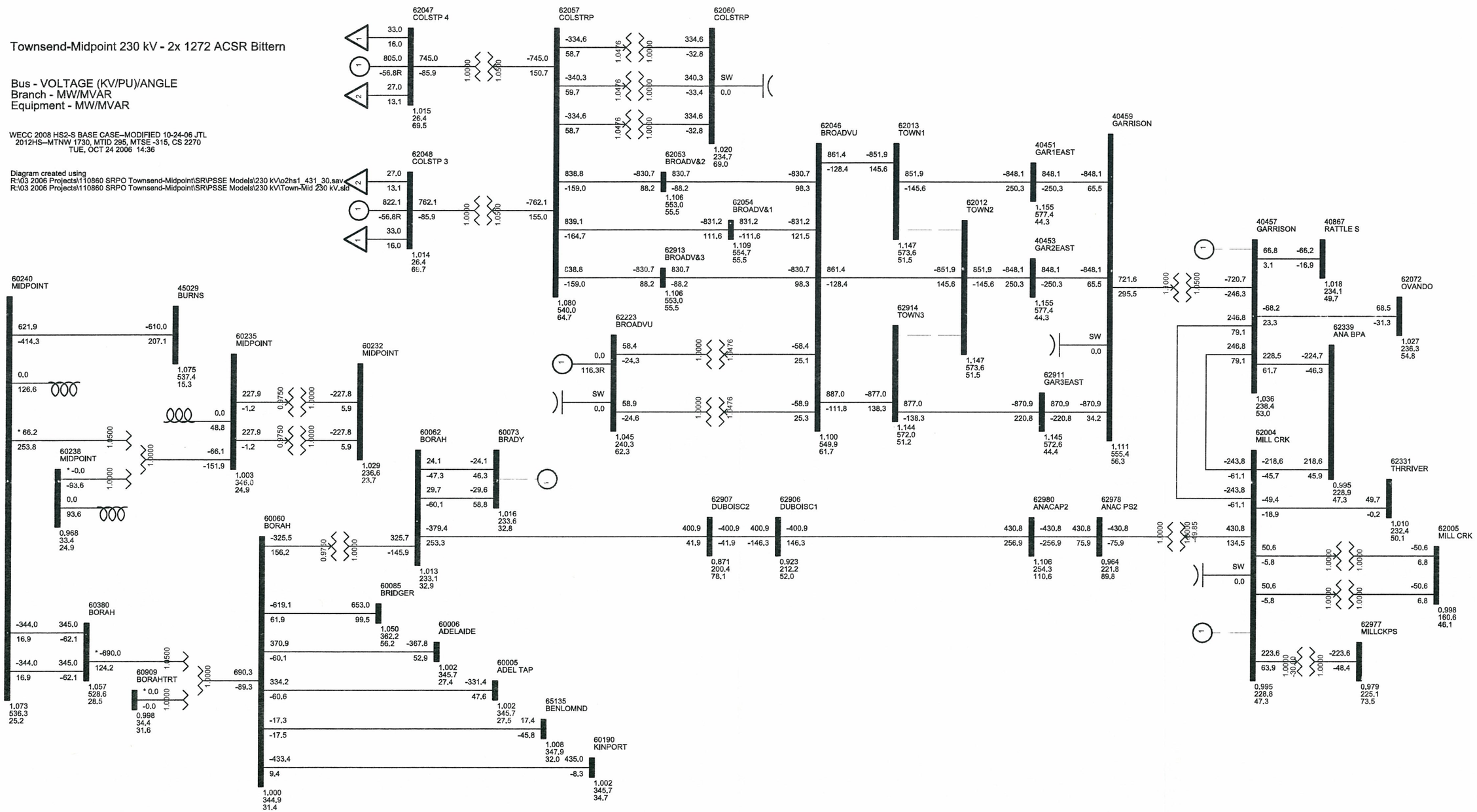

Townsend-Midpoint 230 kV - 3 x 1780 ACSR Chukar

Bus - VOLTAGE (KV/PU)/ANGLE
Branch - MW/MVAR
Equipment - MW/MVAR

WECC 2008 HS2-S BASE CASE--MODIFIED 11-7-05 JLR
2012HS--MTNW 1730, MTID 295, MTSE -315, CS 2270
TUE, OCT 24 2006 15:03

Diagram created using
R:\03 2006 Projects\110860 SRPO Townsend-Midpoint\SR\PSSE Models\230 kV\o2hs1_431_30.sav
R:\03 2006 Projects\110860 SRPO Townsend-Midpoint\SR\PSSE Models\230 kV\Town-Mid 230 kV.sld

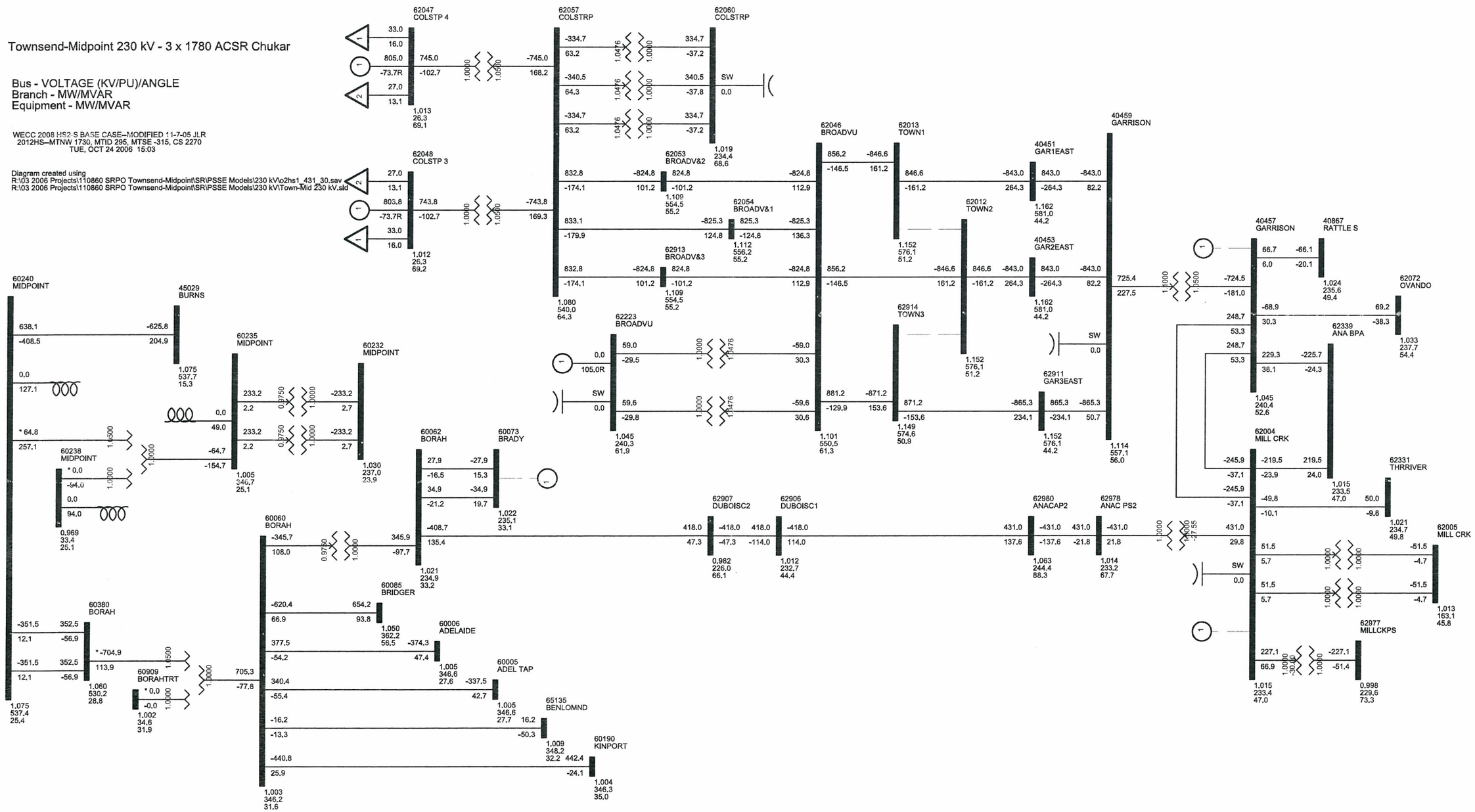

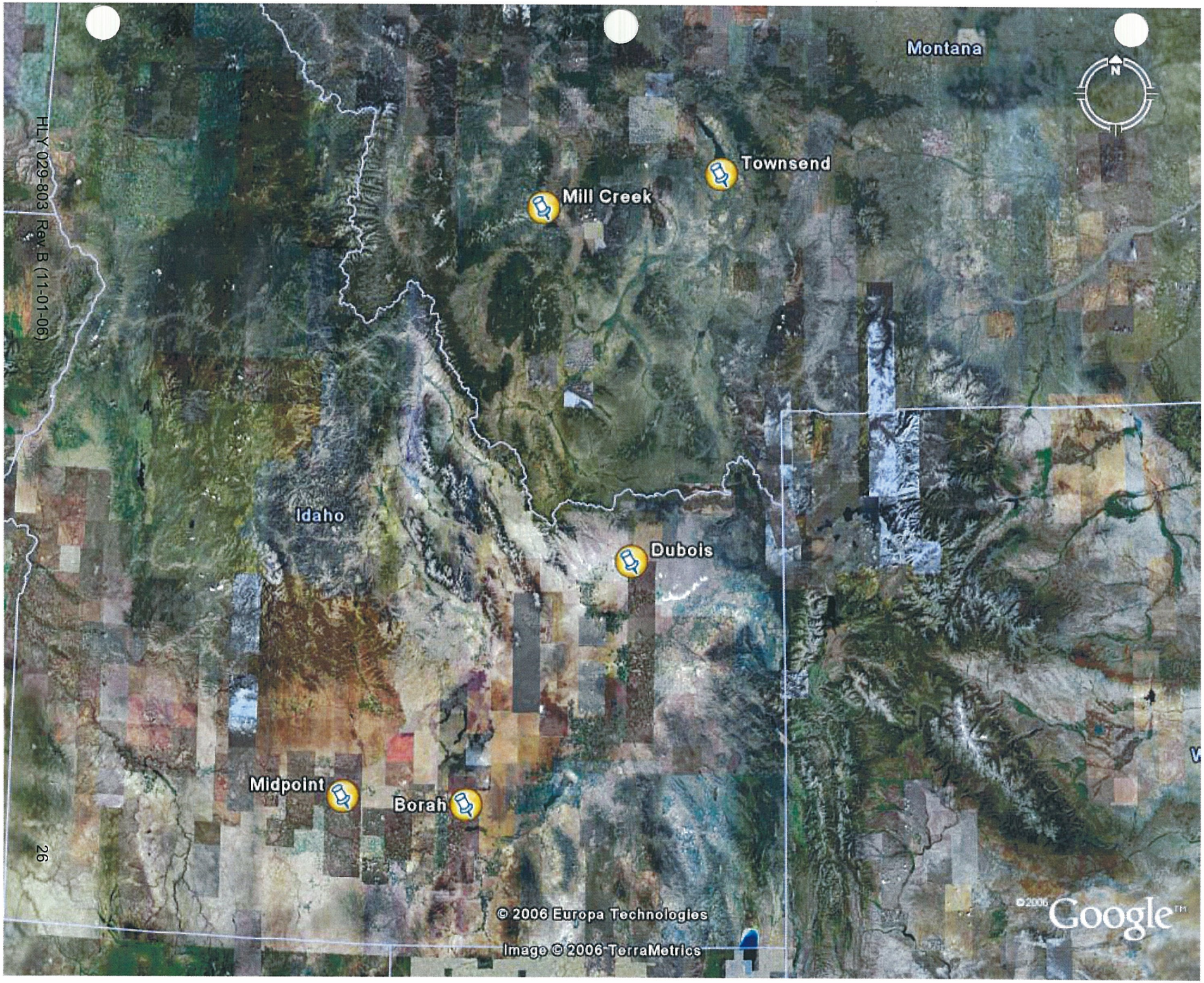
Montana
N
Townsend
Mill Creek
Idaho
Dubois
Midpoint
Borah
© 2006 Europa Technologies
Image © 2006 TerraMetrics
©2006 Google™

Results From ATP Line Constants Program - 500 kV Tower Structure

Typical Geometry:
Conductor spacing in a bundle: 18 inches
Spacing between phase bundles: 38 feet
Phase conductor height: 85 feet
Horizontal arrangement

Mallard 795 (4 conductor bundles):

Sequence	Surge impedance magnitude(ohm)	Surge impedance angle(degr.)	Attenuation db/mile	velocity miles/s	Wavelength miles	Resistance ohm/mile	Reactance ohm/mile	Susceptance mho/mile
Zero :	6.71977E+02	-4.23781E+00	1.94778E-03	1.24571E+05	2.07618E+03	3.00554E-01	2.01692E+00	4.51595E-06
Positive:	2.52709E+02	-1.57834E+00	4.94802E-04	1.82349E+05	3.03914E+03	**2.87808E-02**	**5.21860E-01**	**8.18415E-06**

Rail 954 (3 conductor bundles):

Sequence	Surge impedance magnitude(ohm)	Surge impedance angle(degr.)	Attenuation db/mile	velocity miles/s	Wavelength miles	Resistance ohm/mile	Reactance ohm/mile	Susceptance mho/mile
Zero :	6.96845E+02	-4.19719E+00	1.90332E-03	1.26255E+05	2.10425E+03	3.04577E-01	2.06399E+00	4.29649E-06
Positive:	2.75475E+02	-1.65321E+00	5.18330E-04	1.82333E+05	3.03889E+03	**3.28643E-02**	**5.68860E-01**	**7.50867E-06**

Bittern 1272 (3 conductor bundles):

Sequence	Surge impedance magnitude(ohm)	Surge impedance angle(degr.)	Attenuation db/mile	velocity miles/s	Wavelength miles	Resistance ohm/mile	Reactance ohm/mile	Susceptance mho/mile
Zero :	6.93544E+02	-4.10492E+00	1.86415E-03	1.26064E+05	2.10106E+03	2.96931E-01	2.05805E+00	4.32297E-06
Positive:	2.72467E+02	-1.28253E+00	4.02062E-04	1.82335E+05	3.03891E+03	**2.52182E-02**	**5.62923E-01**	**7.59026E-06**

Falcon 1590 (3 conductor bundles):

Sequence	Surge impedance magnitude(ohm)	Surge impedance angle(degr.)	Attenuation db/mile	velocity miles/s	Wavelength miles	Resistance ohm/mile	Reactance ohm/mile	Susceptance mho/mile
Zero :	6.90423E+02	-4.05476E+00	1.84409E-03	1.25872E+05	2.09787E+03	2.92432E-01	2.05229E+00	4.34884E-06
Positive:	2.69602E+02	-1.06487E+00	3.33826E-04	1.82326E+05	3.03876E+03	**2.07197E-02**	**5.57162E-01**	**7.67070E-06**

Results From ATP Line Constants Program - 345 kV Tower Structure

Typical Geometry:
Conductor spacing in a bundle: 18 inches
Spacing between phase bundles: 24 feet
Phase conductor height: 70 feet
Horizontal arrangement

Bittern 1272 (2 conductor bundles):

Sequence	Surge impedance magnitude(ohm)	Surge impedance angle(degr.)	Attenuation db/mile	velocity miles/s	Wavelength miles	Resistance ohm/mile	Reactance ohm/mile	Susceptance mho/mile
Zero :	7.62165E+02	-3.96404E+00	1.78068E-03	1.27429E+05	2.12382E+03	3.11753E-01	2.23862E+00	3.89093E-06
Positive:	2.79809E+02	-1.86875E+00	5.86798E-04	1.82071E+05	3.03451E+03	**3.77864E-02**	**5.78442E-01**	**7.40389E-06**

Results From ATP Line Constants Program - 230 kV Tower Structure

Typical Geometry:
Conductor spacing in a bundle: 18 inches
Spacing between phase bundles: 24 feet
Phase conductor height: 60 feet
Horizontal arrangement

Bittern 1272 (2 conductor bundles):

Sequence	Surge impedance magnitude(ohm)	Surge impedance angle(degr.)	Attenuation db/mile	velocity miles/s	Wavelength miles	Resistance ohm/mile	Reactance ohm/mile	Susceptance mho/mile
Zero :	7.61013E+02	-3.93883E+00	1.78858E-03	1.26057E+05	2.10095E+03	3.12672E-01	2.25978E+00	3.93912E-06
Positive:	2.91015E+02	-1.79920E+00	5.64058E-04	1.82357E+05	3.03928E+03	**3.77781E-02**	**6.00732E-01**	**7.10735E-06**

Chukar 1780 (3 conductor bundles):

Sequence	Surge impedance magnitude(ohm)	Surge impedance angle(degr.)	Attenuation db/mile	velocity miles/s	Wavelength miles	Resistance ohm/mile	Reactance ohm/mile	Susceptance mho/mile
Zero :	7.09398E+02	-3.87670E+00	1.80338E-03	1.23044E+05	2.05073E+03	2.93899E-01	2.15857E+00	4.32888E-06
Positive:	2.41627E+02	-1.08449E+00	3.40281E-04	1.82163E+05	3.03605E+03	**1.89287E-02**	**4.99785E-01**	**8.56649E-06**

110860 Townsend - Midpoint Per Unit Calculations 500kV

$MVA := 10^6 W$ $\quad V_{base} := 500kV$ $\quad S_{base} := 100MVA$

$Z_{base} := \frac{V_{base}^2}{S_{base}}$ $\quad Z_{base} = 2500\,\Omega$ $\quad Length1 := 186mi$

$Length2 := 139mi$

Mallard 795

Townsend - Dubois

$Z_{mallard} := (0.02878 + j \cdot 0.522) \cdot \frac{\Omega}{mi}$ $\quad Z_{mallard_pu} := \frac{Z_{mallard}}{Z_{base}} \cdot Length1$

$Z_{mallard_pu} = 0.00214 + 0.03884i$

$Y_{mallard} := 8.184 \cdot 10^{-6} \cdot \frac{mho}{mi}$ $\quad Y_{mallard_pu} := Y_{mallard} \cdot Z_{base} \cdot Length1$

$Y_{mallard_pu} = 3.80556$

Dubois - Borah

$Z_{mallard} := (0.02878 + j \cdot 0.522) \cdot \frac{\Omega}{mi}$ $\quad Z_{mallard_pu} := \frac{Z_{mallard}}{Z_{base}} \cdot Length2$

$Z_{mallard_pu} = 0.0016 + 0.02902i$

$Y_{mallard} := 8.184 \cdot 10^{-6} \cdot \frac{mho}{mi}$ $\quad Y_{mallard_pu} := Y_{mallard} \cdot Z_{base} \cdot Length2$

$Y_{mallard_pu} = 2.84394$

Rail 954

Townsend - Dubois

$Z_{rail} := (0.0329 + j \cdot 0.569) \cdot \frac{\Omega}{mi}$

$Z_{rail_pu} := \frac{Z_{rail}}{Z_{base}} \cdot Length1$

$Z_{rail_pu} = 0.00245 + 0.04233i$

$Y_{rail} := 7.509 \cdot 10^{-6} \cdot \frac{mho}{mi}$

$Y_{rail_pu} := Y_{rail} \cdot Z_{base} \cdot Length1$

$Y_{rail_pu} = 3.49168$

Dubois - Borah

$Z_{rail} := (0.0329 + j \cdot 0.569) \cdot \frac{\Omega}{mi}$

$Z_{rail_pu} := \frac{Z_{rail}}{Z_{base}} \cdot Length2$

$Z_{rail_pu} = 0.00183 + 0.03164i$

$Y_{rail} := 7.509 \cdot 10^{-6} \cdot \frac{mho}{mi}$

$Y_{rail_pu} := Y_{rail} \cdot Z_{base} \cdot Length2$

$Y_{rail_pu} = 2.60938$

Bittern 1272

Townsend - Dubois

$Z_{bittern} := (0.0252 + j \cdot 0.563) \cdot \frac{\Omega}{mi}$

$Z_{bittern_pu} := \frac{Z_{bittern}}{Z_{base}} \cdot Length1$

$Z_{bittern_pu} = 0.00187 + 0.04189i$

$Y_{bittern} := 7.590 \cdot 10^{-6} \cdot \frac{mho}{mi}$

$Y_{bittern_pu} := Y_{bittern} \cdot Z_{base} \cdot Length1$

$Y_{bittern_pu} = 3.52935$

Dubois - Borah

$Z_{bittern} := (0.0252 + j \cdot 0.563) \cdot \frac{\Omega}{mi}$

$Z_{bittern_pu} := \frac{Z_{bittern}}{Z_{base}} \cdot Length2$

$Z_{bittern_pu} = 0.0014 + 0.0313i$

$Y_{bittern} := 7.590 \cdot 10^{-6} \cdot \frac{mho}{mi}$

$Y_{bittern_pu} := Y_{bittern} \cdot Z_{base} \cdot Length2$

$Y_{bittern_pu} = 2.63752$

Falcon 1590

Townsend - Dubois

$Z_{bittern} := (0.02072 + j \cdot 0.557) \cdot \frac{\Omega}{mi}$

$Z_{bittern_pu} := \frac{Z_{bittern}}{Z_{base}} \cdot Length1$

$Z_{bittern_pu} = 0.00154 + 0.04144i$

$Y_{bittern} := 7.671 \cdot 10^{-6} \cdot \frac{mho}{mi}$

$Y_{bittern_pu} := Y_{bittern} \cdot Z_{base} \cdot Length1$

$Y_{bittern_pu} = 3.56701$

Dubois - Borah

$Z_{bittern} := (0.02072 + j \cdot 0.557) \cdot \frac{\Omega}{mi}$

$Z_{bittern_pu} := \frac{Z_{bittern}}{Z_{base}} \cdot Length2$

$Z_{bittern_pu} = 0.00115 + 0.03097i$

$Y_{bittern} := 7.671 \cdot 10^{-6} \cdot \frac{mho}{mi}$

$Y_{bittern_pu} := Y_{bittern} \cdot Z_{base} \cdot Length2$

$Y_{bittern_pu} = 2.66567$

110860 Townsend - Midpoint Per Unit Calculations 345kV

$MVA := 10^6 W$

$V_{base} := 345kV$

$S_{base} := 100MVA$

$Z_{base} := \frac{V_{base}^2}{S_{base}}$ $\quad Z_{base} = 1190.25\,\Omega$ $\quad Length1 := 186mi$

$Length2 := 139mi$

Bittern 1272

Townsend - Dubois

$Z_{bittern} := (0.037786 + j \cdot 0.57844) \cdot \frac{\Omega}{mi}$ $\quad Z_{bittern_pu} := \frac{Z_{bittern}}{Z_{base}} \cdot Length1$

$Z_{bittern_pu} = 0.0059 + 0.09039i$

$Y_{bittern} := 7.404 \cdot 10^{-6} \cdot \frac{mho}{mi}$ $\quad Y_{bittern_pu} := Y_{bittern} \cdot Z_{base} \cdot Length1$

$Y_{bittern_pu} = 1.63915$

Dubois - Borah

$Z_{bittern} := (0.037786 + j \cdot 0.57844) \cdot \frac{\Omega}{mi}$ $\quad Z_{bittern_pu} := \frac{Z_{bittern}}{Z_{base}} \cdot Length2$

$Z_{bittern_pu} = 0.00441 + 0.06755i$

$Y_{bittern} := 7.404 \cdot 10^{-6} \cdot \frac{mho}{mi}$ $\quad Y_{bittern_pu} := Y_{bittern} \cdot Z_{base} \cdot Length2$

$Y_{bittern_pu} = 1.22495$

110860 Townsend - Midpoint Per Unit Calculations 230kV

$MVA := 10^6 W$

$V_{base} := 230kV$

$S_{base} := 100MVA$

$Z_{base} := \frac{V_{base}^2}{S_{base}}$ $\quad Z_{base} = 529\,\Omega$ $\quad Length1 := 186mi$

$Length2 := 139mi$

Bittern 1272

Mill Creek - Dubois

$Z_{bittern} := (0.037778 + j \cdot 0.60073) \cdot \frac{\Omega}{mi}$ $\quad Z_{bittern_pu} := \frac{Z_{bittern}}{Z_{base}} \cdot Length1$

$Z_{bittern_pu} = 0.01328 + 0.21122i$

$Y_{bittern} := 7.1074 \cdot 10^{-6} \cdot \frac{mho}{mi}$ $\quad Y_{bittern_pu} := Y_{bittern} \cdot Z_{base} \cdot Length1$

$Y_{bittern_pu} = 0.69933$

Dubois - Borah

$Z_{bittern} := (0.037778 + j \cdot 0.60073) \cdot \frac{\Omega}{mi}$ $\quad Z_{bittern_pu} := \frac{Z_{bittern}}{Z_{base}} \cdot Length2$

$Z_{bittern_pu} = 0.00993 + 0.15785i$

$Y_{bittern} := 7.1074 \cdot 10^{-6} \cdot \frac{mho}{mi}$ $\quad Y_{bittern_pu} := Y_{bittern} \cdot Z_{base} \cdot Length2$

$Y_{bittern_pu} = 0.52261$

Chukar 1780

Mill Creek - Dubois

$Z_{bittern} := (0.0189287 + j \cdot 0.499785) \cdot \frac{\Omega}{mi}$ $\quad Z_{bittern_pu} := \frac{Z_{bittern}}{Z_{base}} \cdot Length1$

$Z_{bittern_pu} = 0.00666 + 0.17573i$

$Y_{bittern} := 8.56649 \cdot 10^{-6} \cdot \frac{mho}{mi}$ $\quad Y_{bittern_pu} := Y_{bittern} \cdot Z_{base} \cdot Length1$

$Y_{bittern_pu} = 0.84289$

Dubois - Borah

$Z_{bittern} := (0.0189287 + j \cdot 0.499785) \cdot \frac{\Omega}{mi}$ $\quad Z_{bittern_pu} := \frac{Z_{bittern}}{Z_{base}} \cdot Length2$

$Z_{bittern_pu} = 0.00497 + 0.13132i$

$Y_{bittern} := 8.56649 \cdot 10^{-6} \cdot \frac{mho}{mi}$ $\quad Y_{bittern_pu} := Y_{bittern} \cdot Z_{base} \cdot Length2$

$Y_{bittern_pu} = 0.6299$

Appendix E
500kV Tower Types

EQUIVALENT 500kV TOWER TYPES
1500' SPAN-NESC HEAVY LOADING

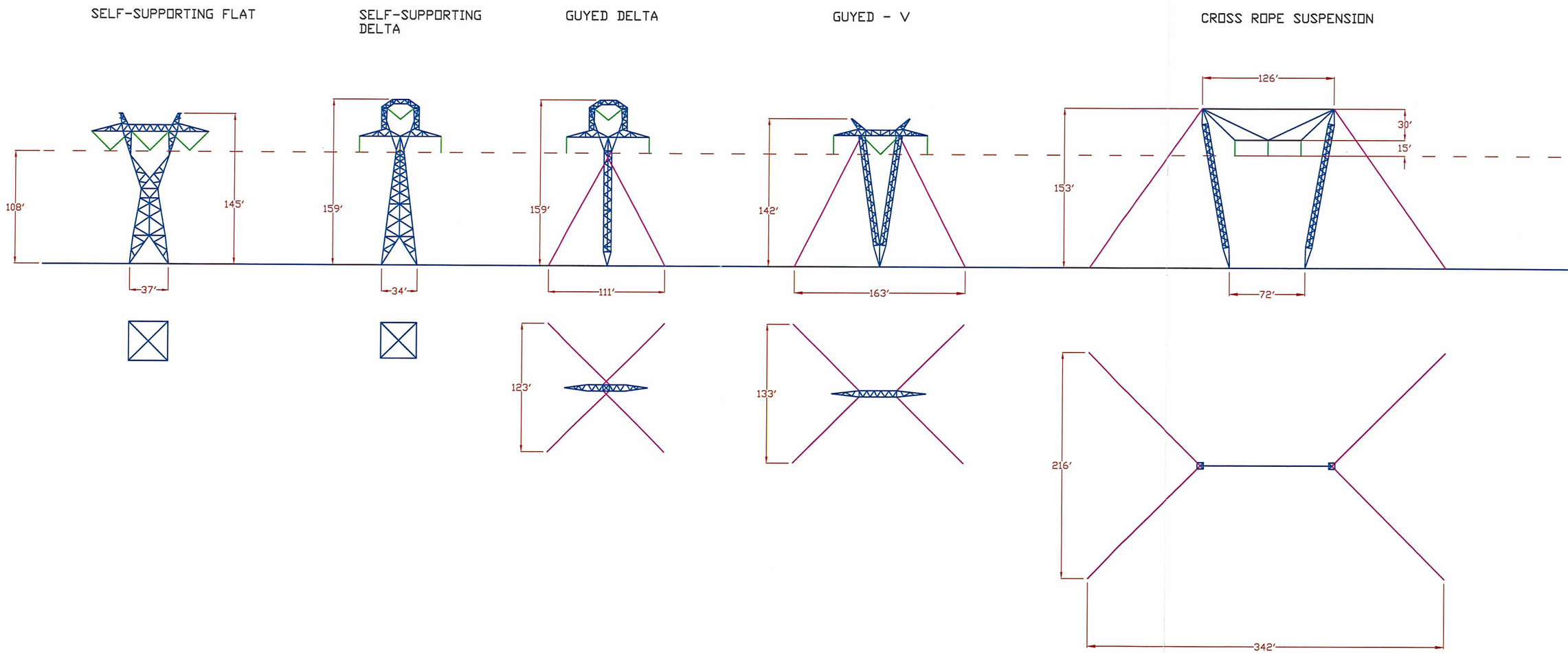

THIS DRAWING WAS PREPARED BY POWER ENGINEERS, INC. FOR A SPECIFIC PROJECT, TAKING INTO CONSIDERATION THE SPECIFIC AND UNIQUE REQUIREMENTS OF THE PROJECT. REUSE OF THIS DRAWING OR ANY INFORMATION CONTAINED IN THIS DRAWING FOR ANY PURPOSE IS PROHIBITED UNLESS WRITTEN PERMISSION FROM BOTH POWER AND POWER'S CLIENT IS GRANTED.

REV	REVISIONS	DATE	DRN	DSGN	CKD	APPD	REFERENCE DRAWINGS
1		11-2-06	RMT	DT			

DSGN
DRN
CKD
SCALE: 1":100'
FOR 11x17 DWG ONLY

POWER ENGINEERS

NORTHWEST ENERGY TOWER STUDIES

* * *

JOB NUMBER 110860

REV

DRAWING NUMBER A0-0

THIS DRAWING WAS PREPARED BY POWER ENGINEERS, INC. FOR A SPECIFIC PROJECT, TAKING INTO CONSIDERATION THE SPECIFIC AND UNIQUE REQUIREMENTS OF THE PROJECT. REUSE OF THIS DRAWING OR ANY INFORMATION CONTAINED IN THIS DRAWING FOR ANY PURPOSE IS PROHIBITED UNLESS WRITTEN PERMISSION FROM BOTH POWER AND POWER'S CLIENT IS GRANTED.

REV	REVISIONS	DATE	DRN	DSGN	CKD	APPD

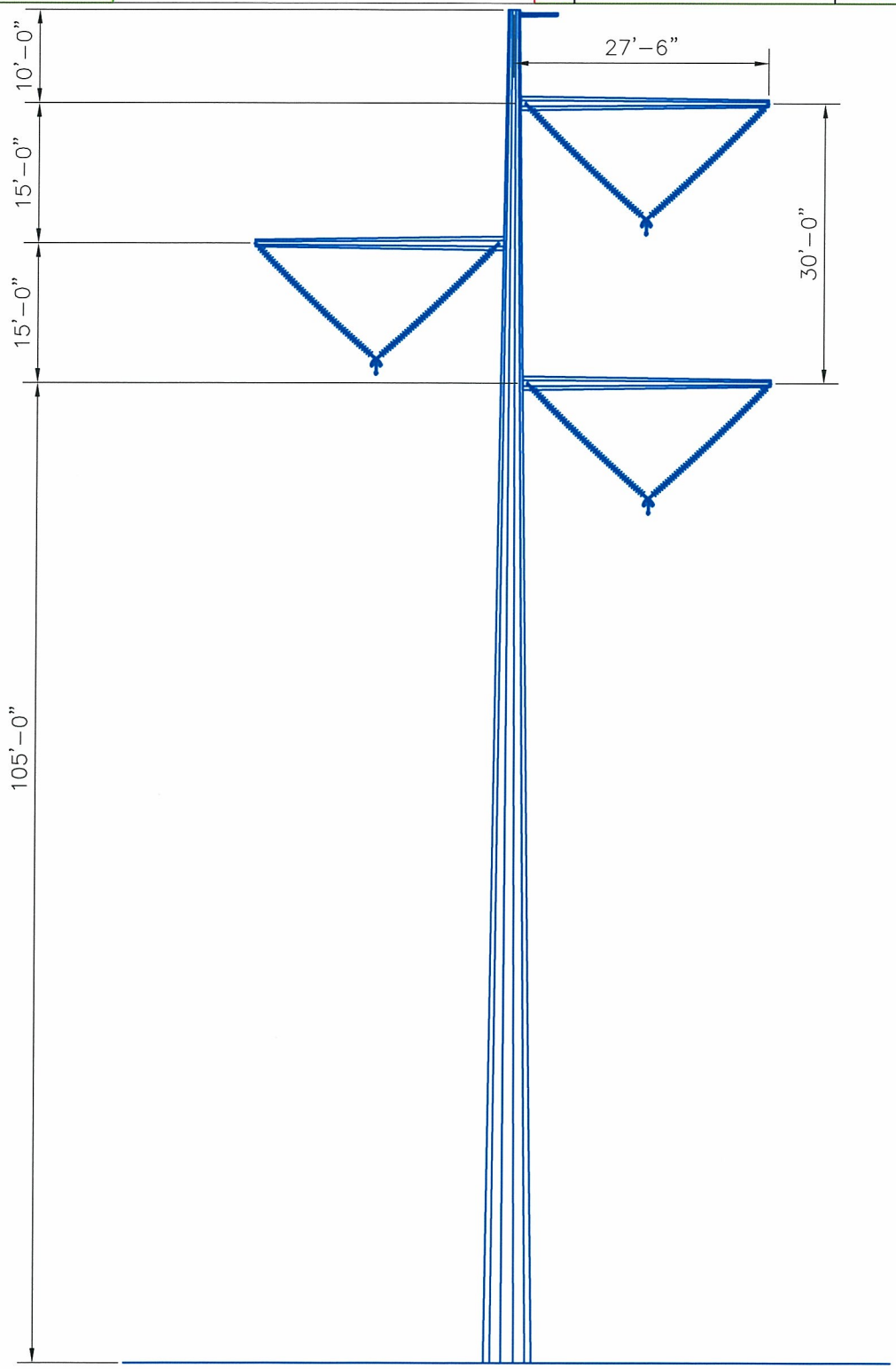

FILE		DSGN	*	*
		DRN	*	*
		CKD	*	*
	*	SCALE:	*	
	REFERENCE DRAWINGS	FOR 8.5x11 DWG ONLY		

POWER ENGINEERS
www.powereng.com

TOWNSEND-MIDPOINT
SPT-145
***
***

JOB NUMBER 110860
REV
DRAWING NUMBER **

THIS DRAWING WAS PREPARED BY POWER ENGINEERS, INC. FOR A SPECIFIC PROJECT, TAKING INTO CONSIDERATION THE SPECIFIC AND UNIQUE REQUIREMENTS OF THE PROJECT. REUSE OF THIS DRAWING OR ANY INFORMATION CONTAINED IN THIS DRAWING FOR ANY PURPOSE IS PROHIBITED UNLESS WRITTEN PERMISSION FROM BOTH POWER AND POWER'S CLIENT IS GRANTED.

REV	REVISIONS	DATE	DRN	DSGN	CKD	APPD

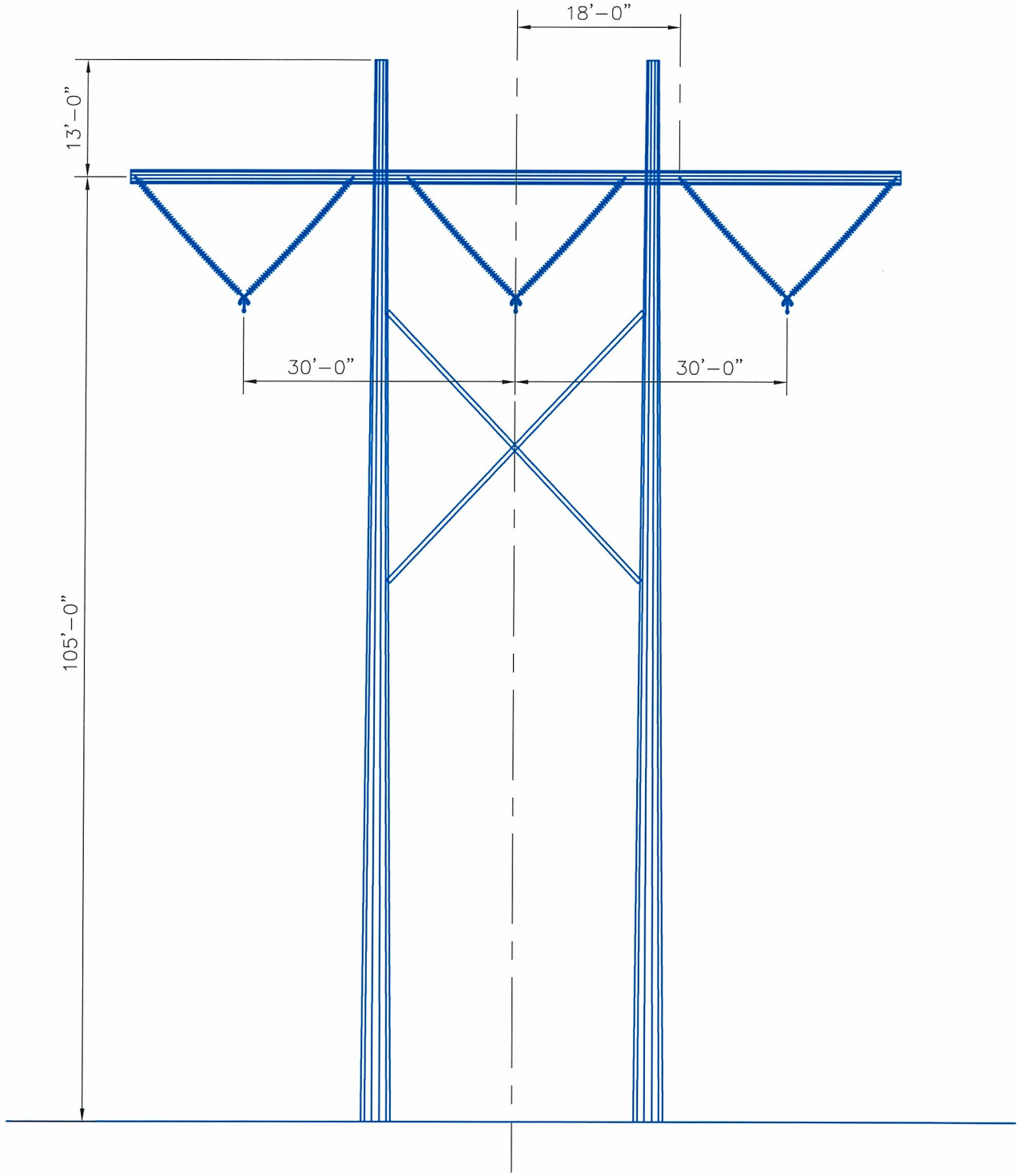

FILE		DSGN	*	*
		DRN	*	*
		CKD	*	*
	*	SCALE:	*	
	REFERENCE DRAWINGS	FOR 8.5x11 DWG ONLY		

POWER ENGINEERS
www.powereng.com

TOWNSEND-MIDPOINT
H FRAME-118

***
***

JOB NUMBER 110860

REV

DRAWING NUMBER **

Appendix F
500kV Tower Configurations for Live Line

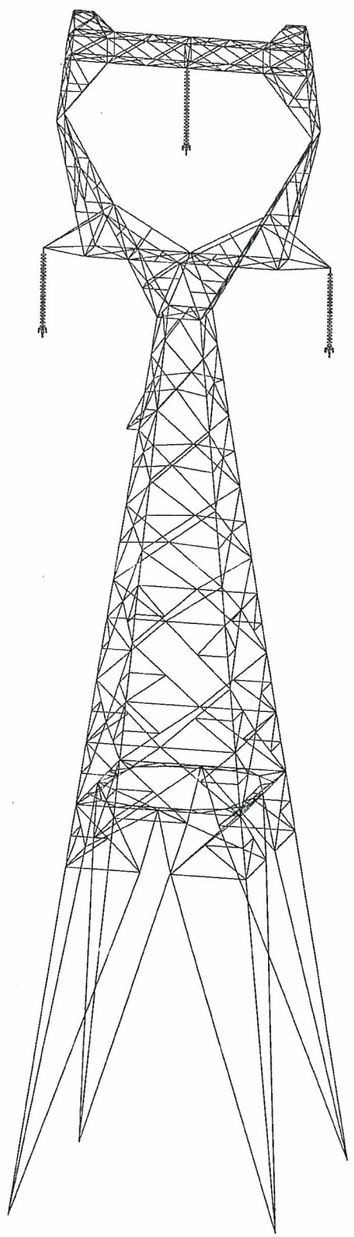

CONDUCTOR

3- ACSR/TW "DESCHUTES" PER PHASE.
RATED TENSILE STRENGTH = 36,400 LBS.
CONSTRAINT TENSIONS:
@ ½ - 8 - 0 In = 17,000 LBS. PER SUBCONDUCTOR
@ 0 - 0 - 30 In = 10,190 LBS. PER SUBCONDUCTOR

GROUND WIRE

½" EXTRA HIGH STRENGTH GALVANIZED STEEL.
RATED STEEL STRENGTH = 26,900 LBS.
CONSTRAINT TENSIONS:
@ ½ - 8 - 0 In = 9,500 LBS.
@ 0 - 0 - 30 In = 5,380 LBS.

OPGW FIBER OPTIC

1- 0.591 OPGW FIBER OPTIC CABLE.
RATED TENSILE STRENGTH = 24,300 LBS.
CONSTRAINT TENSIONS:
@ ½ - 8 - 0 In = 9,500 LBS.
@ 0 - 0 - 30 In = 4,860 LBS.

ADSS FIBER OPTIC

ADSS 72 FIBER CH7 CABLE
RATED TENSILE STRENGTH = 13,000 LBS.
CONSTRAINT TENSIONS:
@ ½ - 8 - 0 In = 7,000 LBS.
@ 0 - 0 - 30 In = 2,600 LBS.

CONDUCTOR CLEARANCE

MAXIMUM SWING AT 6 psf WIND = 38°
MAXIMUM SWING AT 2 psf WIND = 16°
CONDUCTOR SLOPE = 10° UP TO 15° DOWN

BODY / LEG COMBINATIONS

60' BODY WITH 5' TO 40' LEGS IN 2'-6" INCREMENTS
80' BODY WITH 5' TO 50' LEGS IN 2'-6" INCREMENTS
100' BODY WITH 5' TO 50' LEGS IN 2'-6" INCREMENTS

WORKING AND CLIMBING SPACES

CLEARANCE TO STEEL AT 6 psf INSULATOR SWING (38°) = 99"

CLEARANCE TO SURFACE OF WORKING AND CLIMBING SPACES AT 2 psf INSULATOR SWING (16°) = 126"

DESIGN SPANS

THIS TOWER IS DESIGNED FOR A VERTICAL SPAN OF 1600' AND A TRANSVERSE SPAN OF 1150'. THE TOWER WAS CHECKED WITH LOADS CALCULATED BASED ON THE SPANS SHOWN IN THE FOLLOWING CHART. ULTIMATE CONNECTION LOADS SHOWN IN THE MEMBER SIZE TABLE REPRESENT THE MAXIMUM LOAD FOR ALL SPAN COMBINATIONS. A LINE ANGLE OF 0 DEGREES WAS USED FOR ALL SPANS.

TOWER UTILIZATION CAPACITY

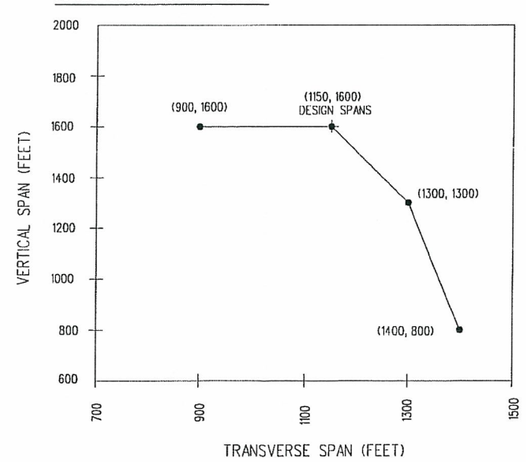

UNIT STRESSES (PSI):

TENSION ON NET SECTION = MINIMUM YIELD STRESS Fy
COMPRESSION ON GROSS SECTION

FOR $KL/r \leq C_c$ $\quad Fa = Fy\left[1 - \frac{1}{2}\left(\frac{KL/r}{C_c}\right)^2\right]$

FOR $KL/r > C_c$ $\quad Fa = \frac{286{,}000{,}000}{\left(\frac{KL}{r}\right)^2}$

WHERE $C_c = \sqrt{\frac{2\pi^2 E}{Fy}}$

$b/t \leq \frac{2500}{\sqrt{Fy}}$

FOR $b/t > \frac{2500}{\sqrt{Fy}}$, SUBSTITUTE F_{cr} FOR Fy IN ABOVE FORMULAS.

$\frac{2500}{\sqrt{Fy}} < b/t \leq \frac{3750}{\sqrt{Fy}}$ $\quad F_{cr} = Fy\left[1.8 - \frac{(b/t)\sqrt{Fy}}{3110}\right]$

$\frac{3750}{\sqrt{Fy}} < b/t \leq 20$ $\quad F_{cr} = \frac{8{,}400{,}000}{\left(\frac{b}{t}\right)^2}$

MAXIMUM L/r OF MEMBERS:

TOWER LEGS = 120
MAIN COMPRESSION MEMBERS IN CROSSARMS AND GROUND WIRE PEAKS = 150
OTHER COMPRESSION MEMBERS = 200
REDUNDANTS = 250
TENSION MEMBERS = 450

MATERIAL:

STRUCTURAL STEEL - ASTM A36. MINIMUM YIELD STRESS Fy = 36,000 PSI

HIGH STRENGTH LOW ALLOY STRUCTURAL STEEL - ASTM A572 GRADE 50.

ALL MEMBERS ARE DESIGNED USING ASTM A36 EXCEPT WHERE NOTED.
MEMBERS MARKED WITH * ARE DESIGNED FOR HSLA STRUCTURAL STEEL ASTM A572 GRADE 50.

MINIMUM SIZE OF MATERIAL
PLATES 3/16"; ANGLES L1¾x1¾x1/8
ALL REDUNDANTS ARE L1¾x1¾x1/8 (EXCEPT AS NOTED)

COATING
HOT DIP GALVANIZED PER ASTM A123. DULLING AS SPECIFIED FOR SPECIFIC PROJECT.
USE OF DICHROMATE AS SPECIFIED FOR SPECIFIC PROJECT.

CONNECTIONS:

HOT DIPPED GALVANIZED BOLTS ARE ⅝" DIAMETER ASTM A325 OR A449 TYPE 1, HEAVY HEX HEAD WITH LOCKNUT. MINIMUM TWO BOLTS PER CONNECTION FOR MEMBERS CARRYING CALCULATED STRESSES. SINGLE BOLT CONNECTIONS MAY BE USED SUBJECT TO BPA APPROVAL.

BEARING, BOLT SHEAR, AND BOLT TENSION ARE TO BE DESIGNED FOLLOWING THE REQUIREMENTS DEFINED IN ASCE 10-97.

NO.	*	W.O. 4340	REVISION	BY	DATE	APPROVED

* C = CONTRACT CONSTRUCTION, FA = FORCE ACCOUNT, R = RECORD

DSGN	D M HESSE
DRWN	D M HESSE
CHKD	E.T. ORTH
REVW	MICHAEL D MILLER
CNCR	GW GREEN
APPR	LEON KEMPNER JR (PRINCIPAL ENGINEER)
DATE	02/24/06

UNITED STATES DEPARTMENT OF ENERGY
BONNEVILLE POWER ADMINISTRATION
HEADQUARTERS, PORTLAND, OREGON

500 KV SINGLE CIRCUIT
TRANSMISSION TOWER
MWT = 51,000 LBS.

TYPE 148M — STRUCTURAL DESIGN

Serial	Source	Size	Sheet	Revision
269911	LFS	A1	1 OF 10	0

TRIM LINE

TRIM LINE

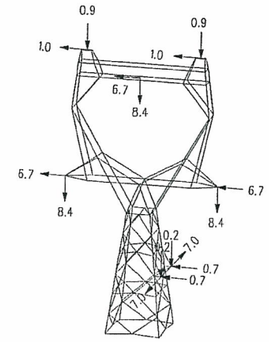

CASE A - 100 MPH WIND ON TOWER
@ 90° TO TRANSVERSE FACE W/ 1.2 GUST FACTOR

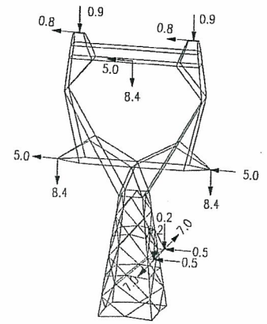

CASE A1 - 100 MPH WIND ON TOWER
@ 60° TO TRANSVERSE FACE W/ 1.2 GUST FACTOR

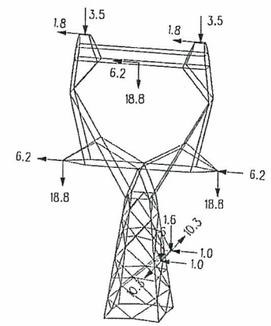

CASE B1 - 40 MPH WIND

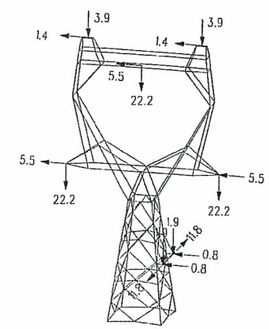

CASE B2 - 56.6 MPH WIND

ULTIMATE DESIGN CONDITIONS

A. HIGH WIND ON BARE CONDUCTOR, 100 MPH WIND IN ANY DIRECTION, SPAN FACTOR = 0.7, TOWER GUST FACTOR = 1.2.

B1. 40.0 MPH TRANSVERSE WIND ON 2" RADIAL RIME ICE (15 PCF).

B2. 56.6 MPH WIND ON 1" RADIAL GLAZE ICE (57 PCF). SPAN FACTOR = 0.7.

C. HEAVY VERTICAL (1½" RADIAL GLAZE ICE). NO WIND.

D. NESC 2002 EDITION MEDIUM LOADING 40 MPH WIND WITH ¼" RADIAL GLAZE ICE AND OVERLOAD FACTORS: 1.5 VERTICAL, 2.5 TRANSVERSE, 1.65 LONGITUDINAL.

E. BROKEN CONDUCTOR, NO ICE, NO WIND. IMPACT FACTOR = 0.67

G. UNBALANCED ICE ON OVERHEAD GROUNDWIRE AND ADSS FIBER. NO WIND.

PROJECTED WIND AREA IS EQUAL TO ½ TIMES THE PROJECTED AREA OF ONE FACE OF THE TOWER EXCEPT CASE D.

FOR ROUND (APPROXIMATE ROUND) SURFACES:
$P = 0.00256 \times V_s^2$

FOR FLAT SURFACES:
$P = 0.004 \times V_s^2$

LINE ANGLE = 0°

DESIGN SPANS: (SEE NOTE ON SHEET 1)
V SPAN: 1600 FT.
T SPAN: 1150 FT.

LOAD CASES

A DESIGN CONDITION A ALL WIRES INTACT.
A1 DESIGN CONDITION A ALL WIRES INTACT, 60° WIND TO LINE.
B1 DESIGN CONDITION B1 ALL WIRES INTACT.
B2 DESIGN CONDITION B2 ALL WIRES INTACT.
C DESIGN CONDITION C ALL WIRES INTACT.
D DESIGN CONDITION D ALL WIRES INTACT.
E1 DESIGN CONDITION E MIDDLE PHASE BROKEN.
E2 DESIGN CONDITION E OUTSIDE PHASE BROKEN.
G1 DESIGN CONDITION G BOTH GW AND ADSS WITH UNBALANCED ICE.
R RIGGING LOADS.

ADSS FIBER LOADS SHALL BE REPEATED IN ALL POSITIONS.

FOR ULTIMATE STRENGTH DESIGN, THE TOWER SHALL BE DESIGNED TO WITHSTAND THE DESIGN LOADS SHOWN WITH A FACTOR OF SAFETY EQUAL TO 1.0, UNLESS OTHERWISE SPECIFIED.
ALL LOADS IN KIPS.

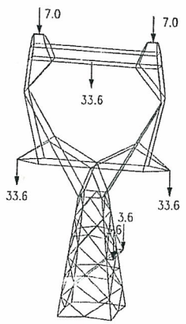

CASE C - NO WIND

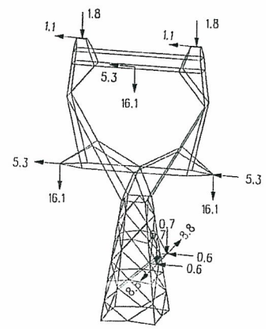

CASE D - 40 MPH WIND W/ OVERLOAD FACTORS

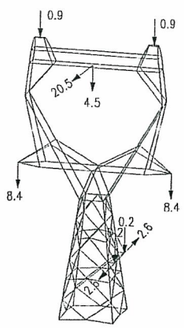

CASE E1 - NO WIND

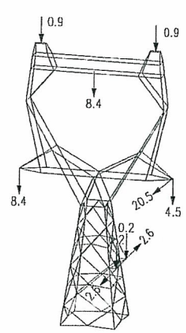

CASE E2 - NO WIND

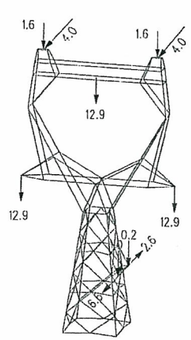

CASE G1 - NO WIND

DANGER:
DO NOT CROSS UNDER
CONDUCTOR WHEN
LINE IS ENERGIZED

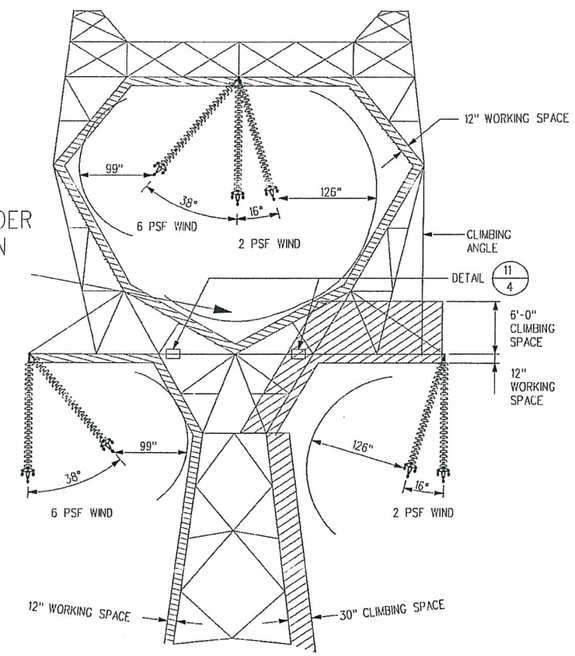

CLEARANCE TO STEEL AT 6 psf INSULATOR SWING (38°) = 99"

CLEARANCE TO SURFACE OF WORKING AND CLIMBING SPACES AT 2 psf INSULATOR SWING (16°) = 126"

WORKING AND CLIMBING SPACES

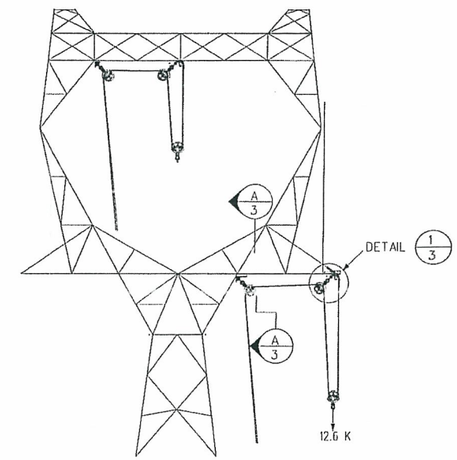

TYPICAL RIGGING LAYOUT
GENERAL LOCATION AND LAYOUT

CASE R - NO WIND

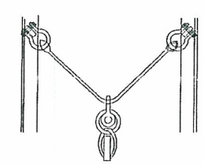

VIEW A/3 A/3

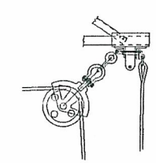

DETAIL 1/3

NO.	*	W.O. 4340	REVISION	BY	DATE	APPROVED

* C - CONTRACT CONSTRUCTION, FA - FORCE ACCOUNT, R - RECORD

DSGN	DMH/MDM
DRWN	D M HESSE
CHKD	E.T. ORTH
REVW	MICHAEL D MILLER
CNCR	GW GREEN
APPR	LEON KEMPNER JR (PRINCIPAL ENGINEER)
DATE	02/24/06

UNITED STATES DEPARTMENT OF ENERGY
BONNEVILLE POWER ADMINISTRATION
HEADQUARTERS, PORTLAND, OREGON

500KV SINGLE CIRCUIT
TRANSMISSION TOWER
TRIPLE BUNDLE "DESCHUTES"

TYPE 148M — DESIGN CRITERIA

Serial	Source	Size	Sheet	Revision
269911	LFS	A1	3	0

TRIM LINE

TRIM LINE

Appendix G
Line Estimates

NORTHWESTERN ENERGY
MILL CREEK to BORAH 230kV TRANSMISSION LINE PROJECT
LINE SUMMARY COST ESTIMATE
268 Miles Construction
Prepared by POWER Engineers, Inc.

Date: 9/11/2006
Rev. 0

ITEM	ITEMIZED COSTS	COST PER MILE
Conductor Hardware and Insulators: Material	$3,561,903	$13,291
Conductor Wire: Material	$29,588,486	$110,405
Conductor Sleeves: Material	$72,000	$269
Install Conductor, Hardware and Insulators: Labor	$24,769,569	$92,424
Shield Wire Hardware: Material	$163,437	$610
Shield Wire: Material	$435,125	$1,624
Install Shield Wire and Hardware: Labor	$3,074,251	$11,471
OPGW Hardware & Misc: Material	$300,554	$1,121
OPGW Splice Encosures and Misc: Material	$140,254	$523
OPGW Wire: Material	$1,835,130	$6,848
Install OPGW Wire: Labor	$4,713,851	$17,589
Splice OPGW Wire: Labor	$227,760	$850
Steel Pole Structure: Material	$41,849,808	$156,156
Haul, Assemble and Erect Steel Pole Structures: Labor	$14,749,669	$55,036
Auger Structure Holes: Labor	$5,641,093	$21,049
Structure Grounding: Material	$103,758	$387
Guy and Anchor: Material	$567,077	$2,116
Guy and Anchor: Labor	$663,155	$2,474
Maintain Existing Roads: Labor	$88,528	$330
Build Access Roads: Labor	$1,257,290	$4,691
Crossing Guard Structures: Labor	$619,522	$2,312
Survey Access Roads / Crossing / Str Locations: Labor	$435,231	$1,624
Mobilization / Demobilization: Labor	$500,000	$1,866
SUB TOTAL >>>>>	$135,357,452	$505,065
Miles = 268		
Steel Structures = 1,415		
Engineering	$2,707,149	$10,101
Field Office / Mgmt	$3,383,936	$12,627
Aerial Photogrametry / Legal Survey	$804,000	$3,000
Contingency 0.200	$27,071,490	$101,013
SUB TOTAL >>>>>	$33,966,576	$126,741
TOTALS >>>>>>>	$169,324,028	$631,806

ASSUMPTIONS
1,415 SC DIRECT EMBED TANGENT AND LIGHT ANGLE STEEL POLE H FRAME STRUCTURES AND GUYED 3 POLE STRUCTURES = 1245-TAN, 35-LA, 35-MA, 28-HA, 35-LDE, 35-HDE
STEEL POLE PRICE @ $1.75 PER POUND (from previous project)
1272 kcmil ACSR "BITTERN" @ $3.40 PER FOOT - VERTICAL DOUBLE BUNDLE (pricing from plant)
PORCELAIN INSULATORS (pricing from plant)
CONDUCTOR AND EHS SUSPENSION CLAMPS W/ARMOR ROD AND DAMPERS (pricing from previous projects)
1 - 48 COUNT OPGW @ 1.20 PER FOOT (pricing from distributor)
1 - 3/8" EHS SHIELD WIRE @ 0.30 PER FOOT (pricing from plant)
1,000' AVERAGE SPAN
GRADE AND MAINTAIN APPROX 67 MILES OF ROADS DURING CONSTRUCTION
INSTALL AND REMOVE GUARD STRUCTURES FOR CROSSING FREEWAYS, STATE HIGHWAYS, SECONDARY ROADS, GRAVEL ROADS, RAILROADS, LINE CROSSINGS - APPROX 150 PLACES
CONTAIMENT STRUCTURES APPROX EVERY 5 MILES
*TERRAIN: 62% FLAT - ROLLING; 22% ROUGH; 26% STEEP

*** Percentages used for terrain were derived from topo mapping and preliminary routing studies depicting typical terrain in 3 categories; 1) flat to rolling land less than 8% slope; 2) rolling to rough land with slope of 12 - 20%; and 3) rough to steep land with slope greater than 20%.**

NORTHWESTERN ENERGY

TOWNSEND to BORAH 345kV TRANSMISSION LINE PROJECT

LINE SUMMARY COST ESTIMATE

302 Miles Construction

Prepared by POWER Engineers, Inc.

Date: 9/11/2006
Rev. 0

ITEM	ITEMIZED COSTS	COST PER MILE
Conductor Hardware and Insulators: Material	$6,791,936	$22,490
Conductor Wire: Material	$34,813,231	$115,276
Conductor Sleeves: Material	$138,750	$459
Install Conductor, Hardware and Insulators: Labor	$27,545,007	$91,209
Shield Wire Hardware: Material	$157,493	$522
Shield Wire: Material	$588,393	$1,948
Install Shield Wire and Hardware: Labor	$3,418,722	$11,320
OPGW Hardware & Misc: Material	$270,799	$897
OPGW Splice Encosures and Misc: Material	$157,818	$523
OPGW Wire: Material	$2,067,945	$6,848
Install OPGW Wire: Labor	$5,242,040	$17,358
Splice OPGW Wire: Labor	$272,040	$901
Lattice Structure: Material	$36,351,982	$120,371
Haul, Assemble and Erect Lattice Structures: Labor	$52,922,791	$175,241
Auger and Install Foundations: Labor	$55,718,976	$184,500
Install Concrete Foundations: Material	$5,703,075	$18,884
Structure Grounding: Material	$49,063	$162
Maintain Existing Roads: Labor	$99,758	$330
Build Access Roads: Labor	$1,368,620	$4,532
Crossing Guard Structures: Labor	$591,652	$1,959
Survey Access Roads / Crossings / Str Locations: Labor	$621,127	$2,057
Mobilization / Demobilization: Labor	$500,000	$1,656
SUB TOTAL >>>>>	**$235,391,218**	**$779,441**
Miles = 302		
Steel Structures = 1,227		
Engineering	$3,530,868	$11,692
Field Office / Mgmt	$3,766,259	$12,471
Aerial Photgrametry / Legal Survey	$906,000	$3,000
Contingency 0.200	$47,078,244	$155,888
SUB TOTAL >>>>>	**$55,281,371**	**$183,051**
TOTALS >>>>>>>	**$290,672,590**	**$962,492**

ASSUMPTIONS
1,227 SC LATTICE STEEL STRUCTURES = 1055-TAN, 31-LA, 25-MA, 31-HA, 86-HDE
LATTICE STEEL PRICE @ $1.10 PER POUND (from distributor)
1272 kcmil ACSR "BITTERN" @ $3.55 PER FOOT - VERTICAL DOUBLE BUNDLE (pricing from plant)
PORCELAIN INSULATORS (pricing from plant)
CONDUCTOR AND EHS SUSPENSION CLAMPS W/ARMOR ROD AND DAMPERS (pricing from previous projects)
48 COUNT OPGW @ 1.20 PER FOOT (pricing from distributor)
1/2" EHS SHIELD WIRE @ 0.36 PER FOOT (pricing from plant)
1,300' AVERAGE SPAN
GRADE AND MAINTAIN APPROX 75 MILES OF ROADS DURING CONSTRUCTION
INSTALL AND REMOVE GUARD STRUCTURES FOR CROSSING FREEWAYS, STATE HIGHWAYS, SECONDARY ROADS, GRAVEL ROADS, RAILROADS, LINE CROSSINGS - APPROX 150 PLACES
CONTAINMENT STRUCTURES APPROX EVERY 5 MILES
*TERRAIN: 56% FLAT - ROLLING; 18% ROUGH; 26% STEEP

*** Percentages used for terrain were derived from topo mapping and preliminary routing studies depicting typical terrain in 3 categories; 1) flat to rolling land less than 8% slope; 2) rolling to rough land with slope of 12 - 20%; and 3) rough to steep land with slope greater than 20%.**

NORTHWESTERN ENERGY

TOWNSEND - BORAH 500kV TRANSMISSION LINE PROJECT

LINE SUMMARY COST ESTIMATE

302 Miles Construction *(954 ACSR)*

Prepared by POWER Engineers, Inc.

Date: 11/3/2006
Rev. 0

ITEM	ITEMIZED COSTS	COST PER MILE
Conductor Hardware and Insulators: Material	$9,198,049	$30,457
Conductor Wire: Material	$40,010,700	$132,486
Conductor Sleeves and Bundle Spacers: Material	$1,950,574	$6,459
Install Conductor, Hardware and Insulators: Labor	$36,866,032	$122,073
Shield Wire Hardware: Material	$147,611	$489
Shield Wire: Material	$588,393	$1,948
Shield Wire Sleeves: Material	$7,087	$23
Install Shield Wire and Hardware: Labor	$3,584,865	$11,870
OPGW Hardware & Misc: Material	$250,118	$828
OPGW Splice Encosures and Misc: Material	$157,818	$523
OPGW Wire: Material	$2,067,945	$6,848
Install OPGW Wire: Labor	$5,496,793	$18,201
Splice OPGW Wire: Labor	$272,040	$901
Lattice Structure: Material	$55,456,661	$183,631
Haul, Assemble and Erect Lattice Structures: Labor	$71,922,038	$238,152
Auger and Install Foundations: Labor	$58,665,572	$194,257
Install Concrete Foundations: Material	$5,196,493	$17,207
Structure Grounding: Material	$113,897	$377
Maintain Existing Roads: Labor	$149,636	$495
Build Access Roads: Labor	$2,880,652	$9,539
Crossing Guard Structures: Labor	$591,652	$1,959
Survey Access Roads / Crossings / Str Locations: Labor	$627,363	$2,077
Mobilization / Demobilization: Labor	$500,000	$1,656
SUB TOTAL >>>>>	**$296,701,987**	**$982,457**
Miles = 302		
Steel Structures = 1,139		
Engineering 0.0137	$4,064,817	$13,460
Field Office / Mgmt 0.014	$4,153,828	$13,754
Aerial Photogrametry / Survey	$906,000	$3,000
Contingency 0.20	$59,340,397	$196,491
SUB TOTAL >>>>>	**$68,465,042**	**$226,705**
TOTALS >>>>>>>	**$365,167,030**	**$1,209,162**

ASSUMPTIONS
1,139 SC LATTICE STEEL STRUCTURES = 967-TAN, 80-LA-MA-HA, 92-LDE-HDE
LATTICE STEEL PRICE @ $1.10 PER POUND (pricing from distributor)
954 kcmil ACSR "RAIL" @ $2.72 PER FOOT - TRIPLE BUNDLE (pricing from plant)
PORCELAIN INSULATORS (pricing from plant)
CONDUCTOR AND EHS SUSP CLAMPS W/ARMOR ROD AND SPACER DAMPERS (pricing from previous projects)
48 COUNT OPGW @ 1.20 PER FOOT (pricing from distributor)
1/2" EHS SHIELD WIRE @ 0.36 PER FOOT (pricing from plant)
1,400' AVERAGE SPAN
GRADE AND MAINTAIN APPROX 75 MILES OF ROADS DURING CONSTRUCTION
INSTALL AND REMOVE GUARD STRUCTURES FOR CROSSING FREEWAYS, STATE HIGHWAYS, SECONDARY ROADS, GRAVEL ROADS, RAILROADS, LINE CROSSINGS - APPROX 150 PLACES
CONTAINMENT STRUCTURES APPROX EVERY 5 MILES
*TERRAIN: 33% FLAT - ROLLING; 18% ROUGH; 26 % STEEP; 23 % LAVA ROCK

*** Percentages used for terrain were derived from topo mapping and preliminary routing studies depicting typical terrain in 3 categories; 1) flat to rolling land less than 8% slope; 2) rolling to rough land with slope of 12 - 20%; and 3) rough to steep land with slope greater than 20%.**

NORTHWESTERN ENERGY

TOWNSEND - BORAH 500kV TRANSMISSION LINE PROJECT

LINE SUMMARY COST ESTIMATE

302 Miles Construction *(1272 ACSR)*

Prepared by POWER Engineers, Inc.

Date: 11/3/2006
Rev. 0

ITEM	ITEMIZED COSTS	COST PER MILE
Conductor Hardware and Insulators: Material	$9,427,665	$31,217
Conductor Wire: Material	$52,219,847	$172,913
Conductor Sleeves and Bundle Spacers: Material	$2,014,356	$6,670
Install Conductor, Hardware and Insulators: Labor	$40,552,635	$134,280
Shield Wire Hardware: Material	$147,611	$489
Shield Wire: Material	$588,393	$1,948
Shield Wire Sleeves: Material	$7,087	$23
Install Shield Wire and Hardware: Labor	$3,584,865	$11,870
OPGW Hardware & Misc: Material	$250,118	$828
OPGW Splice Encosures and Misc: Material	$157,818	$523
OPGW Wire: Material	$2,067,945	$6,848
Install OPGW Wire: Labor	$5,496,793	$18,201
Splice OPGW Wire: Labor	$272,040	$901
Lattice Structure: Material	$58,577,870	$193,966
Haul, Assemble and Erect Lattice Structures: Labor	$71,922,038	$238,152
Auger and Install Foundations: Labor	$59,736,755	$197,804
Install Concrete Foundations: Material	$5,652,711	$18,718
Structure Grounding: Material	$113,897	$377
Maintain Existing Roads: Labor	$149,636	$495
Build Access Roads: Labor	$2,880,652	$9,539
Crossing Guard Structures: Labor	$591,652	$1,959
Survey Access Roads / Crossings / Str Locations: Labor	$627,363	$2,077
Mobilization / Demobilization: Labor	$500,000	$1,656
SUB TOTAL >>>>>	**$317,539,747**	**$1,051,456**
Miles = 302		
Steel Structures = 1,139		
Engineering 0.0137	$4,350,295	$14,405
Field Office / Mgmt 0.014	$4,445,556	$14,720
Aerial Photogrametry / Survey	$906,000	$3,000
Contingency 0.20	$63,507,949	$210,291
SUB TOTAL >>>>>	**$73,209,800**	**$242,417**
TOTALS >>>>>>>	**$390,749,547**	**$1,293,873**

ASSUMPTIONS
1,139 SC LATTICE STEEL STRUCTURES = 967-TAN, 80-LA-MA-HA, 92-LDE-HDE
LATTICE STEEL PRICE @ $1.10 PER POUND (pricing from distributor)
1272 kcmil ACSR "BITTERN" @ $3.55 PER FOOT - TRIPLE BUNDLE (pricing from plant)
PORCELAIN INSULATORS (pricing from plant)
CONDUCTOR AND EHS SUSP CLAMPS W/ARMOR ROD AND SPACER DAMPERS (pricing from previous projects)
48 COUNT OPGW @ 1.20 PER FOOT (pricing from distributor)
1/2" EHS SHIELD WIRE @ 0.36 PER FOOT (pricing from plant)
1,400' AVERAGE SPAN
GRADE AND MAINTAIN APPROX 75 MILES OF ROADS DURING CONSTRUCTION
INSTALL AND REMOVE GUARD STRUCTURES FOR CROSSING FREEWAYS, STATE HIGHWAYS, SECONDARY ROADS, GRAVEL ROADS, RAILROADS, LINE CROSSINGS - APPROX 150 PLACES
CONTAINMENT STRUCTURES APPROX EVERY 5 MILES
*TERRAIN: 33% FLAT - ROLLING; 18% ROUGH; 26 % STEEP; 23 % LAVA ROCK

*** Percentages used for terrain were derived from topo mapping and preliminary routing studies depicting typical terrain in 3 categories; 1) flat to rolling land less than 8% slope; 2) rolling to rough land with slope of 12 - 20%; and 3) rough to steep land with slope greater than 20%.**

NORTHWESTERN ENERGY

TOWNSEND - BORAH 500kV TRANSMISSION LINE PROJECT

LINE SUMMARY COST ESTIMATE

302 Miles Construction *(1590 ACSR)*

Prepared by POWER Engineers, Inc.

Date: 11/3/2006
Rev. 0

ITEM	ITEMIZED COSTS	COST PER MILE
Conductor Hardware and Insulators: Material	$9,427,665	$31,217
Conductor Wire: Material	$64,723,190	$214,315
Conductor Sleeves and Bundle Spacers: Material	$2,054,220	$6,802
Install Conductor, Hardware and Insulators: Labor	$40,552,635	$134,280
Shield Wire Hardware: Material	$147,611	$489
Shield Wire: Material	$588,393	$1,948
Shield Wire Sleeves: Material	$7,087	$23
Install Shield Wire and Hardware: Labor	$3,584,865	$11,870
OPGW Hardware & Misc: Material	$250,118	$828
OPGW Splice Encosures and Misc: Material	$157,818	$523
OPGW Wire: Material	$2,067,945	$6,848
Install OPGW Wire: Labor	$5,496,793	$18,201
Splice OPGW Wire: Labor	$272,040	$901
Lattice Structure: Material	$63,426,471	$210,021
Haul, Assemble and Erect Lattice Structures: Labor	$71,922,038	$238,152
Auger and Install Foundations: Labor	$62,463,568	$206,833
Install Concrete Foundations: Material	$8,490,957	$28,116
Structure Grounding: Material	$113,897	$377
Maintain Existing Roads: Labor	$149,636	$495
Build Access Roads: Labor	$2,880,652	$9,539
Crossing Guard Structures: Labor	$591,652	$1,959
Survey Access Roads / Crossings / Str Locations: Labor	$627,363	$2,077
Mobilization / Demobilization: Labor	$500,000	$1,656
SUB TOTAL >>>>>	**$340,496,614**	**$1,127,472**
Miles = 302		
Steel Structures = 1,139		
Engineering 0.0137	$4,664,804	$15,446
Field Office / Mgmt 0.014	$4,766,953	$15,785
Aerial Photogrametry / Survey	$906,000	$3,000
Contingency 0.20	$68,099,323	$225,494
SUB TOTAL >>>>>	**$78,437,079**	**$259,725**
TOTALS >>>>>>>	**$418,933,693**	**$1,387,198**

ASSUMPTIONS
1,139 SC LATTICE STEEL STRUCTURES = 967-TAN, 80-LA-MA-HA, 92-LDE-HDE
LATTICE STEEL PRICE @ $1.10 PER POUND (pricing from distributor)
1590 kcmil ACSR "LAPWING" @ $4.40 PER FOOT - TRIPLE BUNDLE (pricing from plant)
PORCELAIN INSULATORS (pricing from plant)
CONDUCTOR AND EHS SUSP CLAMPS W/ARMOR ROD AND SPACER DAMPERS (pricing from previous projects)
48 COUNT OPGW @ 1.20 PER FOOT (pricing from distributor)
1/2" EHS SHIELD WIRE @ 0.36 PER FOOT (pricing from plant)
1,400' AVERAGE SPAN
GRADE AND MAINTAIN APPROX 75 MILES OF ROADS DURING CONSTRUCTION
INSTALL AND REMOVE GUARD STRUCTURES FOR CROSSING FREEWAYS, STATE HIGHWAYS, SECONDARY ROADS, GRAVEL ROADS, RAILROADS, LINE CROSSINGS - APPROX 150 PLACES
CONTAINMENT STRUCTURES APPROX EVERY 5 MILES
*TERRAIN: 33% FLAT - ROLLING; 18% ROUGH; 26 % STEEP; 23 % LAVA ROCK

*** Percentages used for terrain were derived from topo mapping and preliminary routing studies depicting typical terrain in 3 categories; 1) flat to rolling land less than 8% slope; 2) rolling to rough land with slope of 12 - 20%; and 3) rough to steep land with slope greater than 20%.**

NORTHWESTERN ENERGY

TOWNSEND - BORAH 500kV TRANSMISSION LINE PROJECT

LINE SUMMARY COST ESTIMATE

302 Miles Construction *(1590 ACSR - 25% Guyed Structures)*

Prepared by POWER Engineers, Inc.

Date: 11/3/2006
Rev. 0

ITEM	ITEMIZED COSTS	COST PER MILE
Conductor Hardware and Insulators: Material	$7,515,218	$24,885
Conductor Wire: Material	$64,723,190	$214,315
Conductor Sleeves and Bundle Spacers: Material	$2,061,307	$6,826
Install Conductor, Hardware and Insulators: Labor	$40,372,233	$133,683
Shield Wire Hardware: Material	$147,611	$489
Shield Wire: Material	$588,393	$1,948
Shield Wire Sleeves: Material	$7,087	$23
Install Shield Wire and Hardware: Labor	$3,568,917	$11,818
OPGW Hardware & Misc: Material	$415,041	$1,374
OPGW Wire: Material	$2,067,945	$6,848
Install OPGW Wire: Labor	$5,472,340	$18,120
Splice OPGW Wire: Labor	$272,040	$901
Lattice Structure: Material	$53,434,907	$176,937
Haul, Assemble and Erect Lattice Structures: Labor	$65,909,365	$218,243
Auger and Install Foundations: Labor	$67,389,914	$223,145
Install Concrete Foundations: Material	$7,666,297	$25,385
Guys and Anchors for Guyed Type Strs: Material	$2,277,943	$7,543
Install Guys and Anchors: Labor	$4,897,672	$16,217
Structure Grounding: Material	$109,931	$364
Maintain Existing Roads: Labor	$149,636	$495
Build Access Roads: Labor	$2,877,463	$9,528
Crossing Guard Structures: Labor	$591,652	$1,959
Survey Access Roads / Crossings / Str Locations: Labor	$626,883	$2,076
Mobilization / Demobilization: Labor	$500,000	$1,656
SUB TOTAL >>>>>	**$331,581,678**	**$1,097,953**
Miles = 302		
Steel Structures = 1,139		
Engineering 0.0137	$4,542,669	$15,042
Field Office / Mgmt 0.014	$4,642,143	$15,371
Aerial Photogrametry / Survey	$906,000	$3,000
Contingency 0.20	$66,316,336	$20
SUB TOTAL >>>>>	**$76,407,148**	**$33,433**
TOTALS >>>>>>>	**$407,988,826**	**$1,350,956**

ASSUMPTIONS
1,139 SC LATTICE STEEL STRUCTURES = 683-TAN, 285-TAN GUYED, 80-LA-MA-HA, 92-LDE-HDE
LATTICE STEEL PRICE @ $1.10 PER POUND (pricing from distributor)
1590 kcmil ACSR "LAPWING" @ $4.40 PER FOOT - TRIPLE BUNDLE (pricing from plant)
PORCELAIN INSULATORS (pricing from plant)
CONDUCTOR AND EHS SUSP CLAMPS W/ARMOR ROD AND SPACER DAMPERS (pricing from previous projects)
48 COUNT OPGW @ 1.20 PER FOOT (pricing from distributor)
1/2" EHS SHIELD WIRE @ 0.36 PER FOOT (pricing from plant)
1,400' AVERAGE SPAN
GRADE AND MAINTAIN APPROX 75 MILES OF ROADS DURING CONSTRUCTION
INSTALL AND REMOVE GUARD STRUCTURES FOR CROSSING FREEWAYS, STATE HIGHWAYS, SECONDARY ROADS, GRAVEL ROADS, RAILROADS, LINE CROSSINGS - APPROX 150 PLACES
CONTAINMENT STRUCTURES APPROX EVERY 5 MILES
*TERRAIN: 33% FLAT - ROLLING; 18% ROUGH; 26 % STEEP; 23 % LAVA ROCK
* Percentages used for terrain were derived from topo mapping and preliminary routing studies depicting typical terrain in 3 categories; 1) flat to rolling land less than 8% slope; 2) rolling to rough land with slope of 12 - 20%; and 3) rough to steep land with slope greater than 20%.

NORTHWESTERN ENERGY
TOWNSEND - BORAH 500kV TRANSMISSION LINE PROJECT
LINE SUMMARY COST ESTIMATE
302 Miles Construction *(795 ACSR)*
Prepared by POWER Engineers, Inc.

Date: 11/3/2006
Rev. 0

ITEM	ITEMIZED COSTS	COST PER MILE
Conductor Hardware and Insulators: Material	$9,985,562	$33,065
Conductor Wire: Material	$60,408,311	$200,028
Conductor Sleeves and Bundle Spacers: Material	$2,034,288	$6,736
Install Conductor, Hardware and Insulators: Labor	$48,662,145	$161,133
Shield Wire Hardware: Material	$147,611	$489
Shield Wire: Material	$588,393	$1,948
Shield Wire Sleeves: Material	$7,087	$23
Install Shield Wire and Hardware: Labor	$3,584,865	$11,870
OPGW Hardware & Misc: Material	$250,118	$828
OPGW Splice Encosures and Misc: Material	$157,818	$523
OPGW Wire: Material	$2,067,945	$6,848
Install OPGW Wire: Labor	$5,496,793	$18,201
Splice OPGW Wire: Labor	$272,040	$901
Lattice Structure: Material	$60,101,671	$199,012
Haul, Assemble and Erect Lattice Structures: Labor	$71,922,038	$238,152
Auger and Install Foundations: Labor	$60,870,449	$201,558
Install Concrete Foundations: Material	$7,509,565	$24,866
Structure Grounding: Material	$113,897	$377
Maintain Existing Roads: Labor	$149,636	$495
Build Access Roads: Labor	$2,880,652	$9,539
Crossing Guard Structures: Labor	$591,652	$1,959
Survey Access Roads / Crossings / Str Locations: Labor	$627,363	$2,077
Mobilization / Demobilization: Labor	$500,000	$1,656
SUB TOTAL >>>>>	**$338,929,899**	**$1,122,284**
Miles = 302		
Steel Structures = 1,139		
Engineering 0.0137	$4,643,340	$15,375
Field Office / Mgmt 0.014	$4,745,019	$15,712
Aerial Photogrametry / Survey	$906,000	$3,000
Contingency 0.20	$67,785,980	$224,457
SUB TOTAL >>>>>	**$78,080,338**	**$258,544**
TOTALS >>>>>>>	**$417,010,237**	**$1,380,829**

ASSUMPTIONS
1,139 SC LATTICE STEEL STRUCTURES = 967-TAN, 80-LA-MA-HA, 92-LDE-HDE
LATTICE STEEL PRICE @ $1.10 PER POUND (pricing from distributor)
795 kcmil ACSR "MALLARD" @ $3.08 PER FOOT - FOUR BUNDLE (pricing from plant)
PORCELAIN INSULATORS (pricing from plant)
CONDUCTOR AND EHS SUSP CLAMPS W/ARMOR ROD AND SPACER DAMPERS (pricing from previous projects)
48 COUNT OPGW @ 1.20 PER FOOT (pricing from distributor)
1/2" EHS SHIELD WIRE @ 0.36 PER FOOT (pricing from plant)
1,400' AVERAGE SPAN
GRADE AND MAINTAIN APPROX 75 MILES OF ROADS DURING CONSTRUCTION
INSTALL AND REMOVE GUARD STRUCTURES FOR CROSSING FREEWAYS, STATE HIGHWAYS, SECONDARY ROADS, GRAVEL ROADS, RAILROADS, LINE CROSSINGS - APPROX 150 PLACES
CONTAINMENT STRUCTURES APPROX EVERY 5 MILES
*TERRAIN: 33% FLAT - ROLLING; 18% ROUGH; 26 % STEEP; 23 % LAVA ROCK

*** Percentages used for terrain were derived from topo mapping and preliminary routing studies depicting typical terrain in 3 categories; 1) flat to rolling land less than 8% slope; 2) rolling to rough land with slope of 12 - 20%; and 3) rough to steep land with slope greater than 20%.**

NORTHWESTERN ENERGY
TOWNSEND to MIDPOINT 500kV "DC" TRANSMISSION LINE PROJECT
LINE SUMMARY COST ESTIMATE
390 Miles Construction
Prepared by POWER Engineers, Inc.

Date: 9/11/2006
Rev. 0

ITEM	ITEMIZED COSTS	COST PER MILE
Conductor Hardware and Insulators: Material	$6,784,579	$17,396
Conductor Wire: Material	$63,320,400	$162,360
Conductor Sleeves and Bundle Spacers: Material	$115,000	$295
Install Conductor, Hardware and Insulators: Labor	$40,509,761	$103,871
Shield Wire Hardware: Material	$187,093	$480
Shield Wire: Material	$759,845	$1,948
Install Shield Wire and Hardware: Labor	$4,254,317	$10,909
OPGW Hardware & Misc: Material	$317,852	$815
OPGW Splice Encosures and Misc: Material	$203,278	$521
OPGW Wire: Material	$2,670,525	$6,848
Install OPGW Wire: Labor	$6,523,286	$16,726
Splice OPGW Wire: Labor	$350,401	$898
Lattice Structure: Material	$75,752,085	$194,236
Haul, Assemble and Erect Lattice Structures: Labor	$85,860,385	$220,155
Auger and Install Foundations: Labor	$79,013,380	$202,598
Install Concrete Foundations: Material	$7,226,503	$18,529
Structure Grounding: Material	$58,834	$151
Maintain Existing Roads: Labor	$128,827	$330
Build Access Roads: Labor	$1,484,897	$3,807
Crossing Guard Structures: Labor	$727,517	$1,865
Survey Access Roads / Crossings / Str Locations: Labor	$704,005	$1,805
Mobilization / Demobilization: Labor	$500,000	$1,282
SUB TOTAL >>>>>	$377,452,770	$967,828
Miles = 390		
Steel Structures = 1,471		
Engineering	$5,661,792	$14,517
Field Office / Mgmt	$6,039,244	$15,485
Aerial Photogrametry / Survey	$1,170,000	$3,000
Contingency 0.20	$75,490,554	$193,566
SUB TOTAL >>>>>	$88,361,590	$226,568
TOTALS >>>>>>>	$465,814,359	$1,194,396

ASSUMPTIONS
1471, SC "DC" LATTICE STEEL STRUCTURES = 1280-TAN, 37-LA, 37-MA, 29-HA, 44-LDE, 44-HDE
LATTICE STEEL PRICE @ $1.10 PER POUND (pricing fron distributor)
2312 kcmil ACSR "THRASHER" @ $7.50 PER FOOT - VERTICAL DOUBLE BUNDLE (pricing from plant)
PORCELAIN INSULATORS (pricing from plant)
CONDUCTOR AND EHS SUSPENSION CLAMPS W/ARMOR ROD AND DAMPERS (pricing from previous projects)
48 COUNT OPGW @ 1.20 PER FOOT (pricing from distributor)
1/2" EHS SHIELD WIRE @ 0.36 PER FOOT (pricing from plant)
1,150' AVERAGE SPAN
GRADE AND MAINTAIN APPROX 98 MILES OF ROADS DURING CONSTRUCTION
INSTALL AND REMOVE GUARD STRUCTURES FOR CROSSING FREEWAYS, STATE HIGHWAYS, SECONDARY ROADS, GRAVEL ROADS, RAILROADS, LINE CROSSINGS - APPROX 175 PLACES
CONTAINMENT STRUCTURES APPROX EVERY 5 MILES
*TERRAIN: 66% FLAT - ROLLING; 14% ROUGH; 20% STEEP

*** Percentages used for terrain were derived from topo mapping and preliminary routing studies depicting typical terrain in 3 categories; 1) flat to rolling land less than 8% slope; 2) rolling to rough land with slope of 12 - 20%; and 3) rough to steep land with slope greater than 20%.**

Appendix H
Station Estimates

NORTHWEST ENERGY
Mill Creek-Borah
BORAH 230kV Substation

CONSTRUCTION	Material Cost	Labor Cost	Total Cost
Equipment	$ 1,818,200	$ 349,776	$ 2,167,976
Structures	$ 163,440	$ 45,763	$ 209,203
Foundations	$ 51,100	$ 257,544	$ 308,644
Cable and Conduit	$ 50,300	$ 80,640	$ 130,940
Site Work, Fence and Grounding	$ 40,180	$ 70,224	$ 110,404
Control House	$ 129,000	$ 51,072	$ 180,072
Relay, Meter, Control, Comm	$ 190,000	$ 14,784	$ 204,784
Construction Subtotal			$ 3,312,023
Construction Contingency		20.0%	$ 662,405
CONSTRUCTION TOTAL			**$ 3,974,428**
DESIGN & COORDINATION			
Engineering and PM		10.0%	$ 397,443
DESIGN & COORDINATION TOTAL			**$ 397,443**
MISCELLANEOUS			
Property Purchase			$ -
Survey			$ -
Geotech			$ 10,000
Construction Management			$ 150,000
Commissioning			$ 54,160
MISCELLANEOUS TOTAL			**$ 214,160**
TOTAL SUBSTATION ESTIMATED PROBABLE COST			**$ 4,586,031**

11/10/2006
9:20 AM

NORTHWEST ENERGY
Mill Creek-Borah
Lima 230kV Compensation Station

CONSTRUCTION	Material Cost	Labor Cost	Total Cost
Equipment	$ 17,220,800	$ 817,152	$ 7,134,400
Structures	$ 335,160	$ 93,845	$ -
Foundations	$ 99,800	$ 502,992	$ 72,480
Cable and Conduit	$ 106,500	$ 192,360	$ -
Site Work, Fence and Grounding	$ 307,440	$ 524,160	$ 831,600
Control House	$ 251,000	$ 78,624	$ 329,624
Relay, Meter, Control, Comm	$ 220,000	$ 17,472	$ -
Construction Subtotal			$ 8,368,104
Construction Contingency		20.0%	$ 1,673,621
CONSTRUCTION TOTAL			**$ 10,041,725**
DESIGN & COORDINATION			
Engineering and PM		5.0%	$ 502,086
DESIGN & COORDINATION TOTAL			**$ 502,086**
MISCELLANEOUS			
Property Purchase			$ 500,000
Survey			$ 30,000
Geotech			$ 20,000
Construction Management			$ 200,000
Commissioning			$ 76,864
MISCELLANEOUS TOTAL			**$ 826,864**
TOTAL SUBSTATION ESTIMATED PROBABLE COST			**$ 11,370,675**

11/10/2006
9:22 AM

NORTHWEST ENERGY
Mill Creek-Borah
MILL CREEK 230kV Substation

CONSTRUCTION	Material Cost	Labor Cost	Total Cost
Equipment	$ 17,220,800	$ 817,152	$ 18,037,952
Structures	$ 335,160	$ 93,845	$ 429,005
Foundations	$ 99,800	$ 502,992	$ 602,792
Cable and Conduit	$ 106,500	$ 192,360	$ 298,860
Site Work, Fence and Grounding	$ 307,440	$ 524,160	$ 831,600
Control House	$ 251,000	$ 78,624	$ 329,624
Relay, Meter, Control, Comm	$ 220,000	$ 17,472	$ 237,472
Construction Subtotal			$ 20,767,305
Construction Contingency		20.0%	$ 4,153,461
CONSTRUCTION TOTAL			**$ 24,920,766**
DESIGN & COORDINATION			
Engineering and PM		5.0%	$ 1,246,038
DESIGN & COORDINATION TOTAL			**$ 1,246,038**
MISCELLANEOUS			
Property Purchase			$ 500,000
Survey			$ 30,000
Geotech			$ 20,000
Construction Management			$ 200,000
Commissioning			$ 133,984
MISCELLANEOUS TOTAL			**$ 883,984**
TOTAL SUBSTATION ESTIMATED PROBABLE COST			**$ 27,050,788**

11/10/2006
9:24 AM

NORTHWEST ENERGY
345kV Townsend-Borah
BORAH Substation

CONSTRUCTION	Material Cost	Labor Cost	Total Cost
Equipment	$ 3,562,500	$ 286,272	$ 3,848,772
Structures	$ 239,040	$ 66,931	$ 305,971
Foundations	$ 78,750	$ 253,512	$ 332,262
Cable and Conduit	$ 70,200	$ 119,280	$ 189,480
Site Work, Fence and Grounding	$ 69,440	$ 124,320	$ 193,760
Control House	$ 129,000	$ 51,072	$ 180,072
Relay, Meter, Control, Comm	$ 205,000	$ 14,784	$ 219,784
Construction Subtotal			$ 5,270,101
Construction Contingency		20.0%	$ 1,054,020
CONSTRUCTION TOTAL			**$ 6,324,121**
DESIGN & COORDINATION			
Engineering and PM		10.0%	$ 632,412
DESIGN & COORDINATION TOTAL			**$ 632,412**
MISCELLANEOUS			
Property Purchase			
Survey			$ -
Geotech			$ 10,000
Construction Management			$ 150,000
Commissioning			$ 280,480
MISCELLANEOUS TOTAL			**$ 440,480**
TOTAL SUBSTATION ESTIMATED PROBABLE COST			**$ 7,397,014**

11/10/2006
9:25 AM

NORTHWEST ENERGY
345kVTownsend-Borah
Dubois Compensation Station

CONSTRUCTION	Material Cost	Labor Cost	Total Cost
Equipment	$ 10,000,000	$ 100,800	$ 10,100,800
Structures	$ -	$ -	$ -
Foundations	$ 5,000	$ 25,200	$ 30,200
Cable and Conduit	$ -	$ -	$ -
Site Work, Fence and Grounding	$ 453,460	$ 775,320	$ 1,228,780
Control House	$ 310,000	$ 83,664	$ 393,664
Relay, Meter, Control, Comm	$ -	$ -	$ -
Construction Subtotal			$ 11,753,444
Construction Contingency		20.0%	$ 2,350,689
CONSTRUCTION TOTAL			**$ 14,104,133**
DESIGN & COORDINATION			
Engineering and PM		5.0%	$ 705,207
DESIGN & COORDINATION TOTAL			**$ 705,207**
MISCELLANEOUS			
Property Purchase			$ 500,000
Survey			$ 40,000
Geotech			$ 30,000
Construction Management			$ 225,000
Commissioning			$ 80,224
MISCELLANEOUS TOTAL			**$ 875,224**
TOTAL SUBSTATION ESTIMATED PROBABLE COST			**$ 15,684,563**

11/10/2006
9:30 AM

NORTHWEST ENERGY
345kVTownsend-Borah
TOWNSEND Substation

CONSTRUCTION	Material Cost	Labor Cost	Total Cost
Equipment	$ 41,707,900	$ 1,606,416	$ 43,314,316
Structures	$ 1,613,520	$ 451,786	$ 2,065,306
Foundations	$ 342,700	$ 1,727,208	$ 2,069,908
Cable and Conduit	$ 180,000	$ 320,880	$ 500,880
Site Work, Fence and Grounding	$ 453,460	$ 775,320	$ 1,228,780
Control House	$ 310,000	$ 83,664	$ 393,664
Relay, Meter, Control, Comm	$ 585,000	$ 38,976	$ 623,976
Construction Subtotal			$ 50,196,830
Construction Contingency		20.0%	$ 10,039,366
CONSTRUCTION TOTAL			**$ 60,236,196**
DESIGN & COORDINATION			
Engineering and PM		5.0%	$ 3,011,810
DESIGN & COORDINATION TOTAL			**$ 3,011,810**
MISCELLANEOUS			
Property Purchase			$ 500,000
Survey			$ 40,000
Geotech			$ 30,000
Construction Management			$ 225,000
Commissioning			$ 280,480
MISCELLANEOUS TOTAL			**$ 1,075,480**
TOTAL SUBSTATION ESTIMATED PROBABLE COST			**$ 64,323,485**

11/10/2006
9:31 AM

NORTHWEST ENERGY
500kV Townsend-Borah
BORAH Substation

CONSTRUCTION	Material Cost	Labor Cost	Total Cost
Equipment	$ 5,874,000	$ 579,600	$ 6,453,600
Structures	$ 350,460	$ 79,296	$ 429,756
Foundations	$ 124,500	$ 387,744	$ 512,244
Cable and Conduit	$ 89,500	$ 133,560	$ 223,060
Site Work, Fence and Grounding	$ 119,000	$ 208,320	$ 327,320
Control House	$ 251,000	$ 78,624	$ 329,624
Relay, Meter, Control, Comm	$ 230,000	$ 17,472	$ 247,472
Construction Subtotal			$ 8,523,076
Construction Contingency		20.0%	$ 1,704,615
CONSTRUCTION TOTAL			**$ 10,227,691**
DESIGN & COORDINATION			
Engineering and PM		5.0%	$ 511,385
DESIGN & COORDINATION TOTAL			**$ 511,385**
MISCELLANEOUS			
Property Purchase			$ -
Survey			$ -
Geotech			$ 30,000
Construction Management			$ 200,000
Commissioning			$ 120,880
MISCELLANEOUS TOTAL			**$ 350,880**
TOTAL SUBSTATION ESTIMATED PROBABLE COST			**$ 11,089,956**

11/10/2006
9:32 AM

NORTHWEST ENERGY
500kVTownsend-Borah
Dubois Compensation Station

CONSTRUCTION	Material Cost	Labor Cost	Total Cost
Equipment	$ 15,000,000	$ 100,800	$ 15,100,800
Structures	$ -	$ -	$ -
Foundations	$ 5,000	$ 25,200	$ 30,200
Cable and Conduit	$ -	$ -	$ -
Site Work, Fence and Grounding	$ 544,152	$ 930,384	$ 1,474,536
Control House	$ 301,000	$ 83,664	$ 384,664
Relay, Meter, Control, Comm	$ -	$ -	$ -
Construction Subtotal		$ -	$ 16,990,200
Construction Contingency		20.0%	$ 3,398,040
CONSTRUCTION TOTAL			**$ 20,388,240**
DESIGN & COORDINATION			
Engineering and PM		5.0%	$ 1,019,412
DESIGN & COORDINATION TOTAL			**$ 1,019,412**
MISCELLANEOUS			
Property Purchase			$ 500,000
Survey			$ 40,000
Geotech			$ 30,000
Construction Management			$ 225,000
Commissioning			$ 70,224
MISCELLANEOUS TOTAL			**$ 865,224**
TOTAL SUBSTATION ESTIMATED PROBABLE COST			**$ 22,272,876**

11/10/2006
10:35 AM

NORTHWEST ENERGY
500kV Townsend-Borah
TOWNSEND Substation

CONSTRUCTION	Material Cost	Labor Cost	Total Cost
Equipment	$ 41,601,200	$ 1,305,360	$ 42,906,560
Structures	$ 1,300,860	$ 206,304	$ 1,507,164
Foundations	$ 343,250	$ 1,063,272	$ 1,406,522
Cable and Conduit	$ 190,000	$ 330,960	$ 520,960
Site Work, Fence and Grounding	$ 536,900	$ 924,000	$ 1,460,900
Control House	$ 301,000	$ 81,984	$ 382,984
Relay, Meter, Control, Comm	$ 440,000	$ 30,912	$ 470,912
Construction Subtotal			$ 48,656,002
Construction Contingency		20.0%	$ 9,731,200
CONSTRUCTION TOTAL			**$ 58,387,202**
DESIGN & COORDINATION			
Engineering and PM		5.0%	$ 2,919,360
DESIGN & COORDINATION TOTAL			**$ 2,919,360**
MISCELLANEOUS			
Property Purchase			$ 500,000
Survey			$ 40,000
Geotech			$ 40,000
Construction Management			$ 250,000
Commissioning			$ 241,840
MISCELLANEOUS TOTAL			**$ 1,071,840**
TOTAL SUBSTATION ESTIMATED PROBABLE COST			**$ 62,378,403**

11/10/2006
10:37 AM

NORTHWEST ENERGY
500kV DC Townsend-Borah
BORAH Substation

CONSTRUCTION	Material Cost	Labor Cost	Total Cost
Equipment	$ 5,400,000	$ 532,560	$ 5,932,560
Structures	$ 307,260	$ 75,264	$ 382,524
Foundations	$ 85,500	$ 245,952	$ 331,452
Cable and Conduit	$ 79,000	$ 112,560	$ 191,560
Site Work, Fence and Grounding	$ 119,000	$ 208,320	$ 327,320
Control House	$ 251,000	$ 78,624	$ 329,624
Relay, Meter, Control, Comm	$ 230,000	$ 17,472	$ 247,472
Construction Subtotal			$ 7,742,512
Construction Contingency		20.0%	$ 1,548,502
CONSTRUCTION TOTAL			**$ 9,291,014**
DESIGN & COORDINATION			
Engineering and PM		5.0%	$ 464,551
DESIGN & COORDINATION TOTAL			**$ 464,551**
MISCELLANEOUS			
Property Purchase			$ -
Survey			$ -
Geotech			$ 30,000
Construction Management			$ 200,000
Commissioning			$ 112,480
MISCELLANEOUS TOTAL			**$ 342,480**
TOTAL SUBSTATION ESTIMATED PROBABLE COST			**$ 10,098,045**

11/10/2006
9:34 AM

NORTHWEST ENERGY
500kV DC Townsend-Borah
TOWNSEND Substation

CONSTRUCTION	Material Cost	Labor Cost	Total Cost
Equipment	$ 21,359,200	$ 1,033,200	$ 22,392,400
Structures	$ 1,171,260	$ 194,208	$ 1,365,468
Foundations	$ 238,250	$ 707,112	$ 945,362
Cable and Conduit	$ 160,000	$ 288,960	$ 448,960
Site Work, Fence and Grounding	$ 536,900	$ 924,000	$ 1,460,900
Control House	$ 301,000	$ 81,984	$ 382,984
Relay, Meter, Control, Comm	$ 380,000	$ 25,536	$ 405,536
Construction Subtotal			$ 27,401,610
Construction Contingency		20.0%	$ 5,480,322
CONSTRUCTION TOTAL			**$ 32,881,932**
DESIGN & COORDINATION			
Engineering and PM		5.0%	$ 1,644,097
DESIGN & COORDINATION TOTAL			**$ 1,644,097**
MISCELLANEOUS			
Property Purchase			$ 500,000
Survey			$ 40,000
Geotech			$ 40,000
Construction Management			$ 250,000
Commissioning			$ 223,360
MISCELLANEOUS TOTAL			**$ 1,053,360**
TOTAL SUBSTATION ESTIMATED PROBABLE COST			**$ 35,579,389**

11/10/2006
9:35 AM

Appendix I
Station One-Line Estimates

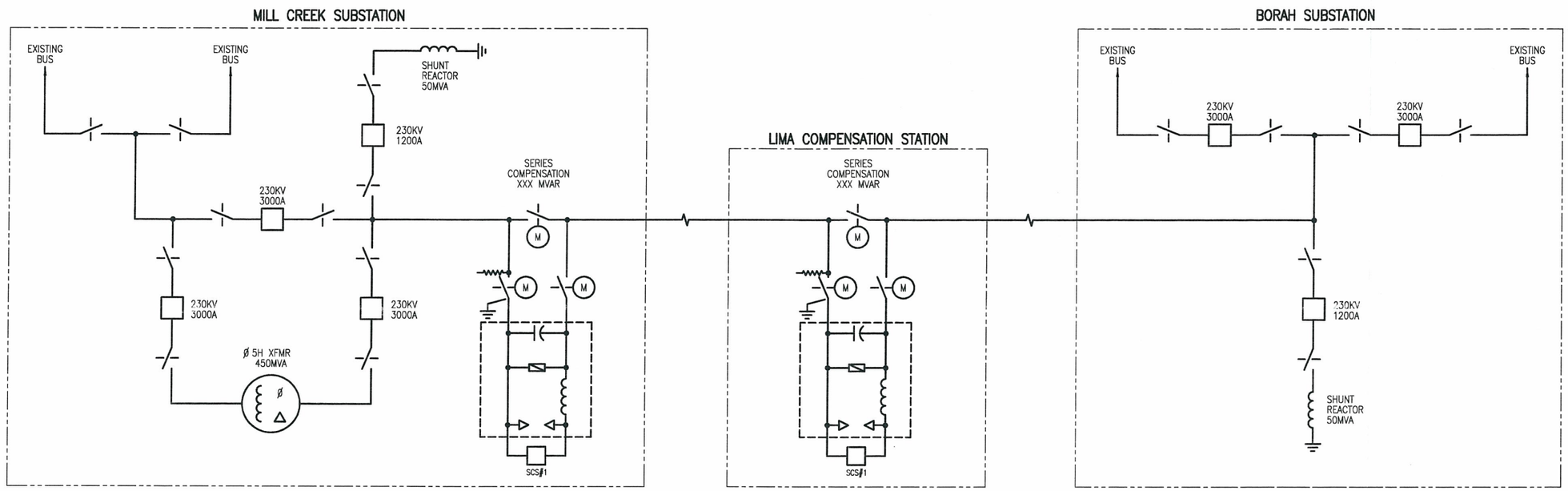

230KV MILL CREEK – BORAH

LEGEND

- GROUP OPERATED DISCONNECT SWITCH WITH GROUND SWITCH
- MOTOR OPERATED SWITCH
- CIRCUIT BREAKER
- PHASE ANGLE REGULATOR
- SHUNT REACTOR

THIS DRAWING WAS PREPARED BY POWER ENGINEERS, INC. FOR A SPECIFIC PROJECT, TAKING INTO CONSIDERATION THE SPECIFIC AND UNIQUE REQUIREMENTS OF THE PROJECT. REUSE OF THIS DRAWING OR ANY INFORMATION CONTAINED IN THIS DRAWING FOR ANY PURPOSE IS PROHIBITED UNLESS WRITTEN PERMISSION FROM BOTH POWER AND POWER'S CLIENT IS GRANTED.

23nwe_230sw_dia

REV	REVISIONS	DATE	DRN	DSGN	CKD	APPD	REFERENCE DRAWINGS	
B	ISSUED FOR REVIEW	11/08/06	CA	LA	–	–		
A	ISSUED FOR REVIEW	10/24/06	CA	LA	–	–	*	*

DSGN	LA	10/24/06
DRN	CA	10/24/06
CKD		
SCALE:	NONE	

FOR 22x34 DWG ONLY

POWER ENGINEERS
www.powereng.com

NORTHWESTERN ENERGY
MILL CREEK TO BORAH
230KV SWITCHING DIAGRAM

JOB NUMBER 110860
REV B
DRAWING NUMBER 230SW–1

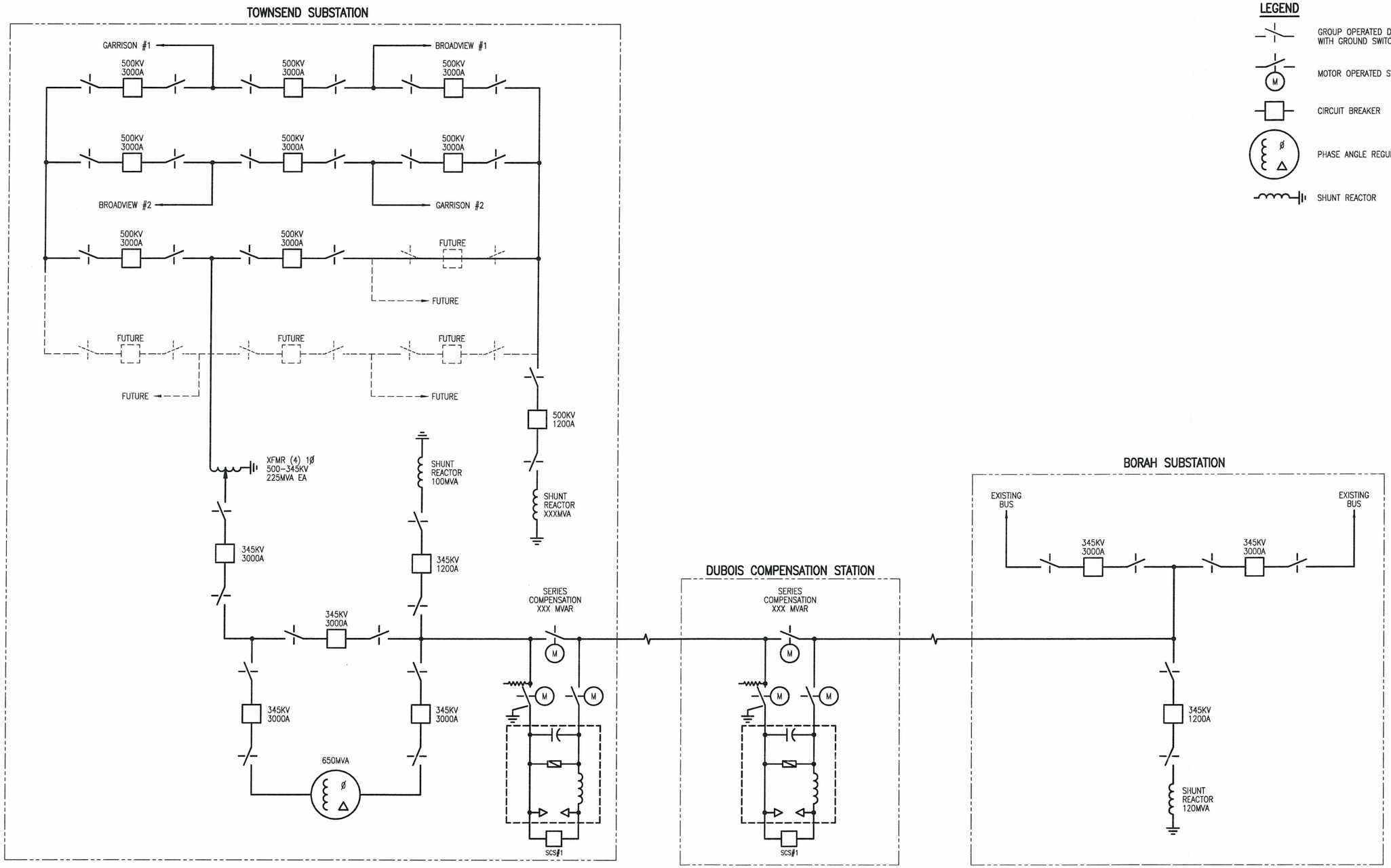

LEGEND

- GROUP OPERATED DISCONNECT SWITCH WITH GROUND SWITCH
- MOTOR OPERATED SWITCH
- CIRCUIT BREAKER
- PHASE ANGLE REGULATOR
- SHUNT REACTOR

345KV TOWNSEND – BORAH

THIS DRAWING WAS PREPARED BY POWER ENGINEERS, INC. FOR A SPECIFIC PROJECT, TAKING INTO CONSIDERATION THE SPECIFIC AND UNIQUE REQUIREMENTS OF THE PROJECT. REUSE OF THIS DRAWING OR ANY INFORMATION CONTAINED IN THIS DRAWING FOR ANY PURPOSE IS PROHIBITED UNLESS WRITTEN PERMISSION FROM BOTH POWER AND POWER'S CLIENT IS GRANTED.

23nwe_230sw_dia

REV	REVISIONS	DATE	DRN	DSGN	CKD	APPD	REFERENCE DRAWINGS	
B	ISSUED FOR REVIEW	11/08/06	CA	LA	–	–		
A	ISSUED FOR REVIEW	10/24/06	CA	LA	–	–	*	*

DSGN	LA	10/24/06
DRN	CA	10/24/06
CKD		
SCALE:	NONE	
FOR 22x34 DWG ONLY		

POWER ENGINEERS
www.powereng.com

NORTHWESTERN ENERGY
TOWNSEND TO BORAH
345KV SWITCHING DIAGRAM

JOB NUMBER 110860
REV B
DRAWING NUMBER 345SW-1

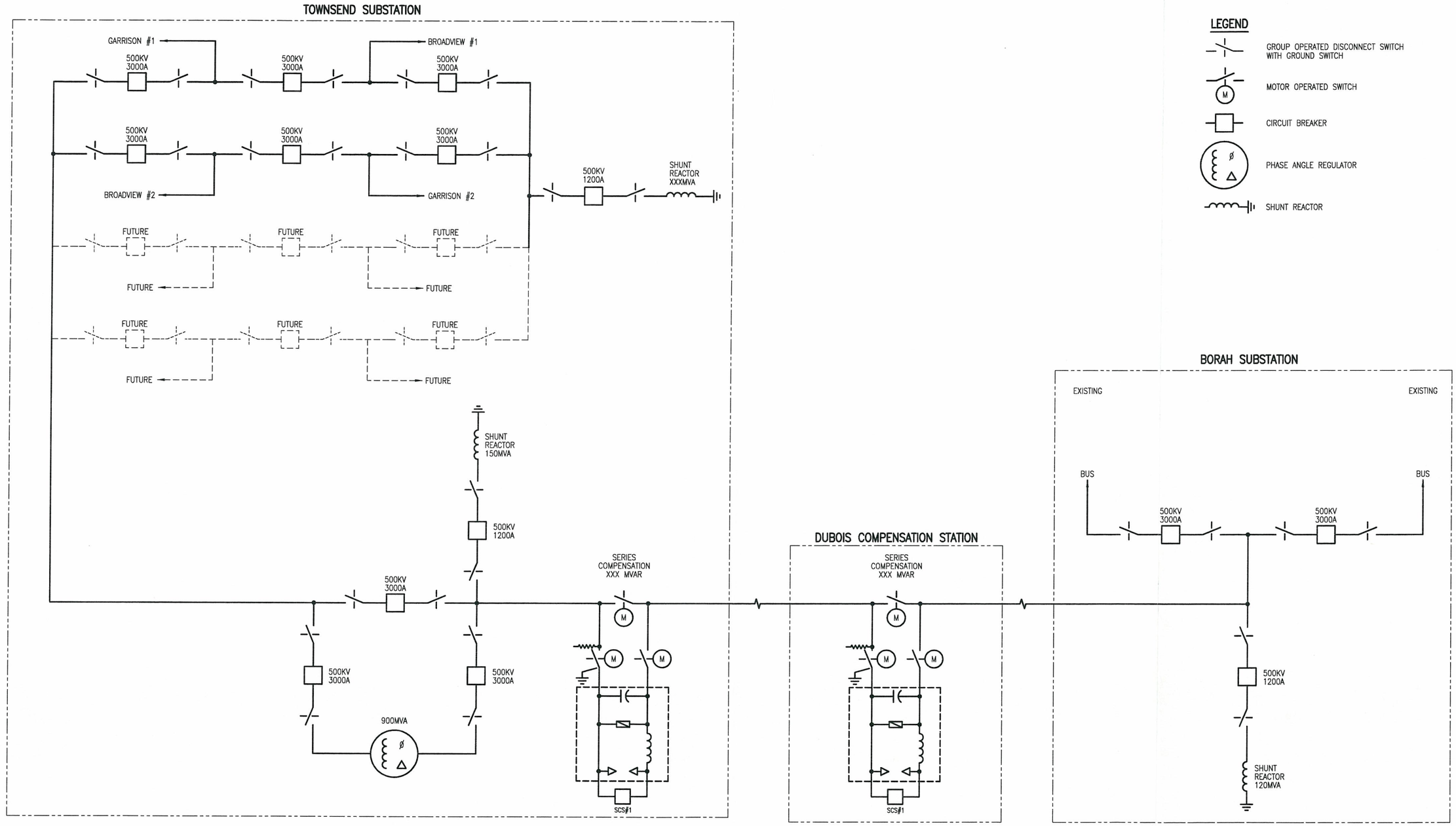

500KV TOWNSEND – BORAH

THIS DRAWING WAS PREPARED BY POWER ENGINEERS, INC. FOR A SPECIFIC PROJECT, TAKING INTO CONSIDERATION THE SPECIFIC AND UNIQUE REQUIREMENTS OF THE PROJECT. REUSE OF THIS DRAWING OR ANY INFORMATION CONTAINED IN THIS DRAWING FOR ANY PURPOSE IS PROHIBITED UNLESS WRITTEN PERMISSION FROM BOTH POWER AND POWER'S CLIENT IS GRANTED.

23nwe_230sw_dia

REV	REVISIONS	DATE	DRN	DSGN	CKD	APPD
C	ISSUED FOR REVIEW	11/09/06	CA	LA	–	–
B	ISSUED FOR REVIEW	11/08/06	CA	LA	–	–
A	ISSUED FOR REVIEW	10/24/06	CA	LA	–	–

REFERENCE DRAWINGS: * *

DSGN	LA	10/24/06
DRN	CA	10/24/06
CKD		

SCALE: NONE

FOR 22x34 DWG ONLY

POWER ENGINEERS
www.powereng.com

NORTHWESTERN ENERGY

TOWNSEND TO BORAH

500KV SWITCHING DIAGRAM

JOB NUMBER 110860

REV C

DRAWING NUMBER 500SW–1

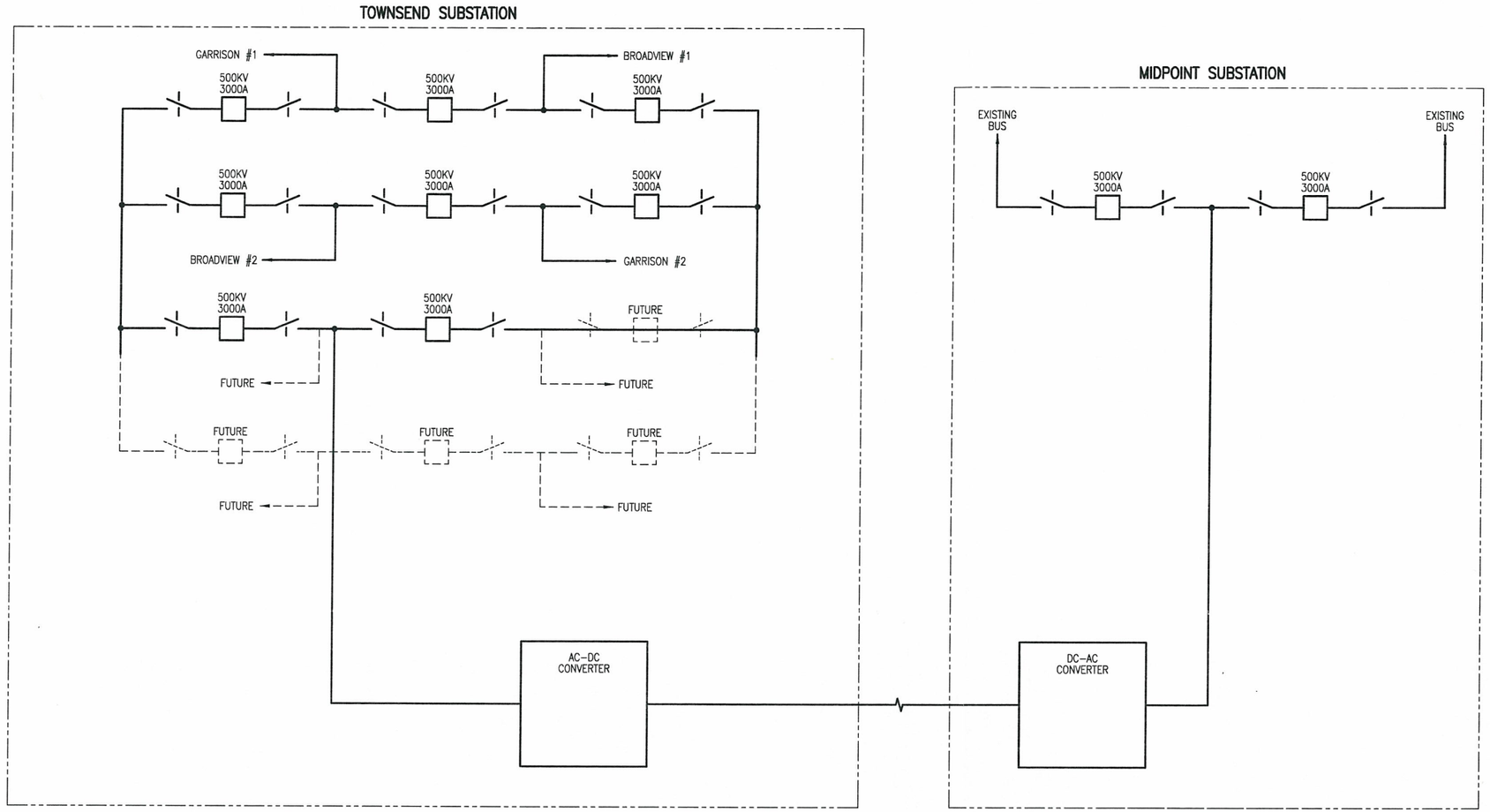

500KV DC TOWNSEND – MIDPOINT

LEGEND

- GROUP OPERATED DISCONNECT SWITCH WITH GROUND SWITCH
- MOTOR OPERATED SWITCH
- CIRCUIT BREAKER
- PHASE ANGLE REGULATOR

23nwe_230sw_dis2
THIS DRAWING WAS PREPARED BY POWER ENGINEERS, INC. FOR A SPECIFIC PROJECT, TAKING INTO CONSIDERATION THE SPECIFIC AND UNIQUE REQUIREMENTS OF THE PROJECT. REUSE OF THIS DRAWING OR ANY INFORMATION CONTAINED IN THIS DRAWING FOR ANY PURPOSE IS PROHIBITED UNLESS WRITTEN PERMISSION FROM BOTH POWER AND POWER'S CLIENT IS GRANTED.

REV	REVISIONS	DATE	DRN	DSGN	CKD	APPD	REFERENCE DRAWINGS	
B	ISSUED FOR REVIEW	11/09/06	CA	LA	–	–		
A	ISSUED FOR REVIEW	10/24/06	CA	LA	–	–	*	*

DSGN	LA	10/24/06
DRN	CA	10/24/06
CKD		

SCALE: NONE

FOR 22x34 DWG ONLY

POWER ENGINEERS
www.powereng.com

NORTHWESTERN ENERGY
TOWNSEND TO MIDPOINT DC
500KV SWITCHING DIAGRAM

JOB NUMBER 110860
REV B
DRAWING NUMBER 500SW-2

Appendix J
Historical Commodity Prices

Steel Plate Cut-to-Length Price

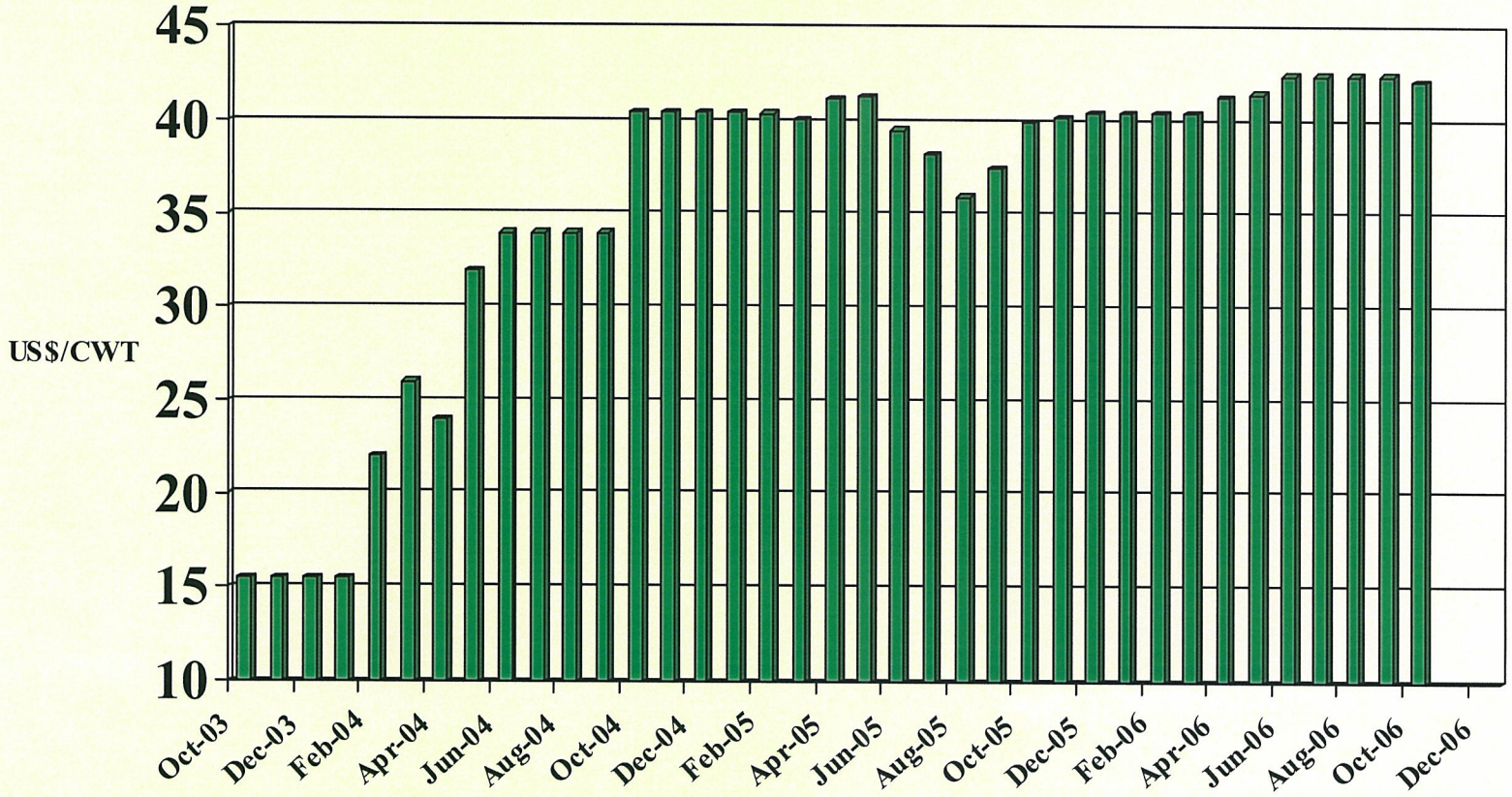

Source: American Metal Market Price Archives, 5/3/05

Thomas & Betts, Steel Structures

Aluminum Prices

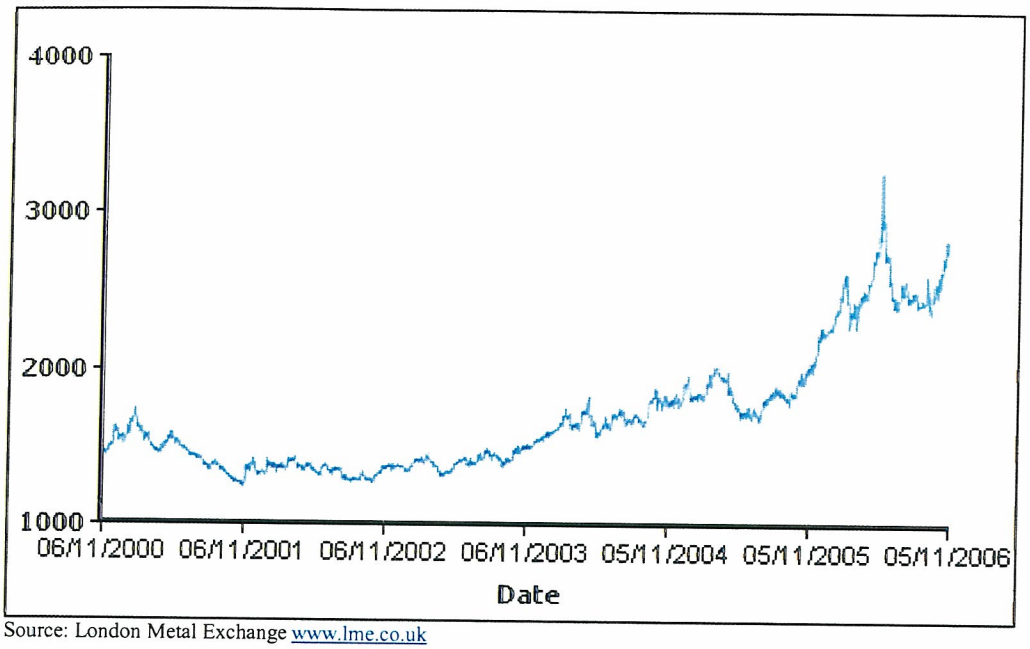

Source: London Metal Exchange www.lme.co.uk

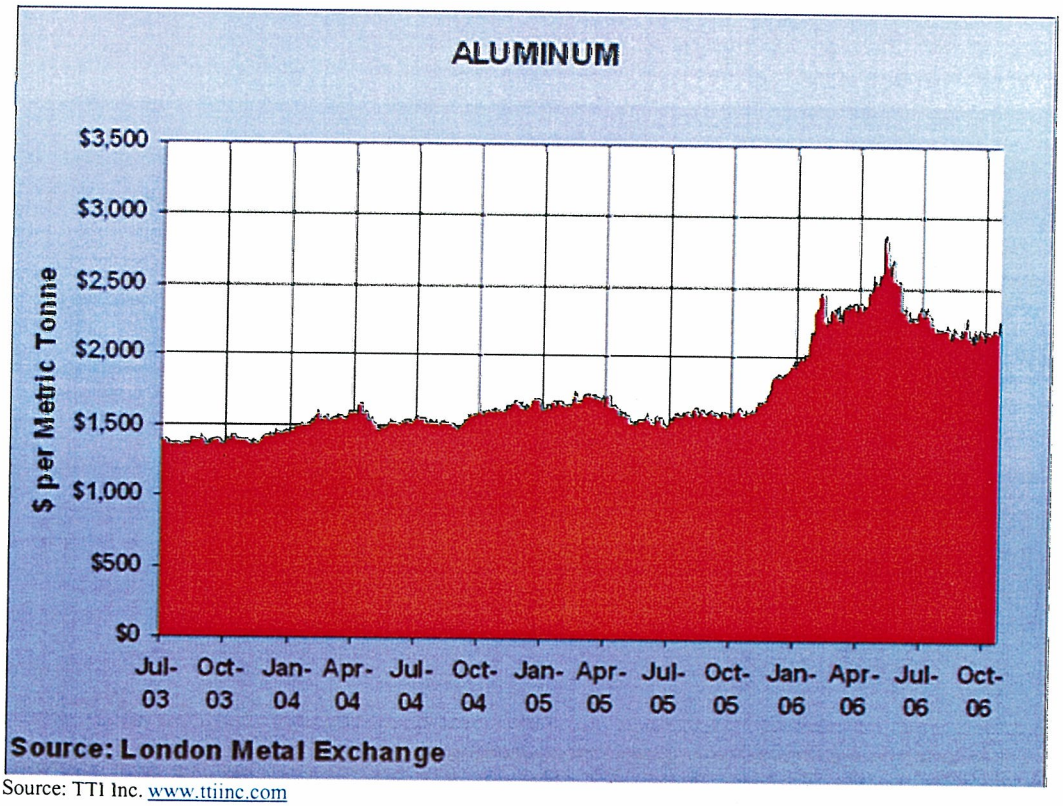

Source: TTI Inc. www.ttiinc.com

Steel Prices

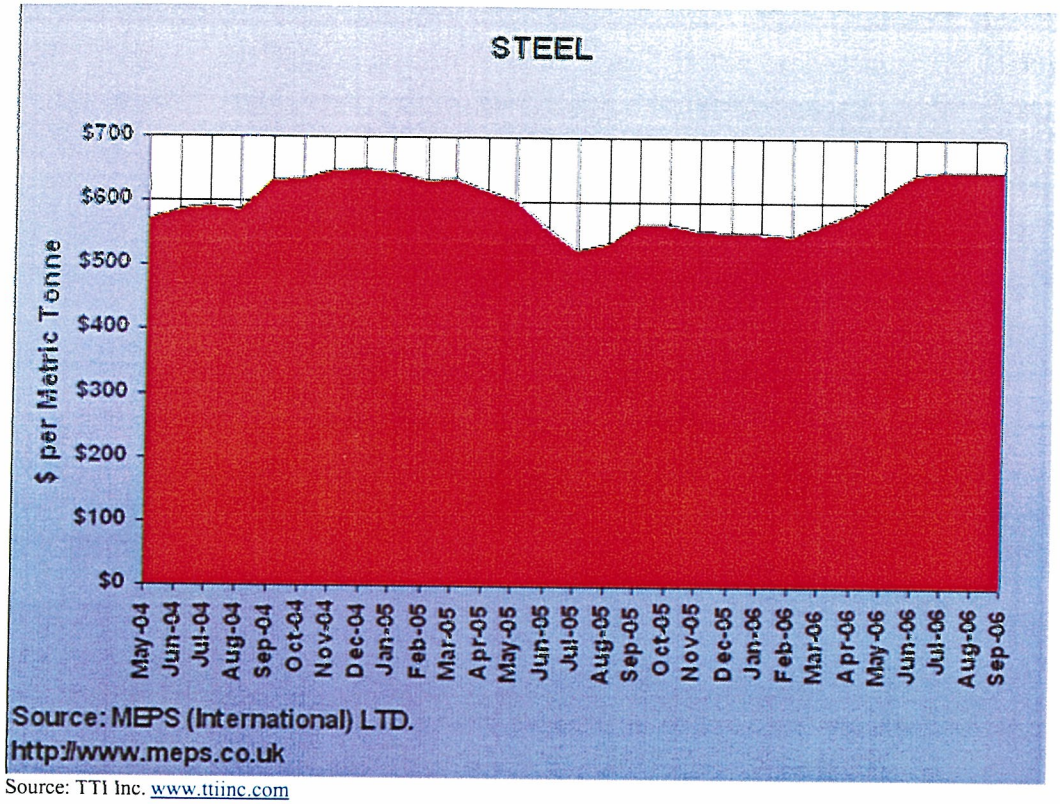

Source: TTI Inc. www.ttiinc.com

Copper Prices

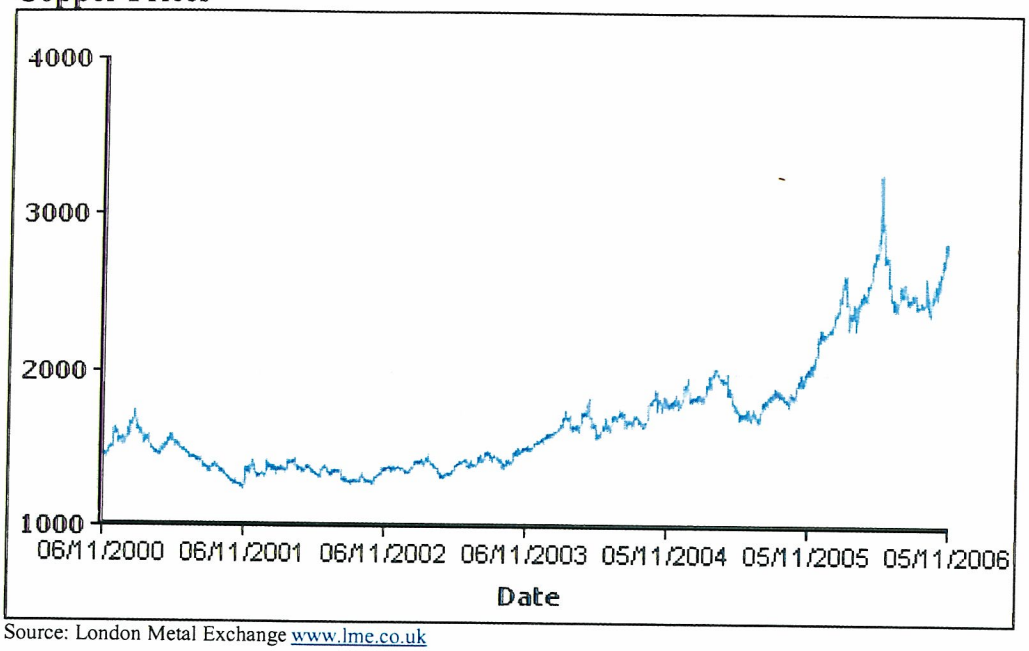

Source: London Metal Exchange www.lme.co.uk

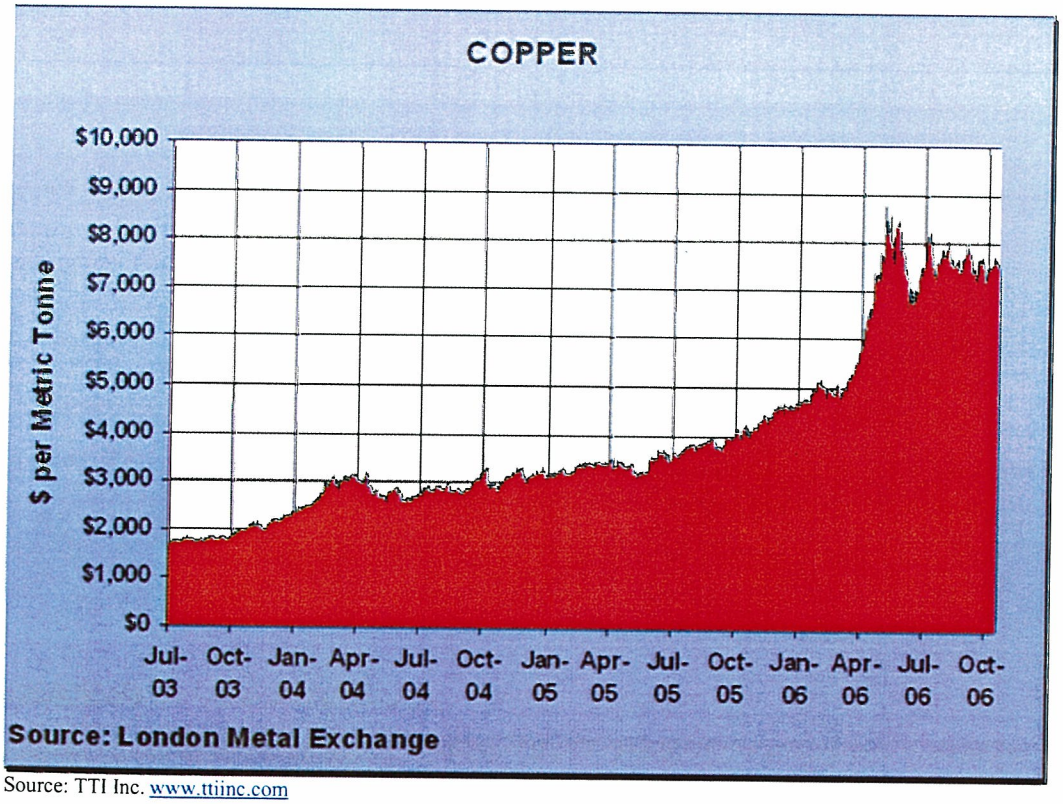

Source: TTI Inc. www.ttiinc.com

Zinc Prices

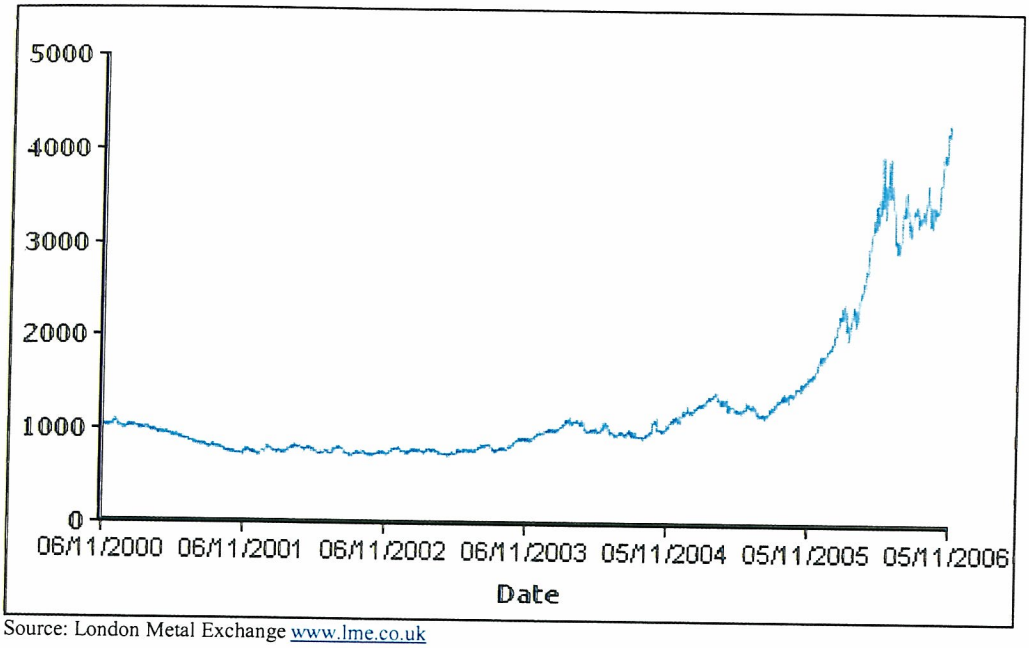

Source: London Metal Exchange www.lme.co.uk

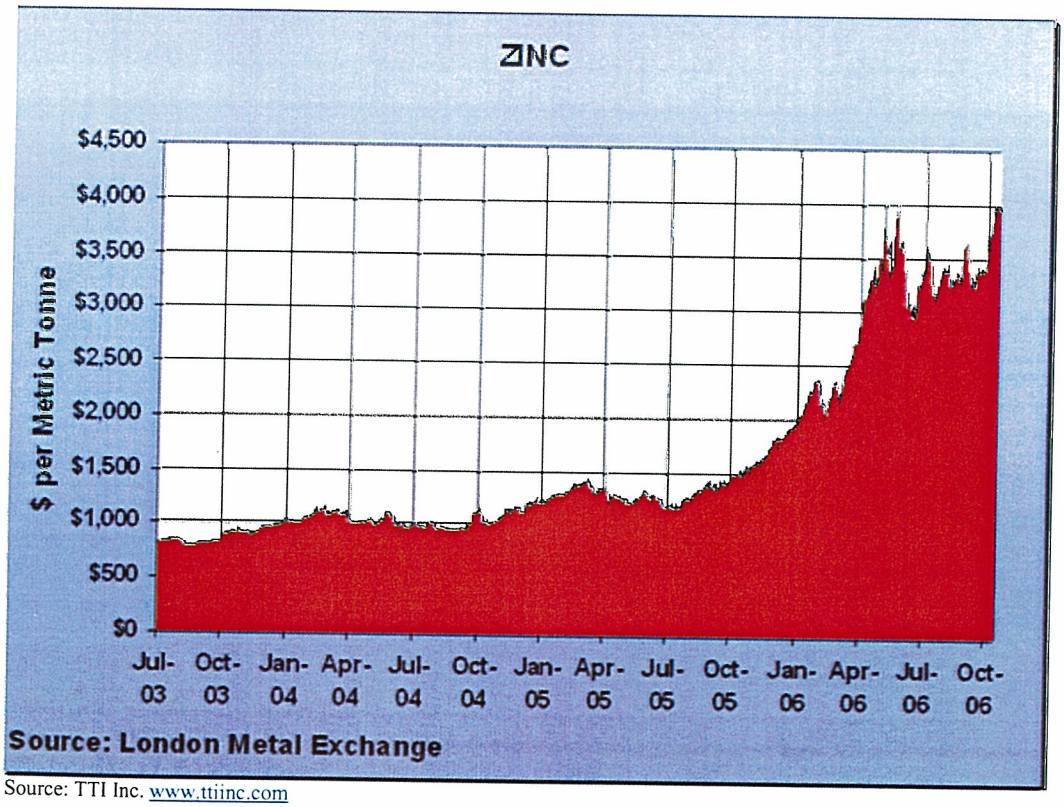

Source: TTI Inc. www.ttiinc.com

Appendix K
List of Preparers

List of Preparers

The following individuals participated in the preparation of the Northwestern Energy Townsend to Midpoint 500 kV Transmission Line Study.

NorthWestern Energy

Rick Walsh, Director, *Manager, Environmental Permitting*

Thomas D. Pankratz, P.E., *Manager, Electric Transmission Construction and Maintenance*

POWER Engineers, Inc.

Jim Jensen, *Project Manager*

Darrin Gilbert, *Project Coordinator, Visual Resources*

John Everingham, *Environmental & Engineering Coordination, Environmental Technical Support*

Mark Schaffer, *Land Use Resources*

Terry Enk, *Biological Resources, Wildlife*

Cindy Lysne, *Biological Resources, Vegetation and Water Resources and Wetlands*

Jim Rudolph, *Cultural Resources*

Jeff Allred, *Earth Resources and Slope*

Tim Hazekamp, *GIS*

Aaron Ames, *GIS*

Joann Franklin, *GIS*

Ron Beazer, *Substation Engineering*

Lan Alder, *Substation Engineering*

Darel Tracy, *Transmission Line Engineering*

Rod Reil, *Transmission Line Engineering*

Pat Smith, *Administrative Assistant*

Paula Marshall, *Administrative Assistant*