Commercial Building Energy Code Summary 2007

September 2007

Overview

The Administrative Rules of Montana (Title 24, Chapter 301.160) require that all commercial buildings, with exceptions noted below, must comply with the International Energy Conservation Code (IECC) 2003 or ASHRAE/IESNA 90.1-2001.

Residential buildings over three stories above grade must comply with these commercial building code requirements. Residential buildings three stories or less above grade are required to follow the residential section of the 2003 IECC with Montana amendments. A summary of the residential energy code requirements are listed at **www.energizemontana.com** and available from the contact information listed at the bottom of this page.

Exceptions: This code does not apply to very low energy-use buildings using less than 3.4 Btu/h per square foot for space heating or buildings that are neither heated nor cooled or designated as historic or which have been determined to be eligible for such listing.

This publication is an overview of the 2003 IECC. A complete 2003 IECC is available for purchase at the International Code Council (ICC) web site **www.iccsafe.org** at the ICC store under 2003 International Codes.

The information in this Energy Code Summary is based on 2003 IECC. 2003 IECC includes a manual method using prescriptive compliance paths. A software method, COMCheck ™, is another way to demonstrate code compliance. COMCheck™ is available free of charge on the internet at **http://www.energycodes.gov** or by calling the Montana Department of Environmental Quality at (406) 841-5232.

ASHRAE/IESNA 90.1-2001 can be used to demonstrate compliance with the envelope, lighting, and mechanical and service water-heating portions of the code. However, if ASHRAE/IESNA 90.1-2001 is used, it must be used for the entire section; envelope, lighting, mechanical or service water heating. For example, using parts of 2003 IECC for lighting and parts of ASHRAE for lighting compliance is not allowed.

This code establishes minimum prescriptive and performance-related regulations for envelope requirements, lighting, mechanical, and service water heating. Alterations to existing conditioned spaces must comply with 2003 IECC requirements; unchanged portions do not have to comply.

COVERED IN THIS ISSUE

- LIGHTING REQUIREMENTS
- MECHANICAL REQUIREMENTS
- SERVICE WATER HEATING
- ENVELOPE REQUIREMENTS

Montana Department of Environmental Quality

For more information contact:
Paul Tschida • Phone (406) 841-5232 • E-mail: ptschida@mt.gov
http://www.deq.mt.gov/Energy/index.asp

Lighting Requirements 2003 IECC Section 805

Interior Lighting Controls

Each area enclosed by walls or floor to ceiling partitions shall have at least one manual control for lights in that area. The control shall be in the area with the lights or be a remote switch that indicates the lights served and their status. Exceptions are areas designated as security or emergency areas that must be continuously lighted and lighting in stairways or corridors that are elements of means of egress. Other exceptions are areas that have only one light and areas controlled by an occupant sensor or in corridors, storerooms, restrooms or public lobbies.

Light Reduction Controls

Each area that is required to have a manual control shall allow the occupant to reduce the lights in a reasonable pattern by at least 50 percent by one of the following or other approved method:

1. Controlling all lights;
2. Dual switching of alternate rows of lights or alternate lights;
3. Switch the middle lamp independent of outer lamp or switching each lamp.

Light reduction controls are not required if the area has only one light, is controlled by an occupant-sensing device, is in a corridor, storeroom, restroom, public lobby, guest room or spaces that use less than .6 watt per square feet.

Automatic Lighting Shutoff

Buildings larger than 5000 square feet shall be equipped with an automatic control device to shut off lighting in that area. This automatic device shall function on either:

1. A scheduled basis, using time of day, with an independent program schedule that controls the interior lighting in areas that are less than 25,000 square feet and not more than one floor.

2 An unscheduled basis by occupant intervention.

Occupant Override Requirement

Where an automatic time switch is installed, it shall incorporate an override switching device that is readily accessible, located so that the person using the device can see the lights or is aware of the lights status, is manually operated, turns lights off within 2 hours, and controls an area not exceeding 5,000 sq. ft. Exceptions are malls and arcades, auditoriums, single tenant retail stores, industrial facilities and arenas, where a captive key override is used. Override time may exceed 2 hours and the area controlled may not exceed 20,000 square feet.

Holiday scheduling

If an automatic time switch control device is installed, it shall have an automatic holiday scheduling feature that turns off all lights for at least 24 hours and then resumes normal operation. Exceptions are retail stores and malls, restaurants, grocery stores, churches and theaters.

Guest Rooms

A master switch is required at the entry of guest rooms in hotels, motels, or similar buildings that controls all permanently wired lights and switched receptacles, except those in the bathrooms.

Exit Signs

Internally illuminated exit signs shall not exceed 5 watts per side.

Tandem Wiring

Fluorescent lights with one or any odd numbered lamp configuration that are recessed–mounted within 10 feet (center-to-center) of each other or are pendant or surface mounted within 1 foot (edge-to-edge) of each other shall be tandem wired. Exceptions are lights on emergency circuits or where electronic high-frequency ballasts are used or lights are not available in pairs in the same area.

Interior Lighting Power (ILP) limits

COMCHECK™ will perform this analysis and is available at www.energycodes. gov.

The amount of lighting allowed in watts per square foot depends on the building or area type. Under the entire building method the interior power (in watts) is the value from Table 805.5.2 for the building type times the conditioned floor area of the entire building.

Under the tenant area or portion of building method, the total interior lighting power (ILP) in watts is the sum of all interior powers for all areas. The interior lighting power is the conditioned floor area for each area type times the value from Table 805.5.2. When this method is used, each area type shall be treated as a separate area.

Part of 2003 IECC Table 805.5.2 listed below.

Building or Area Type	Watts Per Sq. Ft. Entire Building	Tenant Area
Auditorium	N/A	1.8
Automotive Facility	0.9	N/A
Bank/Financial Institution	N/A	1.5
Classroom/Lecture Hall	N/A	1.4
Convention/Conference/Meeting	1.2	1.3
Corridor/Restroom/Support	N/A	0.9
Dining	N/A	0.9
Dormitory	1.0	N/A
Exercise Center	1.0	0.9
Exhibition Hall	N/A	1.3
Grocery Store	1.5	1.6
Hotel Function	1.0	1.3
Industrial Work, < 20-foot ceiling height	N/A	1.2
Industrial Work, ≥ 20 foot ceiling height	N/A	1.7
Kitchen	N/A	1.2
Library	1.3	1.7
Lobby - Hotel	N/A	1.1
Lobby - Other	N/A	1.3
Mail/Arcade/Atrium	N/A	0.6
Medical/Clinical Care	1.2	1.2
Motel	1.0	N/A
Multi-family	0.7	N/A
Office	1.0	1.1
Religious Worship	1.3	2.4
Restaurant	1.6	0.9
Retail/Sales, Wholesale Showroom	1.5	1.7
School	1.2	N/A
Storage - Commercial/Industrial	0.8	0.8
Theater - Motion Picture	1.2	1.2
Theater - Performance	1.6	2.6
Other	0.6	1.0

Footnotes for interior lighting power:

a. Where the lights are installed for decorative purposes, in addition to general lighting, up to 1 Watt per square foot (W/ft2) times the area that the lighting is in can be added to the ILP.

b. Where the lights are installed to meet requirements of visual display terminals, up to .35 W/ft2 times that area can be added to the ILP.

c. Where the lights are installed to highlight specific merchandise and are separately switched or dimmed from general lighting up to 1.6 W/ft2 times the area of specific display or 3.9 W/ft2 times the shelf area for selling fine merchandise can be added to the ILP.

d. Where the lights are installed in an emergency, recovery, medical supply and pharmacy space, 1 W/ft2 can be added to the ILP.

The total interior power limit should not include the following:

1. Specialized medical, dental and research lighting.
2. Professional sports arena playing field lighting.
3. Display lighting for exhibits in galleries, museums, and monuments.
4. Guestroom lighting in hotels, motels, boarding houses or similar buildings.
5. Emergency lighting automatically off during normal building operation.

Where the occupancy of the building is unknown, the lighting power density should be 1.5 Watts per square foot.

Determining Light Wattages

Screw Lamp Holders
The wattage shall be the maximum labeled wattage for the light.

Low Wattage Lighting
The wattage shall be the specified wattage of the transformer supplying the system.

Other Luminaries
The wattage of other lights shall be the wattage of the equipment furnished by the manufacturer or other approved sources.

Line-voltage Lighting Track and Plug-in Busway
The wattage shall be the greater of 30 watts per linear foot or total wattage luminaries on the track or busway.

Separate Meters for Electrical Energy Consumption
Buildings with individual dwelling units shall have separate electric meters for each tenant.

Exterior Lighting
Exterior lighting controls – Automatic switching or photocell controls that turn lights off during daylight hours shall be provided for all exterior lighting not intended for 24-hour operation. Automatic time switches shall have a combination seven day and seasonal daylight program schedule adjustment and a minimum 4–hour time clock power backup.

Exterior lighting level limits – All exterior lighting supplied through the building electrical service must have an efficacy of at least 45 lumens per watt. Examples of lighting sources meeting this requirement are: fluorescent, metal halide, high pressure sodium, and electrodeless induction lamps.

These requirements do not apply to lighting for: advertising signage, safety or security for health and safety requirements or low voltage landscaping.

2003 IECC Section 803

Mechanical Requirements – 2003 IECC Section 803.2 Simple HVAC Systems

2003 IECC Design Requirements 803.2.1

HVAC systems must be sized in accordance with procedures described in the ASHRAE Fundamentals Handbook or by an approved equivalent computation procedure using site-specific climate information. HVAC systems should not exceed that design. Equipment must meet the minimum efficiency requirements listed in 2003 IECC Table 803.2.2 (1-5)

Control Requirements 803.2.3.1

A thermostat is required for each zone, with thermostatic setback controls, controlled by either an automatic time clock or programmable control system, capable to setback zone temperatures down to 55 degrees F or up to 85 degrees F. Where humidification or dehumidification or both are provided at least one control should be provided for each system.

Air Economizer Systems 803.2.6

Integrated controlled economizers are required on all cooling systems with a total capacity of 65,000 Btu per hour or larger. Exceptions are residences, supermarkets or hotel/motel guest rooms.

Hydronic System Controls 803.3.3.7

Hydronic heating systems with multiple boilers designed to deliver conditioned water or steam into a common distribution system should have automatic controls capable of sequencing operation of boilers. Hydronic systems larger than 500,000 Btu/h input should have either a multistaged or modulating burner.

Hydronic systems greater than 299,999 Btu/h in design supplying heated or chilled water to comfort conditioning systems, should have the capacity to: 1) Automatically reset supply water temperature using building or zone return water temperatures or outside air temperatures as an indicator of building heating or cooling demand. The temperature shall be capable of being reset by at least 25% of the design supply–to–return water temperature difference; or 2) Reduce system pump flow by at least 50% of design.

Additional control requirements are listed in 2003 IECC Section 803.

Piping Insulation 803.3.7

All piping of HVAC systems should be insulated with from 1 to 2 inches of insulation depending on the pipe size and conveyed fluid. Piping within HVAC equipment and piping that conveys fluids between 55 F and 105 F do not need insulation.

Ventilation - Minimum Outdoor Air Requirements

Customarily, occupied spaces shall be provided with natural ventilation by means of openable exterior openings with an area not less than 4% of the total floor area or shall be provided with a mechanically operated ventilation system.

Mechanical ventilation requirements are listed in the International Mechanical Code, Chapter 4, Table 403.3.

Shutoff Damper Control

Outdoor air supply and exhaust ducts with greater than 3000 cfm of airflow shall have means to reduce and shut off airflow. Exceptions are systems with readily accessible manual dampers, continuously operating systems and when required for health and life safety codes.

Service Water Heating – 2003 IECC Section 804

Water-heating equipment and hot water storage tanks shall meet the requirement of 2003 IECC Table 804.2

Temperature Controls 804.3

Service water heating equipment shall have controls that allow a set point of 110 F (43C) for equipment serving dwelling units and 90 F (32C) for equipment serving other occupancies. The outlet temperature of lavatories in public facility rest rooms shall be limited to 110 F (43C).

Heat Traps 804.4

Water heating equipment without integral heat traps and serving non-circulating systems shall be provided with heat traps on both supply and discharge piping.

Pipe Insulation 804.5

Automatic-circulation hot water systems piping shall have 1 inch of insulation installed (R-3.5 minimum).

Non-circulating systems served by equipment without integral heat traps shall be insulated with .5 inch (R -1.75 minimum) for the first 8 feet of piping.

Hot water system controls 804.6

Automatic-circulation hot water system pumps or heat tracer tape shall turn off automatically or manually when the hot water system is not in use.

Envelope Requirements

COM*check-EZ* divides Montana into two climate zones (zones 15 and 16). A description of zones and Prescriptive Packages are shown on pages, 7, 8, 9, 10, and 11 of this summary.

Slabs on Grade

If slab edge insulation is required (Zone 15 with 10% or less window-to-wall ratio does not require slab edge insulation) insulation shall be placed on the outside or inside of the foundation wall. The insulation shall extend downward from the top of the slab for a minimum of 48 inches or downward to at least the bottom of the slab and then horizontally to the interior or exterior for a minimum total distance of 48 inches.

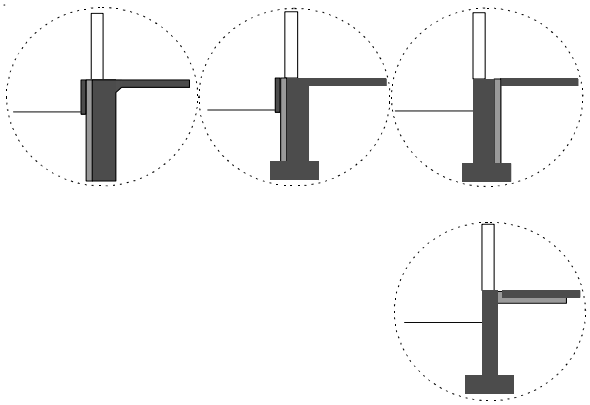

Skylights

Skylights should be limited to 3% of the gross roof area.

Glazing

Glazing units are listed in maximum U factors, a measurement of conductivity. The U factor is the inverse of the R factor. Example: an R factor of 2 would equal a U factor of 1/2 or .5. Most windows will have National Fenestration Rating Council (NFRC) labels listing U factor and Solar Heat Gain Coefficient (SHGC). Most manufacturers should have NFRC and SHGC information available. Default U factor and SHGC tables are listed in the 2003 IECC Table 102.5.2. The glazing unit should have a U factor and SHGC no higher (less efficient) than the listing. (U factor of .5 is better than a U factor of .6.) The solar heat gain co-efficient requirement depends upon the projection factor. The projection factor (PF) respresents the amount of the window that is shaded by the roof overhang. In the following diagram, the PF is the distance of roof over-hang (A) divided by the distance from the top of the wall to the bottom of the window (B).

The building envelope requirements (R-value and U-factor) depend on the amount of glazing in the building. Requirements are listed under window/wall ratio which is the gross window area divided by the gross wall area. The gross wall area includes the opaque area of all above-grade exterior walls, including the band joist and the area of all doors and windows. The gross window area includes the rough opening area of the windows, not just the transparent glass area.

Projection Factor (PF)

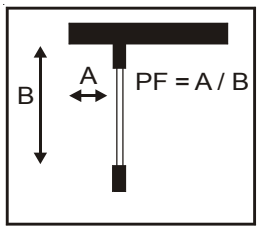

Insulation Requirements

“Cavity insulation” is the placement of insulation in cavities, such as spaces between framed walls, studs or floor joists. The insulation should fill all voids but not be compressed.

“Continuous insulation” differs from cavity insulation only in that it is placed over structural components rather than in cavities. Continuous insulation, when properly installed, is free of breaks, voids and compression.

Air sealing requirements 802.3.3

All joints and penetrations in the building envelope that are potential sources of air leakage must be caulked, gasketed, weather-stripped, or otherwise sealed in an approved manner.

The following areas must be sealed:

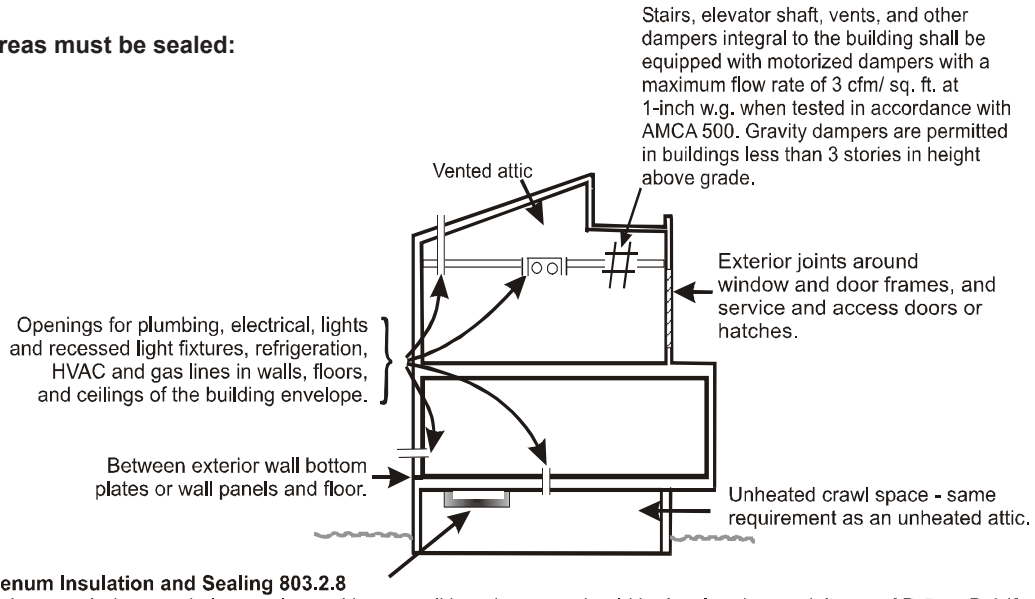

Duct and Plenum Insulation and Sealing 803.2.8

All supply and return air ducts and plenums located in unconditioned spaces should be insulated to a minimum of R-5, or R-8 if located outside the building. If located within the building, the duct shall be separated from the building exterior by a minimum of R-8. All joints, seams, and connections in the ductwork shall be securely fastened and sealed with welds, gaskets, mastics, or tapes. Tapes and mastics should be UL 181A or B listed. Unlisted duct tape is not permitted as a sealant on any metal ducts.

Insulation is not required on exhaust air ducts, ducts located within equipment, and in situations where the design temperature difference between the interior and exterior of the duct does not exceed 15 degrees F.

Recessed Lighting Requirements 802.3.7

When a recessed light is installed in a ceiling (with unheated attic space above), it must meet one of the following:

1. Type IC rated fixture with no openings into the attic, or sealed or gasketed to prevent air leakage into the attic.

2. Type IC or non-IC rated and installed inside a sealed 1/2 inch gypsum wallboard, or other airtight assembly manufactured for this purpose with clearances of at least 1/2 inch from combustible material and at least 3 inches from insulation material.

3. Type IC rated and labeled in accordance with ASTM E 283 allowing no more than 2 cubic feet per minute (CFM) of air movement from the conditioned space to the ceiling cavity when tested at 1.57 psi (75 Pa.).

Vapor Retarders 802.1.2

Vapor retarders (poly sheeting, vapor barrier paint, etc.) must be installed in all nonvented framed areas in ceilings, walls and floors. Nonvented areas are framed cavities without vents or other openings to allow for free air movement. The vapor retarder must have a permeability (perm) rating of 1.0 or less and must be installed on the warm-in-winter side of the insulation.

Vestibules Requirement 802.3.6

A vestibule enclosure is required at exterior doors opening into any space larger than 3,000 square feet. All doors leading into and out of vestibules shall be equipped with self-closing devices. Vestibules are not required on revolving doors, dwelling and guest room doors, doors that are not building entrances, such as doors to equipment rooms, vehicular or material movement and adjacent personnel doors.

Loading Dock Weatherseals 802.3.5

Cargo and loading dock doors shall be equipped with weather seals to restrict infiltration when vehicles are parked in the doorway.

MONTANA

Zone	County
15	Beaverhead
15	Big Horn
16	Blaine
15	Broadwater
15	Carbon
15	Carter
15	Cascade
15	Chouteau
15	Custer
16	Daniels
15	Dawson
16	Deer Lodge
15	Fallon
15	Fergus
16	Flathead
15	Gallatin
15	Garfield
16	Glacier
15	Golden Valley
16	Granite
16	Hill
15	Jefferson
15	Judith Basin
15	Lake
15	Lewis And Clark
16	Liberty
15	Lincoln
15	Madison
15	Mccone
15	Meagher
15	Mineral
15	Missoula
15	Musselshell
15	Park
15	Petroleum
16	Phillips
16	Pondera
15	Powder River
16	Powell
15	Prairie
15	Ravalli
15	Richland
16	Roosevelt
15	Rosebud
15	Sanders
16	Sheridan
16	Silver Bow
15	Stillwater
15	Sweet Grass
15	Teton
16	Toole
15	Treasure
16	Valley
15	Wheatland
15	Wibaux
15	Yellowstone
15	Yellowstone National Park

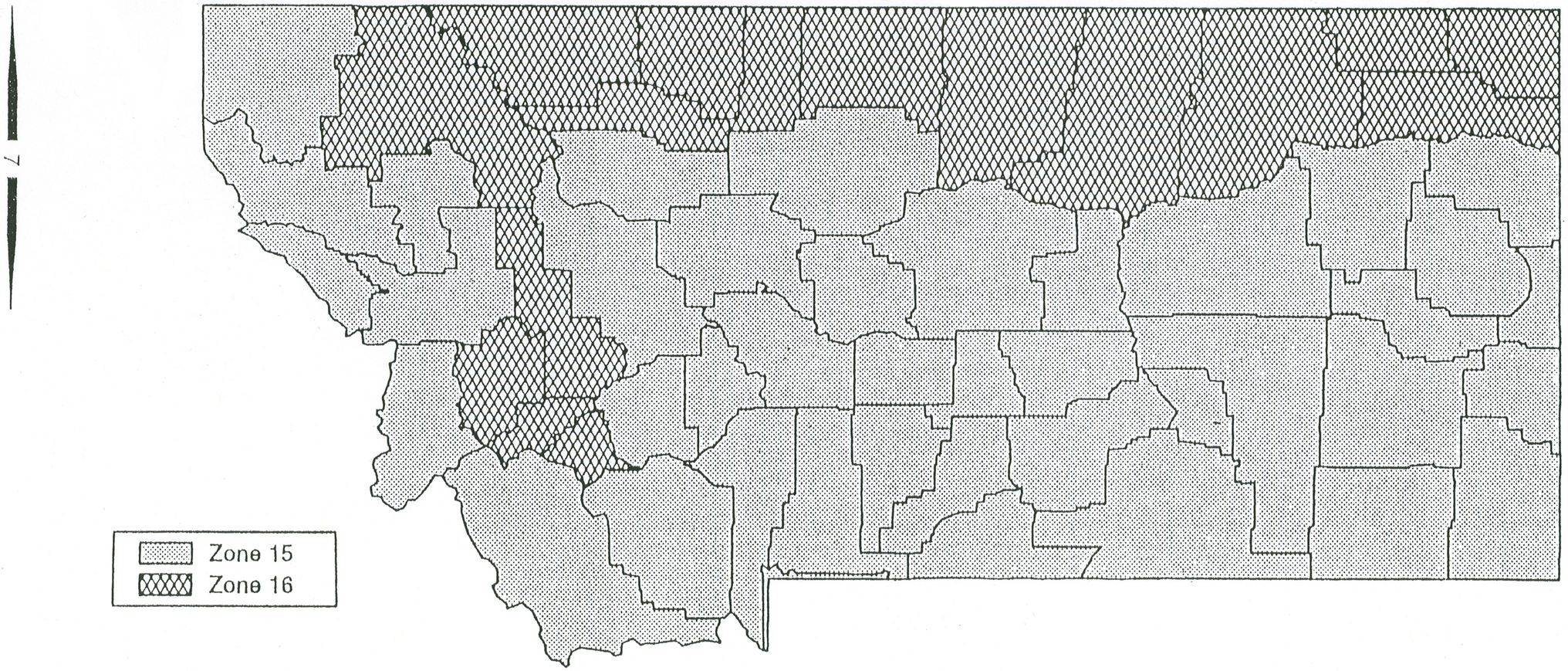

TABLE 802.2(33)
BUILDING ENVELOPE REQUIREMENTS[a through e] - CLIMATE ZONE 15

WINDOW AND GLAZED DOOR AREA 10 PERCENT OR LESS OF ABOVE-GRADE WALL AREA			
ELEMENT	CONDITION/VALUE		
Skylights (*U*-factor)	0.6		
Slab or below-grade wall (*R*-value)	R-0		
Windows and glass doors	SHGC	*U*-factor	
PF < 0.25	Any	0.7	
0.25 ≤ PF < 0.50	Any	0.7	
PF ≥ 0.50	Any	0.7	
Roof assemblies (*R*-value)	Insulation between framing	Continuous insulation	
All-wood joist/truss	R-25	R-19	
Metal joist/truss	R-25	R-20	
Concrete slab or deck	NA	R-19	
Metal purlin with thermal block	R-30	R-20	
Metal purlin without thermal block	X	R-20	
Floors over outdoor air or unconditioned space (*R*-value)	Insulation between framing	Continuous insulation	
All-wood joist/truss	R-25	R-22	
Metal joist/truss	R-30	R-23	
Concrete slab or deck	NA	R-22	
Above-grade walls (*R*-value)	No framing	Metal framing	Wood framing
Framed			
R-value cavity	NA	R-13	R-11
R-value continuous	NA	R-3	R-0
CMU, ≥ 8 inches, with integral insulation			
R-value cavity	NA	R-11	R-11
R-value continuous	R-5	R-0	R-0
Other masonry walls			
R-value cavity	NA	R-11	R-11
R-value continuous	R-5	R-0	R-0

WINDOW AND GLAZED DOOR AREA GREATER THAN 10 PERCENT BUT NOT GREATER THAN 25 PERCENT OF ABOVE-GRADE WALL AREA			
ELEMENT	CONDITION/VALUE		
Skylights (*U*-factor)	0.6		
Slab or below-grade wall (*R*-value)	R-8		
Windows and glass doors	SHGC	*U*-factor	
PF < 0.25	0.5	0.5	
0.25 ≤ PF < 0.50	0.6	0.5	
PF ≥ 0.50	0.7	0.5	
Roof assemblies (*R*-value)	Insulation between framing	Continuous insulation	
All-wood joist/truss	R-25	R-19	
Metal joist/truss	R-25	R-20	
Concrete slab or deck	NA	R-19	
Metal purlin with thermal block	R-30	R-20	
Metal purlin without thermal block	X	R-20	
Floors over outdoor air or unconditioned space (*R*-value)	Insulation between framing	Continuous insulation	
All-wood joist/truss	R-25	R-22	
Metal joist/truss	R-30	R-23	
Concrete slab or deck	NA	R-22	
Above-grade walls (*R*-value)	No framing	Metal framing	Wood framing
Framed			
R-value cavity	NA	R-13	R-11
R-value continuous	NA	R-3	R-0
CMU, ≥ 8 inches, with integral insulation			
R-value cavity	NA	R-11	R-11
R-value continuous	R-5	R-0	R-0
Other masonry walls			
R-value cavity	NA	R-11	R-11
R-value continuous	R-5	R-0	R-0

(continued)

TABLE 802.2(33)—continued
BUILDING ENVELOPE REQUIREMENTS[a through e] - CLIMATE ZONE 15

WINDOW AND GLAZED DOOR AREA GREATER THAN 25 PERCENT BUT NOT GREATER THAN 40 PERCENT OF ABOVE-GRADE WALL AREA			
ELEMENT	CONDITION/VALUE		
Skylights (*U*-factor)	0.6		
Slab or below-grade wall (*R*-value)	R-8		
Windows and glass doors	SHGC	*U*-factor	
PF < 0.25	0.5	0.4	
0.25 ≤ PF < 0.50	0.6	0.4	
PF ≥ 0.50	0.7	0.4	
Roof assemblies (*R*-value)	Insulation between framing	Continuous insulation	
All-wood joist/truss	R-30	R-23	
Metal joist/truss	R-30	R-24	
Concrete slab or deck	NA	R-23	
Metal purlin with thermal block	X	R-24	
Metal purlin without thermal block	X	R-24	
Floors over outdoor air or unconditioned space (*R*-value)	Insulation between framing	Continuous insulation	
All-wood joist/truss	R-25	R-22	
Metal joist/truss	R-30	R-23	
Concrete slab or deck	NA	R-22	
Above-grade walls (*R*-value)	No framing	Metal framing	Wood framing
Framed			
R-value cavity	NA	R-13	R-11
R-value continuous	NA	R-3	R-0
CMU, ≥ 8 inches, with integral insulation			
R-value cavity	NA	R-11	R-11
R-value continuous	R-5	R-0	R-0
Other masonry walls			
R-value cavity	NA	R-13	R-11
R-value continuous	R-6	R-0	R-0

WINDOW AND GLAZED DOOR AREA GREATER THAN 40 PERCENT BUT NOT GREATER THAN 50 PERCENT OF ABOVE-GRADE WALL AREA			
ELEMENT	CONDITION/VALUE		
Skylights (*U*-factor)	0.6		
Slab or below-grade wall (*R*-value)	R-8		
Windows and glass doors	SHGC	*U*-factor	
PF < 0.25	0.4	0.4	
0.25 ≤ PF < 0.50	0.5	0.4	
PF ≥ 0.50	0.7	0.4	
Roof assemblies (*R*-value)	Insulation between framing	Continuous insulation	
All-wood joist/truss	R-30	R-23	
Metal joist/truss	R-30	R-24	
Concrete slab or deck	NA	R-23	
Metal purlin with thermal block	R-38	R-24	
Metal purlin without thermal block	X	R-24	
Floors over outdoor air or unconditioned space (*R*-value)	Insulation between framing	Continuous insulation	
All-wood joist/truss	R-25	R-22	
Metal joist/truss	R-30	R-23	
Concrete slab or deck	NA	R-22	
Above-grade walls (*R*-value)	No framing	Metal framing	Wood framing
Framed			
R-value cavity	NA	R-13	R-13
R-value continuous	NA	R-7	R-4
CMU, ≥ 8 inches, with integral insulation			
R-value cavity	NA	R-13	R-11
R-value continuous	R-5	R-0	R-0
Other masonry walls			
R-value cavity	NA	R-13	R-11
R-value continuous	R-6	R-3	R-0

For SI: 1 inch = 25.4 mm.

a. Values from Tables 802.2(5) through 802.2(37) shall be used for the purpose of the completion of Tables 802.2(1) through 802.2(4), as applicable based on window and glazed door area.

b. "NA" indicates the condition is not applicable.

c. An *R*-value of zero indicates no insulation is required.

d. "Any" indicates any available product will comply.

e. "X" indicates no complying option exists for this condition.

TABLE 802.2(34)
BUILDING ENVELOPE REQUIREMENTS[a through e] - CLIMATE ZONE 16

WINDOW AND GLAZED DOOR AREA 10 PERCENT OR LESS OF ABOVE-GRADE WALL AREA			
ELEMENT	CONDITION/VALUE		
Skylights (*U*-factor)	0.6		
Slab or below-grade wall (*R*-value)	R-8		
Windows and glass doors	SHGC	*U*-factor	
PF < 0.25	0.7	0.6	
0.25 ≤ PF < 0.50	Any	0.6	
PF ≥ 0.50	Any	0.6	
Roof assemblies (*R*-value)	Insulation between framing	Continuous insulation	
All-wood joist/truss	R-25	R-19	
Metal joist/truss	R-25	R-20	
Concrete slab or deck	NA	R-19	
Metal purlin with thermal block	R-30	R-20	
Metal purlin without thermal block	X	R-20	
Floors over outdoor air or unconditioned space (*R*-value)	Insulation between framing	Continuous insulation	
All-wood joist/truss	R-25	R-22	
Metal joist/truss	R-30	R-23	
Concrete slab or deck	NA	R-22	
Above-grade walls (*R*-value)	No framing	Metal framing	Wood framing
Framed			
R-value cavity	NA	R-13	R-11
R-value continuous	NA	R-3	R-0
CMU, ≥ 8 inches, with integral insulation			
R-value cavity	NA	R-11	R-11
R-value continuous	R-5	R-0	R-0
Other masonry walls			
R-value cavity	NA	R-11	R-11
R-value continuous	R-5	R-0	R-0

WINDOW AND GLAZED DOOR AREA GREATER THAN 10 PERCENT BUT NOT GREATER THAN 25 PERCENT OF ABOVE-GRADE WALL AREA			
ELEMENT	CONDITION/VALUE		
Skylights (*U*-factor)	0.6		
Slab or below-grade wall (*R*-value)	R-8		
Windows and glass doors	SHGC	*U*-factor	
PF < 0.25	0.7	0.5	
0.25 ≤ PF < 0.50	Any	0.5	
PF ≥ 0.50	Any	0.5	
Roof assemblies (*R*-value)	Insulation between framing	Continuous insulation	
All-wood joist/truss	R-30	R-23	
Metal joist/truss	R-30	R-24	
Concrete slab or deck	NA	R-23	
Metal purlin with thermal block	X	R-24	
Metal purlin without thermal block	X	R-24	
Floors over outdoor air or unconditioned space (*R*-value)	Insulation between framing	Continuous insulation	
All-wood joist/truss	R-25	R-22	
Metal joist/truss	R-30	R-23	
Concrete slab or deck	NA	R-22	
Above-grade walls (*R*-value)	No framing	Metal framing	Wood framing
Framed			
R-value cavity	NA	R-13	R-11
R-value continuous	NA	R-3	R-0
CMU, ≥ 8 inches, with integral insulation			
R-value cavity	NA	R-11	R-11
R-value continuous	R-5	R-0	R-0
Other masonry walls			
R-value cavity	NA	R-13	R-11
R-value continuous	R-9	R-3	R-0

(continued)

TABLE 802.2(34)—continued
BUILDING ENVELOPE REQUIREMENTS[a through e] - CLIMATE ZONE 16

WINDOW AND GLAZED DOOR AREA GREATER THAN 25 PERCENT BUT NOT GREATER THAN 40 PERCENT OF ABOVE-GRADE WALL AREA			
ELEMENT	CONDITION/VALUE		
Skylights (*U*-factor)	0.6		
Slab or below-grade wall (*R*-value)	R-8		
Windows and glass doors	SHGC	*U*-factor	
PF < 0.25	0.5	0.4	
0.25 ≤ PF < 0.50	0.6	0.4	
PF ≥ 0.50	0.7	0.4	
Roof assemblies (*R*-value)	Insulation between framing	Continuous insulation	
All-wood joist/truss	R-30	R-23	
Metal joist/truss	R-30	R-24	
Concrete slab or deck	NA	R-23	
Metal purlin with thermal block	X	R-24	
Metal purlin without thermal block	X	R-24	
Floors over outdoor air or unconditioned space (*R*-value)	Insulation between framing	Continuous insulation	
All-wood joist/truss	R-25	R-22	
Metal joist/truss	R-30	R-23	
Concrete slab or deck	NA	R-22	
Above-grade walls (*R*-value)	No framing	Metal framing	Wood framing
Framed			
R-value cavity	NA	R-13	R-13
R-value continuous	NA	R-3	R-0
CMU, ≥ 8 inches, with integral insulation			
R-value cavity	NA	R-13	R-11
R-value continuous	R-6	R-0	R-0
Other masonry walls			
R-value cavity	NA	R-13	R-13
R-value continuous	R-9	R-3	R-0

WINDOW AND GLAZED DOOR AREA GREATER THAN 40 PERCENT BUT NOT GREATER THAN 50 PERCENT OF ABOVE-GRADE WALL AREA			
ELEMENT	CONDITION/VALUE		
Skylights (*U*-factor)	0.6		
Slab or below-grade wall (*R*-value)	R-8		
Windows and glass doors	SHGC	*U*-factor	
PF < 0.25	0.4	0.4	
0.25 ≤ PF < 0.50	0.5	0.4	
PF ≥ 0.50	0.7	0.4	
Roof assemblies (*R*-value)	Insulation between framing	Continuous insulation	
All-wood joist/truss	R-30	R-23	
Metal joist/truss	R-30	R-24	
Concrete slab or deck	NA	R-23	
Metal purlin with thermal block	R-38	R-24	
Metal purlin without thermal block	X	R-24	
Floors over outdoor air or unconditioned space (*R*-value)	Insulation between framing	Continuous insulation	
All-wood joist/truss	R-25	R-22	
Metal joist/truss	R-30	R-23	
Concrete slab or deck	NA	R-22	
Above-grade walls (*R*-value)	No framing	Metal framing	Wood framing
Framed			
R-value cavity	NA	R-13	R-13
R-value continuous	NA	R-14	R-7
CMU, ≥ 8 inches, with integral insulation			
R-value cavity	NA	R-13	R-13
R-value continuous	R-10	R-3	R-0
Other masonry walls			
R-value cavity	NA	R-13	R-13
R-value continuous	R-9	R-3	R-3

For SI: 1 inch = 25.4 mm.

a. Values from Tables 802.2(5) through 802.2(37) shall be used for the purpose of the completion of Tables 802.2(1) through 802.2(4), as applicable based on window and glazed door area.

b. "NA" indicates the condition is not applicable.

c. An *R*-value of zero indicates no insulation is required.

d. "Any" indicates any available product will comply.

e. "X" indicates no complying option exists for this condition.