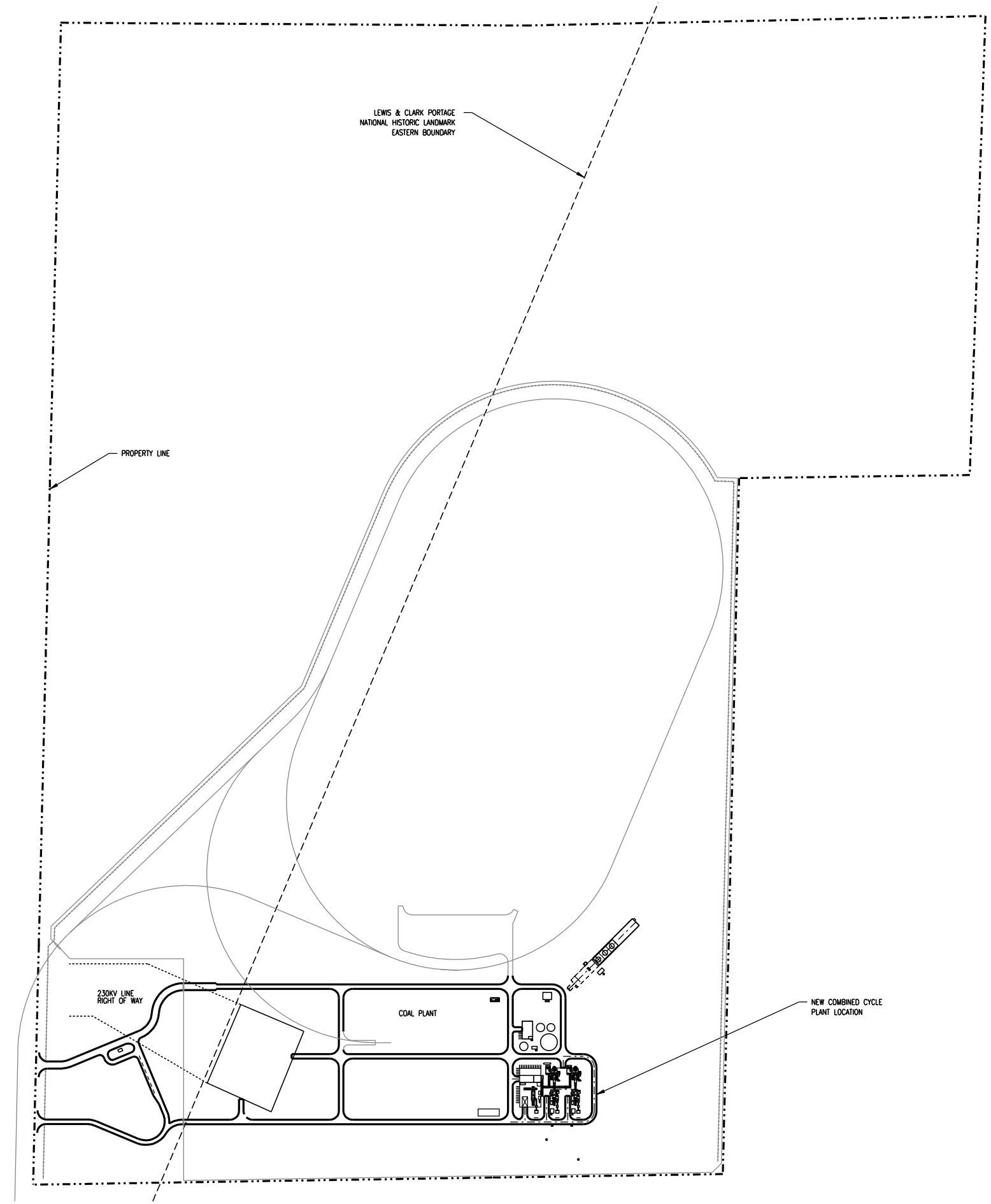

PRELIMINARY ISSUE FOR REVIEW
NOT FOR CONSTRUCTION 04/15/09

NO.	REVISIONS	DSGN	CHKD	APVD	DATE

Stanley Consultants INC.
9200 East Mineral Avenue, Suite 400, Englewood, Colorado 80112-3416
www.stanleyconsultants.com

SME
Electric Generation & Transmission Cooperative, Inc.

HIGHWOOD GENERATING STATION
COMBINED CYCLE PLANT
GREAT FALLS, MONTANA

GENERAL ARRANGEMENT
OVERALL SITE PLAN
AIR PERMIT

DESIGNED	C. MOORE
DRAWN	M. McGINNIS
CHECKED	M. PAYNE
APPROVED	
APPROVED	K. CAVANAUGH
DATE	04/15/09

SCALE: 1" = 250'-0"
PROJ._NO. 21920
REV.
SK90-102

© STANLEY CONSULTANTS